hansgrohe

AR تعليمات التجميع

EN assembly instructions

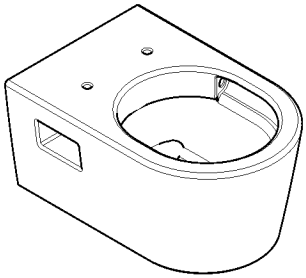

CapeTide S 540/360
60142456 / 62016456

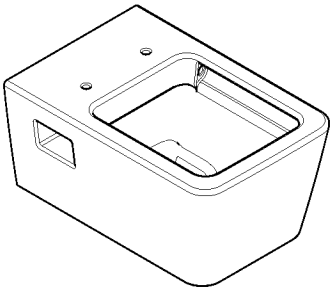

CapeTide Q 540/360
60145456 / 62018456

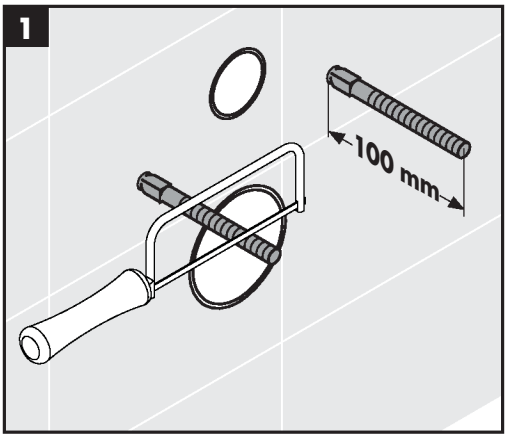
1
100 mm

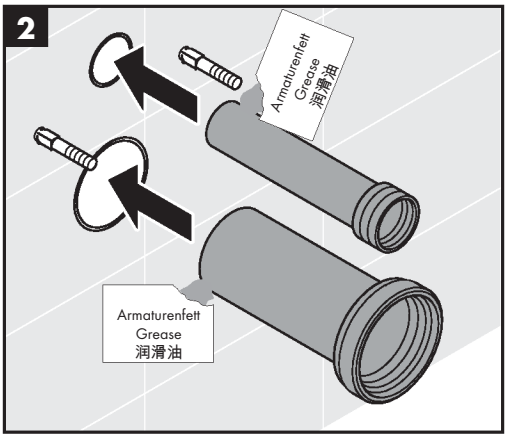
2
Armaturenfett
Grease
润滑油
Armaturenfett
Grease
润滑油

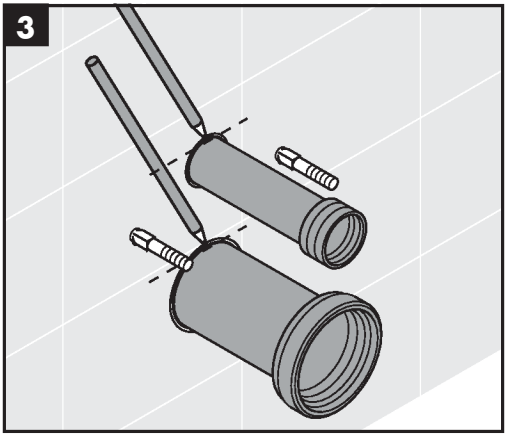
3

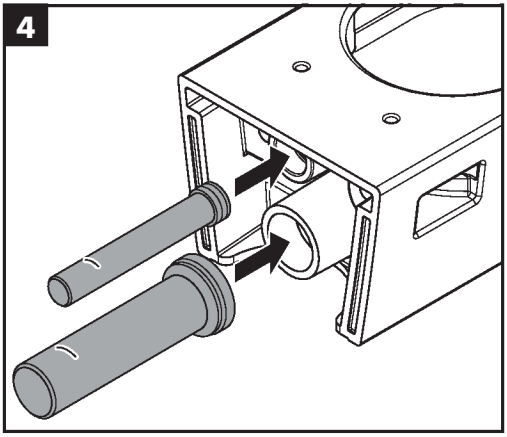
4

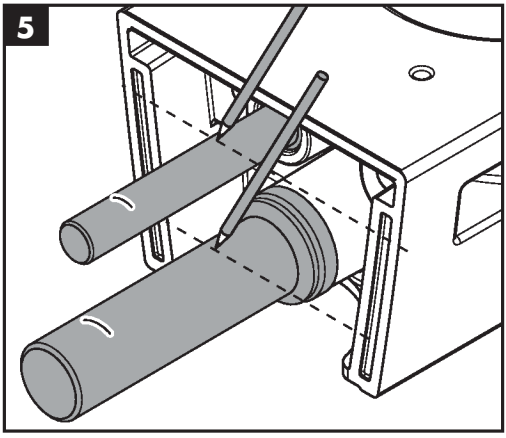
5

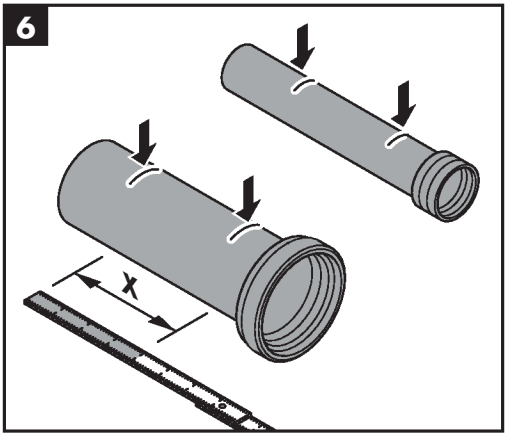
6
X

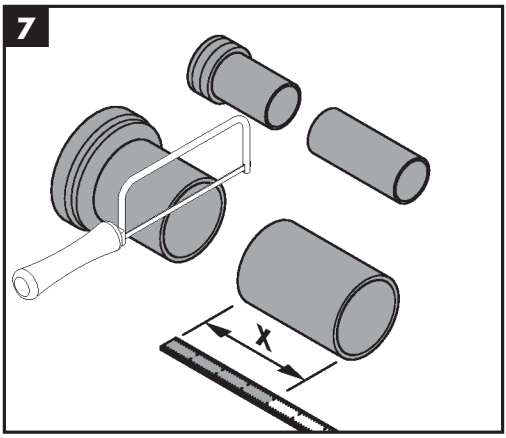
7
X

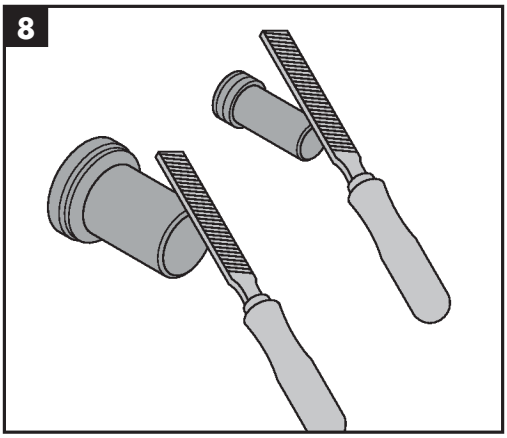
8

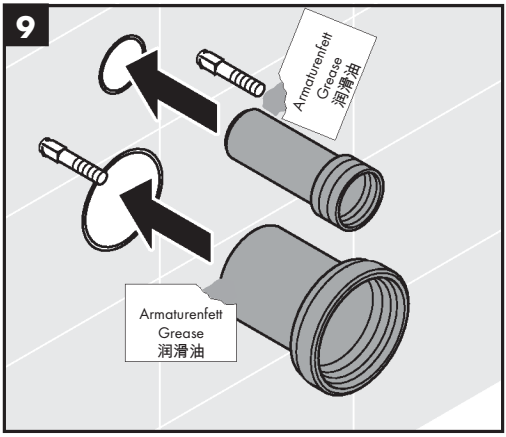
9
Armaturenfett
Grease
润滑油
Armaturenfett
Grease
润滑油

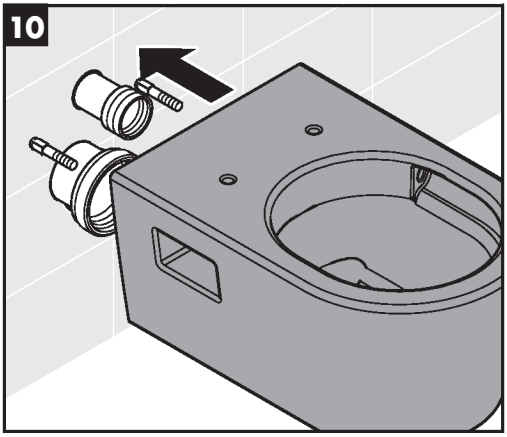
10

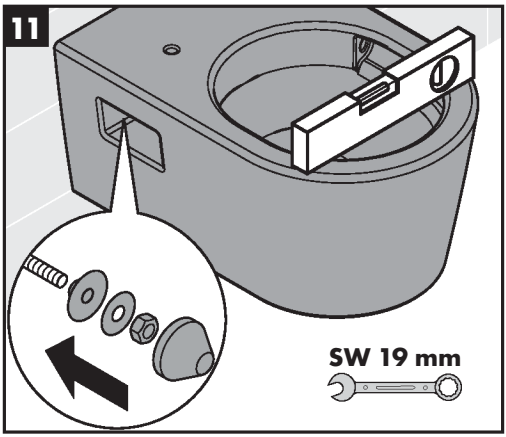
11
SW 19 mm

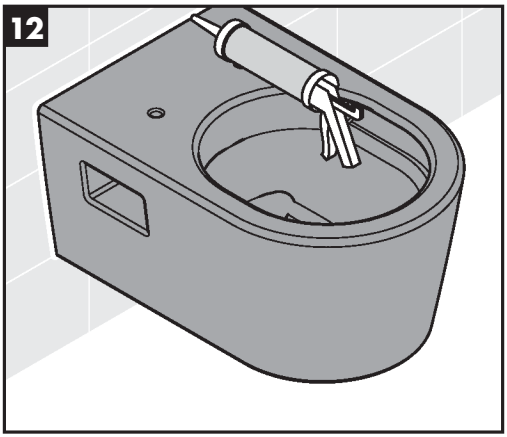
12

CapeTide S 540/360
60142456 / 62016456

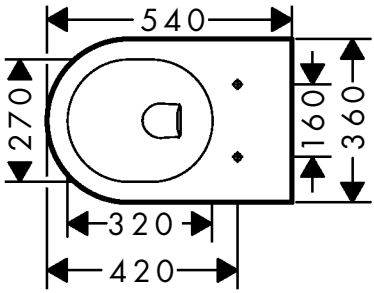

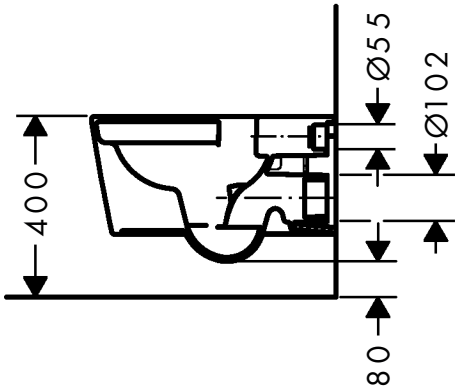

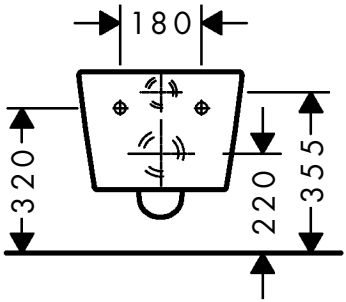

CapeTide Q 540/360
60145456 / 62018456

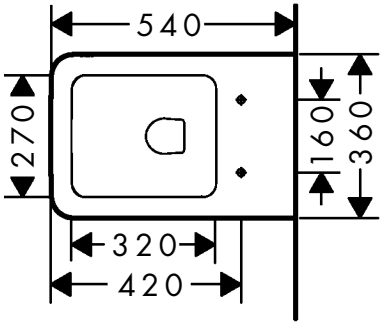

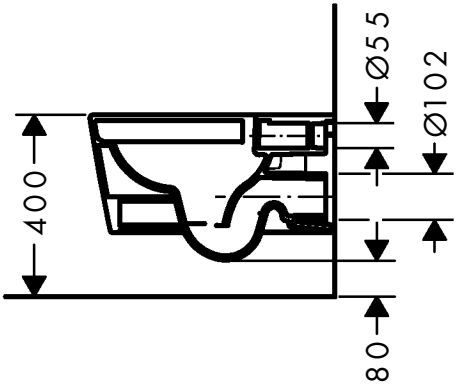

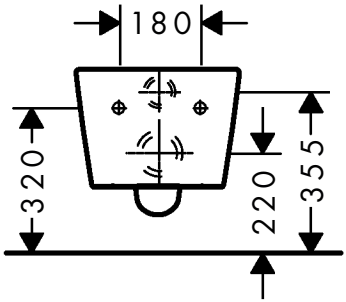

CapeTide S 540/360
60142456 / 62016456

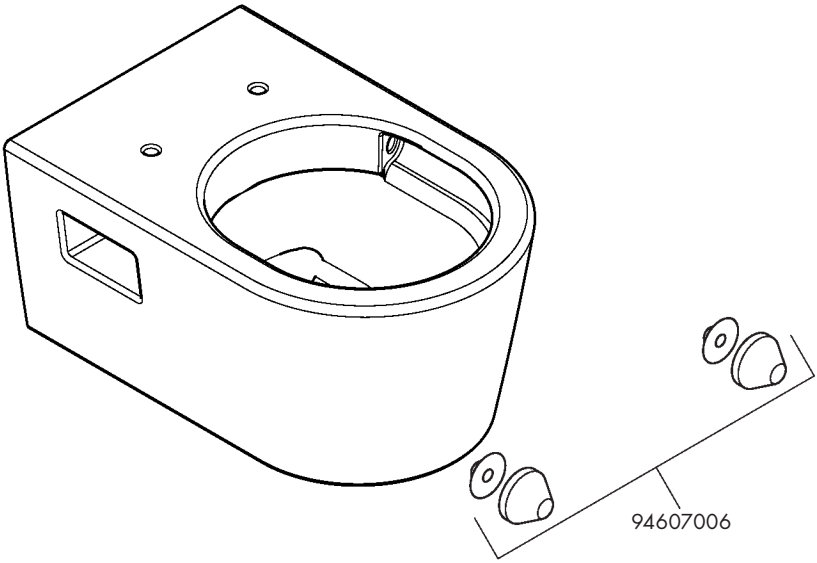

CapeTide Q 540/360
60145456 / 62018456

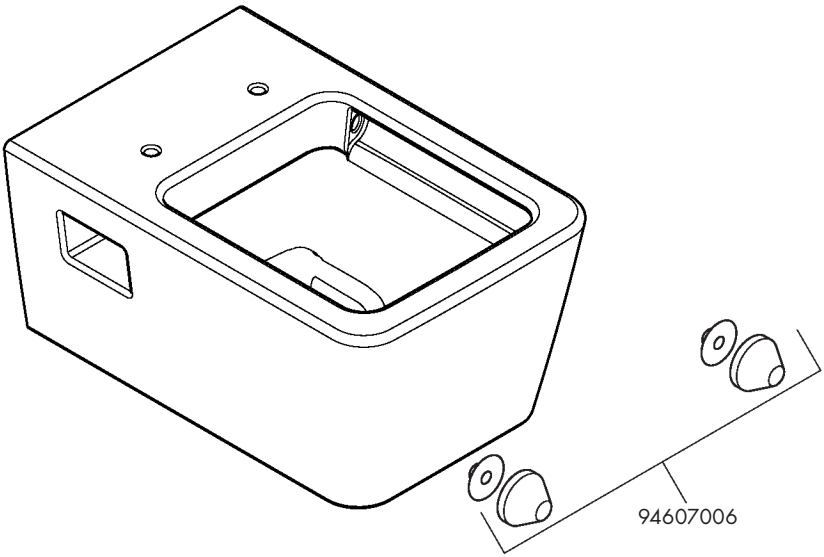

www.hansgrohe.com/
cleaning-recommendation

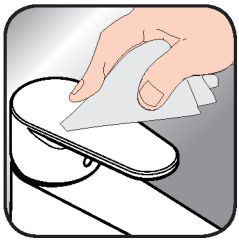

www.hansgrohe.com/
cleaning-recommendation



www.hansgrohe.com/
cleaning-recommendation



www.hansgrohe.com/
cleaning-recommendation

AR توصيات التنظيف / الضمان / اتصال

EN Cleaning recommendation / Warranty / Contact