hansgrohe

EN Installation / User Instructions / Warranty
FR Instructions de montage / Mode d'emploi / Garantie
ES Instrucciones de montaje / Manejo / Garantía

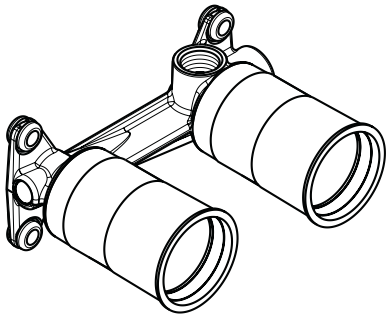

13622181

English

Technical Information

Water pressure	
Recommended	15 - 75 PSI (0.1 - 0.5 MPa)
Maximum	145 PSI (1 MPa)
Hot water temp.	
Recommended	120°-140° F (48° - 60° C)*
Maximum	158°F (70° C)*

* Please know and follow all applicable local plumbing codes when setting the temperature on the water heater.

Installation Considerations

- For best results, Hansgrohe recommends that this unit be installed by a licensed, professional plumber.
- Know and follow all applicable local plumbing codes when installing this faucet. Pay special attention to the required air gap between the end of the spout and the top of the lavatory.
- Please read over these instructions thoroughly before beginning installation. Make sure that you have all tools and supplies needed to complete the installation.
- Keep this booklet and the receipt (or other proof of date and place of purchase) for this product in a safe place. The receipt is required should it be necessary to request warranty parts.

Français

Données techniques

Pression d'eau	
recommandée	15 - 75 PSI (0.1 - 0.5 MPa)
maximum	145 PSI (1 MPa)
Température d'eau chaude	
recommandée	120°-140° F (48° - 60° C)*
maximum	158°F (70° C)*

* Vous devez connaître et respecter tous les codes de plomberie locaux applicables pour le réglage de la température du chauffe-eau.

À prendre en considération pour l'installation

- Pour de meilleurs résultats, Hansgrohe recommande que ce produit soit installé par un plombier professionnel licencié.
- Vous devez connaître et respecter tous les codes de plomberie locaux applicables en installant ce robinet.
- Veuillez lire attentivement ces instructions avant de procéder à l'installation. Assurez-vous de disposer de tous les outils et du matériel nécessaires pour l'installation.
- Conservez ce livret et le reçu (ou une autre preuve sur laquelle figurent la date et l'endroit de l'achat) pour ce produit dans un endroit sûr. Le reçu est requis si vous commandez des pièces sous garantie.

Datos tecnicos

Presión en servicio	
recomendada	15 - 75 PSI (0.1 - 0.5 MPa)
max.	145 PSI (1 MPa)
Temperatura del agua caliente	
recomendada	120°-140° F (48° - 60° C)*
max.	158°F (70° C)*

* Debe conocer y cumplir todos los códigos locales aplicables para ajustar la temperatura del calentador de agua.

Consideraciones para la instalación

- Para obtener mejores resultados, la instalación debe estar a cargo de un plomero profesional matriculado.
- Antes de comenzar la instalación, lea estas instrucciones detenidamente. Asegúrese de tener las herramientas y los insumos necesarios para completar la instalación.
- Debe conocer y cumplir todos los códigos locales aplicables al instalar este chorro.
- Mantenga este folleto y el recibo (u otro comprobante del lugar y fecha de compra) de este producto en lugar seguro. El recibo se requiere en caso de ser necesario solicitar piezas bajo garantía.

Tools Required / Outils Requis / Herramientas Útiles

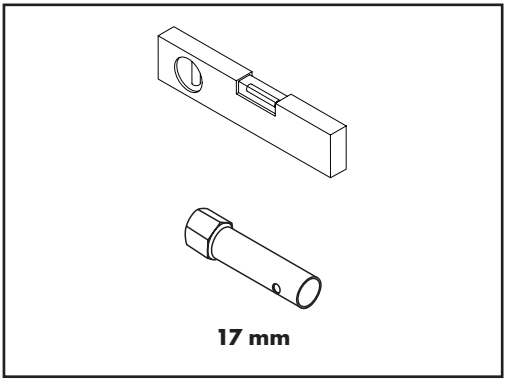

13622181

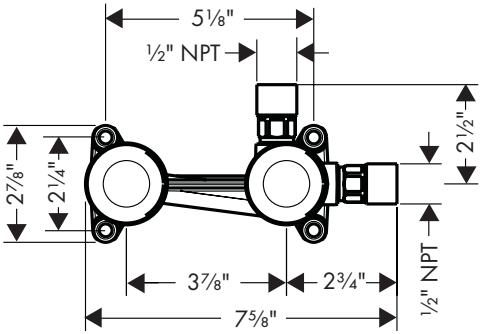

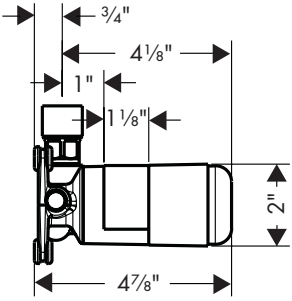

Trim kits (not included) / Robinetterie (ne pas inclus) / Piezas Exteriores (no incluidos)

AXOR Citterio 39116xx1

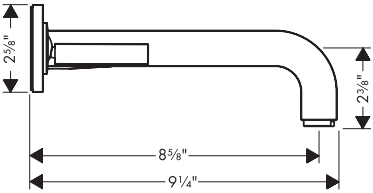

AXOR Citterio M 34116xx1

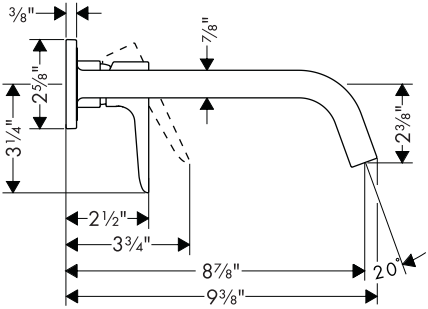

AXOR Citterio E 36106xx1

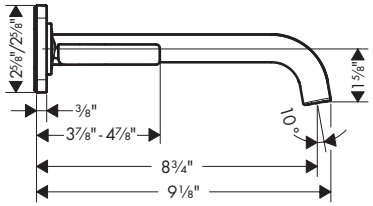

AXOR Citterio E 36114xx1

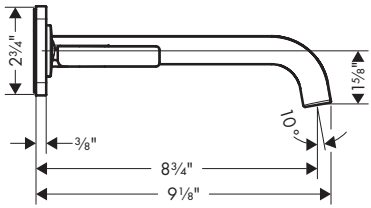

AXOR Uno 38118xx1

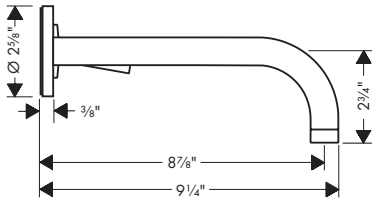

AXOR MyEdition 47060xx1, 47062xx1

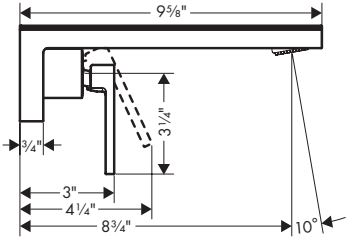

Metris S 31163xx1

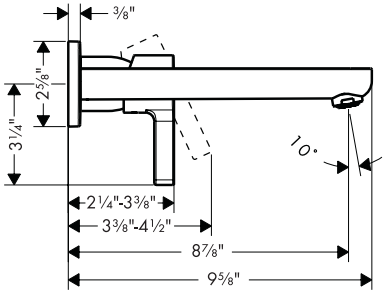

Metris 31086xx1

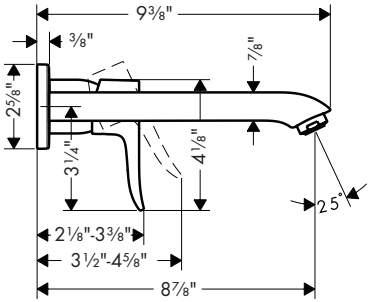

Talis S 72111xx1

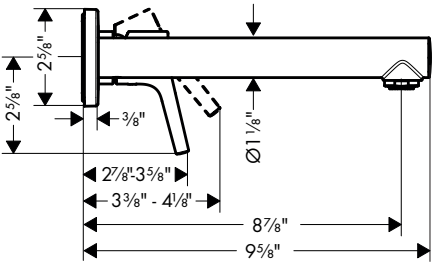

Talis E 1734xx1

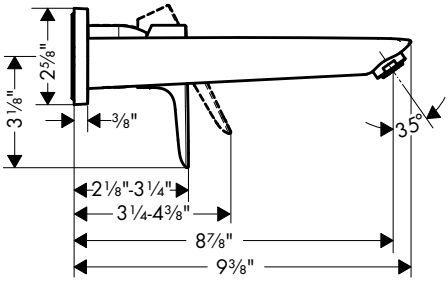

Metropol 32526XX1

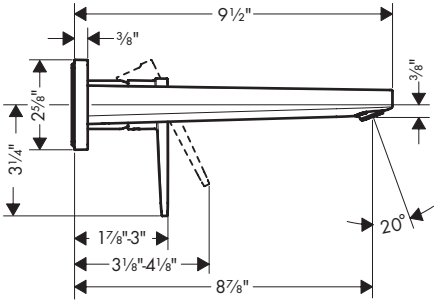

Metropol 74526XX1

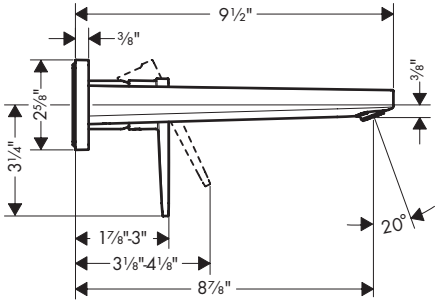

Suggested Installations / Suggestions d'installation / Sugerencias de instalación

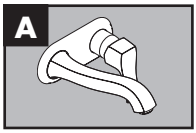

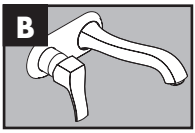

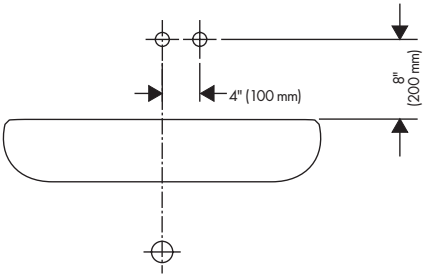

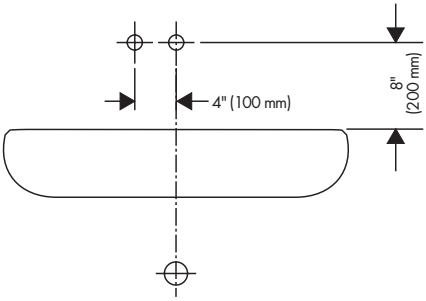

Important! / Avis! / Aviso!

Before installation, decide whether the faucet will have the handle on the right (view A) or the left (view B).

⚠ **The orientation of the rough cannot be easily changed after installation.**

Avant de commencer l'installation, décidez si le robinet doit avoir la poignée à droite (vue A) ou à gauche (vue B).

⚠ **L'orientation de la pièce est difficile à modifier après l'installation.**

Antes de la instalación, decida si el grifo tendrá la manija a la derecha (gráfico A) o a la izquierda (gráfico B).

⚠ **La orientación de la pieza interior no se puede cambiar fácilmente luego de la instalación.**

Installation / Installation / Instalación

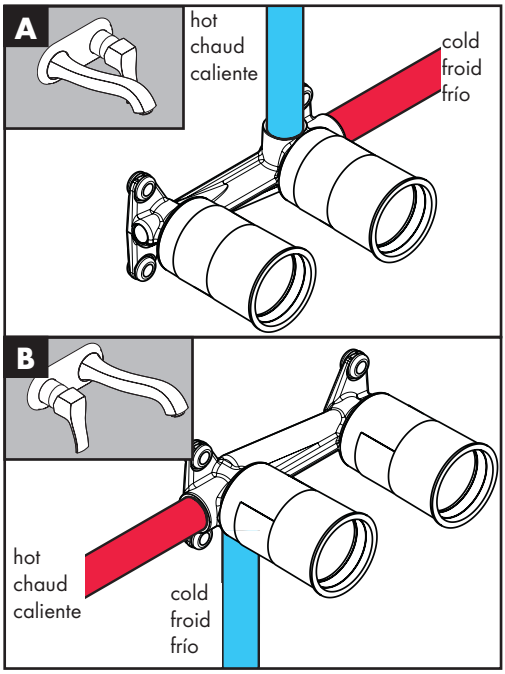

Install the hot and cold supply lines according to the diagram corresponding to the desired installation.

Installez les conduites d'alimentation de l'eau chaude et l'eau froide en consultant le schéma correspondant à l'installation souhaitée.

Instale las tuberías de suministro de agua caliente y fría de acuerdo al diagrama correspondiente a la instalación deseada.

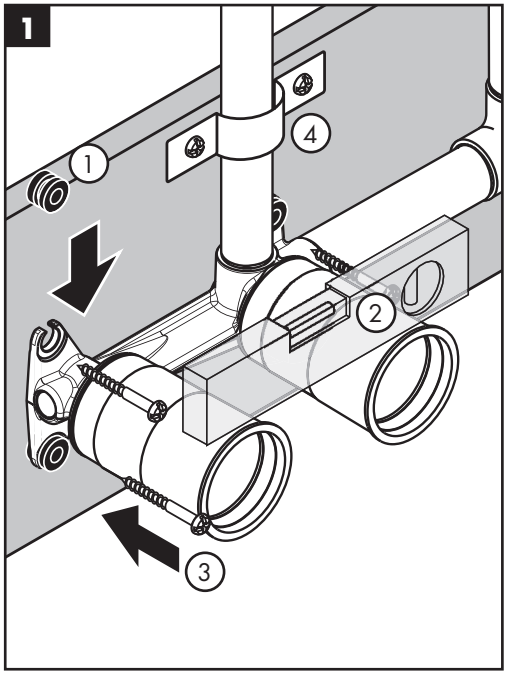

Install the noise reducers.

Make sure that the rough is level.

Screw the valve to a header board (screws not included).

Firmly secure the supply lines according to accepted plumbing practices.

Installez les atténuateurs de bruit.

Assurez-vous que la pièce est au niveau.

Vissez la vanne à un panneau (vis non fournies).

Fixez bien les conduites d'alimentation en vous conformant aux pratiques de plomberie appropriées.

Instale los reductores de ruido.

Asegúrese de que la pieza interior quede nivelada.

Atornille la válvula al panel de cabezal (los tornillos no están incluidos).

Ajuste firmemente las tuberías de suministro de acuerdo con las prácticas de plomería aceptadas.

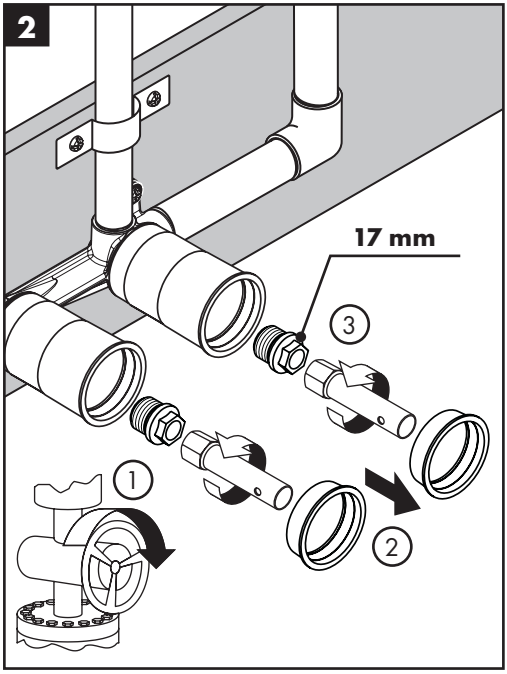

Turn the water off at the main.

Remove the caps.

Remove the plugs.

Fermez l'eau à la valve principale.

Retirez les capuchons.

Retirez les bouchons.

Cierre el paso del agua en la entrada del suministro.

Retire las tapas.

Retire los tapones.

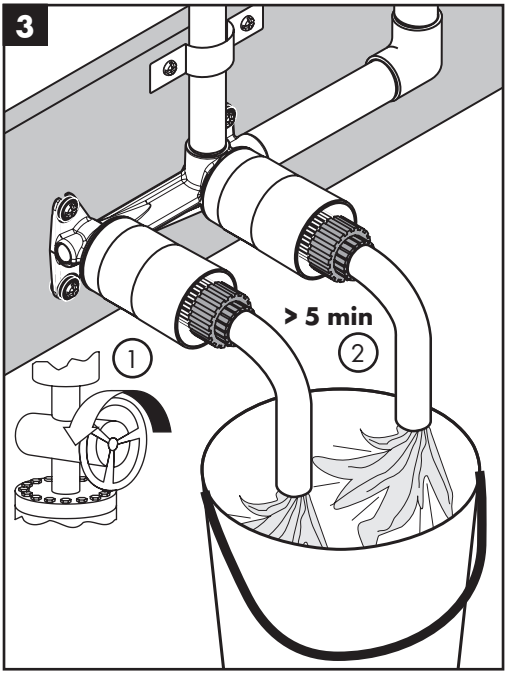

Connect hoses to the handle and spout ports.

Turn the water on at the main.

Flush the hot and cold supplies for at least 5 minutes.

Raccordez des tuyaux aux orifices d'écoulement et de poignée.

Ouvrez l'eau à la valve principale.

Rincez les conduites d'alimentation de l'eau chaude et de l'eau froide.

Conecte las mangueras a la manija y a los orificios de los surtidores.

Abra el paso del agua en la entrada del suministro.

Lave los suministros de agua caliente y fría

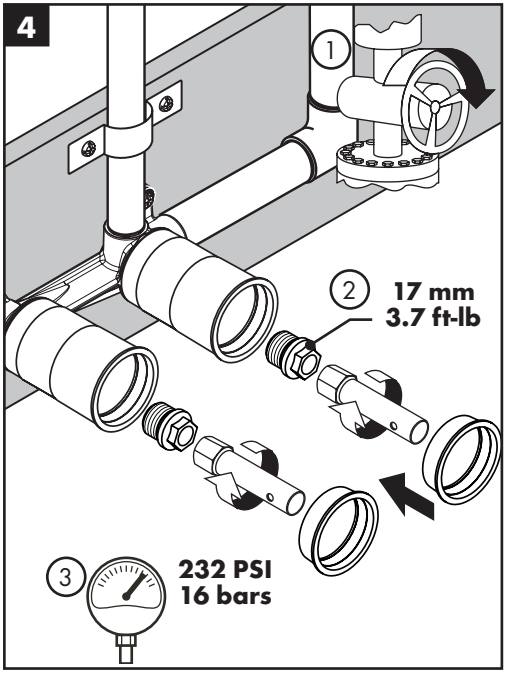

Turn the water off at the main.

Replace the plugs.

Replace the caps.

Pressure test the unit.

Fermez l'eau à la valve principale.

Remettez les bouchons en place.

Remettez les capuchons en place.

Testez la pression du produit.

Cierre el paso del agua en la entrada del suministro.

Reemplace los tapones.

Reemplace las tapas.

Realice una prueba de presión de la unidad.

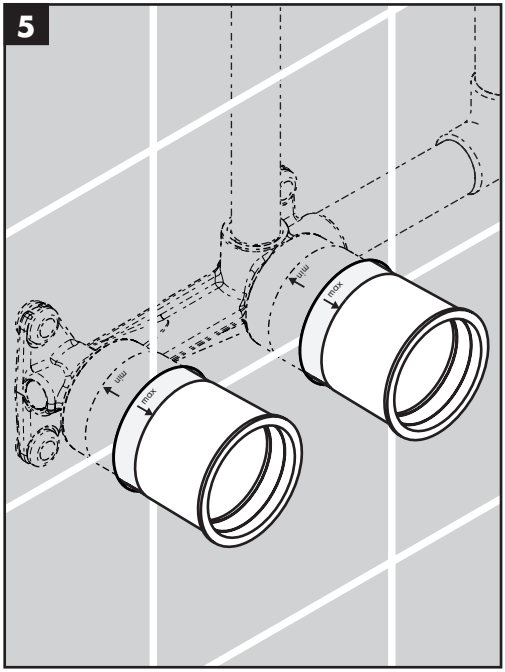

Install the finished wall.

For correct fit of the trim, the surface of the finished wall must fall between the "min" and "max" markings on the plaster shields.

Installez le mur fini.

Pour que la garniture s'ajuste de façon adéquate, la surface du mur fini doit se situer entre les marques « min » et « max » figurant sur les protecteurs de plâtre.

Instale la pared terminada.

Para que la pieza exterior ajuste correctamente, la superficie de la pared terminada debe quedar entre las marcas de máximo y mínimo del escudo de yeso.

Replacement Parts / Pièces détachées / Repuestos

13622181

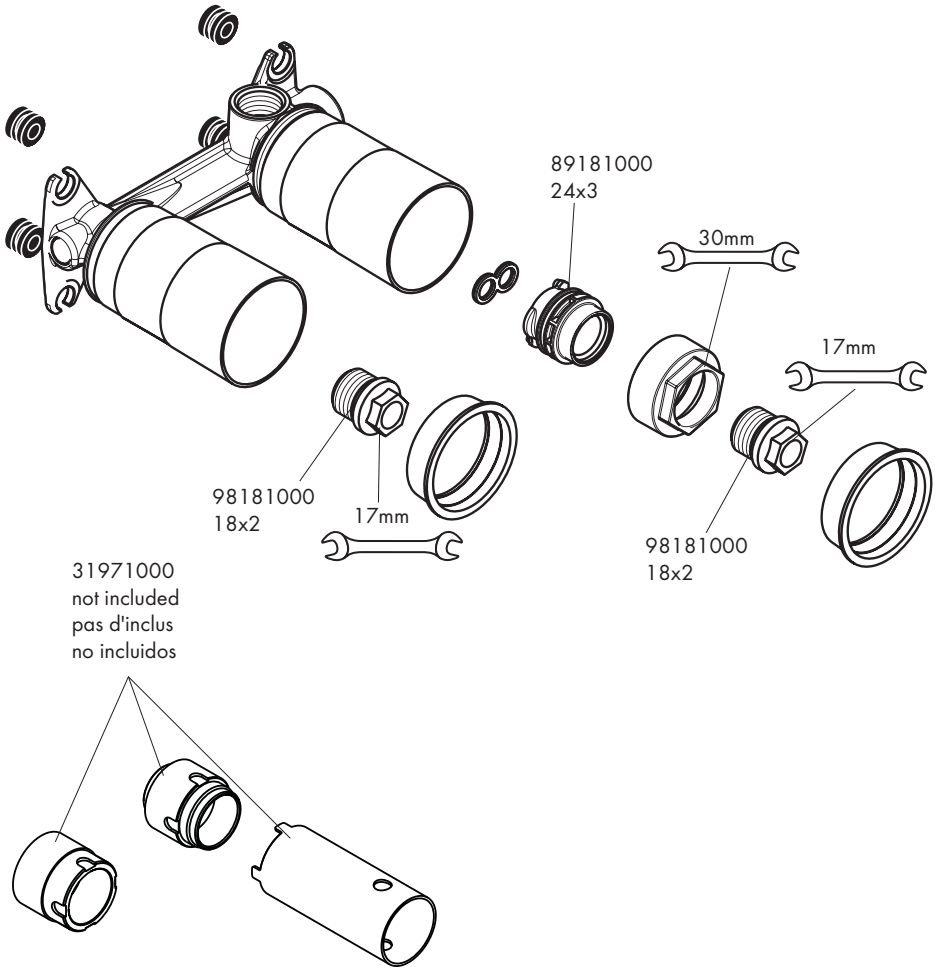

Hansgrohe, Inc. Limited Warranty

Offering our customers the highest quality at all times is a fundamental part of the Hansgrohe, Inc. company philosophy. We offer consumers a limited warranty on our hansgrohe® and AXOR® branded products.

This warranty is limited to products manufactured by Hansgrohe, Inc. that are purchased from a Hansgrohe, Inc. authorized seller by a consumer in the United States or Canada after September 1, 2019, and installed in either the United States or in Canada.

WARRANTY

Hansgrohe, Inc. warrants to the original consumer purchaser that hansgrohe and AXOR products will be free from defects in material and workmanship for as long as the original consumer purchaser owns both the product and the home in which the product was originally installed. For commercial purchasers, the warranty period is (a) one (1) year for hansgrohe products and (b) five (5) years for AXOR products, in each case from the date of purchase. The warranty period for products in the Rubbed Bronze, Matte Black and Matte White finishes are three (3) years from the date of purchase. This warranty is non-transferable.

WHAT WE WILL DO

Hansgrohe, Inc., at its option, will replace any product or part of the product that proves defective in workmanship and/ or material, under normal installation, use, service and maintenance. If Hansgrohe, Inc. is unable to provide a replacement part or product and repair is not practical or cannot be made in timely fashion, Hansgrohe, Inc. may elect to refund the purchase price in exchange for the return of the defective product. REPAIR OR REPLACEMENT (OR, IN LIMITED CIRCUMSTANCES, REFUND OF THE PURCHASE PRICE) AS PROVIDED UNDER THIS LIMITED WARRANTY IS THE EXCLUSIVE REMEDY OF THE PURCHASER.

WHAT IS NOT COVERED BY THE WARRANTY

Because Hansgrohe, Inc. is unable to control the quality of hansgrohe or AXOR products sold by unauthorized sellers, unless otherwise prohibited by law, this warranty does not cover hansgrohe or AXOR products purchased from unauthorized sellers. Authorized sellers can be found on hansgrohe and AXOR branded websites.

Labor and other expenses for disconnection, deinstallation, or return of the product for warranty service (including but not limited to proper packaging and shipping costs), or for installation or reinstallation of the product are not covered by this warranty.

Hansgrohe, Inc. shall not be liable for any damage to the product resulting from

- reasonable wear and tear
- outdoor use
- misuse (including use of the product for an unintended application)
- freezing water
- excessive water pressure
- pipe corrosion in the home in which the product is installed
- abuse, neglect or improper or incorrectly performed installation, maintenance or repair, including the use of abrasive or caustic cleaning agents or "no-rinse" cleaning products.

This warranty does not cover: (i) accessories, connected materials and products, or related products not manufactured by Hansgrohe, Inc. (ii) any hansgrohe or AXOR product sold for display purposes or (iii) hansgrohe or AXOR products purchased from unauthorized sellers.

WHAT YOU MUST DO TO OBTAIN WARRANTY SERVICE OR INFORMATION

Contact your retailer, or contact Technical Service at:

Hansgrohe, Inc.
1492 Bluegrass Lakes Parkway
Alpharetta, GA 30004
Toll-free 800 -334- 0455

In requesting warranty service, you will need to provide:

1. The sales receipt or other evidence of the date and place of purchase.
2. A description of the problem.
3. Delivery of the product or the defective part, postage prepaid and carefully packed and insured, to:

Hansgrohe, Inc.
1492 Bluegrass Lakes Parkway
Alpharetta, GA 30004
Toll-free 800 -334- 0455

When warranty service is completed, any repaired or replacement product or part will be returned to you postage prepaid.

REVISED SEPTEMBER 1, 2019.

Limitation on Duration of Implied Warranties: Some States do not allow limitations on how long an implied warranty lasts, so the below limitations may not apply to you. TO THE MAXIMUM EXTENT PERMITTED BY APPLICABLE LAW, ANY IMPLIED WARRANTY, INCLUDING THE IMPLIED WARRANTIES OF MERCHANTABILITY AND OF FITNESS FOR A PARTICULAR PURPOSE, IS LIMITED TO THE STATUTORY PERIOD OR THE DURATION OF THIS WARRANTY, WHICHEVER IS SHORTER.

Limitation of Special, Incidental or Consequential Damages: Some States do not allow the exclusion or limitation of incidental or consequential damages, so the below limitations and exclusions may not apply to you. TO THE MAXIMUM EXTENT PERMITTED BY APPLICABLE LAW, THIS WARRANTY DOES NOT COVER, AND HANSGROHE, INC. SHALL NOT BE LIABLE FOR, ANY SPECIAL, INCIDENTAL OR CONSEQUENTIAL DAMAGES (INCLUDING LABOR CHARGES TO REPAIR, REPLACE, INSTALL OR REMOVE THIS PRODUCT), WHETHER ARISING OUT OF BREACH OF ANY EXPRESS OR IMPLIED WARRANTY, BREACH OF CONTRACT, TORT, OR OTHERWISE. HANSGROHE, INC. SHALL NOT BE LIABLE FOR ANY DAMAGE TO THE PRODUCT RESULTING

FROM REASONABLE WEAR AND TEAR, OUTDOOR USE, MISUSE (INCLUDING USE OF THE PRODUCT FOR AN UNINTENDED APPLICATION), FREEZING WATER, EXCESSIVE WATER PRESSURE, PIPE CORROSION IN THE HOME IN WHICH THE PRODUCT IS INSTALLED, ABUSE, NEGLECT OR IMPROPER OR INCORRECTLY PERFORMED INSTALLATION, MAINTENANCE OR REPAIR, INCLUDING THE USE OF ABRASIVE OR CAUSTIC CLEANING AGENTS OR "NO-RINSE" CLEANING PRODUCTS.

Notice to residents of the State of New Jersey: The provisions of this warranty, including its limitations, are intended to apply to the fullest extent permitted by the laws of the State of New Jersey.

This warranty gives you specific legal rights, and you may also have other rights which vary from state to state.

PRODUCT INSTRUCTIONS AND QUESTIONS

Upon purchase or prior to installation, please carefully inspect your product for any damage or visible defect. Prior to installing, always carefully study the enclosed instructions on the proper installation and the care and maintenance of this product.

If you have questions at any time about the use, installation or performance of your product, or the Limited Warranty, please write us or call us toll-free at 800 -334- 0455.

hansgrohe

Hansgrohe, Inc. 1490 Bluegrass Lakes Parkway Alpharetta, GA 30004
Tel. 800-334-0455 Fax 770-889-1783

www.hansgrohe-usa.com

US - Installation Instructions • Part No. 90107921 • Revised 03/2022