hansgrohe

ZH 用户手册 / 组装说明 2

EN Instructions for use / assembly instructions 3

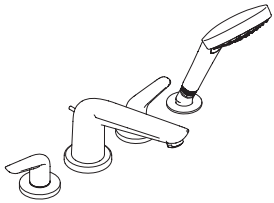

Novus
71333007

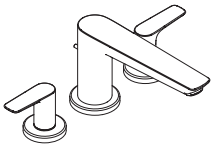

Talis E
71747007

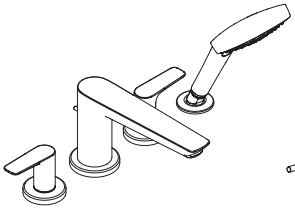

Talis E
71748XX7

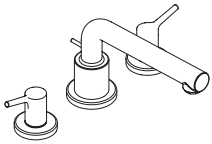

Talis S
72415007

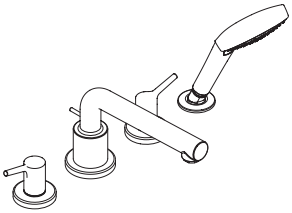

Talis S
72419007

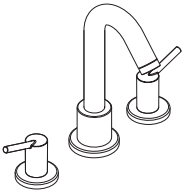

Talis S
32313007

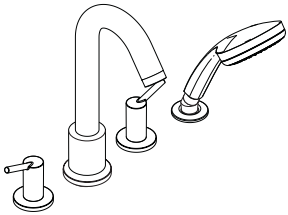

Talis S
32314007

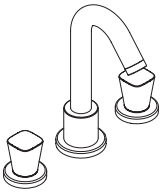

Logis
71300007

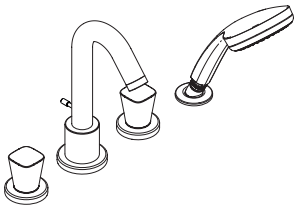

Logis
71314007

Metris S
31443007 / 31447007

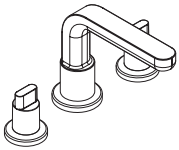

Metris S
31436007

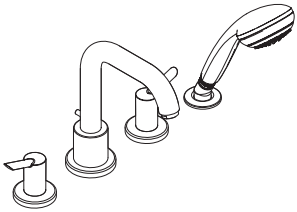

Focus S
31758007

⚠ 安全技巧

⚠ 装配时为避免挤压和切割受伤，必须戴上手套。

⚠ 本产品只允许作为洗浴、卫生和洁身之用。

⚠ 必须避免让身体敏感部位 (如眼睛) 接触到莲蓬头喷水。必须保持莲蓬头与人头之间有足够的距离。

⚠ 该产品不得作扶柄使用。必须安装单独的扶柄。

⚠ 冷热水管间过大的压力差必须予以平衡。

安装提示

- 安装前必须检查产品是否受到运输损害。 安装后将不认可运输损害或表面损伤。
- 管道和阀门必须根据通用标准进行安装、冲洗和检查。
- 请遵守当地国家现行的安装规定。

技术参数

工作压强:	最大 1 MPa
推荐工作压强:	0,1 - 0,5 MPa
测试压强:	1,6 MPa
	(1 MPa = 10 bar = 147 PSI)
热水温度:	最大 60°C
热力消毒:	最大 70°C / 4 分钟

- 该产品专为饮用水设计！
- 自动防止回流

符号说明

请勿使用含有乙酸的硅胶！

大小 (参见第页 13)

流量示意图 (参见第页 17)

① 手持花洒
② 浴缸出水口

备用零件 (参见第页 18)

XX = 颜色代码
00 = 镀铬
14 = Brushed Bronze
34 = Brushed Black Chrome
40 = 白色/镀铬
67 = Matt Black
70 = Matt White
99 = Polished Gold-Optic

清洗 (参见第页 10)

操作 (参见第页 9)

安装 (参见第页 4)

Safety Notes

⚠ Gloves should be worn during installation to prevent crushing and cutting injuries.

⚠ The product may only be used for bathing, hygienic and body cleaning purposes.

⚠ Do not allow the streams of the shower touch sensitive body parts (such as your eyes). An adequate distance must be kept between the shower and you.

⚠ The product may not be used as a holding handle. A separate handle must be installed.

⚠ The hot and cold supplies must be of equal pressures.

Installation Instructions

- Prior to installation, inspect the product for transport damages. After it has been installed, no transport or surface damage will be honoured.
- The pipes and the fixture must be installed, flushed and tested as per the applicable standards.
- The plumbing codes applicable in the respective countries must be observed.

Technical Data

Operating pressure:	max. 1 MPa
Recommended operating pressure:	0,1 - 0,5 MPa
Test pressure:	1,6 MPa
	(1 MPa = 10 bar = 147 PSI)
Hot water temperature:	max. 60°C
Thermal disinfection:	max. 70°C / 4 min

- The product is exclusively designed for drinking water!
- Safety against backflow

Symbol description

Do not use silicone containing acetic acid!

Dimensions (see page 13)

Flow diagram (see page 17)

① Hand shower
② Bath Spout

Spare parts (see page 18)

XX = Colors
00 = Chrome Plated
14 = Brushed Bronze
34 = Brushed Black Chrome
40 = White/Chrome Plated
67 = Matt Black
70 = Matt White
99 = Polished Gold-Optic

Cleaning (see page 10)

Operation (see page 9)

Assembly (see page 4)

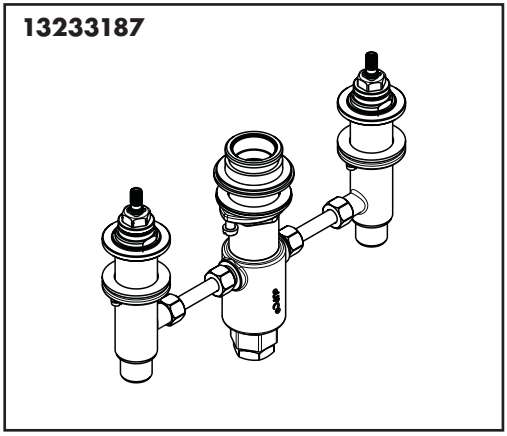
13233187

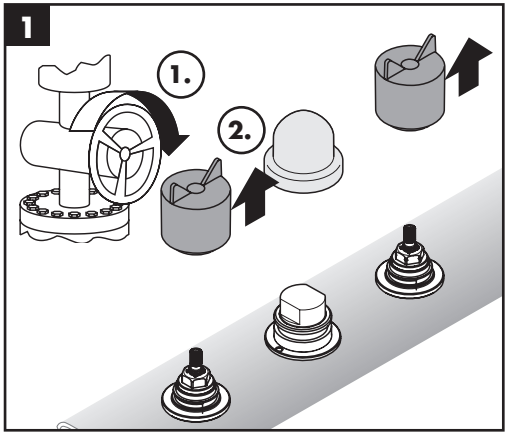
1
1.
2.

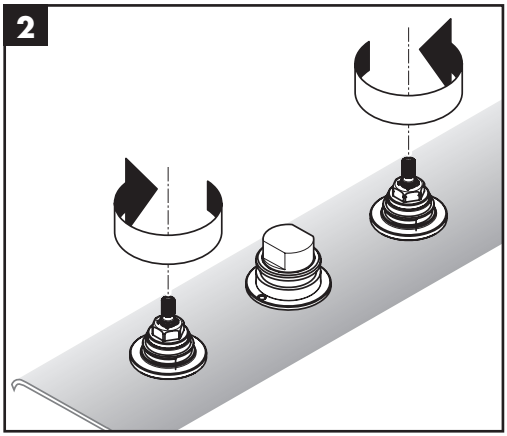
2

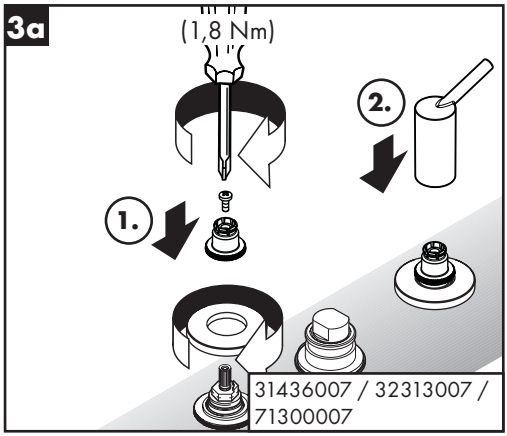
3a
(1,8 Nm)
1.
2.
31436007 / 32313007 /
71300007

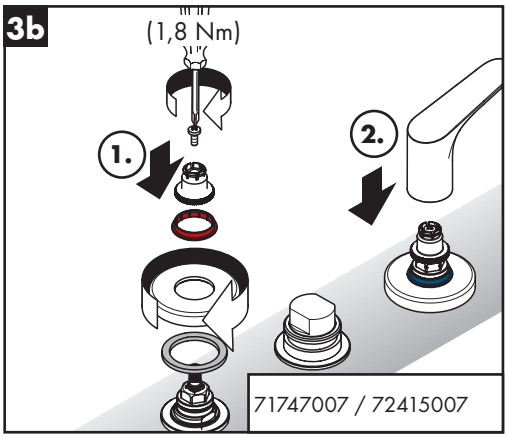
3b
(1,8 Nm)
1.
2.
71747007 / 72415007

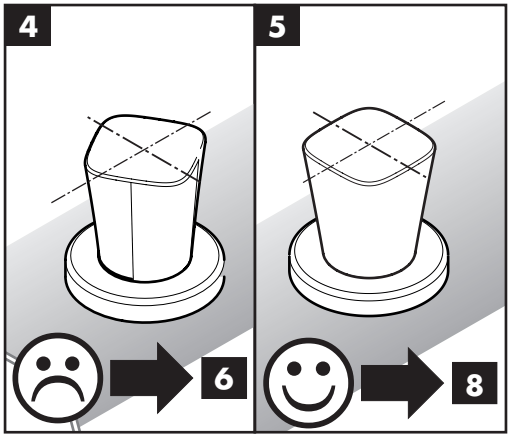
4
6
5
8

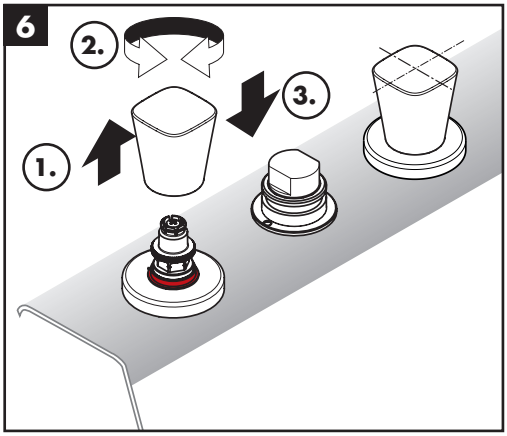
6
2.
3.
1.

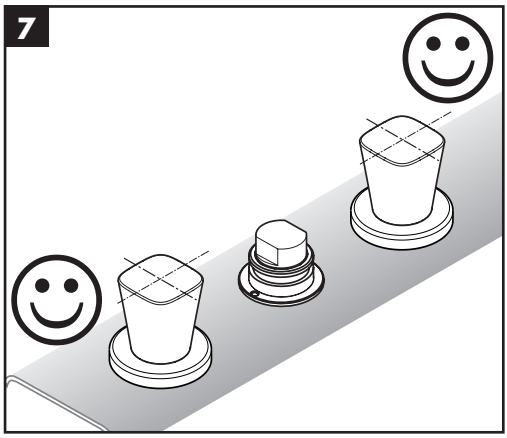
7

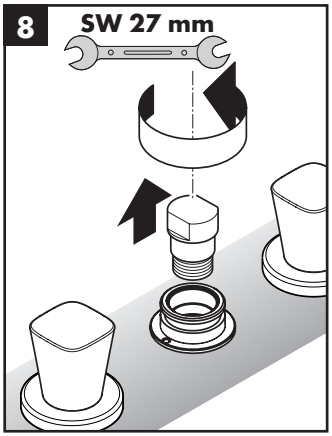
8
SW 27 mm

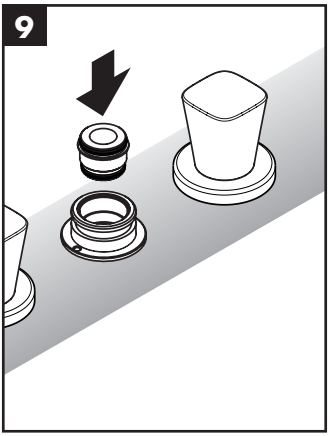
9

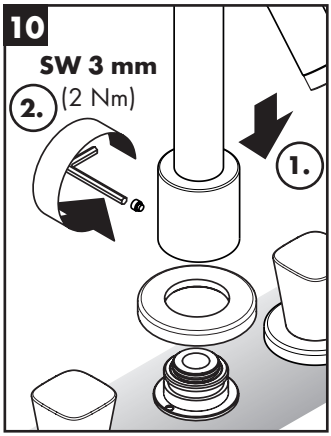
10
SW 3 mm
2.
(2 Nm)
1.

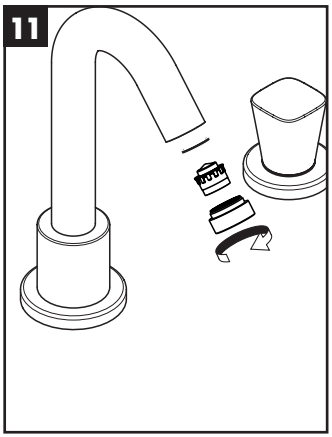
11

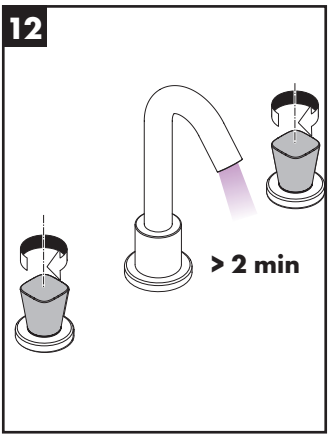
12
> 2 min

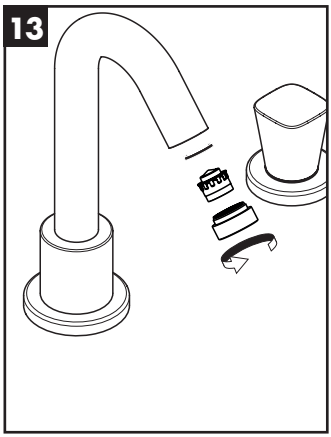
13

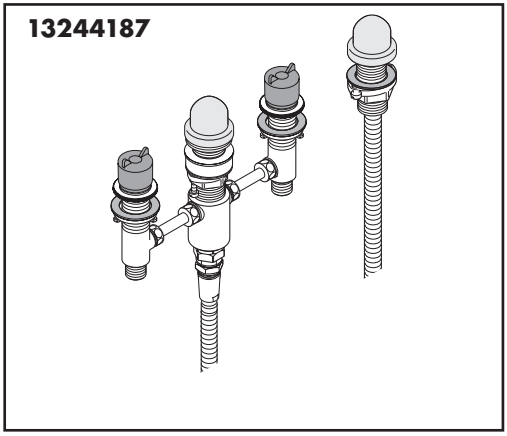
13244187

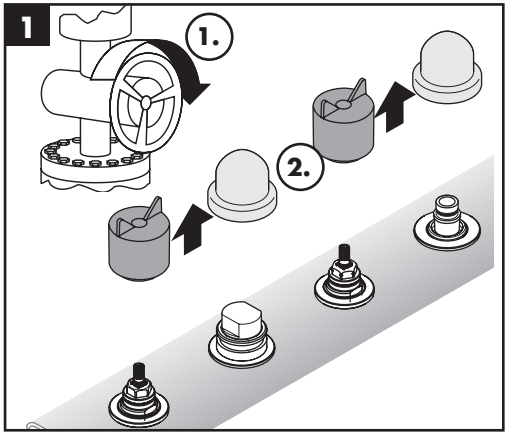
1
1.
2.

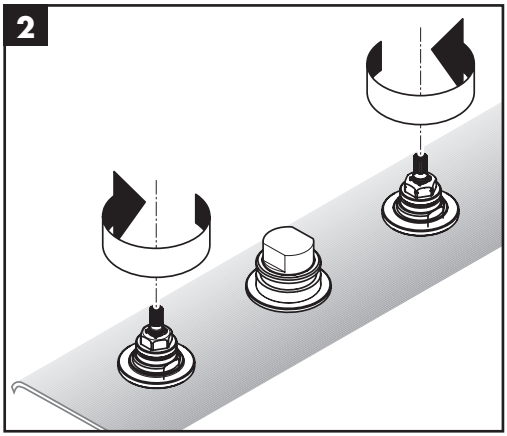
2

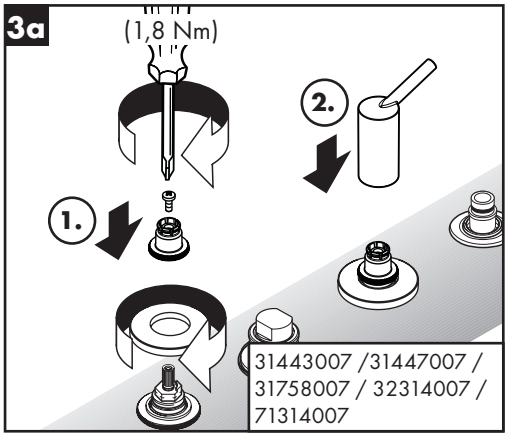
3a
(1,8 Nm)
1.
2.
31443007 /31447007 /
31758007 / 32314007 /
71314007

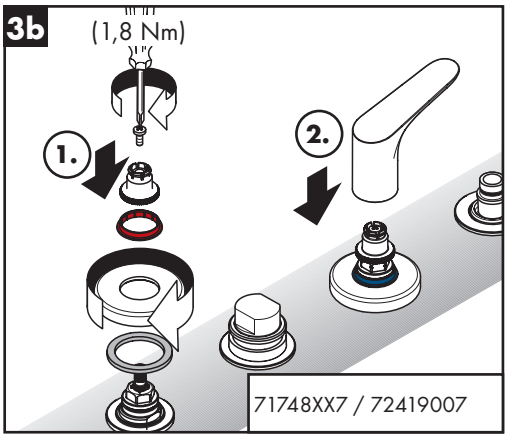
3b
(1,8 Nm)
1.
2.
71748XX7 / 72419007

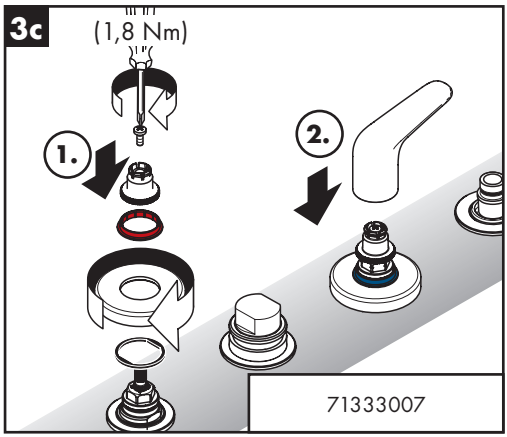
3c
(1,8 Nm)
1.
2.
71333007

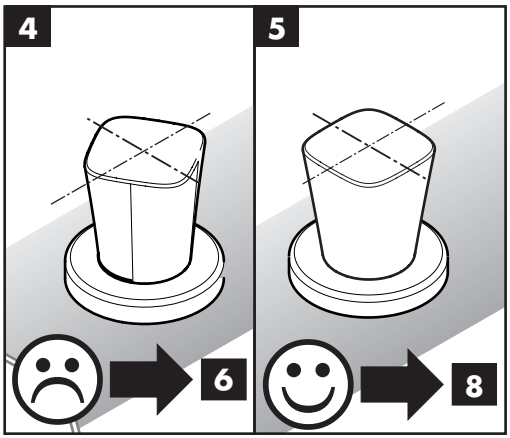
4
6
5
8

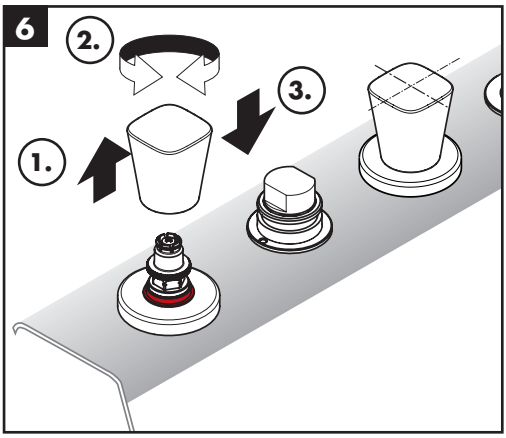
6
2.
3.
1.

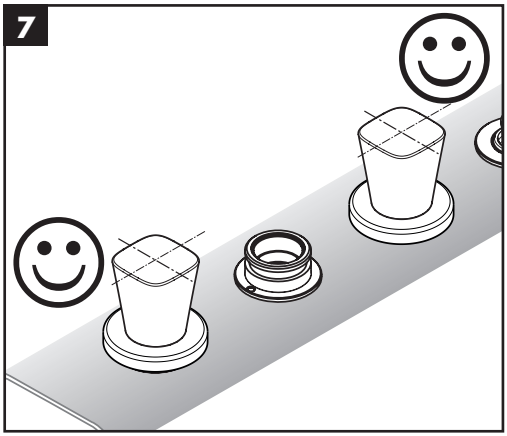
7

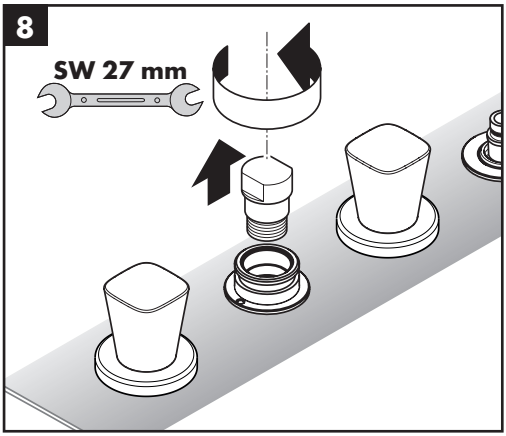
8
SW 27 mm

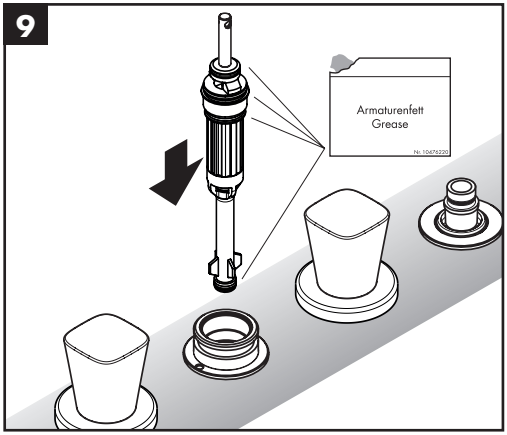
9
Armaturenfett
Grease
Nr. 10476220

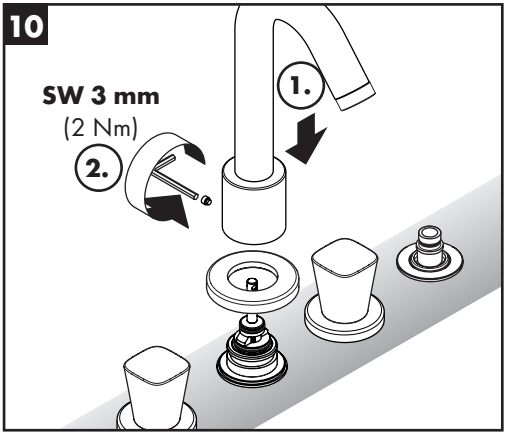
10
SW 3 mm
(2 Nm)
2.
1.

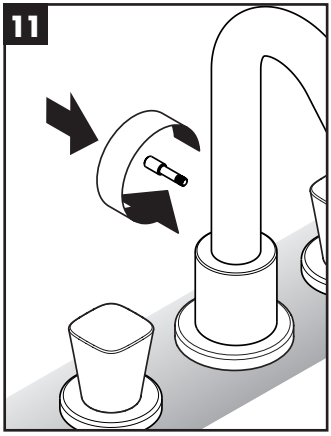
11

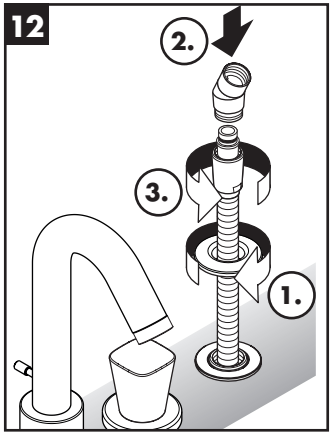
12
2.
3.
1.

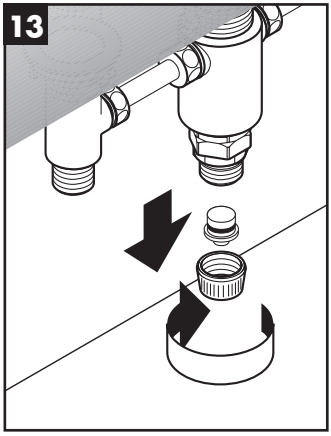
13

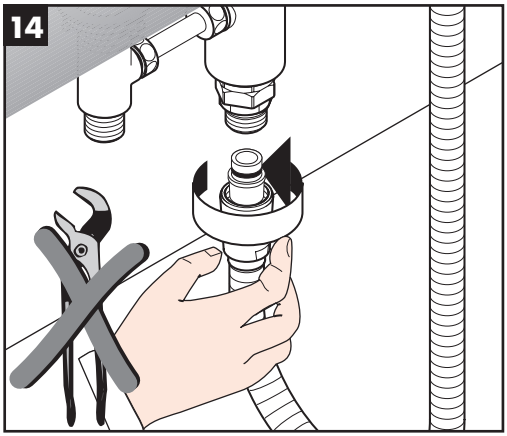
14

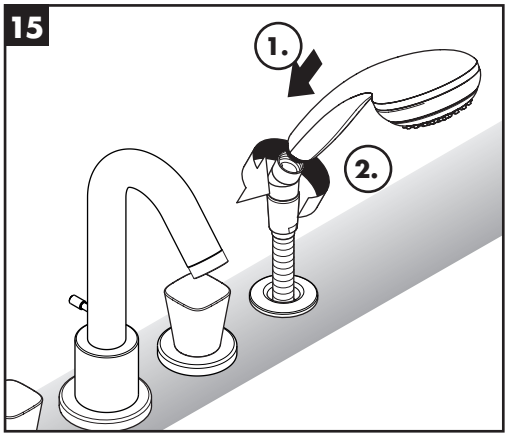
15
1.
2.

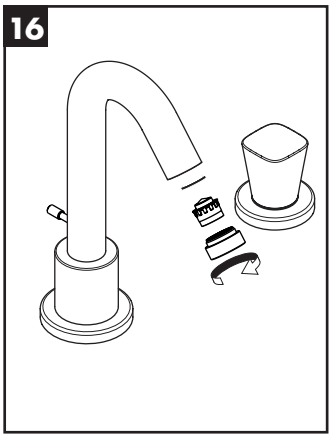
16

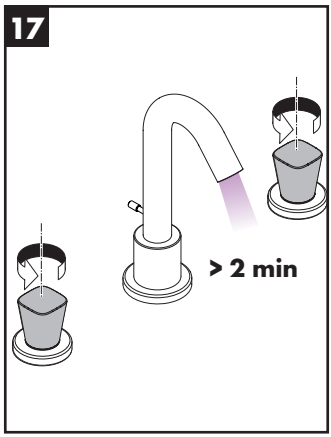
17
> 2 min

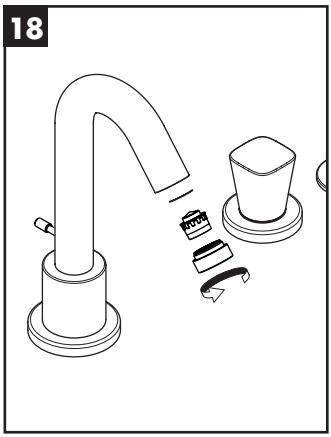
18

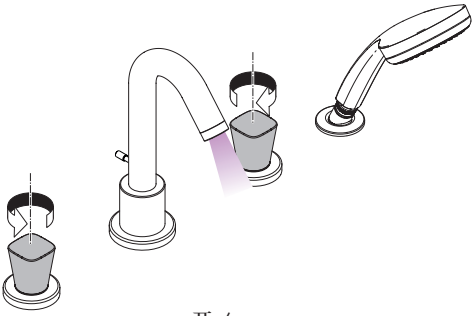

开 / open

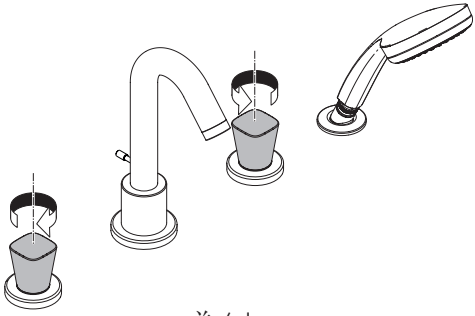

关 / close

冷 / cold

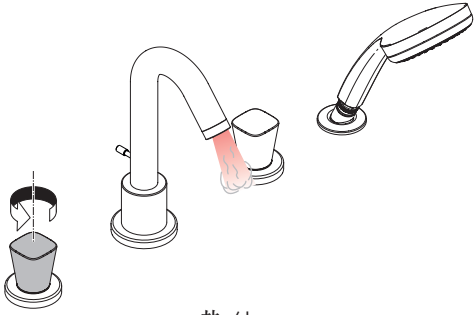

热 / hot

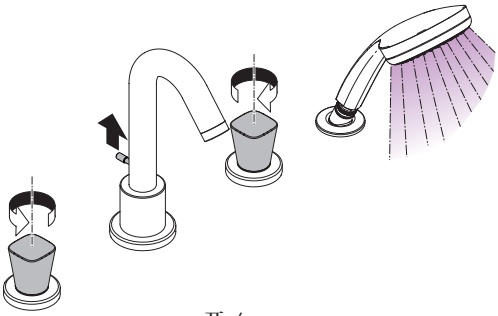

开 / open

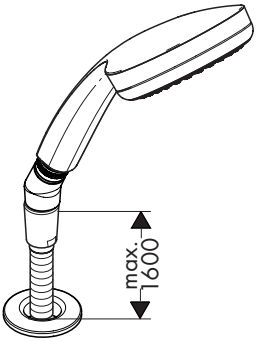

汉斯格雅产品的清洁建议

现代的卫浴龙头、厨房龙头、花洒、配件、盥洗台、浴盆和加热器采用的制造材料非常迥异，以适应产品外形设计和使用功能的市场需求。

为了避免产品损坏和由此引发的投诉及争议，必须在使用和清洁产品时遵循有关规程。

在保养汉斯格雅产品时，原则上必须注意:

- 只能使用那些有明确注明是适用于本产品的清洁剂。
- 不允许使用含有盐酸、蚁酸、氯漂或醋酸的清洁剂，因为这些清洁剂会给产品表面造成严重的损伤。
- 含磷酸的清洁剂必须在特定条件下使用。
- 不允许将两种以上清洁剂混合使用。
- 不允许使用具有研磨作用的清洁工具和设备，如不适合的清洁粉末、海绵垫或超细麦克布。
- 必须严格遵守清洁剂生产厂商的使用说明。
- 严格遵守清洁剂的用量和作用时间，决不允许清洁剂的作用时间长于规定值。
- 定期的清洁以预防水垢。
- 不允许将清洁剂直接喷射到汉斯格雅产品上，因为喷雾会进入汉斯格雅产品的开口部分和缝隙中而造成损害。首先将清洁剂喷在软布上，再用软布进行清洁。
- 清洁之后必须用足够的清水冲洗，以彻底去除残留的吸附物(清洁剂)。
- 不允许使用蒸汽清洗机，高温会损害产品。

重要说明

肥皂，洗发水、沐浴液、染发剂、香水、刮胡水、指甲油的残留也会对产品造成损伤。

此处：使用后要小心地用清水将剩余物冲洗干净。同样在产品下方不得存放洗涤剂和化学药品，例如不可放在用于洗脸盆的梳洗柜中否则挥发气体将损坏产品。

在已经损伤的表面继续使用清洁剂会给表面造成更大的损伤。

表面损坏的部件必须更换，否则会有受伤的危险。

不按规定进行清洁而造成的任何损坏不在本公司产品保修范围之内。

担保

Hansgrohe 向用户保证，该产品无制造 缺陷。如果自购买之日起五年内出现缺 陷，Hansgrohe 将免费排除。 保证条件和详 情见 www.hansgrohe-int.com/guarantee。 在提 出保修的权利时请联系您的合同方。本保证 不涉及有关国家法律规定的消费权

QuickClean

有了QuickClean，手工清洁功能，要去掉喷头上的水垢，只需简单地搓除即可。

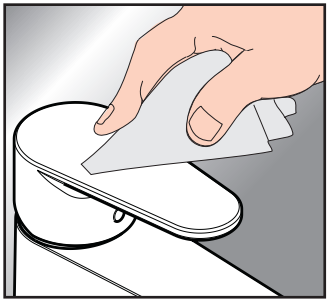

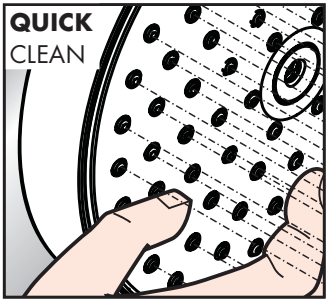

Cleaning Recommendation for Hansgrohe Products

Today, modern sanitary and kitchen tapware, showers, accessories, washstands, tubs and radiators consist of very different materials to comply with the needs of the market with regard to design and functionality.

To avoid damage and reclamations, it is necessary to consider certain criteria when cleaning.

With regard to caring for the Hansgrohe products, the following must in principle be heeded:

- Only use cleaning material which is explicitly provided for this type of application.
- Never use cleaning materials, which contain hydrochloric acid, formic acid, chlorine pale lye or acetic acid, as they cause considerable damage.
- Phosphorus acidic cleaners are only conditionally applicable.
- Mixing cleaning agents is not permitted, generally.
- Never use cleaning materials or appliances with an abrasive effect, such as unsuitable cleaning powders, sponge pads or micro fibre cloths.
- The instructions of the cleaning agent manufacturers have to be followed absolutely.
- Cleaning has to be carried out with a specified cleaner dosage, contact time, object-related and adapted to the needs.
- The building up of calcifications has to be removed by cleaning regulary.
- When using spray cleaners, spray the cleaning solution onto a soft cloth or sponge, never directly onto the Hansgrohe products, as the atomised spray could enter openings and gaps in the Hansgrohe products and cause damage.
- After cleaning rinse thoroughly with clean water to remove any cleaner residue.
- The use of steam cleaners is not permitted. The high temperatures can damage the products.

Important

Residues of toiletries such as liquid soaps, shampoos and shower gels, hair dyes, perfumes, aftershave and nail varnish can also cause damage.

Here too: Carefully rinse with water after use to remove residues.

Likewise, do not store any cleaning agents or chemicals under the products, for example in a vanity unit, as the vapours may damage the products.

The damage of already damaged surfaces will deteriorate under the effect of the cleansers.

Components with damaged surfaces must be exchanged, otherwise there could be an injury danger.

Damage caused by improper treatment will not be covered by our guarantee.

Warranty

Hansgrohe guarantees to the consumer that this product is free of production faults. If evertheless any defect is detected within 5 years from date of purchase, Hansgrohe will remedy this defect free of charge. You will find the conditions and details of this guarantee at www.hansgrohe-int.com/guarantee. Please contact your contracting party to claim your rights under this guarantee. This guarantee does not affect the customer's rights under the respective national legislation.

QuickClean

The QuickClean cleaning function only needs a small manual rub over to remove the lime scale from the spray channels.

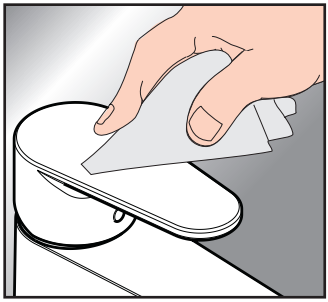

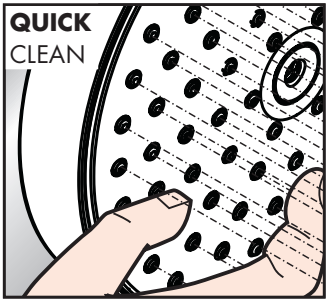

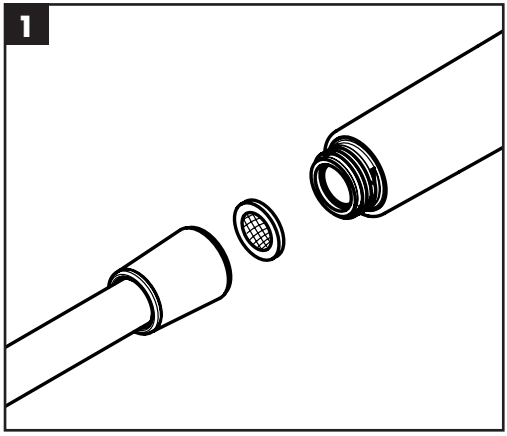
1

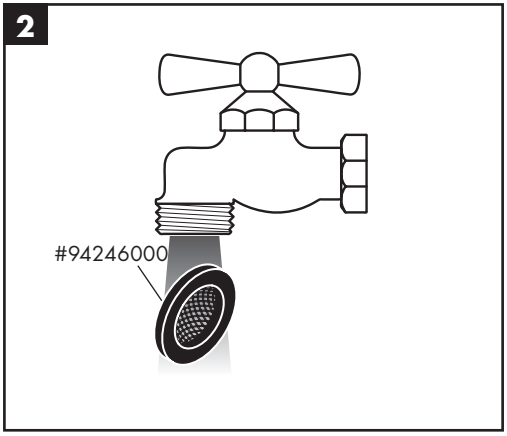
2
#94246000

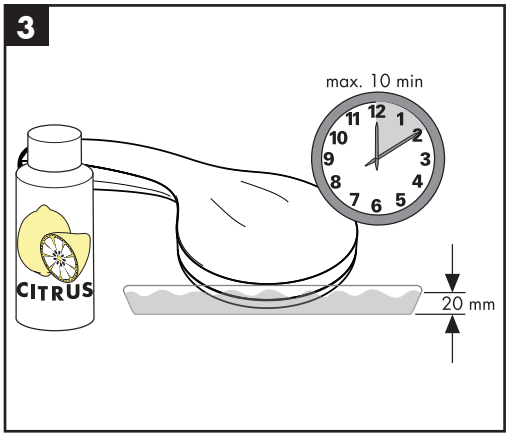
3
max. 10 min
12
1
2
3
4
5
6
7
8
9
10
11
CITRUS
20 mm

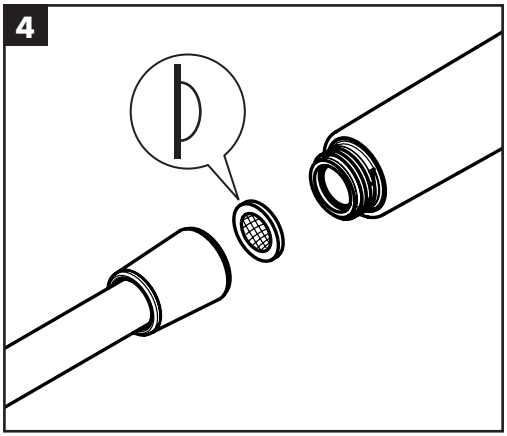
4

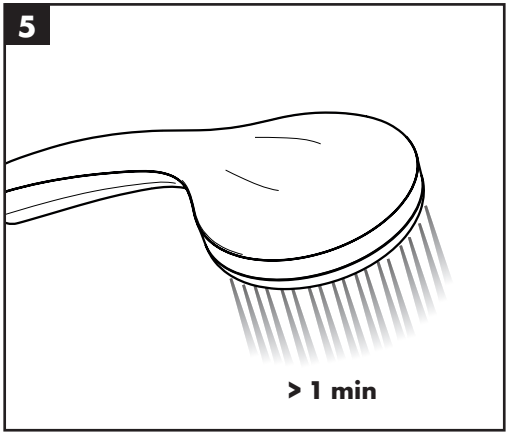
5
> 1 min

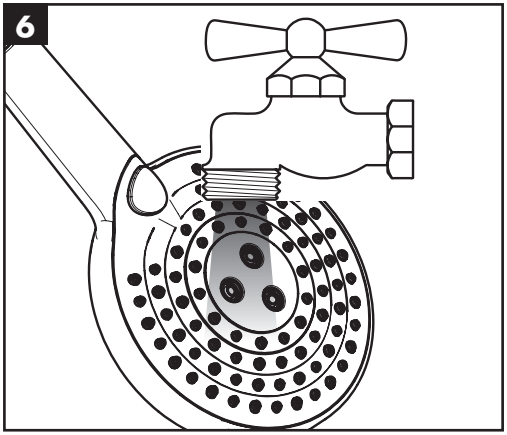
6

Metris S
31436007

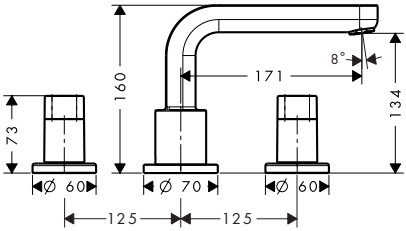

Talis S
32313007

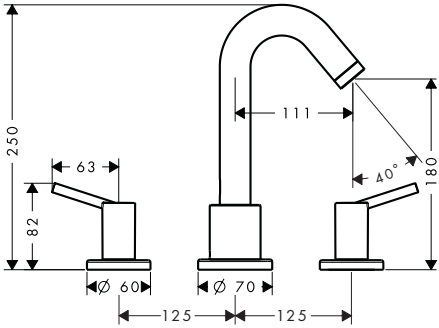

Logis
71300007

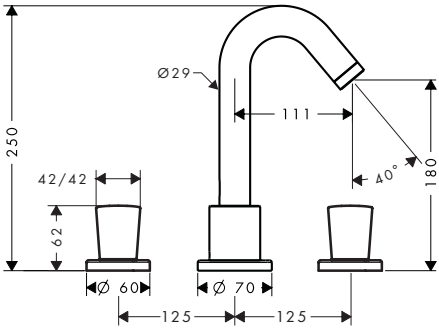

Talis E
71747007

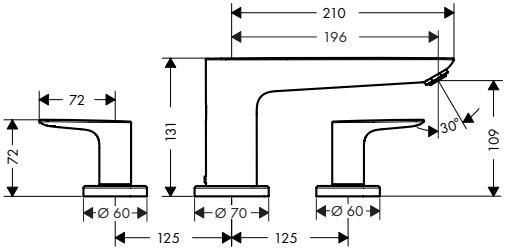

Talis S
72415007

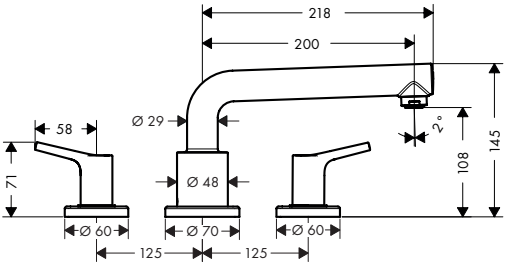

Metris S
31447007

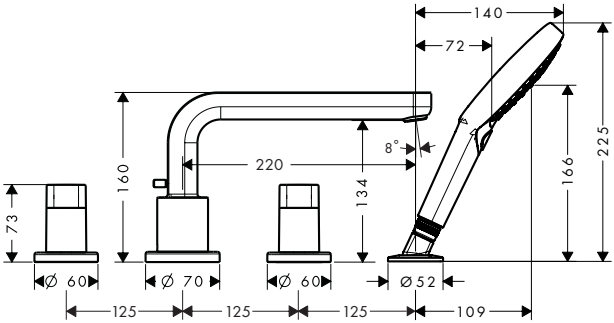

Metris S
31443007

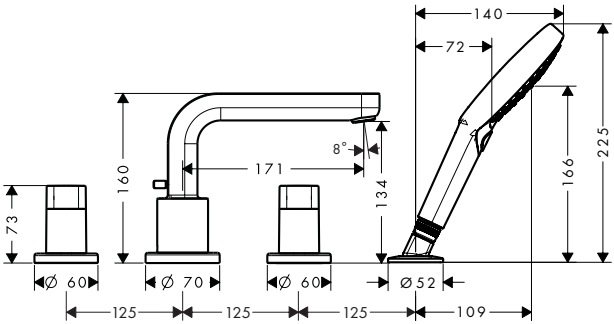

Focus S
31758007

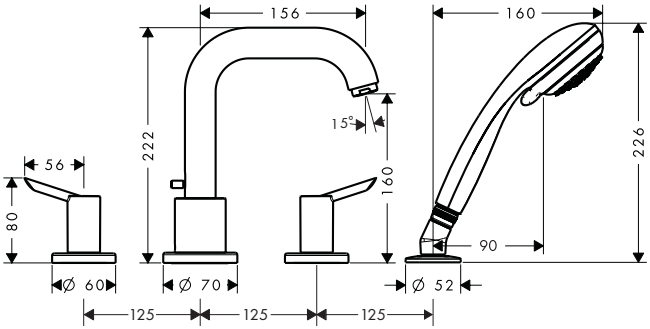

Talis S
32314007

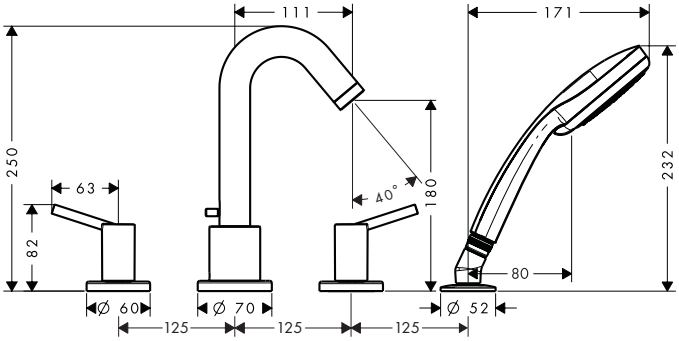

Logis
71314007

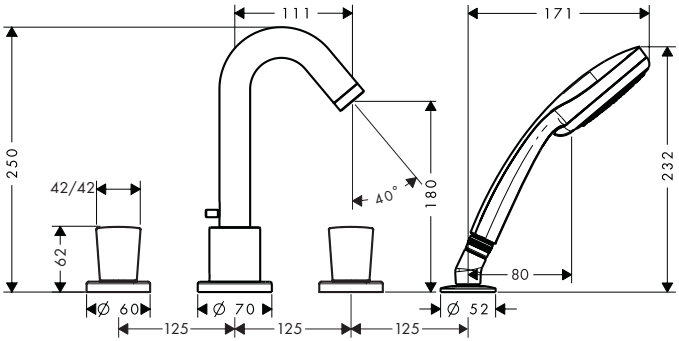

Talis E
71748XX7

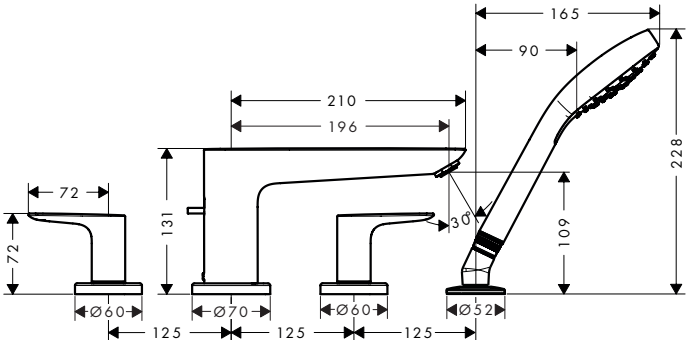

Talis S
72419007

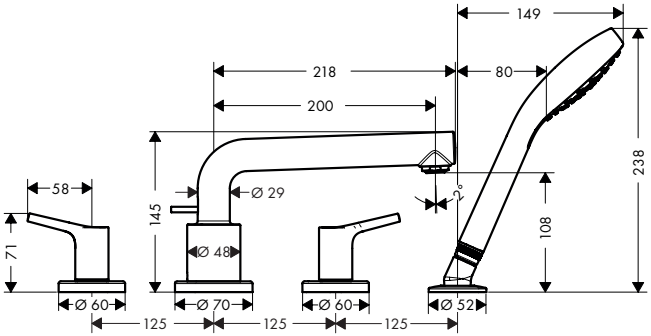

Novus
71333007

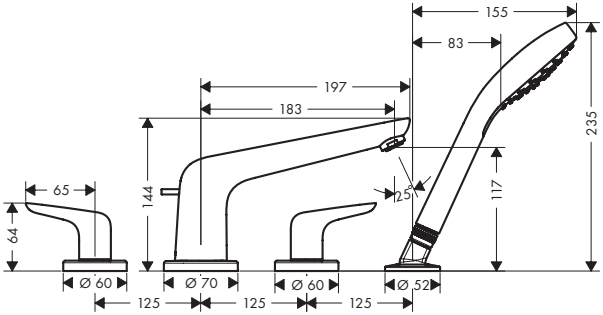

Metris S 31436007

Focus S 31758007

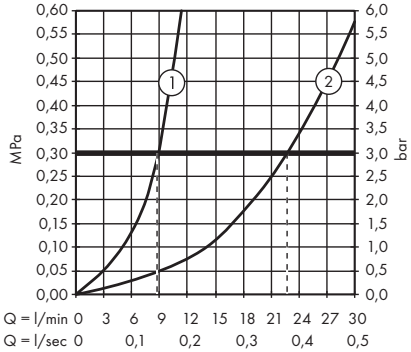

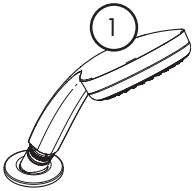

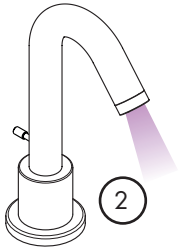

Talis S 32313007 / 32314007

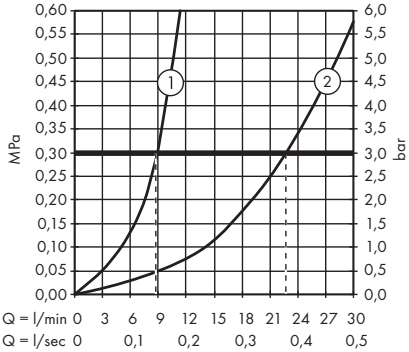

Logis 71300007 / 71314007

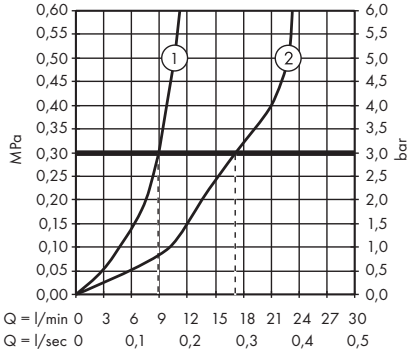

Metris S 31443007 / 31447007

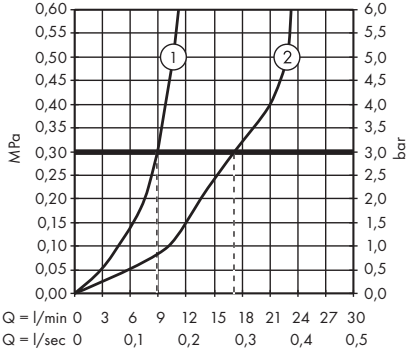

Talis E 71747007 / 71748XX7

Talis S 72415007 / 72419007

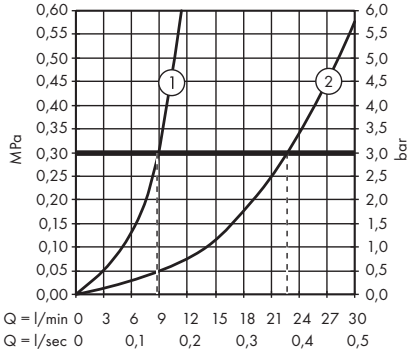

Novus 71333007

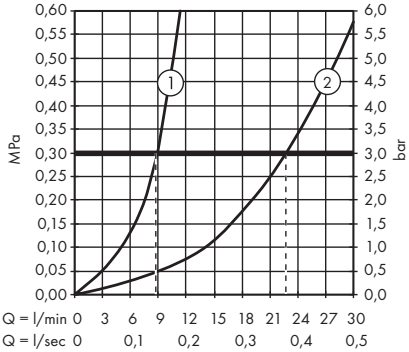

Logis
71300007

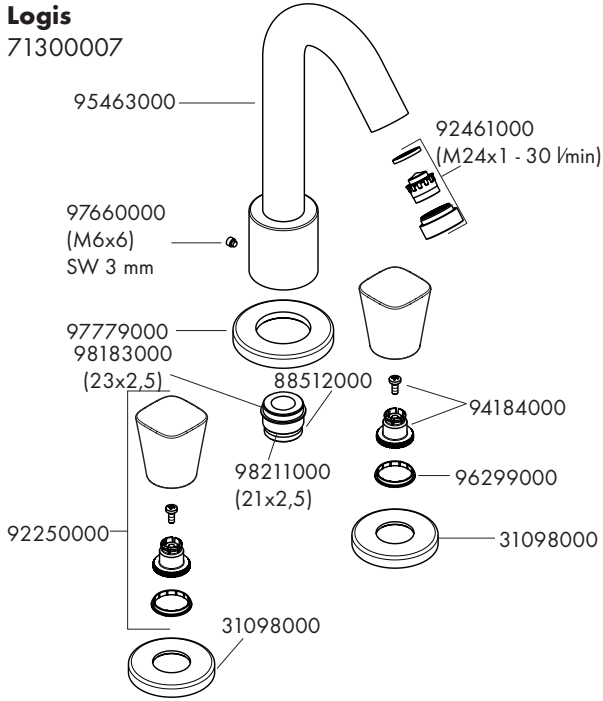

Logis
71314007

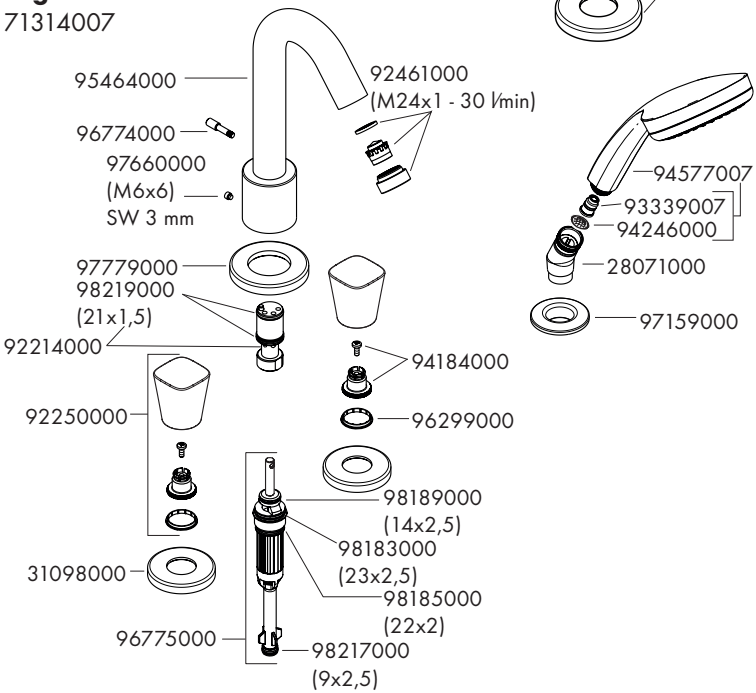

Metris S
31436007

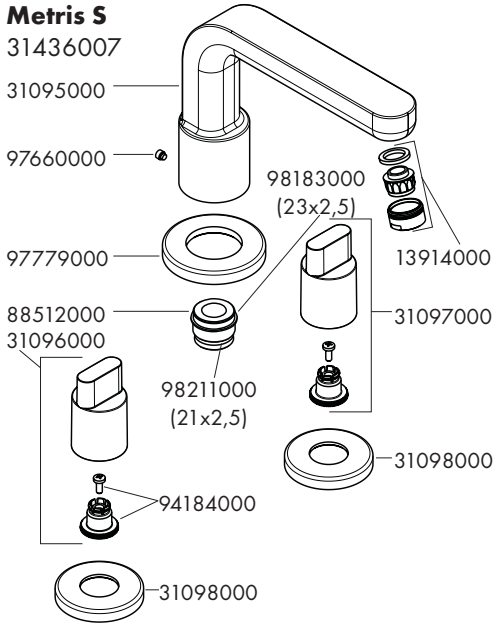

Metris S
31443007 / 31447007

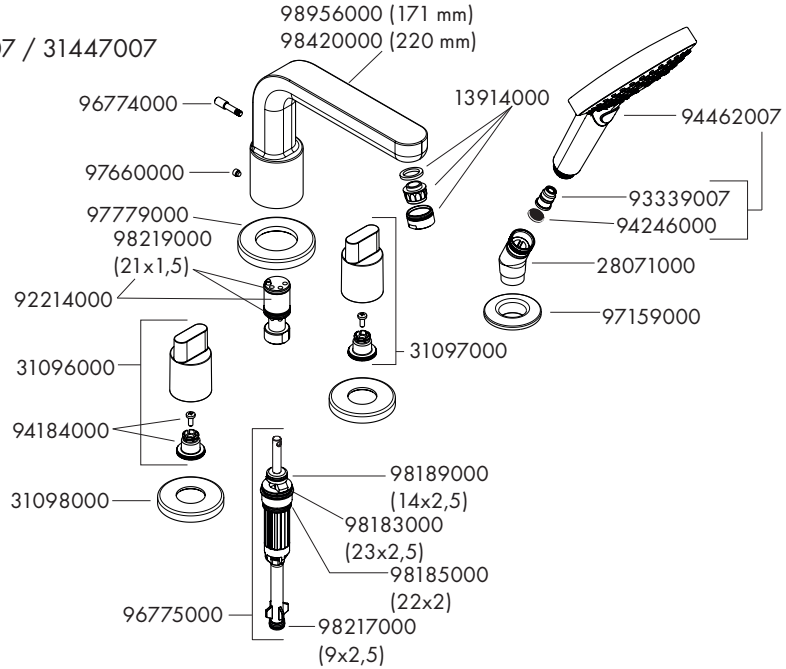

Focus S

31758007

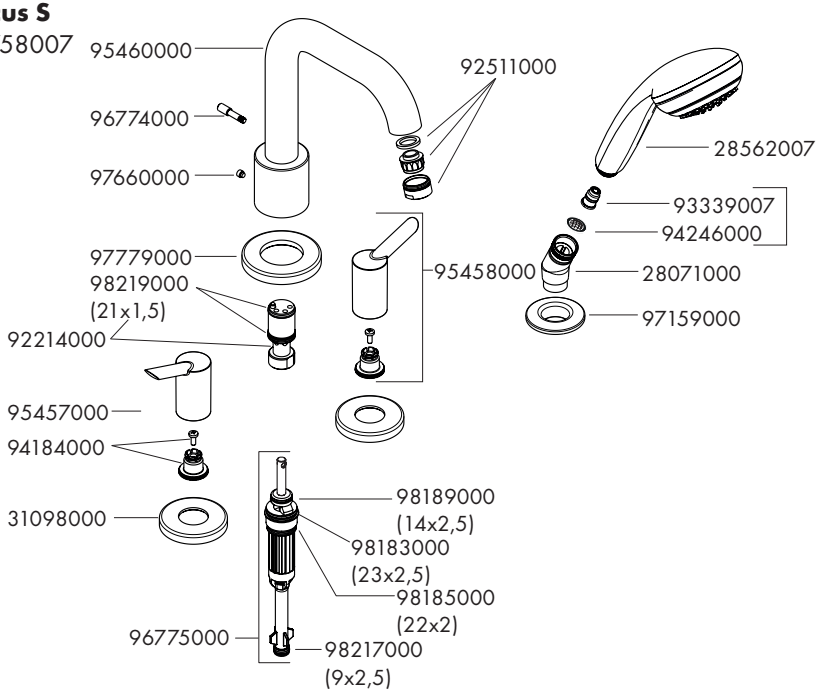

Talis S
32313007

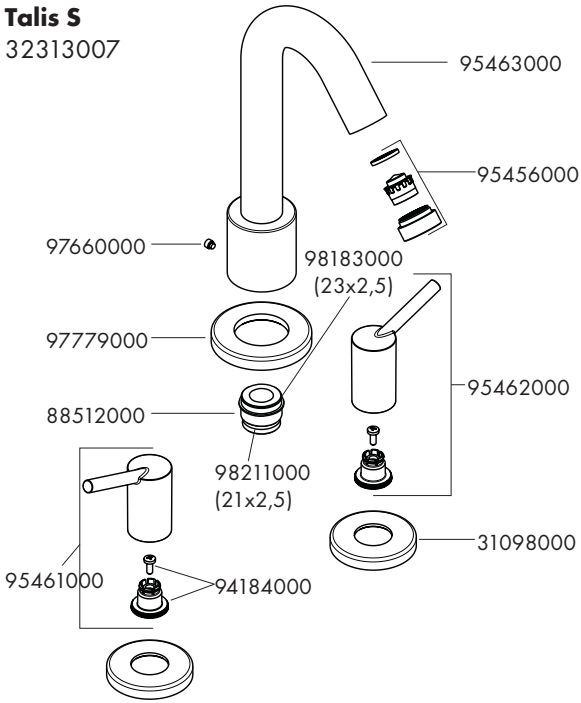

Talis S
32314007

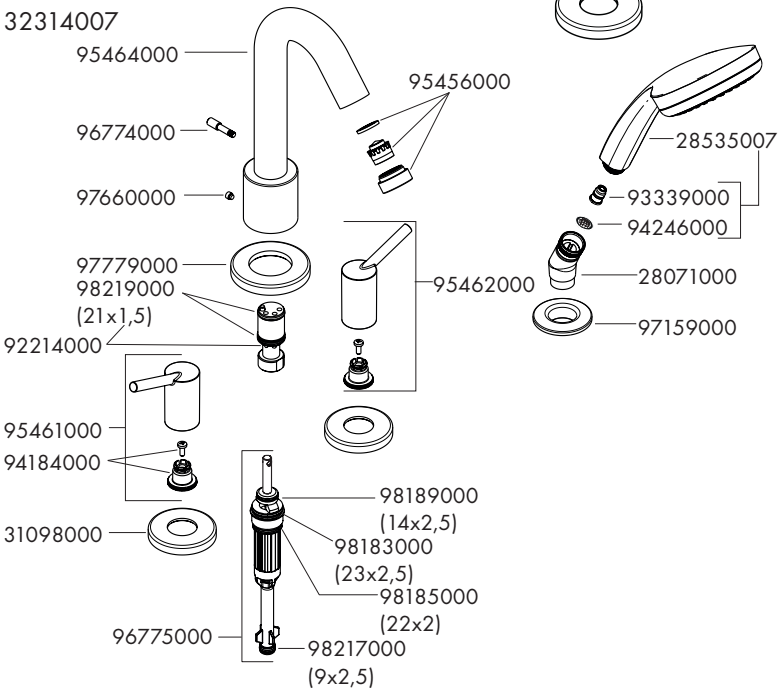

Talis E
71747007

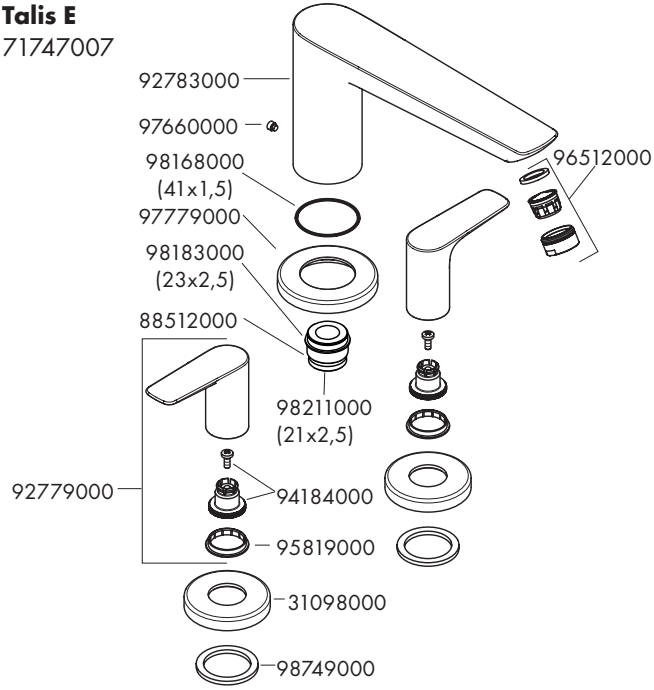

Talis E
71748XX7

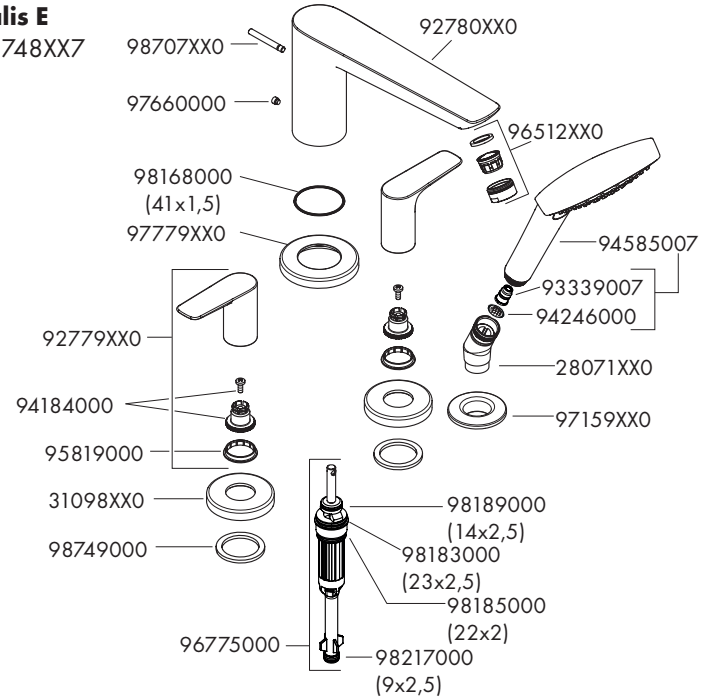

Talis S
72415007

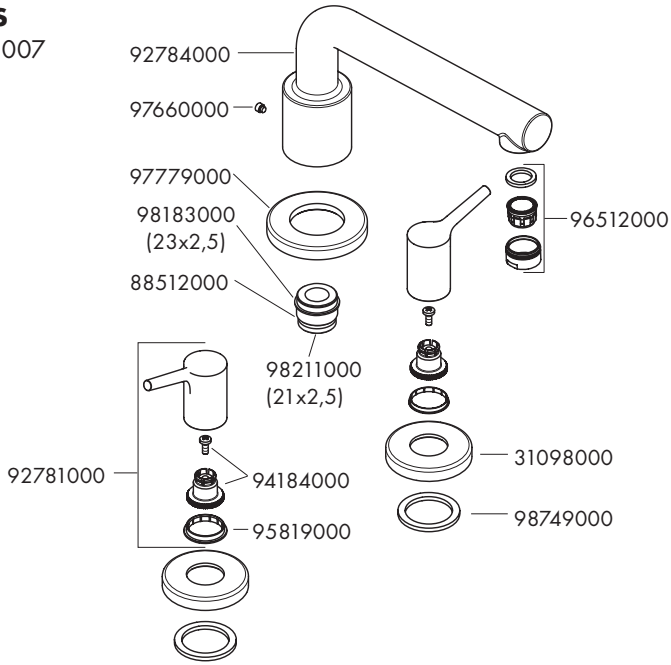

Talis S
72419007

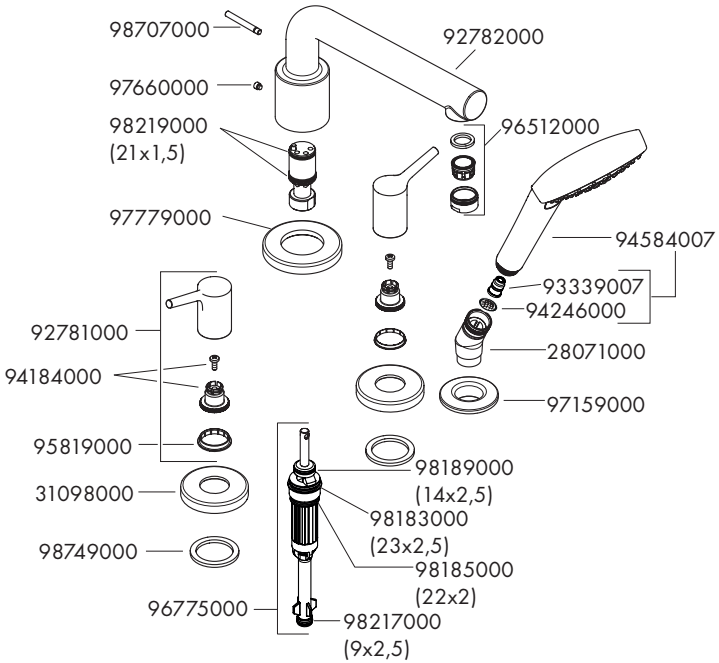

Novus
71333007

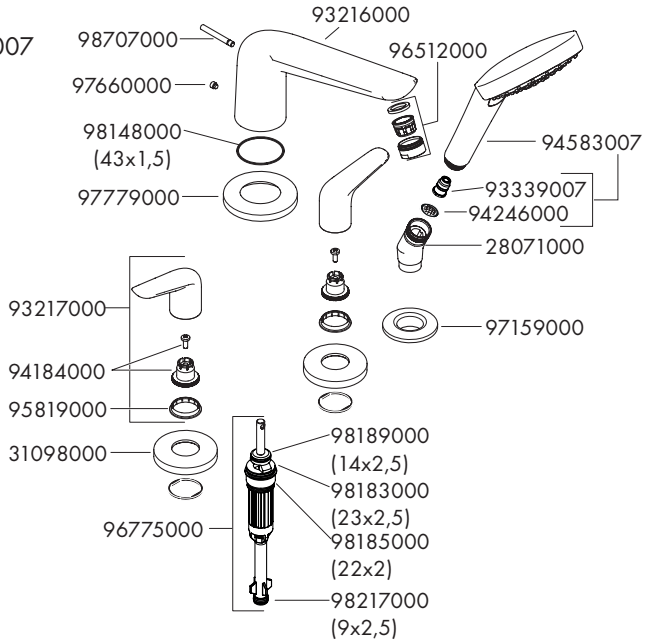

hansgrohe
Hansgrohe · Auestraße 5 - 9 · D-77761 Schiltach · Telefon +49 (0) 78 36/51-1282 · Telefax +49 (0) 7836/511440
E-Mail: info@hansgrohe.com · Internet: www.hansgrohe.com

08/2021
9.02702.51