hansgrohe

ZH 用户手册 / 组装说明 2

EN Instructions for use / Assembly instructions 3

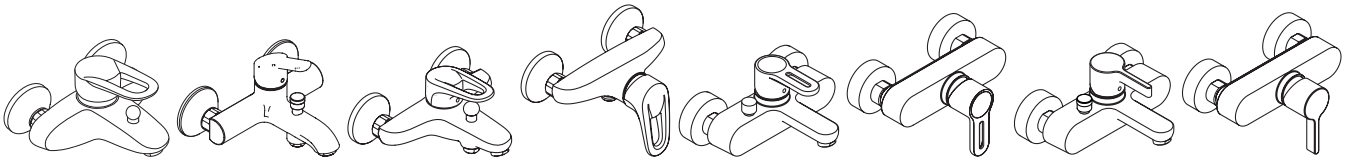

Metropol	**Sportive 2**	**Metropol E**	**Metropol E**	**Metropol S**	**Metropol S**	**Metris S**	**Metris S**
14410007	14440007	14470007	14670007	14461007	14661007	31460007	31660007

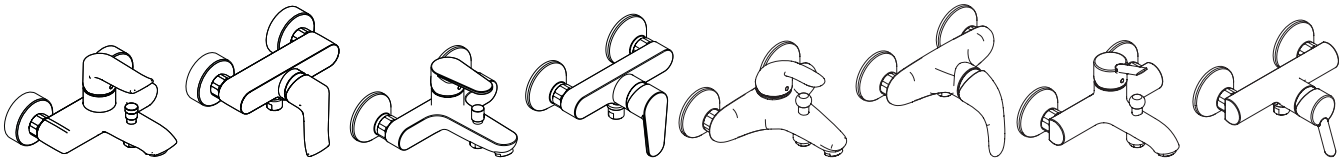

Metris	**Metris**	**Talis E²**	**Talis E²**	**Focus E**	**Focus E**	**Focus S**	**Focus S**
31480007	31680007	31642007	31662007	31740007	31760007	31742007	31762007

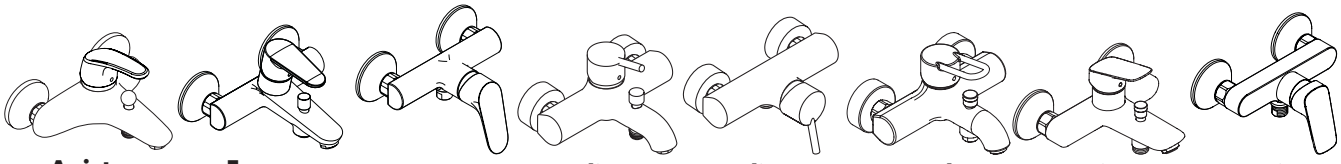

Avista	**Focus**	**Focus**	**Talis S**	**Talis S**	**Metropol Puro**	**Logis**	**Logis**
31748007	31940007	31960007	32420007	32620007	33144007	71400XX7	71600007

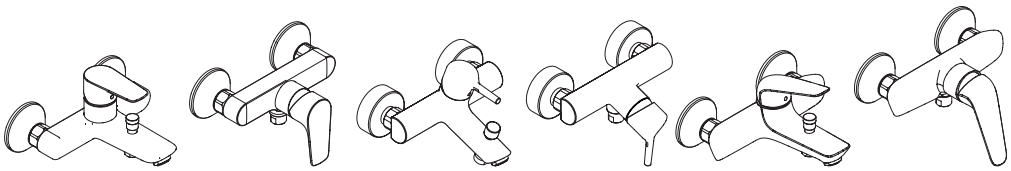

Talis E	**Talis E**	**Talis S**	**Talis S**	**Novus**	**Novus**
71740XX7	71760007	72400007	72600007	71040007	71060007

安全技巧

⚠ 装配时为避免挤压和切割受伤, 必须戴上手套.
⚠ 本产品只允许作为洗浴, 卫生和洁身之用.
⚠ 冷热水管间过大的压力差必须予以平衡.

安装提示

- 安装前必须检查产品是否受到运输损害. 安装后将不认可运输损害或表面损伤.
- 管道和阀门必须根据通用标准进行安装, 冲洗和检查.
- 请遵守当地国家现行的安装规定.

技术参数

工作压强:	最大 1 MPa
推荐工作压强:	0,1 - 0,5 MPa
测试压强:	1,6 MPa
	(1 MPa = 10 bar = 147 PSI)
热水温度:	最大 60°C
中心距离:	150±12 mm
连接管线 G 1/2:	左热右冷
热力消毒:	70°C / 4 分钟

- 自动防止回流
- 该产品专为饮用水设计!

符号说明

请勿使用含有乙酸的硅胶!

恒温阀芯的安全功能可以预先设定所希望的最高出水温度, 例如最高温度为42°C

调节 (参见第页 5)

安装完成后必须检查调温器的出水温度. 如在取水处测量所得的温度与调温器上设定的温度有偏差, 那么必须进行调整.

热水温度调节. 如果使用即热式喷头, 则不建议安装热水阀门.

大小 (参见第页 6)

流量示意图 (参见第页 9)

备用零件 (参见第页 10)

XX = 颜色代码
00 = 镀铬
67 = Matt Black

清洗 (参见第页 19)

操作 (参见第页 18)

问题	原因	补救
龙头出水量小	- 花洒滤网有垃圾堵塞	- 清洗花洒和软管间的过滤网
龙头不灵活	- 阀芯损坏, 结垢	- 更换阀芯
龙头滴水	- 阀芯损坏	- 更换阀芯
热水温度过低	- 温度限制器设置错误	- 设置温度限制器
燃气热水器不工作	- 手持花洒的流量限制器没有去除	- 去除流量限制器
	- 花洒滤网有垃圾堵塞	- 清洗花洒和软管间的过滤网

Safety Notes

⚠ Gloves should be worn during installation to prevent crushing and cutting injuries.
⚠ The product may only be used for bathing, hygienic and body cleaning purposes.
⚠ The hot and cold supplies must be of equal pressures.

Installation Instructions

- Prior to installation, inspect the product for transport damages. After it has been installed, no transport or surface damage will be honoured.
- The pipes and the fixture must be installed, flushed and tested as per the applicable standards.
- The plumbing codes applicable in the respective countries must be observed.

Technical Data

Operating pressure:	max. 1 MPa
Recommended operating pressure:	0,1 - 0,5 MPa
Test pressure:	1,6 MPa
	(1 MPa = 10 bar = 147 PSI)
Hot water temperature:	max. 60°C
Centre distance:	150±12 mm
Connections G 1/2:	cold right - hot left
Thermal disinfection:	70°C / 4 min

- Safety against backflow
- The product is exclusively designed for drinking water!

Symbol description

Do not use silicone containing acetic acid!

The desired maximum temperature for example max. 42°C can be pre-set thanks to the safety function.

Adjustment (see page 5)

After the installation, the output temperature of the thermostat must be checked. A correction is necessary if the temperature measured at the output differs from the temperature set on the thermostat.

To adjust the hot water limiter. Using a hot water limiter in combination with a continuous flow water heater is not recommended.

Dimensions (see page 6)

Flow diagram (see page 9)

Spare parts (see page 10)

XX = Colors
00 = Chrome Plated
67 = Matt Black

Cleaning (see page 19)

Operation (see page 18)

Fault	Cause	Remedy
Insufficient water	- Shower filter seal dirty	- Clean filter seal between shower and hose
Mixer stiff	- Cartridge defective, calcified	- Exchange cartridge
Mixer dripping	- Cartridge defective	- Exchange cartridge
Hot water temperature too low	- Hot water limiter incorrectly set	- Set hot water limiter
Instantaneous heater didn't work	- Flow limiter in handshower isn't removed	- Remove flow limiter
	- Shower filter seal dirty	- Clean filter seal between shower and hose

Assembly (see page 4)

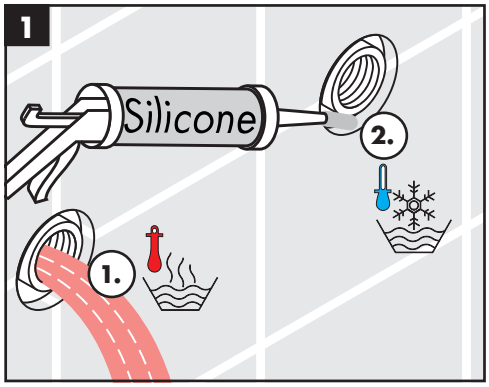
1
Silicone
2.
1.

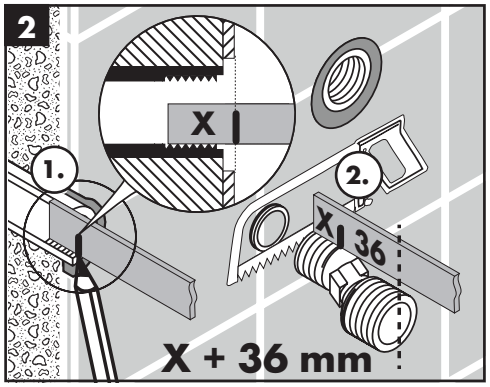
2
X
1.
2.
X
36
X + 36 mm

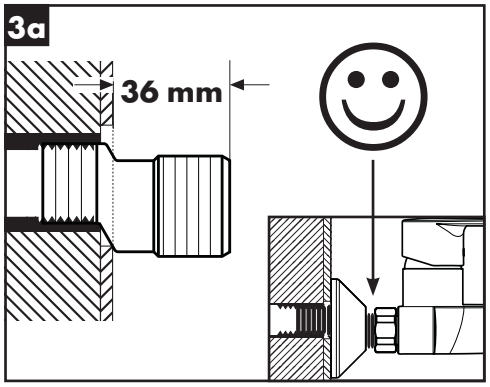
3a
36 mm

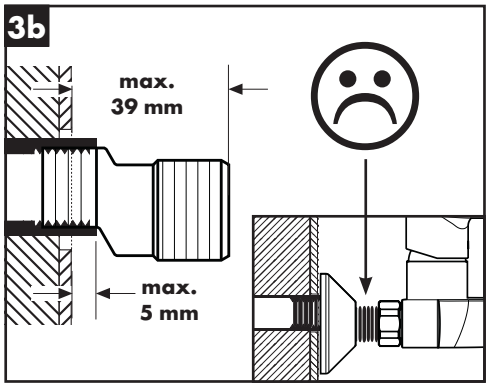
3b
max.
39 mm
max.
5 mm

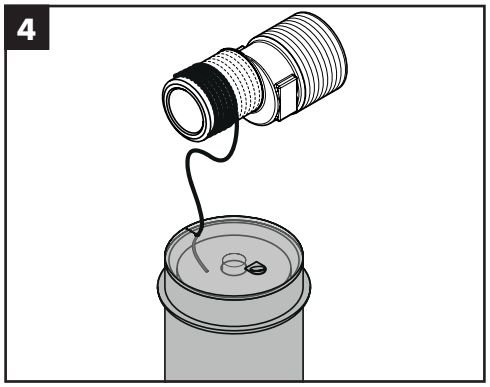
4

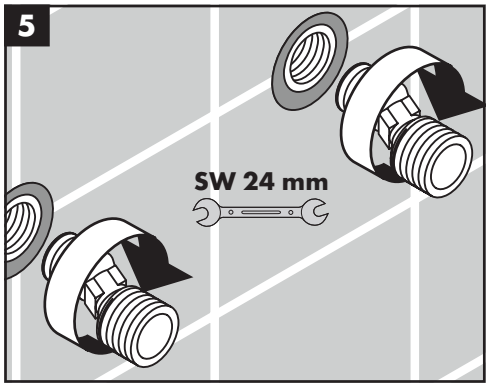
5
SW 24 mm

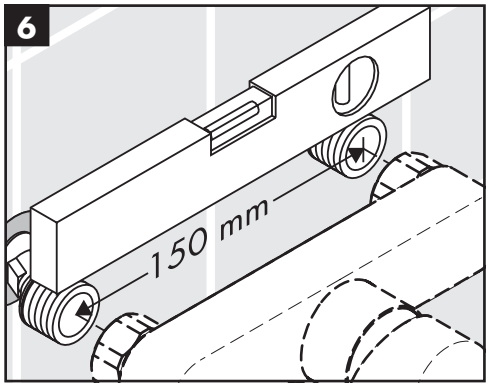
6
150 mm

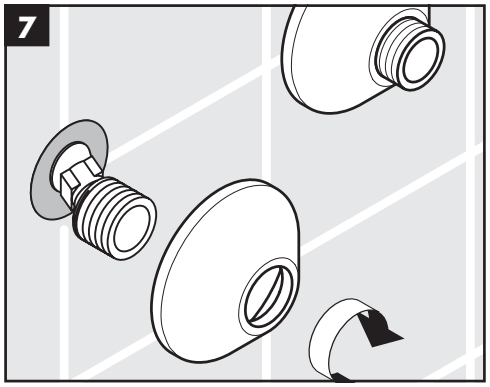
7

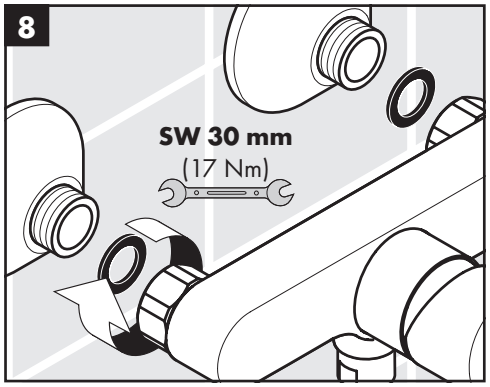
8
SW 30 mm
(17 Nm)

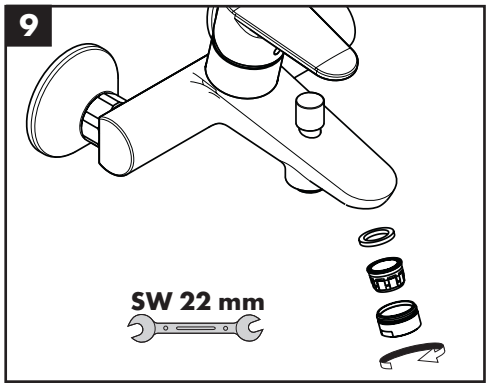
9
SW 22 mm

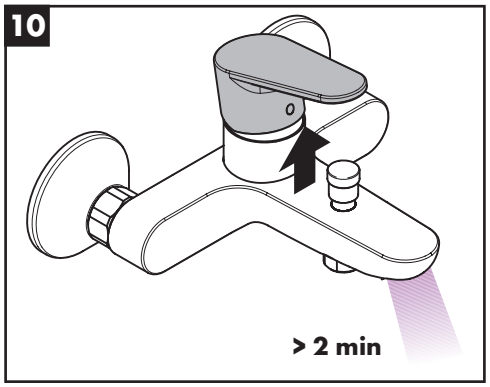
10
> 2 min

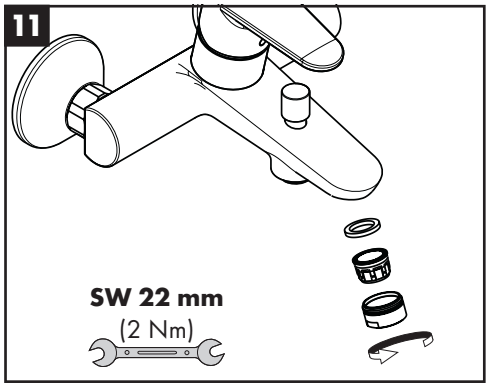
11
SW 22 mm
(2 Nm)

60 °C

10 °C

0,3 MPa
0,3 МПа
0,3 ميجابسكال

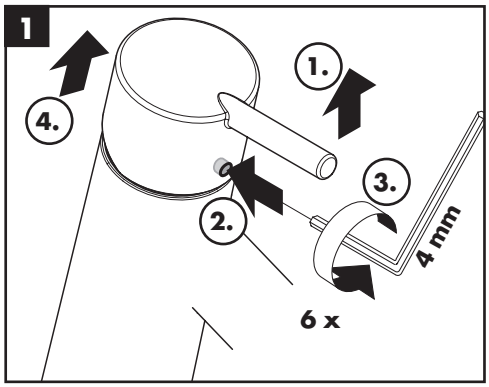

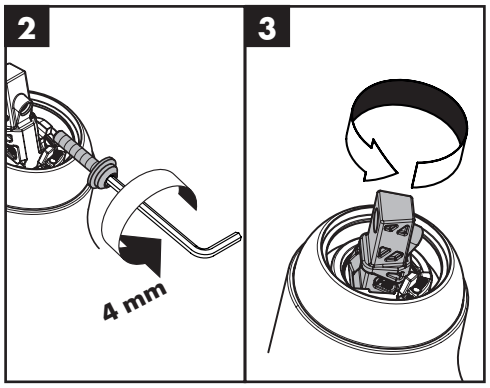

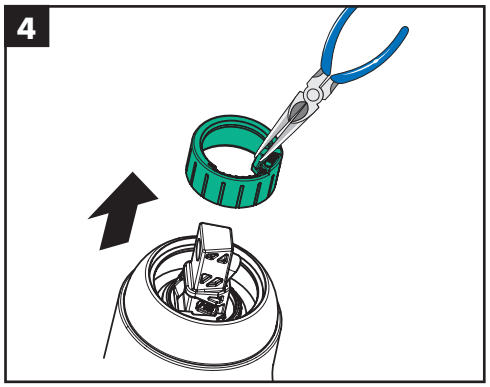

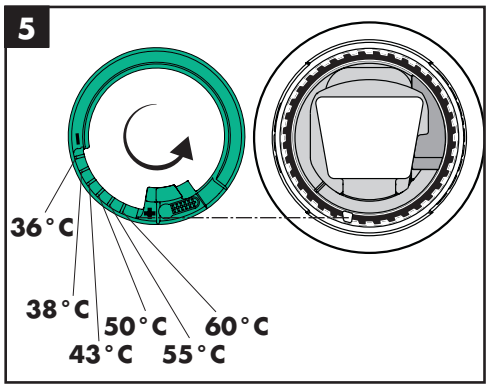

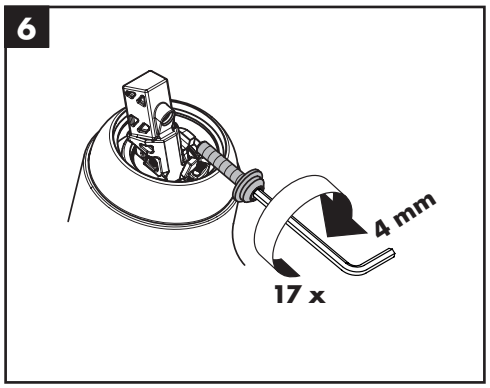

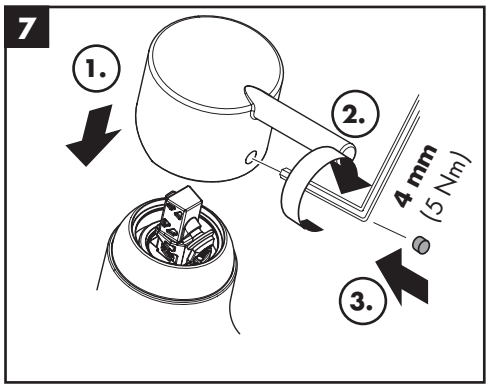

Metropol
14410007

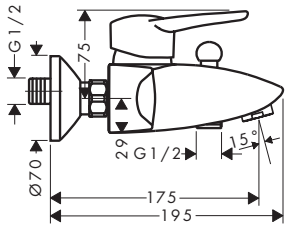

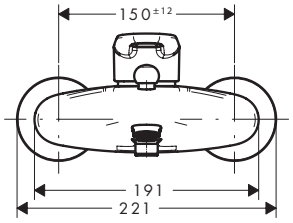

Sportive 2
14440007

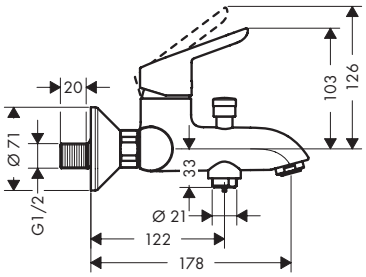

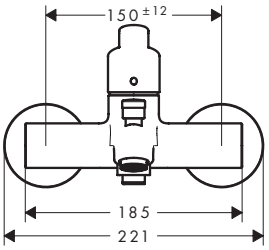

Metropol E
14470007

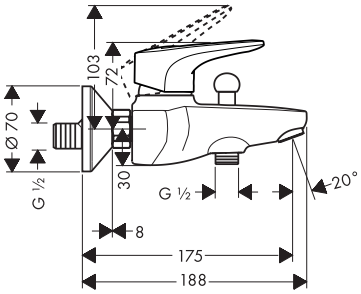

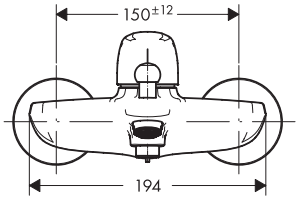

Metropol E
14670007

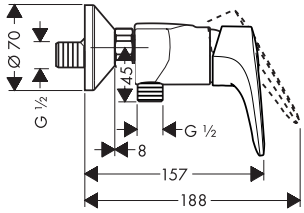

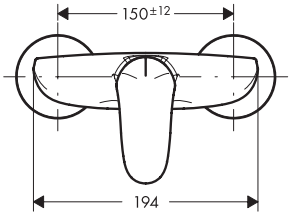

Metropol S
14461007

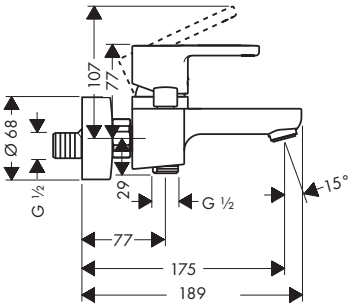

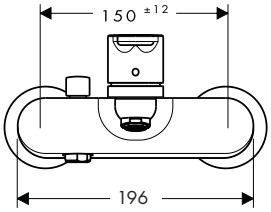

Metropol S
14661007

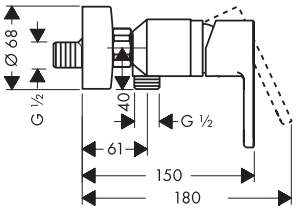

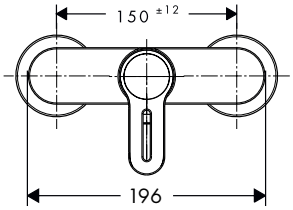

Metris S
31460007

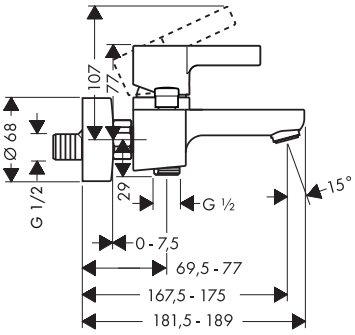

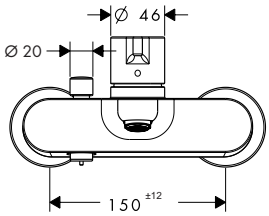

Metris S
31660007

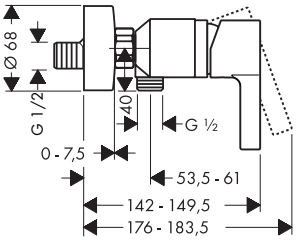

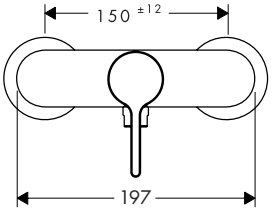

Metris
31480007

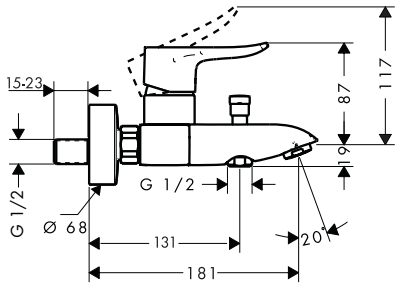

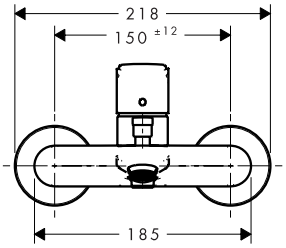

Metris
31680007

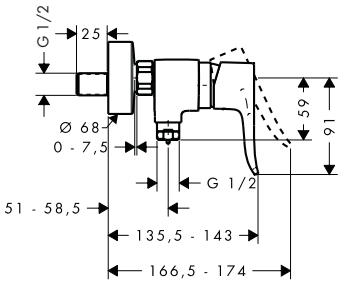

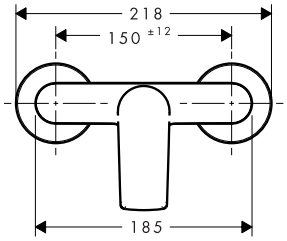

Talis E²
31642007

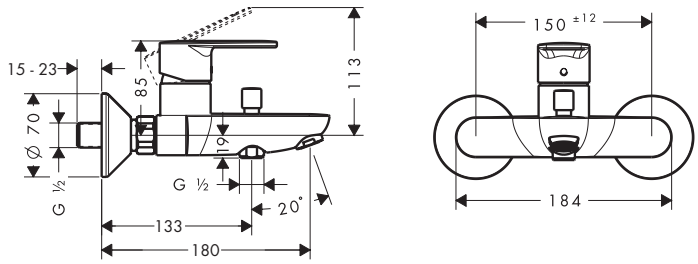

Talis E²
31662007

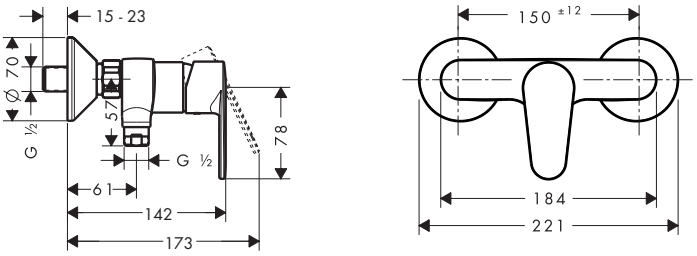

Focus E
31740007

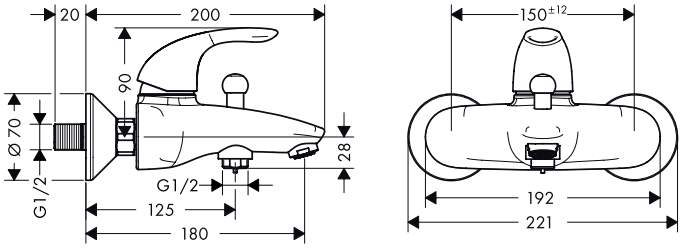

Focus E
31760007

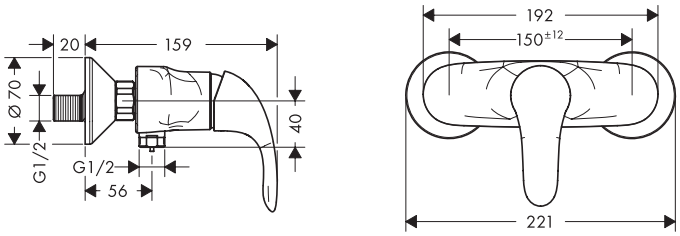

Focus S
31742007

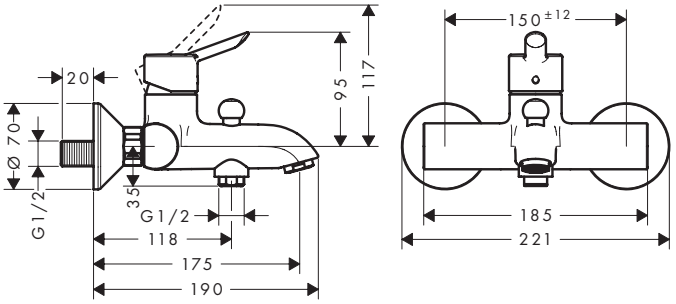

Focus S
31762007

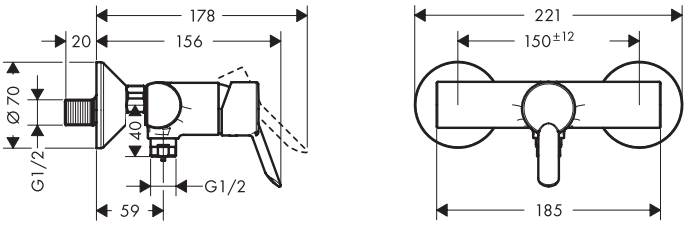

Avista
31748007

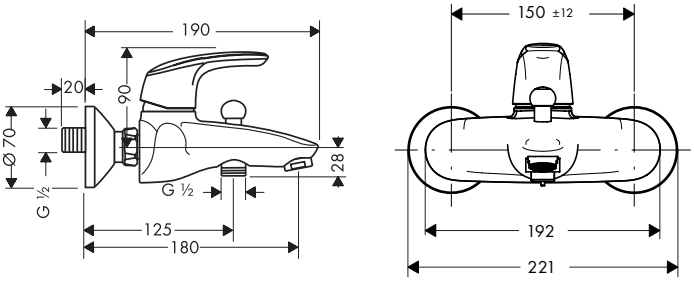

Metropol Puro
33144007

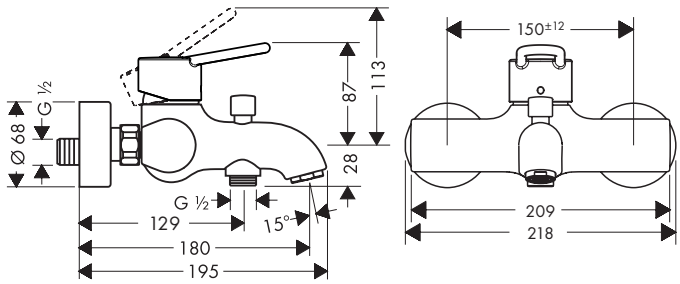

Focus
31940007

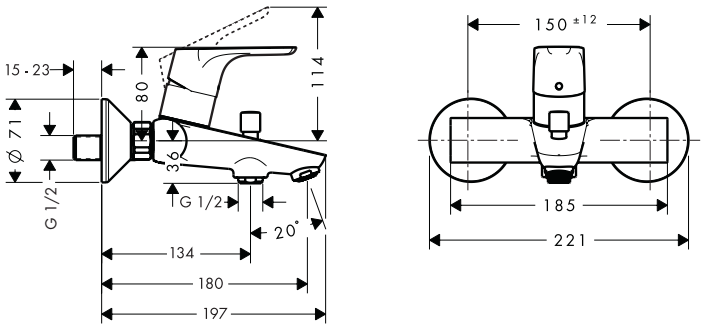

Focus
31960007

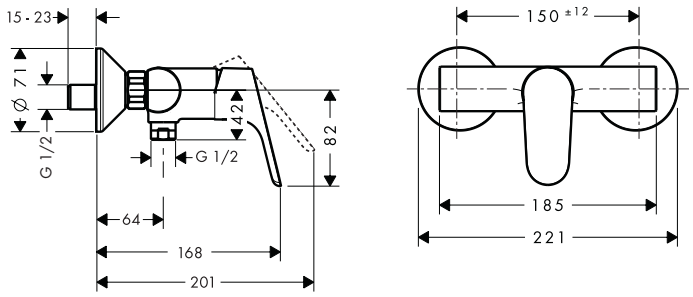

Talis S
32420007

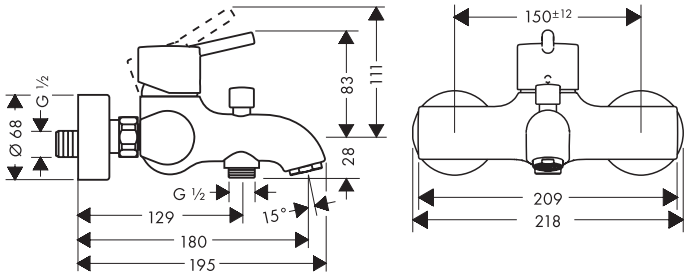

Talis S
32620007

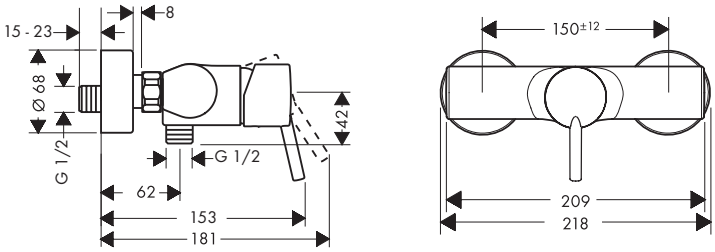

Talis S
72400007

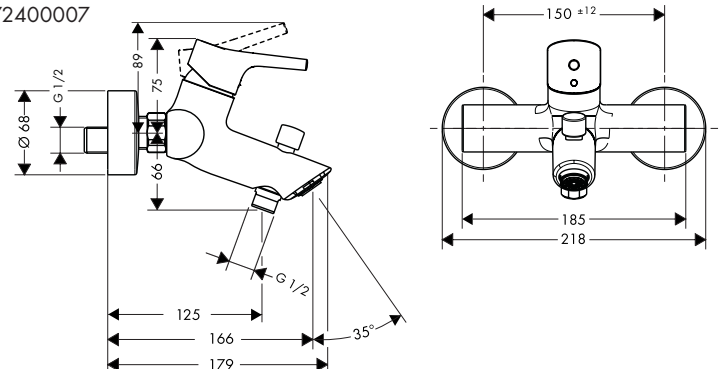

Talis S
72600007

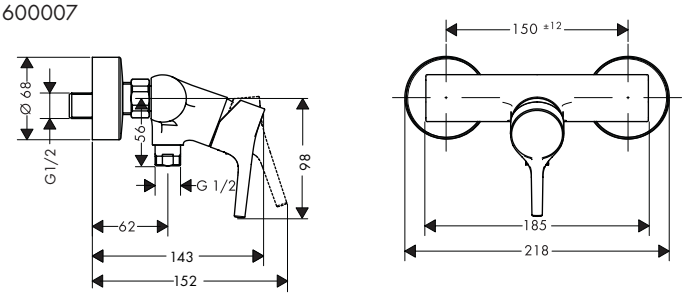

Talis E
71740XX7

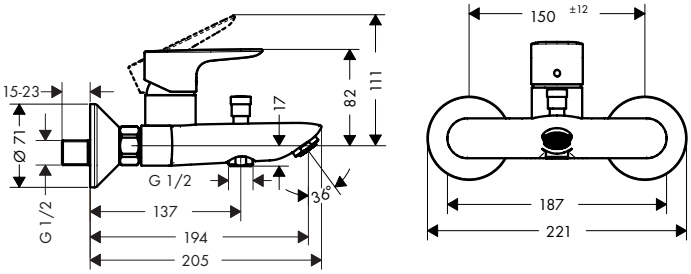

Talis E
71760007

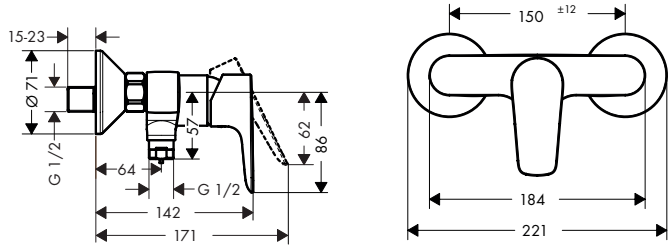

Novus
71040007

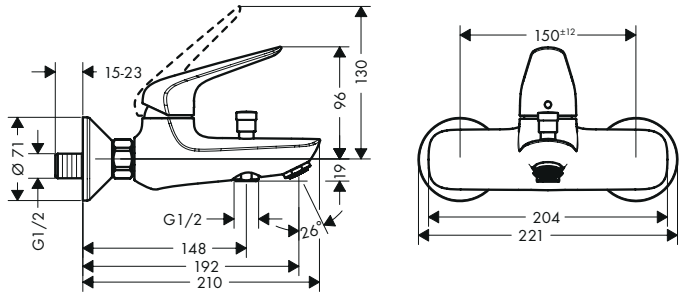

Novus
71060007

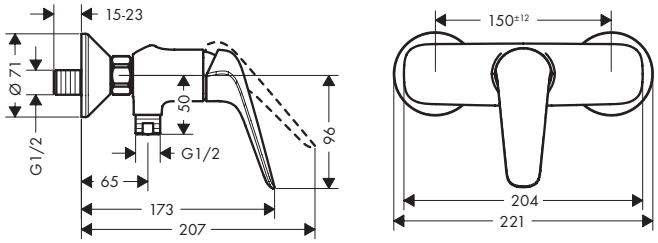

Logis
71400XX7

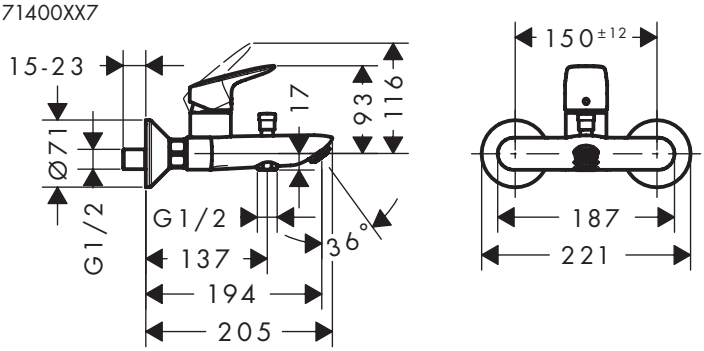

Logis
71600007

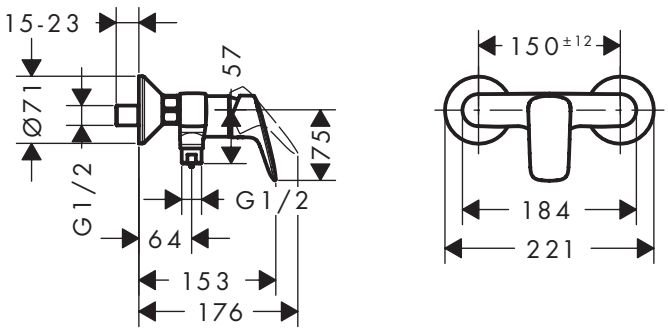

14410007 / 14440007 / 14461007 / 14470007 / 31480007 / 31740007 / 31742007 / 31748007 / 32420007 / 33144007

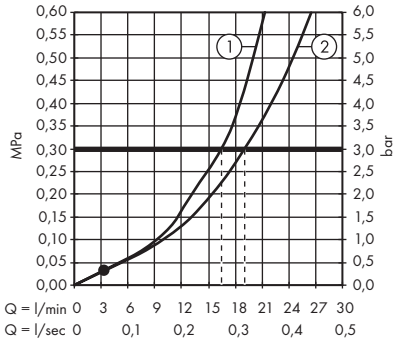

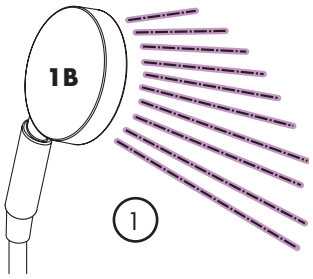

14661007 / 14670007 / 31660007 / 31662007 / 31680007 / 31760007 / 31762007 / 31960007 / 32620007 / 71600007 / 71760007 / 72600007 / 71060007

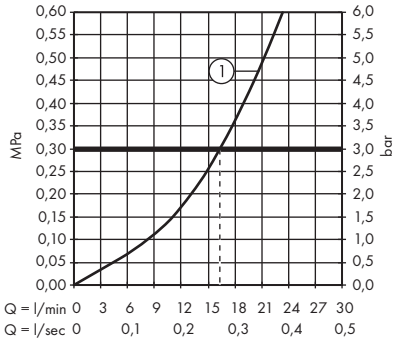

31460007 / 31642007 / 31940007 / 71740XX7 / 72400007 / 71040007

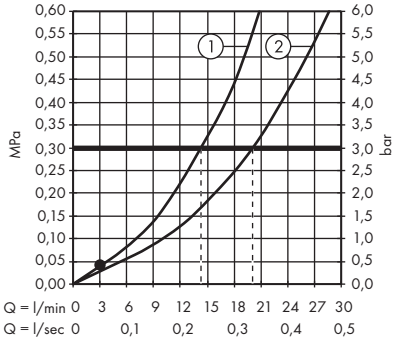

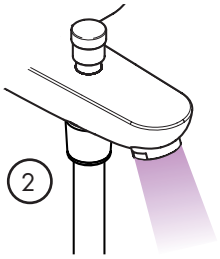

71400XX7

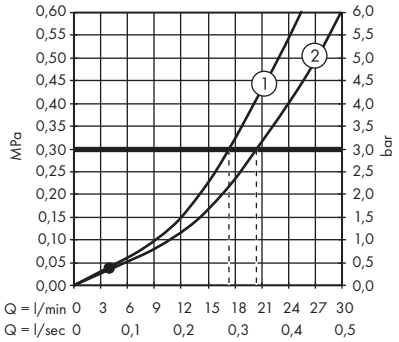

Metropol E
14470007

14094000
96338000
96656000
96690000
98156000
(36x2)
92730000
95008000
95140000
94078000
97738000
98163000
(15x2)
96922000
97220000
96157000
13956000
94077000

Metropol E
14670007

94140007
94140007
98163000
(15x2)
94135000
96922000
97220000
96157000
94135000
95008000
92730000
96690000
96656000
95140000
96338000
14094000

Metropol S
14461007

14895000
96338000
97406000
98193000
(32x2)
97209000
(M37x1,5)
92730000
95140000
95008000
96466000
97738000
98163000
(15x2)
96922000
97220000
96157000
13956000
94077000
98199000
(17x2)
98181000
(18x2)

Metropol S
14661007

94140007
94140007
96157000
98163000
(15x2)
96467000
96922000
97220000
92730000
96044000
95008000
97209000
(M37x1,5)
97406000
98129000
(14x2)
95140000
98193000
(32x2)
96338000
14895000

Metropol
14410007

14092000
96338000
94192000
94194000
95140000
92730000
94140007
95008000
97773000
98193000
(32x2)
98118000
(9x1,8)
94078000
97738000
98163000
(15x2)
94135000
96922000
97220000
96157000
13956000
94077000

Sportive 2
14440007

14897000
96338000
97406000
98193000
(32x2)
97209000
(M37x1,5)
94140007
92730000
95140000
95008000
96466000
97738000
98163000
(15x2)
94135000
96922000
97220000
96157000
13956000
94077000
98199000
(17x2)
98181000
(18x2)

Avista
31748007

31792000
96338000
96656000
98156000
(36x2)
96690000
(M43x1,5)
94140007
92730000
95140000
95008000
98163000
(15x2)
94078000
97738000
96157000
94135000
96922000
97220000
96157000
92360000
94077000
98199000
(17x2)
98181000
(18x2)

Metropol Puro
33144007

33092000
96338000
96656000
98156000
(36x2)
96690000
(M43x1,5)
94140007
92730000
95140000
95008000
96466000
97738000
98163000
(15x2)
96467000
97220000
96922000
96157000
13956000
94077000
98199000
(17x2)
98181000
(18x2)

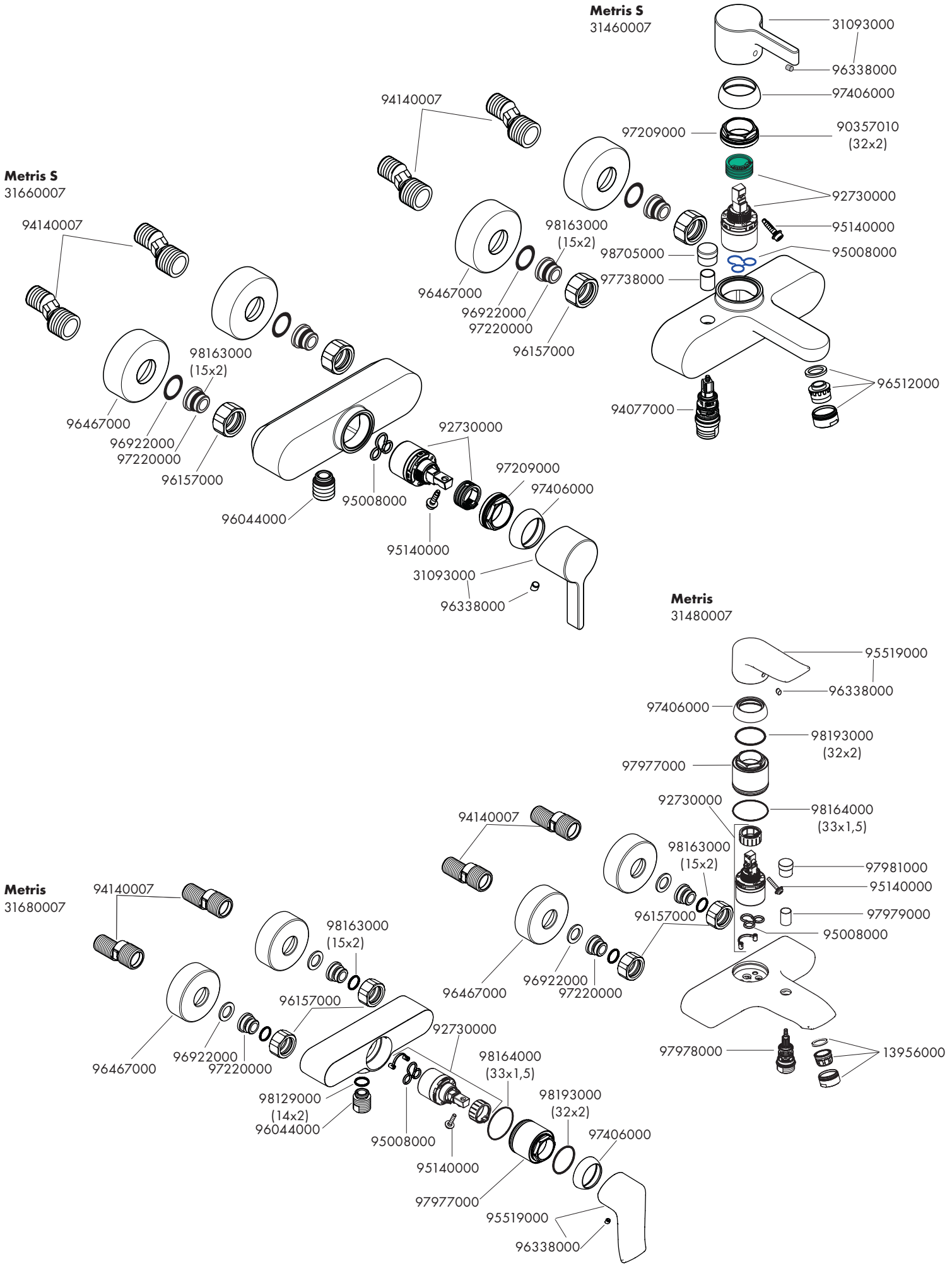
Metris S
31460007
31093000
96338000
97406000
97209000
90357010
(32x2)
92730000
95140000
95008000
98705000
97738000
98163000
(15x2)
96467000
96922000
97220000
96157000
96512000
94077000
94140007
Metris S
31660007
94140007
98163000
(15x2)
96467000
96922000
97220000
96157000
96044000
95008000
92730000
97209000
97406000
95140000
31093000
96338000
Metris
31480007
95519000
96338000
97406000
98193000
(32x2)
97977000
92730000
98164000
(33x1,5)
94140007
98163000
(15x2)
97981000
95140000
96157000
97979000
95008000
96467000
96922000
97220000
97978000
13956000
Metris
31680007
94140007
98163000
(15x2)
96157000
96467000
96922000
97220000
92730000
98164000
(33x1,5)
98129000
(14x2)
96044000
98193000
(32x2)
95008000
97406000
95140000
97977000
95519000
96338000

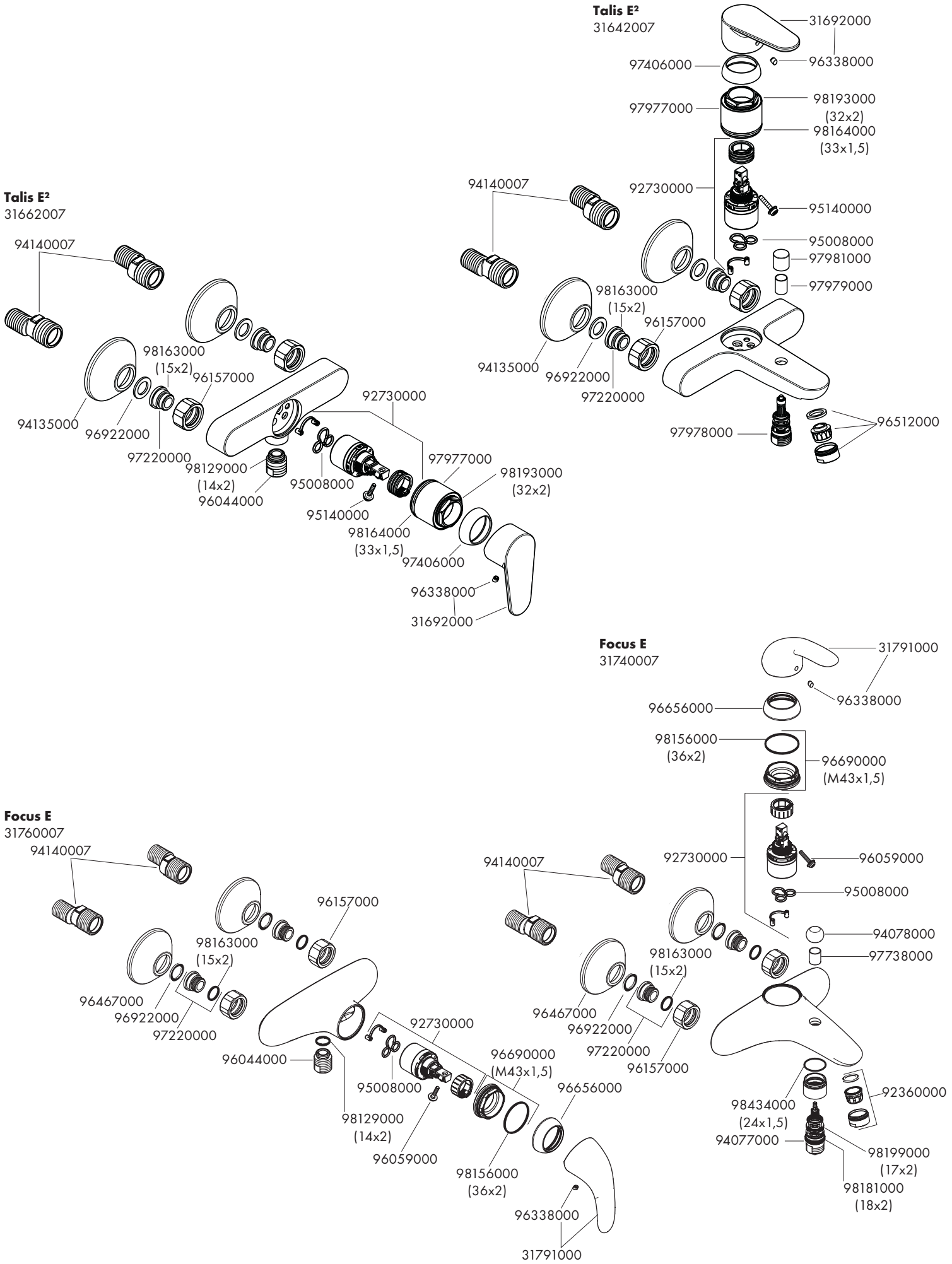
Talis E²
31642007
31692000
96338000
97406000
97977000
98193000
(32x2)
98164000
(33x1,5)
92730000
95140000
95008000
97981000
97979000
98163000
(15x2)
96157000
94135000
96922000
97220000
97978000
96512000
94140007
Talis E²
31662007
94140007
98163000
(15x2)
96157000
94135000
96922000
97220000
92730000
98129000
(14x2)
96044000
95008000
97977000
98193000
(32x2)
95140000
98164000
(33x1,5)
97406000
96338000
31692000
Focus E
31740007
31791000
96338000
96656000
98156000
(36x2)
96690000
(M43x1,5)
92730000
96059000
95008000
94078000
97738000
98163000
(15x2)
96467000
96922000
97220000
96157000
92360000
98434000
(24x1,5)
94077000
98199000
(17x2)
98181000
(18x2)
Focus E
31760007
94140007
96157000
98163000
(15x2)
96467000
96922000
97220000
96044000
92730000
95008000
98129000
(14x2)
96059000
96690000
(M43x1,5)
96656000
98156000
(36x2)
96338000
31791000

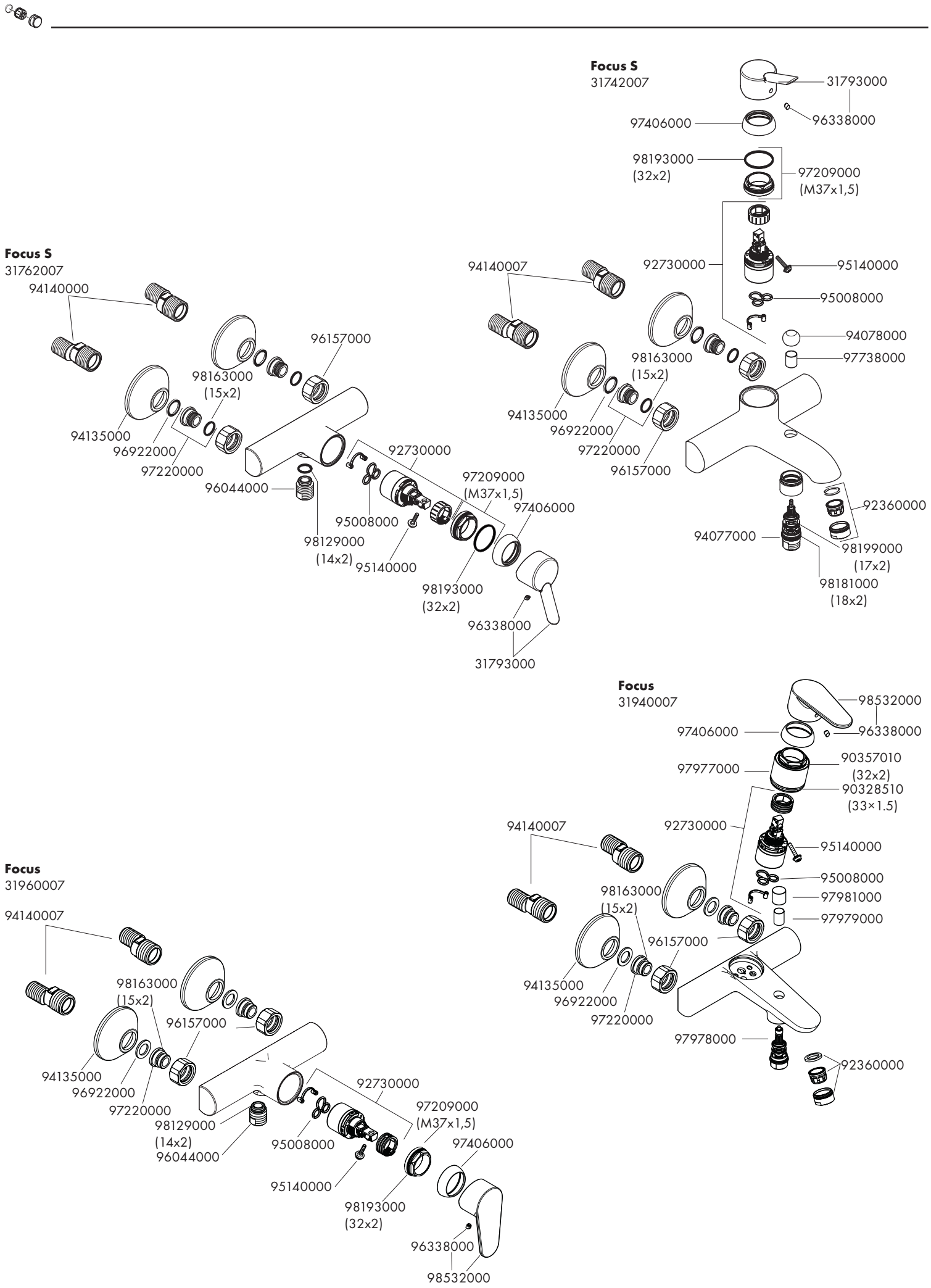
Focus S
31742007
31793000
96338000
97406000
98193000
(32x2)
97209000
(M37x1,5)
92730000
95140000
95008000
94078000
97738000
98163000
(15x2)
94135000
96922000
97220000
96157000
92360000
94077000
98199000
(17x2)
98181000
(18x2)
Focus S
31762007
94140000
94140007
96157000
98163000
(15x2)
94135000
96922000
97220000
92730000
96044000
97209000
(M37x1,5)
97406000
95008000
98129000
(14x2)
95140000
98193000
(32x2)
96338000
31793000
Focus
31940007
98532000
97406000
96338000
97977000
90357010
(32x2)
90328510
(33×1.5)
94140007
92730000
95140000
95008000
98163000
(15x2)
97981000
97979000
96157000
94135000
96922000
97220000
97978000
92360000
Focus
31960007
94140007
98163000
(15x2)
96157000
94135000
96922000
97220000
92730000
98129000
(14x2)
96044000
97209000
(M37x1,5)
95008000
97406000
95140000
98193000
(32x2)
96338000
98532000

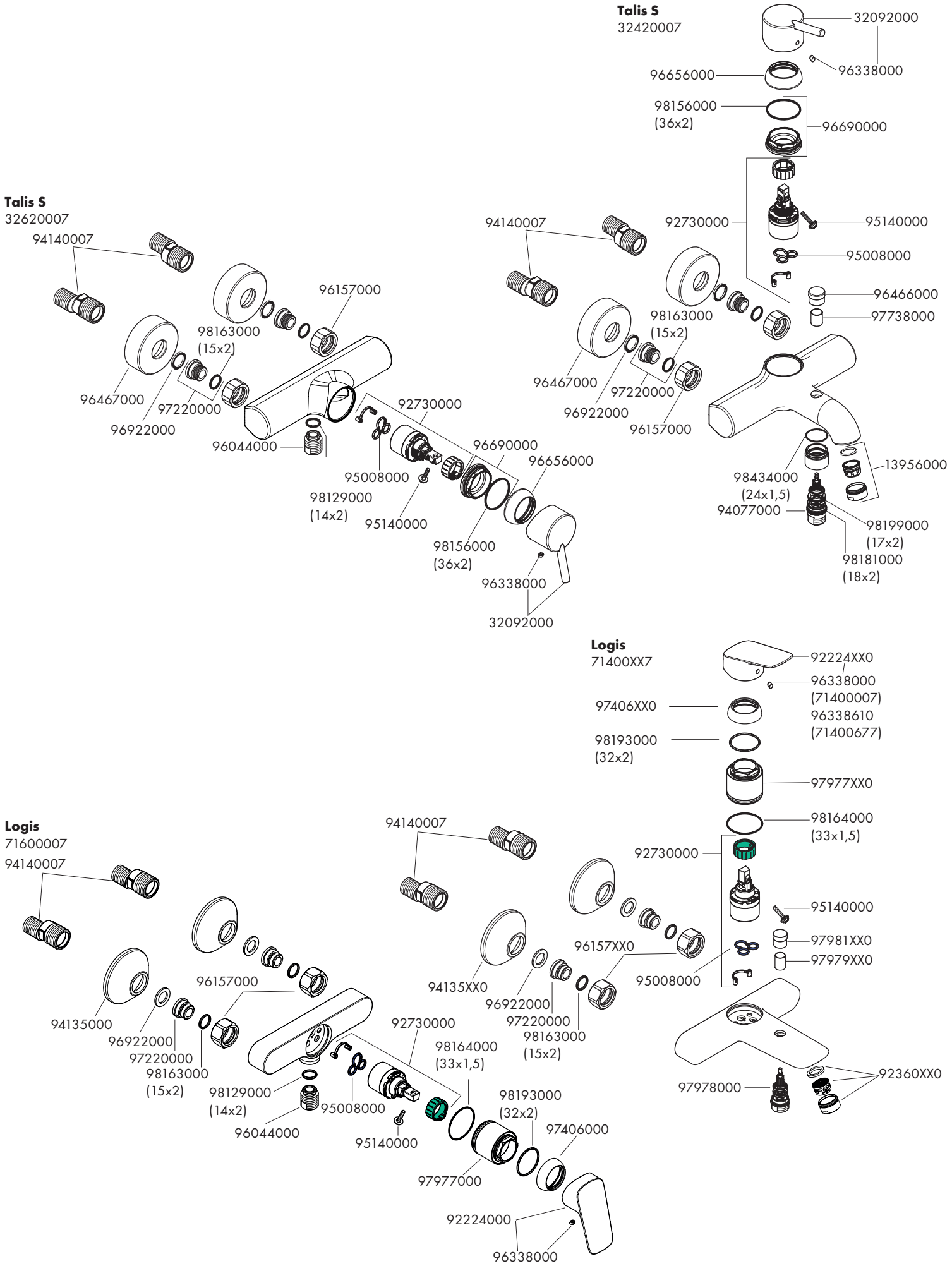
Talis S
32420007
32092000
96338000
96656000
98156000
(36x2)
96690000
92730000
95140000
95008000
96466000
97738000
98163000
(15x2)
96467000
97220000
96922000
96157000
13956000
98434000
(24x1,5)
94077000
98199000
(17x2)
98181000
(18x2)
94140007
Talis S
32620007
94140007
96157000
98163000
(15x2)
96467000
97220000
96922000
96044000
92730000
95008000
98129000
(14x2)
95140000
96690000
96656000
98156000
(36x2)
96338000
32092000
Logis
71400XX7
92224XX0
96338000
(71400007)
96338610
(71400677)
97406XX0
98193000
(32x2)
97977XX0
98164000
(33x1,5)
92730000
95140000
97981XX0
97979XX0
95008000
96157XX0
94135XX0
96922000
97220000
98163000
(15x2)
97978000
92360XX0
Logis
71600007
94140007
94140007
96157000
94135000
96922000
97220000
98163000
(15x2)
98129000
(14x2)
96044000
95008000
95140000
92730000
98164000
(33x1,5)
98193000
(32x2)
97406000
97977000
92224000
96338000

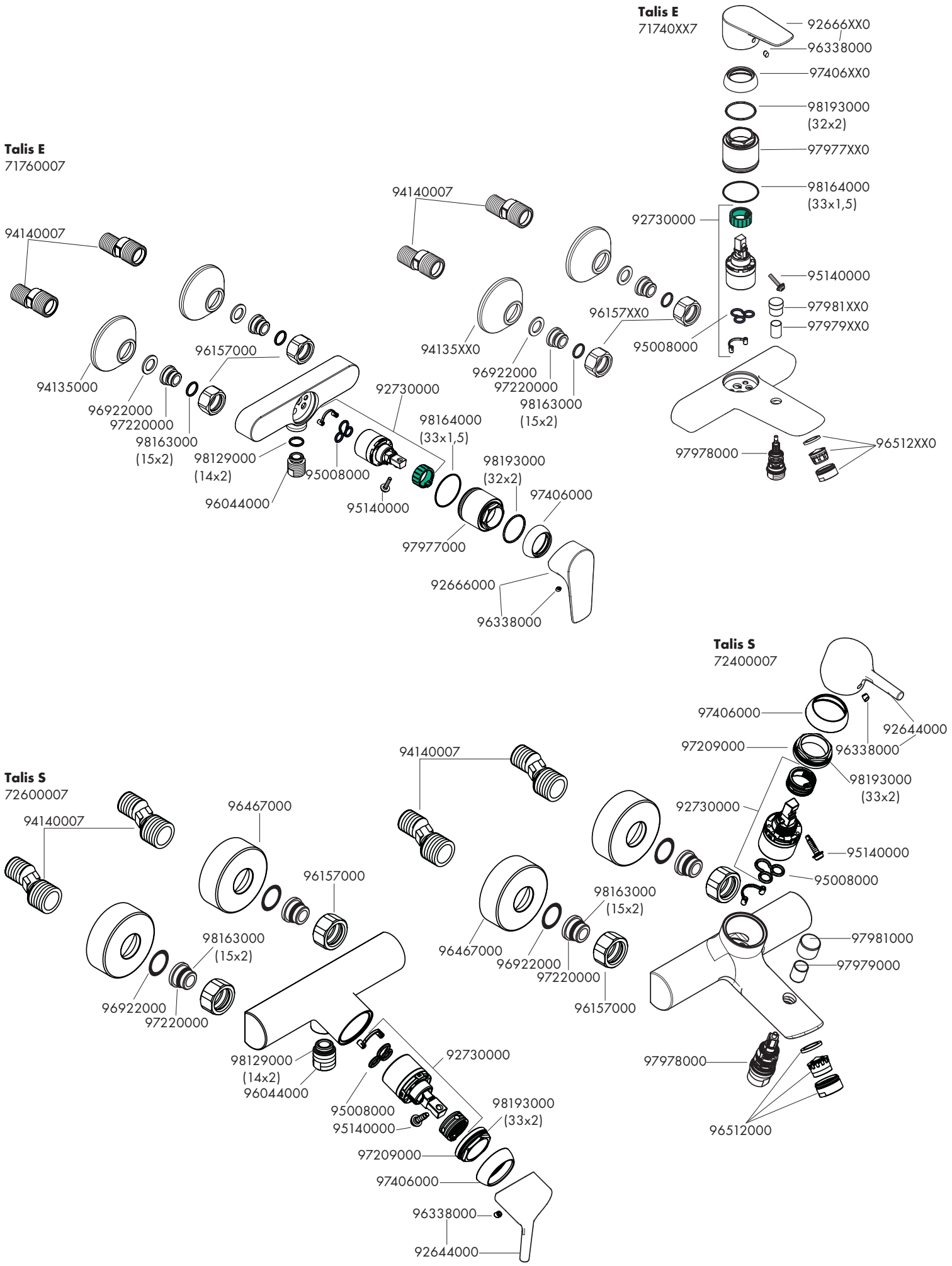
Talis E
71740XX7
92666XX0
96338000
97406XX0
98193000
(32x2)
97977XX0
98164000
(33x1,5)
92730000
95140000
97981XX0
97979XX0
95008000
96157XX0
96512XX0
97978000
Talis E
71760007
94140007
94140007
94135000
96922000
97220000
98163000
(15x2)
96157000
98129000
(14x2)
96044000
95008000
95140000
92730000
98164000
(33x1,5)
98193000
(32x2)
97406000
97977000
92666000
96338000
94140007
94135XX0
96922000
97220000
98163000
(15x2)
Talis S
72400007
97406000
92644000
97209000
96338000
98193000
(33x2)
92730000
95140000
95008000
97981000
97979000
97978000
96512000
Talis S
72600007
94140007
96467000
96157000
98163000
(15x2)
96922000
97220000
98129000
(14x2)
96044000
95008000
95140000
92730000
98193000
(33x2)
97209000
97406000
96338000
92644000
94140007
96467000
96922000
97220000
98163000
(15x2)
96157000

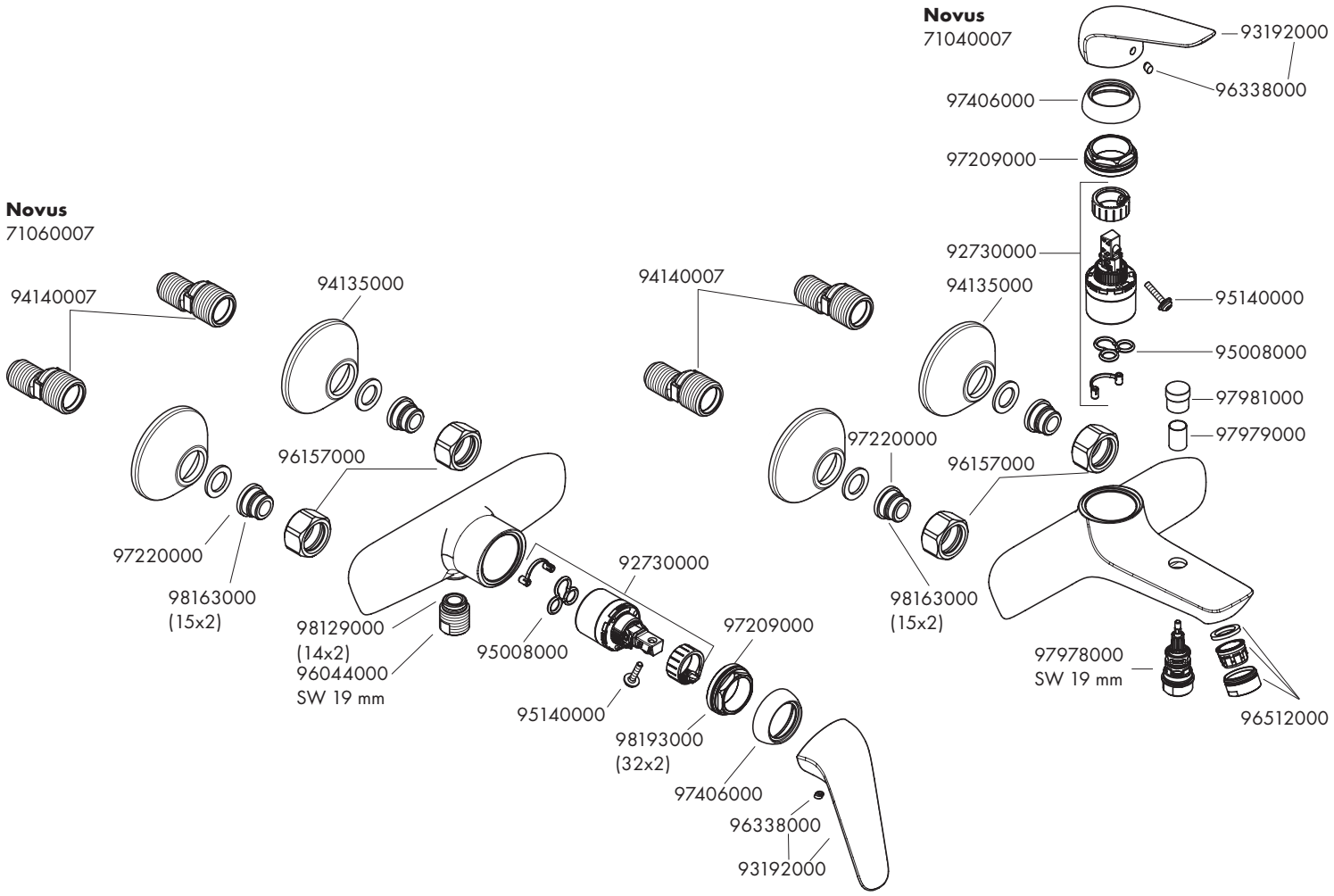
Novus
71040007
93192000
96338000
97406000
97209000
92730000
95140000
95008000
97981000
97979000
97978000
SW 19 mm
96512000
Novus
71060007
94140007
94135000
96157000
97220000
98163000
(15x2)
98129000
(14x2)
96044000
SW 19 mm
95008000
92730000
95140000
98193000
(32x2)
97209000
97406000
96338000
93192000
94140007
94135000
97220000
96157000
98163000
(15x2)

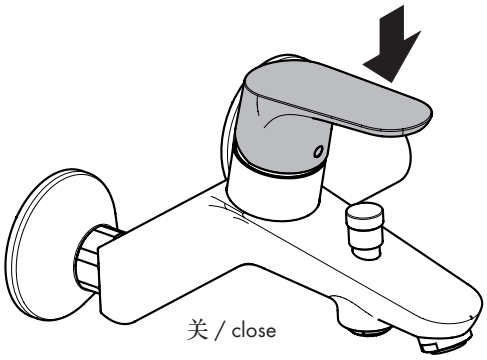
关 / close

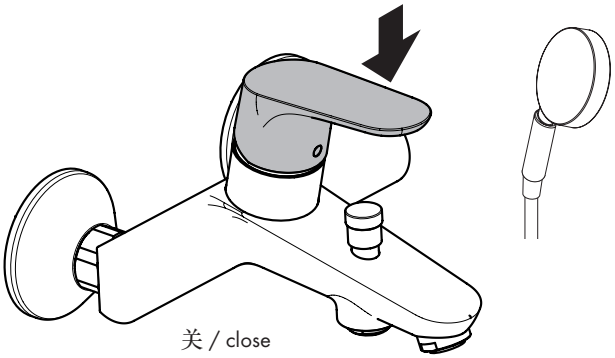
关 / close

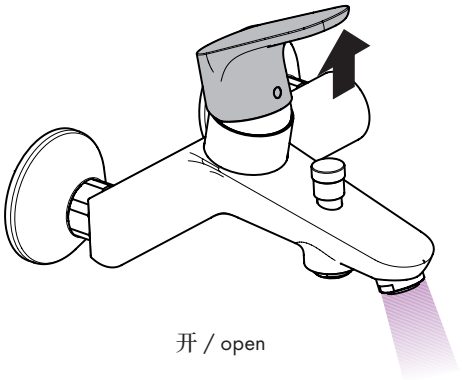
开 / open

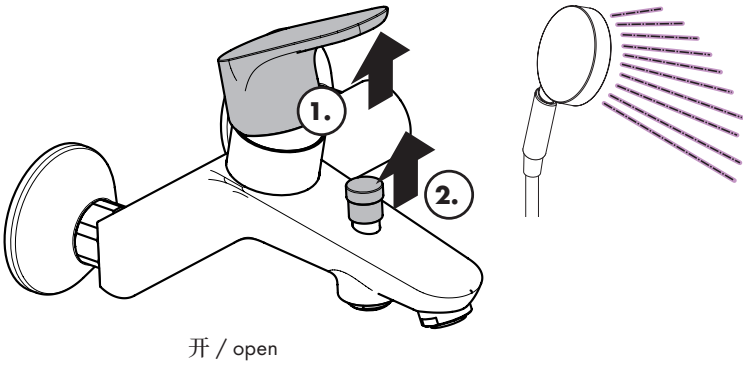
1.
2.
开 / open

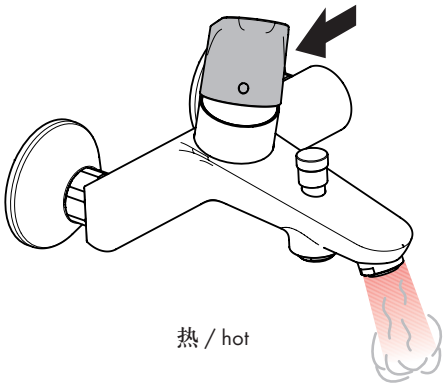
热 / hot

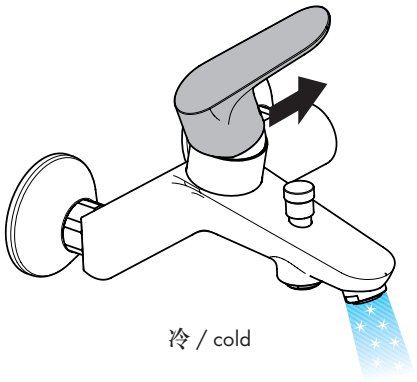
冷 / cold

汉斯格雅产品的清洁建议

现代的卫浴龙头, 厨房龙头, 花洒, 配件, 盥洗台, 浴盆和加热器采用的制造材料非常迥异, 以适应产品外形设计和使用功能的市场需求.

为了避免产品损坏和由此引发的投诉及争议, 必须在使用和清洁产品时遵循有关规程.

在保养汉斯格雅产品时, 原则上必须注意:

- 只能使用那些有明确注明是适用于本产品的清洁剂.
- 不允许使用含有盐酸, 蚁酸, 氯漂或醋酸的清洁剂, 因为这些清洁剂会给产品表面造成严重的损伤.
- 含磷酸的清洁剂必须在特定条件下使用.
- 不允许将两种以上清洁剂混合使用.
- 不允许使用具有研磨作用的清洁工具和设备, 如不适合的清洁粉末, 海绵垫或超细麦克布.
- 必须严格遵守清洁剂生产厂商的使用说明.
- 严格遵守清洁剂的用量和作用时间, 决不允许清洁剂的作用时间长于规定值.
- 定期的清洁以预防水垢.
- 不允许将清洁剂直接喷射到汉斯格雅产品上, 因为喷雾会进入汉斯格雅产品的开口部分和缝隙中而造成损害. 首先将清洁剂喷在软布上, 再用软布进行清洁.
- 清洁之后必须用足够的清水冲洗, 以彻底去除残留的吸附物(清洁剂).
- 不允许使用蒸汽清洗机, 高温会损害产品.

重要说明

肥皂, 洗发水, 沐浴液, 染发剂, 香水, 刮胡水, 指甲油的残留也会对产品造成损伤.

此处: 使用后要小心地用清水将剩余物冲洗干净.

同样在产品下方不得存放洗涤剂和化学药品, 例如不可放在用于洗脸盆的梳洗柜中否则挥发气体将损坏产品.

在已经损伤的表面继续使用清洁剂会给表面造成更大的损伤.

表面损坏的部件必须更换, 否则会有受伤的危险.

不按规定进行清洁而造成的任何损坏不在本公司产品保修范围之内.

担保

Hansgrohe 向用户保证, 该产品无制造 缺陷. 如果自购买之日起五年内出现缺 陷, Hansgrohe 将免费排除. 保证条件和详 情见 www.hansgrohe-int.com/guarantee. 在提 出保修的权利时请联系您的合同方. 本保证 不涉及有关国家法律规定的消费权

QuickClean

有了QuickClean, 手工清洁功能, 要去掉喷头上的水垢, 只需简单地搓除即可.

Cleaning Recommendation for Hansgrohe Products

Today, modern sanitary and kitchen tapware, showers, accessories, washstands, tubs and radiators consist of very different materials to comply with the needs of the market with regard to design and functionality.

To avoid damage and reclamations, it is necessary to consider certain criteria when cleaning.

With regard to caring for the Hansgrohe products, the following must in principle be heeded:

- Only use cleaning material which is explicitly provided for this type of application.
- Never use cleaning materials, which contain hydrochloric acid, formic acid, chlorine pale lye or acetic acid, as they cause considerable damage.
- Phosphorus acidic cleaners are only conditionally applicable.
- Mixing cleaning agents is not permitted, generally.
- Never use cleaning materials or appliances with an abrasive effect, such as unsuitable cleaning powders, sponge pads or micro fibre cloths.
- The instructions of the cleaning agent manufacturers have to be followed absolutely.
- Cleaning has to be carried out with a specified cleaner dosage, contact time, object-related and adapted to the needs.
- The building up of calcifications has to be removed by cleaning regulary.
- When using spray cleaners, spray the cleaning solution onto a soft cloth or sponge, never directly onto the Hansgrohe products, as the atomised spray could enter openings and gaps in the Hansgrohe products and cause damage.
- After cleaning rinse thoroughly with clean water to remove any cleaner residue.
- The use of steam cleaners is not permitted. The high temperatures can damage the products.

Important

Residues of toiletries such as liquid soaps, shampoos and shower gels, hair dyes, perfumes, aftershave and nail varnish can also cause damage.

Here too: Carefully rinse with water after use to remove residues.

Likewise, do not store any cleaning agents or chemicals under the products, for example in a vanity unit, as the vapours may damage the products.

The damage of already damaged surfaces will deteriorate under the effect of the cleansers.

Components with damaged surfaces must be exchanged, otherwise there could be an injury danger.

Damage caused by improper treatment will not be covered by our guarantee.

Warranty

Hansgrohe guarantees to the consumer that this product is free of production faults. If evertheless any defect is detected within 5 years from date of purchase, Hansgrohe will remedy this defect free of charge. You will find the conditions and details of this guarantee at www.hansgrohe-int.com/guarantee. Please contact your contracting party to claim your rights under this guarantee. This guarantee does not affect the customer's rights under the respective national legislation.

QuickClean

The QuickClean cleaning function only needs a small manual rub over to remove the lime scale from the spray channels.

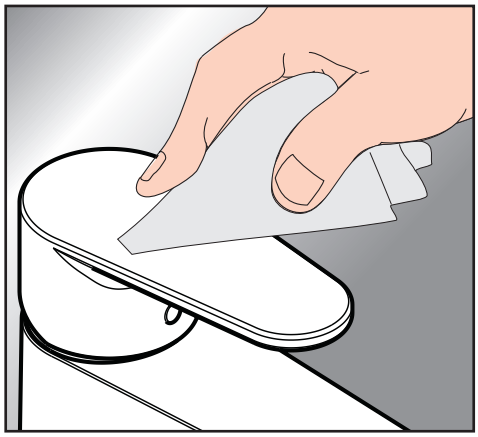

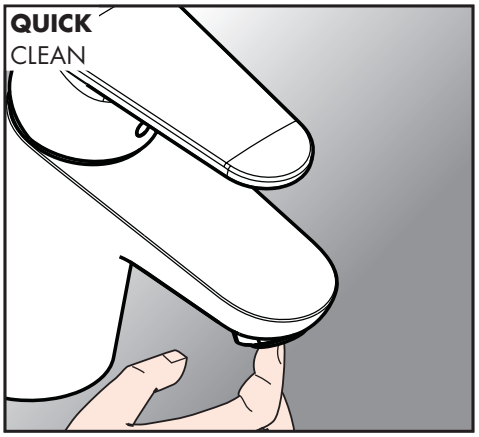

hansgrohe
Hansgrohe · Auestraße 5 – 9 · D-77761 Schiltach · Telefon +49 (0) 78 36/51-1282 · Telefax +49 (0) 7836/511440
E-Mail: info@hansgrohe.com · Internet: www.hansgrohe.com

02/2023
9.02845.06