hansgrohe



Price Book 2020/2021

hansgrohe assortment bath and kitchen

Hansgrohe contact

Hansgrohe Headquarters

The Hansgrohe Master Service - Headquarters

Service hours:
Monday-Thursday: 8:00 am - 4:00 pm
Friday: 8:00 am - 3:00 pm

Phone: +49 7836 51-1282
Fax: +49 7836 51-1440
info@hansgrohe.com

You will also find technical information at
pro.hansgrohe-int.com

Global Projects Services - Headquarters

gpservices@hansgrohe.com

You will also find tender texts and planning details at
pro.hansgrohe-int.com/planning-data

Hansgrohe Aquademie - Headquarters

Monday-Friday: 7:30 am - 7:00 pm
Saturday-Sunday: 10:00 am - 4:00 pm

Hansgrohe SE
Hansgrohe Aquademie
Auestr. 9
77761 Schiltach/Germany
Phone: +49 7836 51-3272
Fax: +49 7836 51-1505

The Aquademie is our adventure centre on all aspects of water.
pro.hansgrohe-int.com/aquademie

The prices quoted are recommended retail prices and do not include VAT. Errors and omissions excepted.
This Price Book renders all preceding ones void.

Measurements within scale drawings are in mm.

You will find further information and sales arguments on the individual products in the sales manual or at pro.hansgrohe-int.com

Price Book 2020/2021

hansgrohe

Hansgrohe SE · P.O. Box 1145 · *77757* Schiltach/Germany
Tel. +49 7836 51-0 · Fax +49 7836 51-1300
info@hansgrohe.com · www.hansgrohe.com

Index

hansgrohe because	8
Service	18
Sponsoring	22
Showers and shower controls	24
Spray modes	30
Technologies	32
Phase out products	36
New products	37
Index price brackets	38
Packaging units	39
Code numbers	46

Overview of showers

Hand showers 65
Rainfinity | Raindance Select | Croma Select | PuraVida | Raindance Classic | Croma

Shower sets / Shower bars / Shower holder 77

Shower hoses and Accessories 131

Overhead showers 135
Rainfinity | Rainmaker Select | Raindance Select | Croma Select | PuraVida | Raindance Rainmaker | Raindance Rainfall | Raindance | Raindance Classic | Croma E | Croma | Crometta | Clubmaster

Showerpipes and shower panels 175

Thermostatic mixers / valves 217
Ecostat exposed | ShowerTablet Select | ShowerTablet | RainSelect | ShowerSelect
Ecostat concealed | Valves

iBox® universal 263

Overview of mixers

PuraVida® 275

Metropol® 291
Metropol | Metropol Classic

Metris® 325
Metris | Metris S

Talis® 347
Talis Select E | Talis E | Talis Select S | Talis S

Focus® 381

Novus® 397

Logis® 411

Electronic- and project mixers / Care assortment 427
PuraVida | Metropol | Metris | Talis | Focus | Novus | Logis

Accessories 449
Rainfinity | Logis | Unica Comfort | Logis Universal | RainScent

Wastes and overflow 459

Kitchen mixers 473

Spare Parts and Accessories 559
Showers | bath mixers and kitchen mixers

Flowcharts 581

HANSGROHE BECAUSE

Meet the beauty of water.

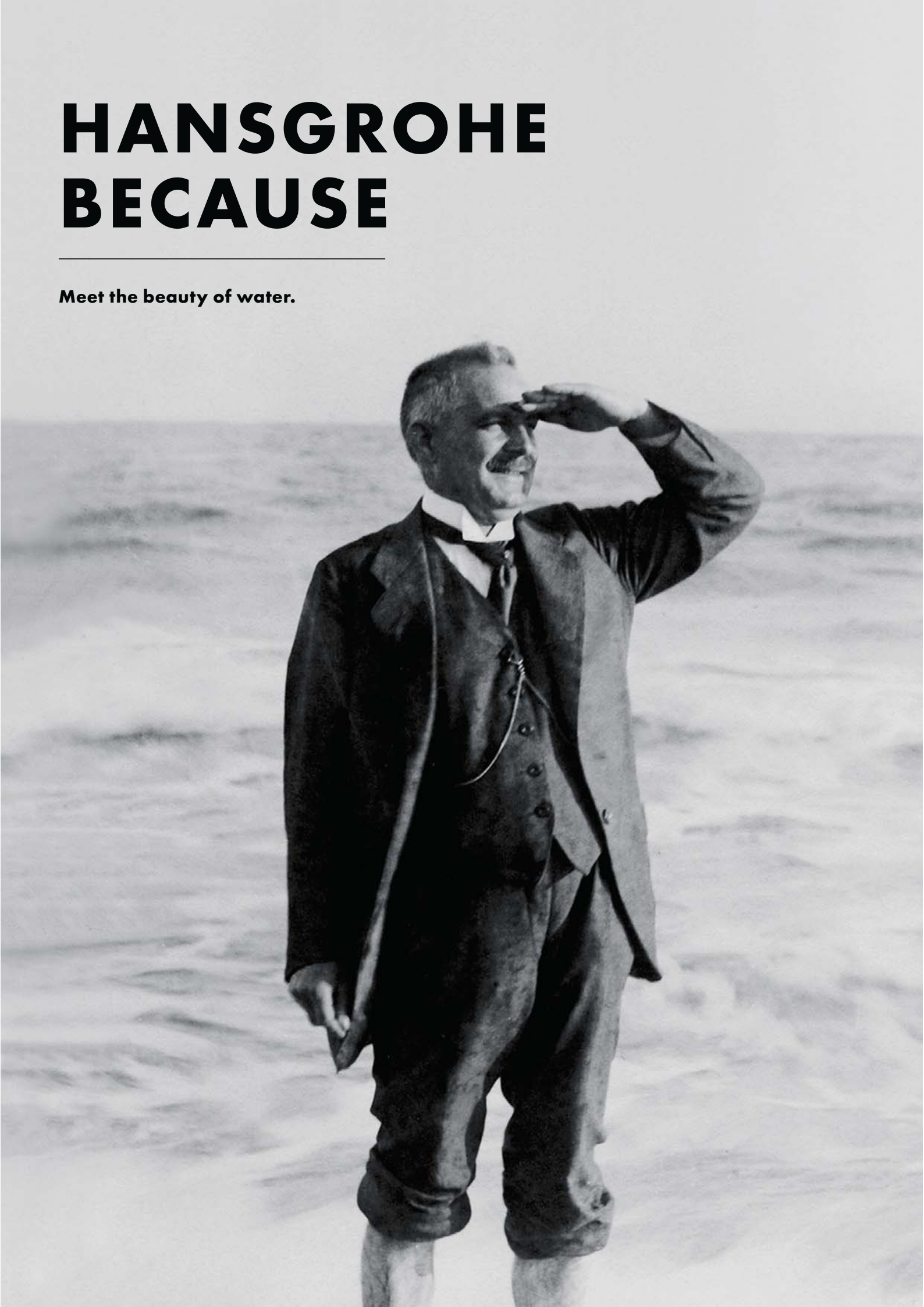

Water moments that delight

From the outset we blazed a trail in the handling of water

At hansgrohe, we stand for modern design and refreshingly high quality products. For 118 years, we've been shaping the landscape of bathrooms and kitchens to make life easier, better and more beautiful for you. To this day, we continue to make most of our products in the heart of the Black Forrest – as a commitment to our Engineered in Germany" quality guarantee, ensuring the best products for you. Our determination to enhance the beauty of water and every aspect of your experience knows no bounds. Innovation combined with brilliantly simple, ultra-reliable technology ensures we create timeless and sophisticated products. hansgrohe: innovative in any era since 1901.



1901
founded



Customer-oriented



Sustainable



55
sites worldwide



22
sales offices



33
companies



143
countries supplied to on all continents



Innovation
Pioneers in the industry



Design
More than 600 awards



Quality
Made in Germany

Excellence in innovation, design, quality and service

hansgrohe: our name is your guarantee

Innovation

- **Revolutionary innovations**
- **Pioneers in the sanitation industry**
- **Ground-breaking technologies**

At hansgrohe, we don't just innovate, we revolutionise. Some of our product developments have made history in the industry and changed how people all over the world encounter water, every day. We care deeply about you and your enjoyment of our products, in both aesthetics and performance. We have our own dedicated research and development laboratory in the centre of the German Black Forest. Here, our industry experts have worked to produce more than 15,000 active patents, ensuring that hansgrohe remains an industry leader and achieving a TOP 100 award for Top Innovator 2018.

For more on innovation, see page 12

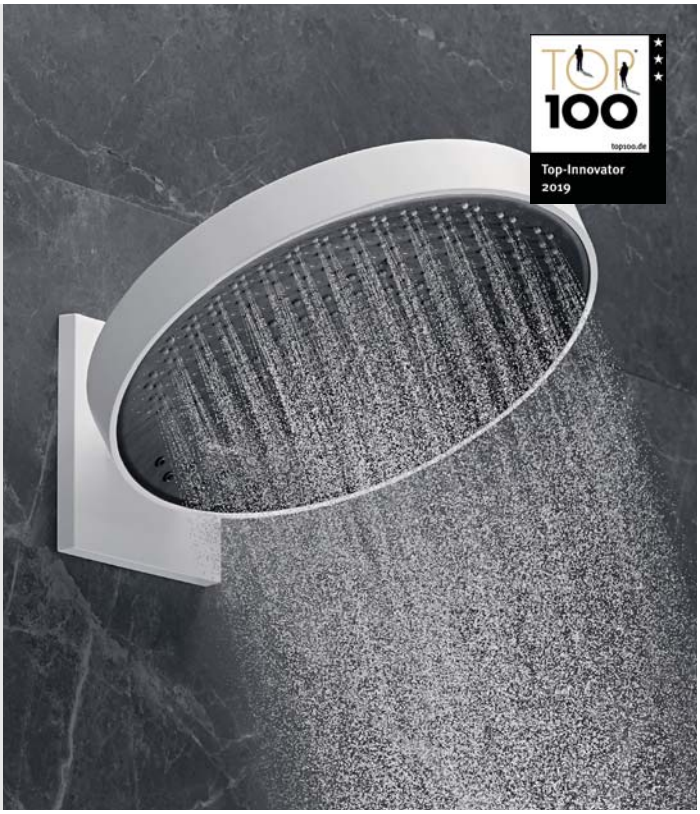



Design

- **More than 600 awards**
- **A design for every style**
- **International reference projects**

Design can be defined in a number of ways: shape, aesthetic, style. But, at hansgrohe, good design means more than just good looks. As well as world-class appearance, our influential designers also focus on quality and maximum customer benefit. It's our unwavering attention to detail that has earned more than 600 internationally renowned awards. From the big picture to the small details, we take every opportunity to make your bathroom experience the best it can be with our technical innovations. Whether it's Modern, Classic or Avant-garde, we have the perfect solution to suit any need and, most importantly, our timeless designs will outlive fast-paced fashion trends.

For more on design, see page 14

Quality

- **Experts since 1901**
- **Made in Germany**
- **5 year guarantee***

Since 1901, people all over the world have put their trust in hansgrohe's durable products from the heart of the German Black Forest. hansgrohe is synonymous with high-quality products of exceptional design, ease of use and intelligent functions. Since our foundation, 'Engineered in Germany' has been a recipe for success and remains an integral part of our philosophy. This level of German expertise is recognised as a guarantee of excellence and every one of our facilities works to the high standards that we set. As testament to this, we offer a 5-year guarantee* and hold spare parts for discontinued products for a further 15 years.

For more on quality, see page 16

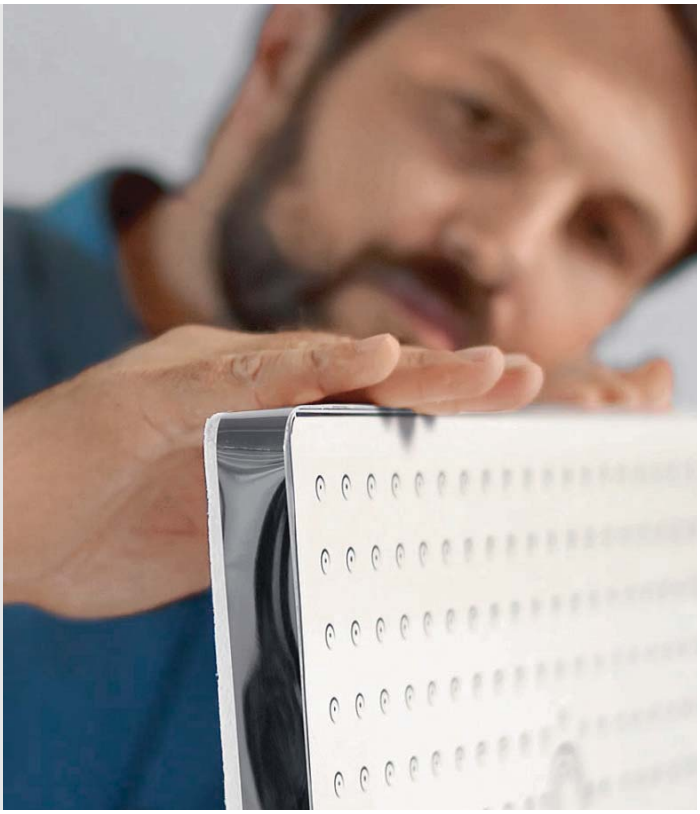



Service

- **Contactable and reliable**
- **Informative and involved**
- **Plan and enjoy**

Customer satisfaction has, and always will be, our primary concern. At hansgrohe, we want to work in partnership with you to ensure the best possible solution. Being able to deliver top-quality, personal service to our customers at all times is a key part of how we operate as a company. No matter the question, problem or special request, we are here to help.

For more on service, see page 18

This guarantee applies to all hansgrohe products, with the exception of a few digital products in selected countries.
Further conditions, details and article numbers are listed at **www.hansgrohe.com/service/producer-guarantee**

Looking ahead, going ahead

Innovation – overflowing with ideas

Without hansgrohe, the modern bathroom would be unrecognisable. Our company founder, Hans Grohe, revolutionised the space with his inventions, pioneering spirit and craftsmanship. His ground-breaking innovations include the hand shower, the shower rail, Select technology and the one-of-a-kind PowderRain spray. More than a century after the company was founded, meticulous detail is still our driving force. Our bathroom and kitchen specialists in the German Black Forest are never content with the status quo



1928
Hand shower

The first shower with a white porcelain handle. This hansgrohe innovation made showering affordable for many households for the first time.



1953
Shower bar Unica

Thanks to this revolutionary idea, hand showers could be mounted at a required height.



1968
Selecta

The world's first glass finish hand shower with adjustable spray modes.



1974
Tribel

First design award winning hand shower in many colours and with three spray types.



1981
ALLEGROH

The first mixer with the new lever handle, swivel spout and innovative ball mix technique.



1981
ALLEGROH

The first single lever kitchen tap with pull-out spray.



2007
EcoSmart

EcoSmart taps and showers consume up to 60% less water than conventional products. Climate protection starts in the bathroom.



2009
PuraVida

Pioneering design with DualFinish in white/chrome; international award winner thanks to the sculptural looks and technical features.



2011
ComfortZone

Various spout heights provide greater freedom of movement in the bathroom.



2011
Raindance Select

First Raindance hand shower with Select technology for spray changes.



2012
CoolStart

User-friendly, energy-saving technology where only cold water flows when the handle is in the central position.



2014
Metris

The world's first kitchen tap with Select function.

and are constantly striving to provide our ever-evolving customers with more attractive, more comfortable and more exhilarating products. We always seek to futureproof our innovations so that, not only our design will outlive fast-paced trends, but so our technology will too. With a wealth of exwperience behind us, the future never feels too far away.



1986
Aktiva

The first hand shower with the QuickClean anti-limescale function.

1987
Mistral Eco

New technology helps to save up to 50% water. This makes hansgrohe a 'green' industry pioneer.

1997
Boltic

Patented handle lock protects against handle wobbles – even after years.

2001
iBox universal

First and only basic set for all standard and thermostat solutions – a revolution in concealed installation.

2003
Raindance

The first hand shower with an XXL shower head, flat silhouette and short handle. The all-rounder becomes a trendsetter.

2004
Raindance Air

The first hand shower with AirPower technology. AirPower infuses water with air, makes droplets full-bodied and is water efficient.



2015
Talis Select

First basin mixer with Select technology. Water is turned on and off at the touch of a button.

2018
PowderRain

Spectacular showering with softly enveloping micro-droplets.

2019
CoolContact

Prevents the housing from heating with the controlled flow of cold water. For even safer showering.

2019
sBox Bath

Practical hose coiling system for a tidy look and more convenience.

2019
FinishPlus

High-quality finishes provide a variety of design options.

2019
Rainfinity

The ultimate in showering indulgence. The new dimension in showering.

Distinguished in many respects

Multi-award-winning design

Design isn't just a matter of taste. It's an attitude. The search for the most intelligent solution is always a goal for us. After all, design and functionality must go hand in hand in order to create products with stunning, extraordinary quality that redefine aesthetic standards. As such, we are constantly working on outstanding creations in collaboration with the Phoenix Design team, who have won a whole host of international awards. Our products are timeless, beautiful and highly functional. The awards that we receive year in, year out from international panels of experts make us a leading designer in the industry. Our products have already won more than 600 awards and 50 international design prizes, including the iF Design Award; one of the world's most prestigious design awards.





Phoenix Design has been shaping the face of hansgrohe for more than 30 years. The Stuttgart-based team exclusively curate designs for the entire shower and tap range. Over the past few decades, the team have been responsible for a long line of products featuring both technological and visual sophistications that will continue to enhance the beauty of water for years to come.

hansgrohe is all about revered design:

product design award

reddot design award

GERMAN INNOVATION AWARD '20 GOLD

GERMAN DESIGN AWARD

INNOVATIVE ARCHITECTURE best of best

INNOVATIVE INTERIOR winner

Best of the Best

DESIGN PLUS powered by: ISH

We received the first design award in our history in 1974 for the TRIBEL model; the first convertible hand shower with three different spray modes. Since then, numerous other international prizes have celebrated the successful combination of form and function in our products, as well as the highly sustainable electroplating method used to create the surface finishes on our showers and taps.

International reference projects

At home the world over

All over the world, developers and investors work hand in hand with architects and planners on sophisticated projects. They are constantly in need of intelligent and aesthetically appealing solutions for handling the essential element water. The mixers, showers and bathroom collections from the Black Forest lend top addresses that definite extra design and comfort: in impressive hotels and public buildings, in private residences and royal palaces, in exclusive sports clubs and in cruise ships and luxury yachts. For more inspiring examples visit **ispecify.hansgrohe.com**









Purple Haze, Nairobi, Kenya:
Focus single lever basin tap
Crometta S 240 1jet showerpipe
Copyright: Purple Haze

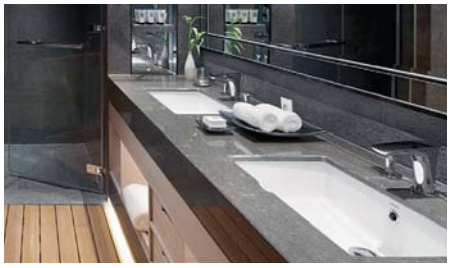

Signiel Seoul, Seoul, South Korea:
PuraVida 3-hole basin tap
Croma 100 Multi hand shower
Copyright: Signiel Seoul



Hotel Excelsior, Dubrovnik, Croatia:
Talis S single lever basin tap
Copyright: Hotel Excelsior



Ocean Estates, Da Nang, Vietnam:
Logis single lever basin tap
Croma Select S Vario shower set
Copyright: Ocean Estates



Privé at Island Estates, Aventura, USA:
Metris single lever basin tap
Raindance Select E 120 3jet hand shower
Copyright: Privé at Island Estates



Quantum of the Seas:
Metris single lever basin tap
Crometta 85 Vario shower set
Copyright: Quantum of the Seas

Satisfyingly high standards

Quality – clear benefits to quality workmanship

Since day one, the enjoyment of our products has been one of our main aims; perfection in form and function is, and has always been, our standard. At hansgrohe, quality means one thing above all else: high-class workmanship. Always creating the highest quality products defines our approach to modern design, manufacturing and performance. We only use the best materials and manufacture our products using state-of-the-art technology alongside human expertise to transform them into items with consistent and long-term value. Every product is tested by trained and experienced staff before dispatch. hansgrohe workmanship guarantees reliable added value for you, as well as our retail and specialist trade partners.

This guarantee applies to all hansgrohe products, with the exception of a few digital products in selected countries.
Further conditions, details and article numbers are listed at
www.hansgrohe.com/service/producer-guarantee



Firmly rooted in our home country
For almost 120 years, we've been loyal to our production site in Schiltach, Germany, and we remain one of the biggest employers in the region. Whilst our ambitions are global, our roots are local.



Inspiration on the doorstep
Tranquil lakes, clear streams and powerful waterfalls are all part of the German Black Forest's distinctive charm. We find fresh new ideas for innovative ways to work with water day after day here. Having the countryside on our doorstep shapes our mindset and constantly makes us more and more aware that we need to be responsible and sustainable whilst working with the most precious of resources. hansgrohe has spent decades as a pioneer and trailblazer of water and energy-saving technologies, as well as environmentally-friendly production.

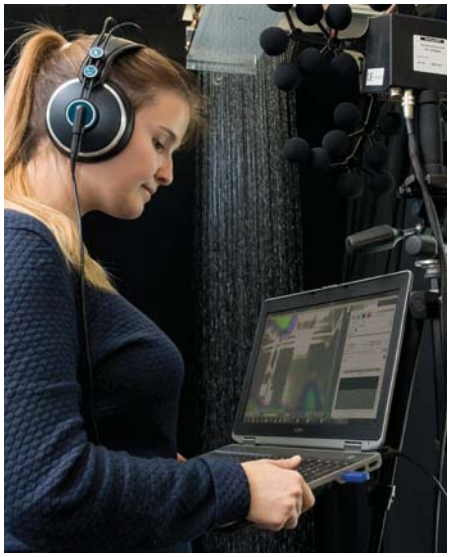

Water in its best form
Our experts develop the best spray for each product in our very own sound and spray laboratory. They always consider two key things that they know are important to you – ease of cleaning and water-efficiency.



Tradition meets innovation
Here at hansgrohe, we can build on the experience of three generations. With German engineering on our side, we can look to the future to create timeless, quality products using the latest production technologies.



Ultimately, it's the human factor that counts
hansgrohe produces to the highest technical standard, but the benchmark for our standards is set by people. So, every single product is carefully checked by a real person before it leaves the German Black Forest.

Genuine added value

Service – contactable and reliable

Customer satisfaction is always a priority at hansgrohe; we always offer our customers the best quality and service tailored to them as an individual. You can always rely on qualified technical and sales advice from our employees wherever you are, at all times. With hansgrohe you get service from professionals, for professionals.

Field Service

Our sales team will be by your side throughout your journey. A member of the team will always be on hand to answer any and all questions regarding our products.

In house Sales Service

You can phone, email or fax hansgrohe customer advisers for individual technical and commercial support.

Service hours
Monday – Friday: 9.00 am – 5.00 pm
Phone: +49 7836 51-0
Fax: +49 7836 51-1300
E-mail: info@hansgrohe.com

Technical Service

Our service specialists are trained engineers, so they are in an excellent position to deal with any technical issue you may encounter. If something cannot be explained on the telephone or via e-mail, you can even request an on-site visit from a specialist in building services.

Service hours
Monday – Friday: 9.00 am – 5.00 pm
Phone: +49 7836 51-1282
Fax: +49 7836 51-1440
E-mail: info@hansgrohe.com

Online spare parts shop

All parts in detail: The electronic spare parts catalogue lets you find and purchase spare and special parts with particular ease. In addition, you will benefit from other functions like dimension drawings, links between drawings and service parts, a checklist and downloads of installation and service instructions.
spares.hansgrohe.com

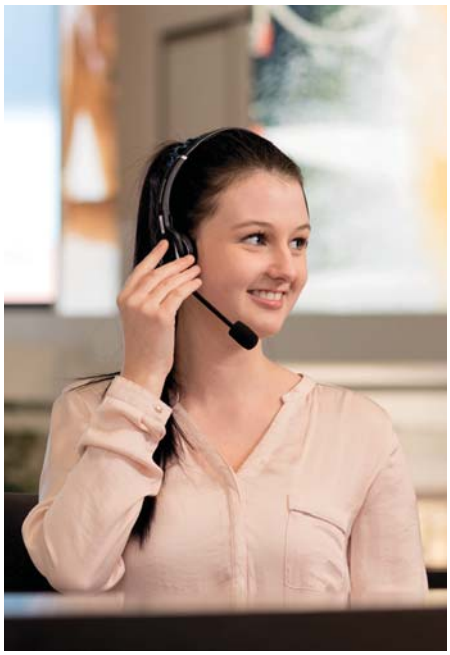

Special services and logistics

At hansgrohe, we will do all we can to satisfy your individual needs. Express delivery (no matter the distance), 24-hour spare parts service, excellent product availability, routineoptimised delivery, standardised cardboard packaging to make the ordering process and delivery as simple as possible plus a 5-year guarantee* and assurance that spare parts for discontinued products are held for a further 15 years all come as standard.

This guarantee applies to all hansgrohe products, with the exception of a few digital products in selected countries.
Further conditions, details and article numbers are listed at
www.hansgrohe.com/service/producer-guarantee

A recipe for success

Service – informative and involved

You need to be one step ahead of the competition if you want to remain at the cutting edge of product and technological development. This includes everything from the core businees to effective marketing, personnel management and further training. We prodvide a comprehensive range of support so that specialist partners always have the most up-to-date information and are best equipped with everything they need to deliver a service that matches our quality products.

Courses, training and events

Know-how for you: we offer a wide range of courses, training and events in the most diverse areas such as new technologies, modern marketing instruments or operational or personnel management. At our own training centre, the Aquademie in Schiltach or on-site anywhere in the country.
pro.hansgrohe-int.com/aquademie

Comprehensive information

Always up-to-date: hansgrohe partners receive regular information on new products, marketing campaigns, sales campaigns, courses, events and company news. We address all the target groups, be they retail, trade or projects, individually.

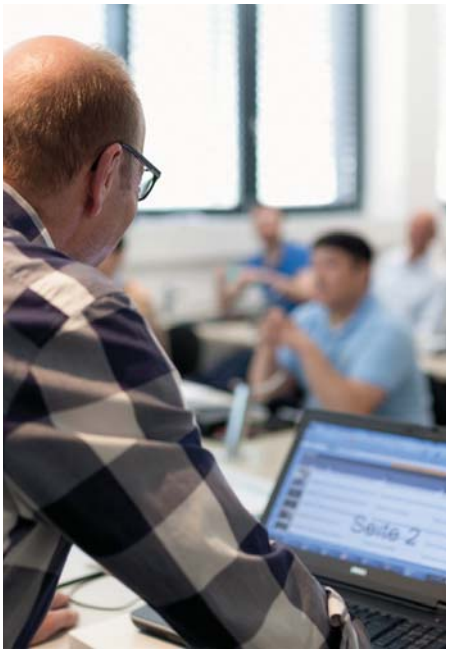

Website for professionals

We provide additional digital services on our website for specialist partners. For example: information on delivery periods, the online spare parts catalogue, Talisman account, price lists and marketing materials are just some of the benefits we offer. You can get the information you need, even if you are on-the-go or visiting a customer.
pro.hansgrohe-int.com

Good support

Service – planning and calculations

Whether you need help choosing the right combination of products, optimising the way planning data is arranged or optimising savings, we will provide you with support on everything you need to suceed, as well as costeffectively, plan and calculate your bathroom projects, including innovative digital solutions.

Planning data

We make a vast amount of information, such as dimensional drawings and 3D data, available online. For efficient building information modelling (BIM) across all trades, we supply all relevant data for key software applications. This includes geometry and positioning, materials and properties of the taps, showers, shower systems and installation technology.
pro.hansgrohe-int.com/service

ComfortZone test

Has your customer fallen in love with a tap, but is unsure whether it really goes with their wash basin? Do you want to know which of our taps match which wash basin? We'll support you and your customers with confidently stylish product pairings that have been technically reviewed in our Test Centre. You can find more information at
hansgrohe.com/comfortzone

Savings Calculator

With our savings calculator, you can work out how much you'll save with EcoSmart technology in your taps and shower. You can also use it to figure out how soon your investment will pay off. Experts can visit **pro.savings.hansgrohe-int.com.** Beginners can go to **savings.hansgrohe-int.com**



Project Support

Are you just about to start planning one or more bathroom projects and need help in planning the job or putting the work out to tender? Our project consultancy team would be happy to assist you.

Service hours
Monday – Friday: 7.30 am – 5.00 pm
Phone: +49 7836 51-3126
Fax: +49 7836 51-1878
E-mail: gpservices@hansgrohe.com

iSpecify

The hansgrohe online planning platform, iSpecify, makes planning your bathroom simple. It helps with all the necessary product specifications and provides inspiration with examples. Simply start your planning process by viewing the reference projects or the specific product and see for youself. You can access all the key data at all times and save your progress in project lists.
ispecify.hansgrohe.com

First-hand testing

Service – put it to the test

You can experience the whole world of hansgrohe products up close and with all your senses at our exhibition grounds in Schiltach, Germany. Go on a tour of our exclusive bathroom exhibition, visit the Water-Bath-Design Museum or test the showers in the hansgrohe Aquademie.

Aquademie

Bathroom exhibition, Water-Bath-Design Museum, bathroom and design, tours and consultations.
pro.hansgrohe-int.com/aquademie

Opening hours
Monday – Friday: 7.30 am – 7.00 pm
Saturdays, Sundays & public holidays:
10.00 am – 4.00 pm

Booking advice:
Tel.: +49 7836 513272
Tuesday, Wednesday, Friday:
1.00 pm – 6.00 pm



Showerworld

Test showers in the Showerworld. Anything is possible at the hansgrohe Aquademie.
pro.hansgrohe-int.com/aquademie

Opening hours
Monday – Friday:
7.30 am – 7.00 pm
Saturday, Sunday:
10.30 am, 12.30 pm, 2.30 pm

Register for the Showerworld:
Telephone: +49 7836 51 3272
Fax: +49 7836 51-1505
1 hour, maximum 20 people




BORA
hansgrohe
BORA
hansgrohe
BORA
hansgrohe
BORA
hansgrohe
BORA
hansgrohe
BORA
hansgrohe
BORA
hansgrohe
BORA
hansgrohe
© Bettiniphoto

hansgrohe sponsoring

From high-performance to ultimate relaxation

Our products can help you to focus on the challenges that come with a top performance by offering you a way to rest and recuperate after a strenuous day. We understand that athletes appreciate the incentive and indulgence of a hard-earned shower showering after a hard workout. Since 2017, hansgrohe has been the official title sponsor of the world-class BORA-hansgrohe cycling team who wow crowds all over the world, just like our products. Our team have been involved in testing and developing products to offer our athletes a showering indulgence that matches their peak performance. Find out where and when our riders will be racing at **BORA-hansgrohe.com** or on the hansgrohe and BORA-hansgrohe team social media pages.

borahansgroheofficial
hansgrohe
PeterSagan

borahansgrohe
hansgrohe

BORA-hansgrohe.com
hansgrohe.com



Left-hand page: Peter Sagan, three-time UCI cycling world champion - picture from the BORA-HANSGROHE team training camp in Mallorca.
Right page: Peter Sagan, World Cycling Champion 2015, 2016 & 2017.

SHOWERS AND SHOWER CONTROLS

The wide range of products that fulfils all requirements

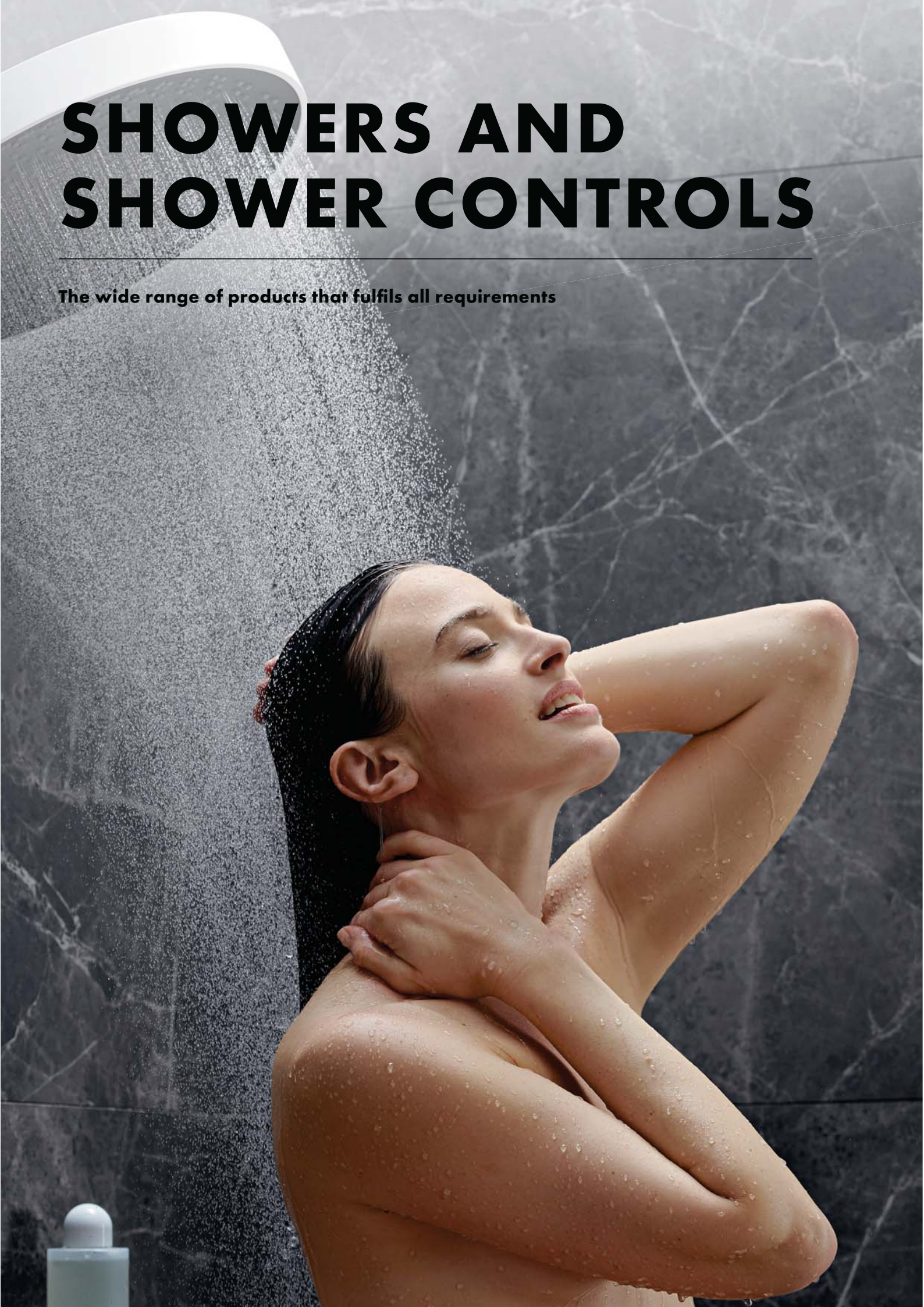

Shower installations

As individual as your customers

When it comes to showering, everyone is unqiue. So, we offer a variety of shower combinations to make any wish a reality: from a simple overheard shower right through to a full set that includes a thermostatic mixer, hand shower and overhead shower. Our installation options are also flexible. Whether you prefer concealed or exposed installation, we have the perfect solution. We are also able to provide all-in-one showerpipe and shower panel systems to get more out of your shower, even in renovation projects.

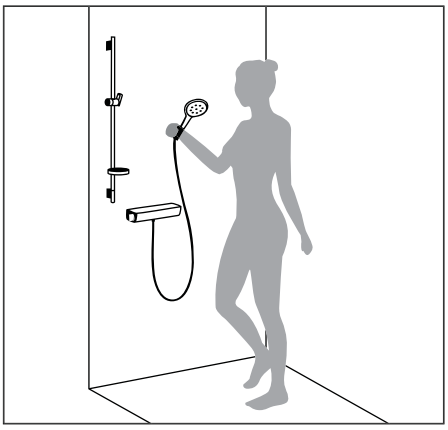

Hand shower or shower set
The basic solution is easy to install and gives you an indulgent shower experience.

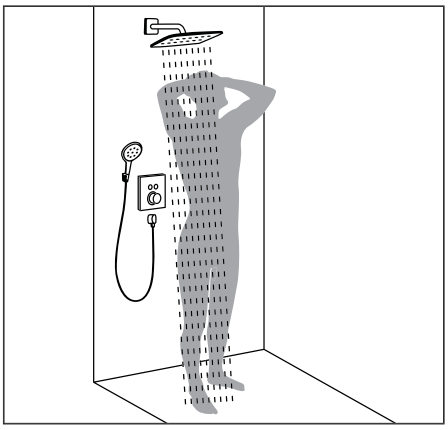

Overhead shower
For shower rain with the ability to move freely. The variants with extra large spray discs deliver extra comfort.

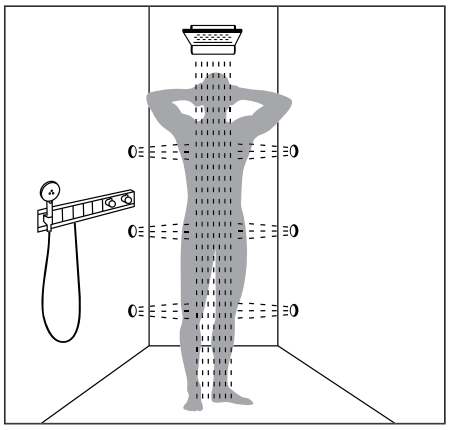

Shower family
The concealed solution for customised shower design. From the waterfall to the all-round indulgence of side showers.

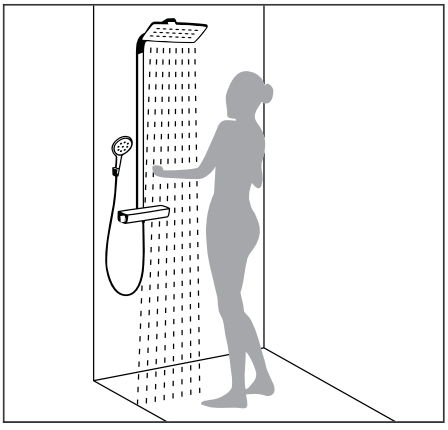

Showerpipe
The all-in-one system with overhead shower, hand shower and thermostatic mixer. The perfect solution for simple bathroom renovation.

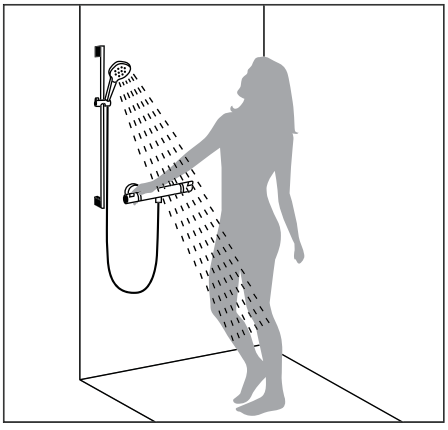

Exposed thermostatic mixers
Exposed solutions by hansgrohe can be installed with little effort to add a technical and visual enhancement to bathrooms.

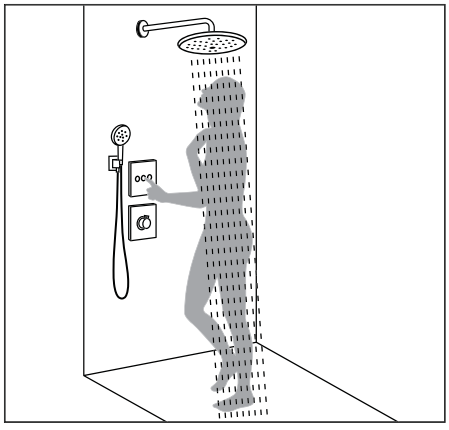

Concealed pre-fab sets
The minimalist shower control nestles up flat against the wall. This creates an ultra-modern, uncluttered look.

New: shower innovations for the whole family

Feel-good design for all ages

Our new showers and shower controls will give your entire family everything they need. Our innovative Rainfinity range can be fully adapted to you and your needs so that everybody can relax in their own unique way. And with Croma E, we offer affordable products with increased safety options for an all-round modern family bathroom.



Rainfinity: Reach peak relaxation with Rainfinity: a range of showers that drowns out the competition.



Rainfinity: Thanks to the innovative design, the spray softly envelops your body like a coat made of a thousand tiny drops.



Rainfinity: Simply choose between PowderRain, Intense PowderRain and MonoRain at the touch of a button.



Rainfinity: Treat yourself to the ultimate showering indulgence with the innovative and intuitive concealed control options such as ShowerSelect and RainSelect.



Croma E: The large overhead shower with the luxuriously soft RainAir spray transforms showering into an adventure for the little ones.



Croma E: It's child's play to use and child safe to operate with the CoolContact and SafetyStop functions.



Ecostat E: The CoolContact cooling technology stops the thermostatic mixer's housing on the Ecostat E getting too hot.



PowderRain: Pamper your skin with thousands of fine and silky micro-droplets. The fine spray will transform your bathroom into an oaisis of relaxation.

Shower design with hansgrohe

The modern way of showering

The bathroom reflects the individual personality of the user. That is why hansgrohe offers a wide selection of different ranges, designs, shapes and colours for just the right combination in the shower. From large bathrooms to small ones, modern to classic and from new-builds to refurbishments: there is the right offer for discerning users of any private or project bathroom. Whether exposed or concealed installation or an innovative exposed or concealed solution, if it's hansgrohe then impressive quality is always guaranteed. Modern technology also provides efficiency, saves water and ensures the right showering experience in any format.

Concealed installation







Space saver: here, the shower and room merge together. Thanks to the seamless integration of the shower fitting, this concealed solution provides more space and greater freedom of movement. Elegantly understated and exclusive at the same time, it can be integrated in any bathroom.

Exposed installation





Elegant: the exposed solution with thermostat and hand shower is the classic shower installation. However, it can also be reinterpreted, for instance with a Showerpipe, the complete system with thermostat, overhead and hand shower. Particularly attractive for modernisations because the Showerpipe can be fitted to existing connections.

Exposed/concealed installation



Practical: With the unique combination of exposed and concealed installation, the thermostat can be fitted directly to the water connections. The connection to the overhead shower is hidden away behind the wall. Innovative and functional design in one with no irritating elements.

More indulgence with a range spray types by hansgrohe

Spray types – something for every shower

Everyone showers differently, and everyone has different expectations of the perfect shower. Some think it not only as a necessity but also a way to relax. Others value an energising, invigorating shower experience. No matter what your customers' wishes, every one of them will find the right hand or overhead shower and the right spray type in the hansgrohe range. The Select products promise your customers particular convenience. They can then select each spray type easily at the push of a button.



PowderRain
Revolutionise your daily shower experience with PowderRain and transform your bathroom into an oasis of relaxation. Instead of only one spray outlet per nozzle, PowderRain has six fine openings that create thousands of fine and silky micro-droplets.



Intense PowderRain
An intense series of fine micro-droplets for sensational showering. Intense PowderRain is extraordinarily effective thanks to the increased number of droplets for a firm, yet velvety soft, spray. As the micro-droplets weigh less, the splash effect is also reduced.

Simply scan the code and experience the spray patterns in the video.



Rain and Rain XL
The openings on the hand or overhead shower may be small, but their effect is all the greater: The rain spray revitalises and refreshes with its pleasant power enveloping the body. It is therefore ideal, for example, for rinsing out shampoo quickly and thoroughly.



RainAir and RainAir XL
If you are looking for relaxation and you want your soul to be pampered by the water. Just the right thing for this is a hand or overhead shower with the soft, luxurious RainAir spray that provides air-enriched drops from a large, wide jet, to wash your cares away.



IntenseRain
Rinsing out shampoo is easy with the strong IntenseRain water spray. Perfect for setting yourself up for the day. The IntenseRain spray not only rinses out shampoo, but it also washes morning tiredness down the drain – for a refreshing start to the day.



TurboRain
The all-purpose tool for quick results: The revitalising TurboRain spray lives up to its name. The pure power of the most powerful of all Rain sprays provides a refreshing shower experience. For those who like things to be quick and straightforward.



SoftRain
The gentle SoftRain water spray gently wraps itself around the body. A treat for the skin – and for the soul, of course. Whether a daily shower or for relaxation, the SoftRain spray is always the right choice. Its strengths come into their own in a quick shower in the morning and in a long soak in the bath after a hard day.



Mix
Gentle and dynamic at the same time. The mix spray combines the rich, soft RainAir spray with the strong, revitalising CaresseAir spray. Soft drops wrap themselves around the body, while a warm targeted water flow in the middle massages the skin. The perfect combination for daily showering pleasure.



Whirl
The concentrated Whirl spray simply washes away the exertions of the day. Whether hand or overhead shower: Three single sprays revolve around each other for an intense massage effect that dissolves tension.



CaresseAir
Five strong single sprays combine in a revitalising, strong massage spray for pleasant relaxation. Just the thing after exercise or a hard day at work – good as new in minutes.

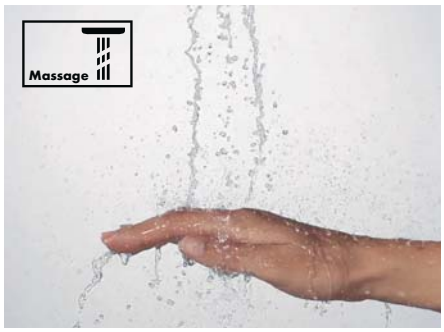

Massage
A concentrated spray that simply washes the day's stress away. The targeted spray easily relaxes tense areas. The innovative circular arrangement of the sprays turns the shower into a mobile wellness treatment for the home bathroom.

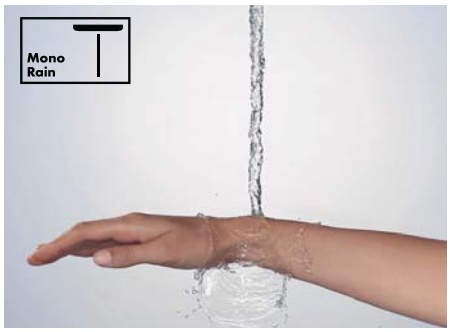

MonoRain
A targeted, soothing relaxation spray from the centre of the shower. The lightness of the Mono spray helps you to unwind, making it the perfect spray for relaxing.



RainFlow
An overhead shower with the clear, beautifully shaped RainFlow cascading spray brings the waterfall experience to the bathroom. This lets you enjoy water in its natural form, as a cascade from above on the neck and shoulders. This can be directed specifically to these parts of the body and tension quickly disappears. This is a trend especially in the wellness bathroom.



RainStream
The new RainStream of single sparkling jets is a crowning achievement of the hansgrohe spray developers. These special overhead shower sprays do not constrict, but remain unvaryingly revitalising and intense right down to the floor. The result: a new, revitalising shower experience, irrespective of the users height.

You'll find videos on all the spray types at **youtube.com/hansgrohe**
The spray types of the showers are identified by the icons.

Simple and intelligent

Technologies – intuitive, fast and economical

Select: showering pleasure at the touch of a button.

Because sometimes pressing is easier than turning. With our innovative Select technology, a simple touch of a button on the shower or shower control is all it takes to change the spray mode or turn the water on/off for even more comfort while showering, no matter your age.



Advantages and benefits

- Intuitive control at the touch of a button
- More comfort for every generation
- Mechanical construction for permanent functional safety

Select for hand and overhead showers



Hand showers: Thanks to the revolutionary mechanical construction, the spray can be changed, simply by touching a button. The Select button confirmed its durability in a long-term test that operated it 90,000 times.



Overhead showers: The innovative changeover unit in the overhead shower makes it easy to change the spray following the Select principle. Purely mechanically, at the touch of a button.

Select for exposed and concealed controls



RainSelect: Fully integrated system consisting of one basic and one finish set. Up to five users can be conveniently selected at the touch of a button.



ShowerTablet/Showerpipe: Depending on the design, you can switch between users at the touch of a button. Raised buttons indicate which user is currently active.



ShowerSelect pre-fab set: Easy control of up to 4 functions at the touch of a button – even at the same time. Thanks to the optional button extension, operation is just as easy for users with limited mobility since the buttons then protrude.

Find out more at **www.hansgrohe-int.com/technologies**

Scan the code and learn more about hansgrohe technologies.

QuickClean: fast anti-limescale function

QuickClean means flexible silicone inserts on the aerators. Dirt and limescale deposits can be simply rubbed off with your finger with no need to use cleaning products, helping to extend your shower's lifespan.

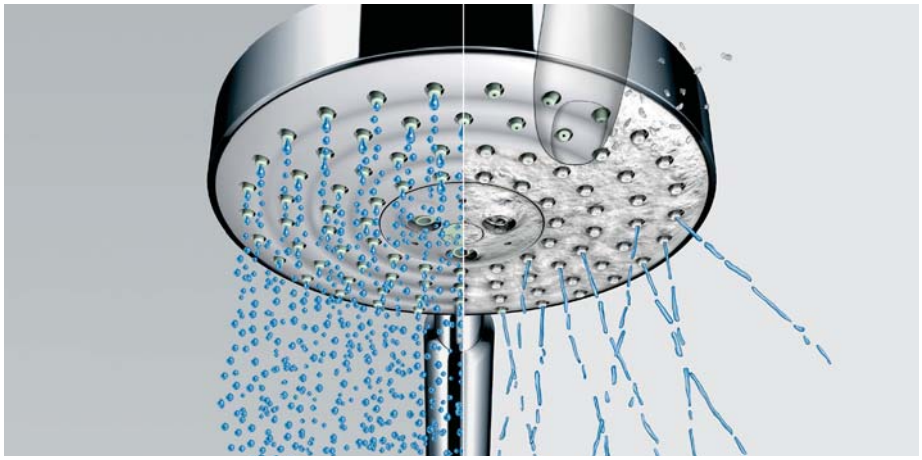

Advantages and benefits

- Fast and easy cleaning
- Ultra high quality and tear resistant silicone
- For a long lifetime and functionality

EcoSmart: water and energy savings

EcoSmart technology means that our showers use up to 60 % less water than conventional products through aeration, saving not just water, but energy too.

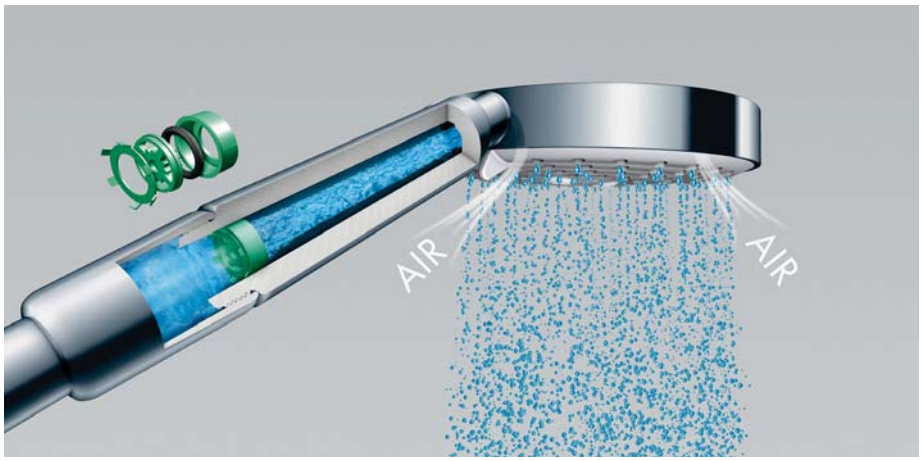

Advantages and benefits

- Up to 60 % less water consumption
- Hot water savings for less energy consumption – so less CO_2 emissions and lower costs

How much water and energy can be saved is calculated by the savings calculator at:
pro.hansgrohe-int.com/savings-calculator

Added indulgence in the shower

Technologies – bigger, safer and more efficient

AirPower: more volume, more pleasure

Comfort and efficiency don't have to be mutually exclusive and our AirPower showers prove it. An ample supply of air is sucked in via the spray disc of your shower, making the droplets fuller, lighter and softer, increasing water efficiency at the same time.

Air Power



Advantages and benefits

- Fuller, lighter and softer drops – pure shower pleasure
- Fewer splashes, so less cleaning
- Larger water volume for greater water efficiency

XXLPerformance: great shower pleasure

Enjoy even greater showering indulgences with the XXLPerformance. With air-enriched, plump droplets, the water feels like warm summer rain, offering glorious relaxation with astoundingly low water consumption.

XXL Performance



Advantages and benefits

- XXL showering
- High water efficiency – a uniformly distributed spray for an incomparable showering experience

Scan the code and learn more about hansgrohe technologies.

CoolContact: safe and indulgent showering

The CoolContact cooling technology stops the thermostatic mixer's housing getting too hot. So there is no more need to keep a safe distance from the taps, making showering even more care- free. It also means there is no more risk of children burning their delicate hands.

Cool Contact



Advantages and benefits

- Innovative cooling technology
- More safety in the bathroom, for children too
- Care-free showering

Find out more at **www.hansgrohe-int.com/technologies**

Phase out products	Code no.	available up to
Hand showers		
Crometta 100		
Hand shower Multi EcoSmart 9 l/min	26826400	12/31/2021
Hand shower 1jet EcoSmart 7 l/min	26829400	12/31/2021
Shower sets / Shower bars / Shower holder		
Raindance Classic shower sets		
Shower set 100 3jet with shower bar 90 cm	27841000	12/31/2021
	27841090	12/31/2021
Shower set 100 3jet with shower bar 65 cm	27843000	12/31/2021
	27843090	12/31/2021
Croma 100 shower sets		
Shower set Multi EcoSmart 9 l/min with shower bar 90 cm and soap dish	27655000	12/31/2021
Shower set Mono EcoSmart 9 l/min with shower bar 65 cm and soap dish	27742000	12/31/2021
Crometta 85 shower sets		
Shower set Mono Green 6 l/min with shower bar 90 cm	27651000	12/31/2021
Crometta 100 shower holder sets		
Shower holder set Vario with shower hose 160 cm	26667400	12/31/2021
Crometta 85 shower holder sets		
Shower holder set Multi with shower hose 125 cm	27568000	12/31/2021
Overhead showers		
Raindance S		
Overhead shower 180 1jet EcoSmart 9 l/min with shower arm	27462000	12/31/2021
Overhead shower 180 1jet with shower arm 39 cm	27468000	12/31/2021
Overhead shower 180 1jet with shower arm 24 cm	27476000	12/31/2021
Thermostatic mixers / valves		
Thermostatic mixers for exposed installation		
Shower thermostat for exposed installation	13356000	12/31/2021
Logis		
Pillar tap 70 for hot water without waste set	71121000	12/31/2021
3-hole rim mounted bath mixer	71300000	12/31/2021
Accessories		
Logis Universal Accessories		
Shaving mirror with LED light	73560000	06/30/2020

Phase out products	Code no.	available up to
Kitchen mixers and sinks		
Stainless steel sink combis		
C71-F450-01 Sink combi 450 Select	43207000	12/31/2021
	43207800	12/31/2021
C71-F450-02 Sink combi 450 Select with drainboard left	43208000	12/31/2021
	43208800	12/31/2021
C71-F660-03 Sink combi 660 Select	43209000	12/31/2021
	43209800	12/31/2021
C71-F655-04 Sink combi 180/450 Select	43210000	12/31/2021
	43210800	12/31/2021
C71-F765-05 Sink combi 370/370 Select	43211000	12/31/2021
	43211800	12/31/2021
C71-F450-11 Sink combi 450 Select with drainboard right	43229000	12/31/2021
	43229800	12/31/2021
SilicaTec sink combis		
C51-F450-01 Sink combi 450 Select	43212000	12/31/2021
C51-F660-02 Sink combi 660 Select	43213000	12/31/2021
C51-F450-03 Sink combi 450 Select with drainboard left	43214000	12/31/2021
C51-F635-04 Sink combi 180/450 Select	43215000	12/31/2021
C51-F770-05 Sink combi 370/370 Select	43216000	12/31/2021
C51-F450-11 Sink combi 450 Select with drainboard right	43227000	12/31/2021

New product	Code no.
Shower sets / Shower bars / Shower holder	
Modern style Fixfit wall outlets	
Wall outlet S with non-return valve and synthetic connection angle	26453140 26453340 26453670 26453700 26453990
Wall outlet with non-return valve	26457140 26457340 26457670 26457700 26457990
Shower hoses and accessories	
Isiflex shower hoses	
Shower hose 125 cm	28272140 28272340 28272670 28272700 28272990
Overhead showers	
Raindance E	
Shower system for concealed installation with ShowerSelect thermostat	27939670
PuraVida	
Showers and shower holder	
Wall outlet with non-return valve	26457140 26457340 26457670 26457700 26457990
Accessories	
Logis Universal Accessories	
Shaving mirror with LED light	73570000
Wastes and overflow	
Accessories	
Straight pipe 50 cm	53493670 53493700
Kitchen mixers and sinks	
Aquno Select M81	
Single lever kitchen mixer 250, pull-out spout, 2jet, sBox	73830670
Single lever kitchen mixer 170, pull-out spray, 3jet, sBox	73831670
Single lever kitchen mixer 250, pull-out spout, 2jet	73836670
Single lever kitchen mixer 170, pull-out spray, 3jet	73837670

New product	Code no.
Kitchen mixers and sinks	
Talis M54	
Single lever kitchen mixer 220, device shut-off valve, 1jet	72805000 72805670 72805800
Single lever kitchen mixer U 220, device shut-off valve, 1jet	72807000 72807670 72807800
Single lever kitchen mixer 270, device shut-off valve, 1jet	72827000 72827670 72827800
Kitchen accessories	
A41 Soap-/ lotion dispenser	40438340 40438670
A51 Soap-/ lotion dispenser	40448670
A71 Soap-/ lotion dispenser	40468670
F21- Shut-off valve for concealed installation	72841000 72841670 72841800

Index Price brackets for Spare Parts

effective from 01.10.2020

Price bracket	finish (Euro*)	Price bracket	finish (Euro*)
1	2.30	51	3.50
2	3.80	52	5.70
3	6.20	53	9.30
4	8.30	54	12.50
5	10.20	55	15.30
6	13.40	56	20.10
7	16.50	57	24.80
8	20.70	58	31.10
9	26.40	59	39.60
10	32.70	60	49.10
11	42.00	61	63.00
12	51.80	62	77.70
13	63.20	63	94.80
14	73.70	64	110.60
15	91.70	65	137.60
16	118.90	66	178.40
17	149.70	67	224.60
18	183.40	68	275.10
19	242.20	69	363.30
20	294.50	70	441.80
21	396.00	71	594.00
22	559.70	72	839.60
23	801.50	73	1,202.30
24	1,584.90	74	2,377.40
98	Price find at this price book		
99	Price on request		

* Gross prices per piece, VAT not included.
Recommended retail prices.

Packaging unit

Please consider the packaging units when placing your order.

code no.	Number Of Items Per PackingUnit
01	
01800180	10
01850180	10
06	
06010000	2500
10	
10452180	6
10823000	30
10823800	30
13	
13111000	4
13114000	7
13114140	7
13114340	7
13114670	7
13114700	7
13114990	7
13115000	7
13116000	10
13116140	8
13116340	8
13116670	8
13116700	8
13116990	8
13117000	7
13122000	10
13123000	7
13132000	20
13141000	5
13141400	5
13151000	4
13151400	4
13159180	10
13161000	4
13161400	4
13171000	4
13171400	4
13182000	100
13201000	7
13211000	10
13233180	5
13244180	10
13414000	35
13423000	20
13424000	15
13425000	20
13425090	20
13437180	2
13439180	8
13444180	2
13595000	50
13596000	40
13604000	20
13620180	24
13622180	25
13901000	100
13902000	100
13903000	100
13912000	750
13913000	750
13950000	40
13952000	50
13954000	50
13954820	36
13961000	200
13964000	100
14	
14095000	56
14096000	56
14420000	28
14495000	28
14806000	3
14820000	4
14820800	4
14821000	4
14821800	4
14822000	4
14822800	4
14823000	4
14834000	4
14834800	4
14847000	4
14847800	4
14857000	4
14857800	4
14870000	10
14872000	4
14875000	4
14877000	4
14883000	4
14883800	4
14884000	4
14884800	4
14888000	4
14893000	36
14920000	20
15	
15070000	7
15070400	7
15072000	4
15072400	4
15074000	6
15074400	7
15075000	10
15075400	10
15081000	5
15081400	5
15084000	4
15084400	4
15085000	4
15085400	4
15170000	4
15170400	4
15172000	6
15270000	10
15270400	10
15275400	6
15310180	3
15311180	3
15355000	2
15355400	2
15356000	2
15356400	2
15357000	2
15357400	2
15358000	2
15358400	2
15380000	4
15380700	4
15381000	2
15381700	2
15382000	2
15382700	2
15384000	2
15384700	2
15412000	15
15412400	15
15432000	6
15432400	3
15445000	10
15445400	10
15447000	10
15472000	5
15472400	5
15597000	17
15665000	10
15665400	10
15672000	5
15672400	5
15705000	12
15706000	9
15707000	9
15708000	10
15712000	10
15714000	10
15714140	10
15714340	10
15714670	10
15714700	10
15714990	10
15734400	12
15734600	12
15735400	6
15735600	12
15736400	12
15736600	6
15737400	12
15737600	12
15738400	10
15738600	9
15741000	10
15742000	10
15743000	10
15744000	10
15745000	10
15747000	10
15748000	10
15755000	6
15756000	9
15757000	10
15758000	10
15760000	10
15761000	10
15762000	10
15763000	10
15763140	6
15763670	6
15763700	6
15764000	10
15765000	6
15767000	10
15768000	10
15771000	10
15771400	10
15773000	8
15774000	7
15777000	10
15930180	25
15932000	25
15970180	25
15972000	40
15973180	50
15974180	50
15978000	38
15978400	38
15981180	20
16	
16884000	100
16884820	80
19	
19418000	2
21	
21141000	64
21142000	64
21143000	64
21144000	64
21145000	64
21146000	64
24	
24010180	6
26	
26014000	22
26220000	6
26221000	6
26228000	6
26228700	6
26229000	6
26229700	6
26231000	2
26231700	2
26238000	3
26238140	3
26238340	3
26238670	3
26238700	3

Packaging unit

Please consider the packaging units when placing your order.

code no.	Number Of Items Per PackingUnit
26238990	3
26239000	3
26243000	8
26243700	8
26250000	3
26250140	3
26250340	3
26250670	3
26250700	3
26250990	3
26251000	3
26252000	3
26253000	3
26254180	6
26257000	4
26258000	4
26320000	10
26320400	10
26321000	10
26321400	10
26322000	3
26322400	3
26323000	5
26323400	3
26325000	2
26325400	2
26326000	2
26326400	2
26327000	2
26327400	2
26328400	9
26329000	15
26330400	24
26331400	24
26332400	24
26333400	24
26334400	24
26336400	24
26401000	10
26402000	5
26403400	2
26404400	2
26410400	20
26411400	20
26412400	20
26413400	20
26420400	20

code no.	Number Of Items Per PackingUnit
26421400	20
26424400	20
26425400	20
26442000	10
26443000	10
26453000	110
26455000	110
26455140	110
26455340	110
26455670	110
26455700	110
26455990	110
26456000	10
26456400	10
26457000	168
26457140	168
26464000	10
26465000	7
26466000	6
26466400	6
26467000	6
26467400	6
26468000	6
26468400	6
26469000	6
26470000	6
26470400	6
26471180	10
26472000	6
26481000	6
26485000	40
26486000	25
26487000	25
26503000	16
26504000	8
26505000	12
26506000	6
26511000	24
26511400	24
26511600	24
26519000	38
26520000	25
26520140	20
26520340	20
26520400	25
26520670	20
26520700	20

code no.	Number Of Items Per PackingUnit
26520990	20
26521000	25
26521400	24
26522000	10
26522400	7
26523000	7
26523400	10
26524000	10
26524400	10
26528000	10
26528400	10
26530000	20
26530140	20
26530400	20
26530670	20
26530700	20
26531000	25
26531400	25
26532400	12
26533400	12
26534400	12
26535400	12
26536400	7
26537400	4
26538400	4
26550000	28
26550400	28
26551000	30
26551400	28
26553400	12
26554400	12
26555400	12
26560400	12
26561400	12
26562400	12
26563400	12
26564400	12
26565400	12
26566400	12
26567400	20
26568400	20
26569400	20
26570400	7
26571400	7
26572400	7
26573400	7
26574400	7

code no.	Number Of Items Per PackingUnit
26575400	4
26577000	8
26577400	8
26578000	10
26578400	10
26580400	12
26581400	12
26582400	12
26583400	10
26584400	12
26585400	12
26586400	12
26590400	7
26591400	7
26592400	6
26593400	7
26594400	7
26595400	7
26600000	3
26601000	6
26604000	4
26605000	4
26606000	12
26608000	4
26608400	4
26609000	4
26609400	4
26620000	16
26620400	12
26621000	7
26621400	7
26622000	12
26622400	12
26623000	6
26623400	6
26626000	6
26626400	6
26630000	12
26630400	16
26631000	7
26631400	5
26632000	12
26632400	12
26633000	6
26633400	5
26650400	12
26651400	12

code no.	Number Of Items Per PackingUnit
26652400	16
26654400	12
26655400	12
26656400	7
26657400	7
26658400	7
26664400	20
26665400	20
26666400	20
26690400	20
26691400	20
26692400	20
26693400	15
26694400	14
26700000	20
26700400	20
26701000	20
26701400	20
26720000	20
26720400	20
26721000	20
26722000	10
26723000	10
26724000	10
26725000	10
26726000	10
26727000	10
26790000	2
26791000	2
26793000	2
26794000	2
26800400	24
26801400	24
26802400	24
26803400	24
26804400	24
26805400	34
26806400	34
26810400	32
26811400	34
26812400	32
26813400	32
26814400	32
26815400	34
26816400	34
26823400	24
26824400	24

code no.	Number Of Items Per PackingUnit
26825400	24
26827400	34
26828400	34
26840180	8
26843000	8
26843700	8
26844000	8
26844700	8
26852000	12
26852700	12
26857000	12
26857700	12
26858000	8
26858700	8
26864000	26
26864700	26
26865000	23
26865700	23
26866000	30
26866700	30
26867000	30
26867700	30
27	
27013400	7
27014400	5
27030400	8
27031400	5
27032000	6
27033000	3
27034000	7
27035000	3
27038000	2
27081400	7
27082400	5
27085000	4
27086000	8
27114000	2
27115000	2
27116000	2
27129000	2
27129400	2
27133000	2
27133400	2
27135000	2
27154000	2
27185000	2
27188000	2

code no.	Number Of Items Per PackingUnit
27222000	2
27224000	2
27256400	2
27258400	2
27264400	2
27267000	2
27268000	2
27269000	2
27270000	2
27271000	2
27281000	2
27284000	2
27289000	2
27296000	2
27337000	6
27337400	6
27355000	10
27356000	10
27370000	4
27371000	4
27375000	4
27376000	4
27378000	6
27378400	6
27380000	4
27381000	4
27383000	4
27384000	4
27384400	4
27385000	4
27385400	4
27388000	7
27389000	7
27389700	7
27390000	2
27390400	2
27393000	24
27393140	24
27393670	24
27393700	24
27405000	7
27405090	7
27409000	20
27411000	48
27412000	15
27413000	20
27414000	150

code no.	Number Of Items Per PackingUnit
27424000	5
27424090	7
27437000	2
27437400	2
27438000	36
27441000	26
27443000	26
27446000	20
27450000	20
27452000	20
27453000	100
27454000	100
27458000	100
27461000	6
27463000	7
27464000	7
27467000	24
27474000	6
27477000	7
27478000	7
27479000	36
27492000	2
27493000	6
27494000	6
27505000	150
27506000	100
27521000	100
27558000	20
27559000	20
27574000	20
27575000	20
27576000	20
27577000	20
27592000	20
27593000	20
27594000	20
27595000	20
27607000	6
27609000	10
27610000	10
27611000	20
27614000	10
27615000	20
27617000	12
27617820	12
27620000	7
27623000	7

code no.	Number Of Items Per PackingUnit
27636000	5
27640000	3
27640400	3
27640600	3
27645000	2
27645400	2
27645600	2
27646000	2
27646400	2
27647000	2
27647400	2
27648000	3
27648400	3
27649000	3
27649400	3
27652000	12
27653000	7
27654000	12
27660000	2
27667000	7
27668000	10
27671000	4
27672000	2
27673000	2
27674000	2
27704000	10
27717000	10
27724000	7
27728000	10
27729000	7
27762000	7
27763000	10
27764000	12
27766000	7
27767000	10
27771000	7
27772000	10
27774000	7
27776000	12
27791000	7
27802000	10
27802400	10
27803000	5
27803400	5
27812400	7
27813400	3
27833400	3

code no.	Number Of Items Per PackingUnit
27844000	6
27853000	5
27853400	5
27856000	10
27856400	10
27857000	5
27857400	5
28	
28010000	5
28072000	400
28132000	25
28134000	25
28136000	25
28167000	25
28168000	25
28169000	25
28248000	25
28249000	25
28262000	50
28264000	50
28266000	50
28272000	25
28272450	25
28274000	25
28276000	25
28276140	25
28276340	25
28276450	25
28276670	25
28276700	25
28276800	25
28276990	25
28307000	20
28321000	200
28324000	100
28328000	72
28331000	100
28331800	105
28335000	54
28346000	180
28387140	105
28387340	105
28387670	105
28387700	105
28387990	105
28389000	2
28423000	50

Packaging unit

Please consider the packaging units when placing your order.

code no.	Number Of Items Per PackingUnit
28424000	32
28425000	25
28430000	40
28430400	40
28462000	26
28466000	48
28467000	80
28496000	18
28535000	20
28536000	20
28537000	24
28538000	24
28539000	25
28548000	12
28548090	15
28557000	35
28557400	20
28558000	40
28558400	40
28561000	30
28562000	30
28563000	30
28567000	15
28567400	20
28568000	30
28568400	35
28580000	24
28583000	24
28585000	35
28587000	20
28587400	20
28588000	20
28588400	20
28631000	10
28631670	10
28632000	20
28632140	20
28632340	20
28632670	20
28632700	20
28632990	20
28650000	170
28662000	10
28663000	12
28672000	20
28675000	60
28678000	40
28679000	60
28684000	50
28694000	100
28698000	6
31	
31016000	10
31022000	4
31023000	4
31060000	10
31068000	10
31080000	10
31081000	6
31082000	4
31084000	10
31085000	6
31086000	6
31087000	5
31088000	10
31100000	4
31101000	4
31102000	4
31103000	4
31121000	10
31130000	10
31159000	6
31160000	10
31161000	5
31162000	6
31163000	6
31171000	4
31172000	4
31173000	4
31174000	8
31183000	5
31184000	4
31185000	5
31186000	10
31187000	6
31190000	6
31261000	10
31280000	10
31285000	6
31300000	10
31300090	10
31301000	10
31301090	10
31302000	8
31302090	8
31303000	8
31307000	4
31320000	10
31320090	10
31330000	4
31331000	4
31340000	8
31340090	8
31345000	8
31345090	8
31360000	8
31360090	8
31365000	8
31365090	8
31422000	4
31423000	4
31442000	6
31443000	9
31451000	12
31454000	12
31456000	12
31460000	8
31465000	10
31466000	10
31480000	8
31493000	10
31494000	20
31509000	10
31513000	10
31517000	10
31518000	5
31519000	6
31521000	4
31523000	4
31531000	5
31532000	5
31539000	10
31603000	10
31604000	10
31607000	10
31608000	5
31609000	6
31621000	10
31629000	6
31657000	10
31658000	4
31660000	8
31665000	10
31677000	40
31680000	8
31685000	9
31686000	15
31730000	10
31732000	10
31733000	10
31738000	10
31741180	20
31780000	10
31784000	10
31803000	6
31804000	10
31806000	10
31806800	10
31815000	4
31815670	4
31815800	4
31816000	10
31817000	10
31817670	4
31817800	10
31820000	10
31820670	10
31820800	10
31822000	10
31823000	4
31825000	8
31910000	8
31911000	5
31913000	6
31914000	5
31915000	5
31916000	2
31920000	10
31922000	10
31926000	10
31927000	8
31928000	10
31930000	10
31931000	10
31936000	4
31937000	4
31938000	8
31940000	8
31945000	10
31946000	10
31947000	25
31948000	8
31951000	10
31952000	7
31960000	8
31961000	20
31965000	10
31967000	25
31968000	8
31971000	50
32	
32020000	10
32031000	10
32032000	10
32070000	6
32122000	15
32127000	20
32128000	20
32129000	20
32420000	8
32475000	10
32477000	10
32500000	5
32501000	5
32502000	5
32503000	5
32506000	5
32507000	5
32507140	5
32507340	5
32507670	5
32507700	5
32507990	5
32508000	5
32511000	6
32512000	7
32512670	4
32512700	4
32512990	4
32514000	4
32520000	5
32520140	7
32520990	7
32522000	4
32525000	6

Packaging unit

Please consider the packaging units when placing your order.

code no.	Number Of Items Per PackingUnit
32526000	9
32526700	7
32540000	6
32540670	10
32540990	10
32542000	20
32543000	5
32545000	6
32545140	10
32545670	10
32545700	10
32545990	10
32546000	6
32560000	6
32560670	10
32560700	10
32565000	6
32565140	10
32565670	10
32565700	10
32565990	10
32570000	5
32571000	5
32572000	4
32620000	8
32675000	10
32841000	10
32851000	10
40	
40068000	48
40088000	48
40418000	15
40418800	15
40438000	15
40438800	15
40448000	15
40448800	15
40468000	15
40468800	15
40511000	125
40511820	80
40512000	15
40512820	6
40513000	20
40513820	6
40514000	12
40514820	12

code no.	Number Of Items Per PackingUnit
40515000	18
40515820	6
40516000	18
40516820	20
40517000	30
40517820	36
40518000	18
40518820	6
40522000	10
40522820	10
40523000	32
40523820	10
40526000	30
40526820	10
40952800	90
41	
41501000	125
41502000	6
41503000	6
41504000	10
41505000	12
41506000	15
41508000	15
41512000	10
41513000	15
41518000	25
41710000	30
41711000	200
41712000	18
41713000	30
41714000	30
41715000	30
41716000	25
41717000	24
41718000	40
41720000	4
41722000	6
41723000	30
41724000	9
41725000	75
41726000	75
41727000	3
41728000	2
43	
43921800	12
43927000	10
43928000	4

code no.	Number Of Items Per PackingUnit
43931800	12
43937000	10
43938000	6
43948000	3
50	
50001000	80
50100000	30
50100140	100
50100340	70
50100670	100
50100700	100
50100990	70
50105000	100
50107000	12
52	
52010000	30
52053000	30
52100000	18
52105000	30
52105140	24
52105340	24
52105670	24
52105700	24
52105990	24
52120000	20
53	
53002000	25
53010000	25
53428000	50
53646000	14
53990000	100
55	
55213000	30
55237000	25
56	
56373000	36
58	
58112000	12
58113000	13
58115180	13
58116180	10
58117000	50
58123000	13
58125180	13
58126180	10
58127000	50
58140180	13

code no.	Number Of Items Per PackingUnit
58141180	10
58142000	13
58143000	13
58150000	13
58185000	100
58185990	100
58186000	80
58186820	80
58192000	20
60	
60056000	20
60067000	14
71	
71020000	13
71021000	13
71022000	13
71024000	13
71030000	13
71031000	13
71032000	13
71034000	13
71040000	8
71041000	8
71042000	8
71045000	6
71050000	13
71060000	8
71061000	8
71062000	8
71063000	20
71065000	6
71067000	20
71068000	10
71070000	13
71071000	13
71072000	13
71073000	13
71074000	10
71075000	13
71076000	13
71077000	13
71078000	13
71090000	5
71091000	5
71095000	5
71100000	13
71101000	13

code no.	Number Of Items Per PackingUnit
71102000	13
71103000	13
71104000	13
71105000	13
71107000	13
71120000	13
71123000	5
71124000	5
71126000	6
71127000	6
71128000	6
71130000	6
71131000	6
71133000	4
71140000	4
71142000	13
71144000	7
71145000	9
71170000	13
71171000	13
71200000	13
71203000	13
71204000	13
71220000	6
71221000	4
71222000	4
71225000	8
71243000	6
71263000	9
71280000	5
71283000	5
71285000	5
71286000	6
71287000	6
71290000	10
71310000	5
71311000	12
71312000	12
71313000	5
71314000	9
71315000	12
71320000	20
71321000	12
71322000	12
71324000	12
71333000	9
71400000	8

Packaging unit

Please consider the packaging units when placing your order.

code no.	Number Of Items Per PackingUnit
71401000	8
71402000	5
71405000	10
71406000	15
71407000	10
71409000	12
71410000	20
71430000	8
71474140	10
71474670	10
71474700	10
71474990	10
71600000	8
71601000	8
71604000	15
71605000	10
71606000	20
71629000	5
71630000	8
71666000	9
71700000	10
71701000	10
71702000	10
71703000	10
71704000	10
71706000	10
71710000	10
71710140	10
71710340	10
71710670	10
71710700	10
71710990	10
71711000	10
71712000	10
71712140	10
71712340	12
71712670	10
71712700	10
71712990	12
71713000	10
71714000	10
71716000	4
71716140	5
71716340	5
71716670	5
71716700	5
71716990	5

code no.	Number Of Items Per PackingUnit
71717000	5
71720000	10
71721000	10
71729000	7
71731000	5
71732000	6
71733000	4
71733140	4
71733670	4
71734000	6
71734140	6
71734340	6
71734670	6
71734700	6
71734990	6
71740000	8
71740140	6
71740340	6
71740670	6
71740700	6
71740990	6
71745000	10
71745140	10
71745670	10
71745700	10
71745990	10
71748140	3
71748670	5
71750000	10
71751000	10
71752000	5
71753000	10
71754000	6
71755000	5
71760000	8
71760140	6
71760340	6
71760670	6
71760700	6
71760990	6
71761000	8
71764000	20
71765000	10
71765140	10
71765670	10
71765700	10
71765990	10

code no.	Number Of Items Per PackingUnit
71766000	20
71768000	10
71802000	4
71802800	4
71804000	10
71805000	10
71806000	10
71806800	10
71807000	10
71808000	6
71813000	3
71814000	10
71820000	6
71820800	6
71829000	3
71829800	3
71830000	10
71831000	10
71832000	10
71833000	4
71834000	3
71835000	10
71836000	10
71837000	10
71839000	10
71920000	8
71921000	8
71923000	8
71926000	8
71970000	50
72	
72010000	10
72011000	10
72012000	10
72013000	10
72014000	10
72017000	10
72020000	10
72021000	10
72022000	10
72023000	10
72031000	5
72032000	8
72040000	10
72041000	10
72042000	10
72043000	10

code no.	Number Of Items Per PackingUnit
72044000	7
72045000	5
72105000	6
72110000	8
72111000	9
72113000	5
72115000	6
72116000	6
72200000	10
72202000	10
72290000	6
72291000	8
72400000	8
72405000	9
72410000	20
72417000	5
72600000	8
72605000	12
72606000	20
72800000	4
72800670	4
72800800	9
72801000	3
72801670	3
72801800	3
72802000	4
72802670	9
72802800	9
72803000	3
72803670	3
72803800	3
72804000	4
72804670	9
72804800	9
72805000	4
72805670	9
72805800	9
72806000	4
72806670	9
72806800	9
72807000	4
72807670	9
72807800	9
72808000	4
72808670	9
72808800	9
72809000	3

code no.	Number Of Items Per PackingUnit
72809670	3
72809800	3
72810000	4
72810800	4
72811000	9
72813000	4
72813800	4
72814000	4
72814800	9
72815000	9
72815800	9
72820000	4
72820800	4
72821000	4
72821800	4
72822000	8
72822800	8
72827000	4
72827670	9
72827800	9
72840000	4
72840670	9
72840800	9
72842000	4
72842670	9
72843000	4
72843670	9
72844000	4
72844670	9
72845000	4
72845670	9
73	
73561000	6
73800000	6
73800800	6
73801000	6
73801800	6
73802000	6
73802800	4
73803000	6
73803800	6
73804000	6
73804800	6
73805000	6
73805800	6
73806000	4
73806800	6

code no.	Number Of Items Per PackingUnit
73812000	4
73812800	6
73850000	6
73850800	6
73851000	6
73851800	6
73852000	6
73852800	6
73853000	6
73853800	6
73860000	7
73860800	6
73863000	3
73880000	4
73880800	6
74	
74500000	5
74502000	5
74506000	5
74507000	5
74511000	5
74512000	4
74520000	5
74522000	9
74525000	6
74526000	6
74540000	8
74545000	10
74546000	10
74548000	30
74560000	8
74565000	10
92	
92019000	180
92601000	50
92631000	30
92730000	50
93	
93286000	20
93500000	32
94	
94004000	30
94005000	200
94008000	90
94009000	120
94051000	200
94055000	80
94139000	20
94148000	25
94149000	200
94246000	800
94282000	50
94850000	200
95	
95048000	25
95052000	30
95053000	100
96	
96016000	160
96026000	50
96083000	50
96100000	1000
96153000	50
96170000	50
96177880	80
96179000	200
96184000	200
96186000	400
96188000	160
96189000	160
96190000	50
96191000	100
96192000	160
96339000	56
96387000	18
96441000	6
96467000	80
96529000	200
96615000	27
96618000	160
96657000	31
96770000	5
97	
97116000	20
97231000	160
97450000	4000
97462000	140
98	
98066000	4500
98556000	80
98610000	160
98993000	100

Code Numbers and Trade Prices

brand	code no.	Euro	EAN	page
01				
HG	01800180	130.80	4011097347240	138
HG	01850180	169.90	4011097677545	266
02				
HG	02024000	4.40	4011097100005	129
HG	02026000	30.10	4011097729220	185
06				
HG	06010000	2.40	4011097100135	472
10				
AX	10452180	437.90	4011097254104	281
AX	10490000	73.70	4011097432601	573
AX	10823000	139.20	4011097693712	557
AX	10823800	208.80	4011097694566	557
AX	10890000	51.80	4011097460901	573
AX	10891000	51.80	4011097462110	573
11				
AX	11095000	73.70	4011097165110	568
AX	11098000	63.20	4011097257051	570
13				
HG	13085000	8.30	4011097102184	568
HG	13085810	10.20	4011097423449	568
HG	13097000	32.70	4011097102375	567
HG	13111000	351.70	4011097754161	230
HG	13111400	351.70	4011097753928	230
HG	13114000	299.00	4011097678832	232
HG	13114140	448.50	4059625229774	232
HG	13114340	448.50	4059625229781	232
HG	13114670	418.60	4059625229798	232
HG	13114700	418.60	4059625229804	232
HG	13114990	448.50	4059625229811	232
HG	13115000	322.60	4011097678849	233
HG	13116000	234.10	4011097678856	232
HG	13116140	351.20	4059625229828	232
HG	13116340	351.20	4059625229835	232
HG	13116670	327.70	4059625229842	232
HG	13116700	327.70	4059625229859	232
HG	13116990	351.20	4059625229866	232
HG	13117000	257.60	4011097678863	233
HG	13122000	210.20	4011097739205	237
HG	13123000	268.60	4011097739229	237
HG	13132000	138.70	4011097526058	376
HG	13141000	456.70	4011097661308	229
HG	13141400	456.70	4011097666402	229
HG	13151000	610.70	4011097717036	228
HG	13151400	610.70	4011097717029	228
HG	13159180	200.00	4011097835310	312
HG	13161000	351.70	4011097661315	229
HG	13161400	351.70	4011097665696	229
HG	13171000	456.70	4011097717012	227
HG	13171400	456.70	4011097717005	227
HG	13182000	11.70	4011097668482	569
HG	13183000	1,374.70	4011097771021	227
HG	13183400	1,374.70	4011097771014	227
HG	13184000	1,145.60	4011097771083	226
HG	13184400	1,145.60	4011097771076	226
HG	13201000	208.30	4011097799599	239
HG	13211000	164.20	4011097799582	238
HG	13233180	179.70	4011097629407	359
HG	13244180	275.20	4011097629414	316
AX	13290330	32.70	4011097189987	573
AX	13290430	32.70	4011097102979	573
AX	13290450	32.70	4011097102993	573
AX	13290480	32.70	4011097103013	573
AX	13290610	32.70	4011097183220	573

brand	code no.	Euro	EAN	page
HG	13414000	105.30	4011097532509	378
HG	13423000	107.70	4011097603766	378
HG	13424000	116.70	4011097594774	378
HG	13425000	181.70	4011097801896	322
HG	13425090	231.40	4011097801889	322
HG	13437180	653.90	4011097660837	282
HG	13439180	333.40	4011097734033	314
HG	13444180	798.10	4011097140841	315
HG	13473000	73.70	4011097178233	570
AX	13485000	13.40	4011097104416	568
HG	13560180	50.00	4059625202968	465
HG	13593000	43.70	4011097745015	267
HG	13595000	47.10	4011097333670	267
HG	13596000	44.70	4011097393803	322
HG	13597000	44.70	4011097564739	259
HG	13601000	106.20	4011097783727	249
HG	13604000	93.60	4011097825915	247
HG	13620180	105.30	4011097228747	337
HG	13622180	210.00	4011097625386	278
AX	13690330	32.70	4011097190587	573
AX	13690430	32.70	4011097104997	573
AX	13690450	32.70	4011097105017	573
AX	13690480	32.70	4011097105031	573
AX	13690610	32.70	4011097177304	573
HG	13893000	91.70	4011097105444	574
HG	13893450	91.70	4011097105475	574
HG	13901000	15.50	4011097537122	470
HG	13902000	13.30	4011097537139	470
HG	13903000	14.60	4011097646411	470
HG	13904000	28.10	4011097666778	470
HG	13912000	13.10	4011097413747	569
HG	13913000	10.20	4011097413754	569
HG	13914000	10.40	4011097413761	569
HG	13950000	31.10	4011097350721	469
HG	13950140	46.70	4011097957050	469
HG	13950670	43.50	4059625266137	469
HG	13950700	43.50	4059625266144	469
HG	13950990	46.70	4011097957128	469
HG	13952000	26.40	4011097105932	567
HG	13954000	50.40	4011097360393	469
HG	13954820	75.60	4011097525532	469
HG	13961000	16.50	4011097105949	577
HG	13964000	32.70	4011097105970	567
HG	13970000	51.80	4011097105994	570
HG	13971000	63.20	4011097178578	570
HG	13981000	32.70	4011097177434	575
HG	13988000	91.70	4011097106557	578
HG	13989000	26.40	4011097106564	578
14				
HG	14091000	51.80	4011097177557	572
HG	14095000	73.70	4011097165103	567
HG	14096000	73.70	4011097176222	567
HG	14097000	73.70	4011097236995	567
HG	14098000	73.70	4011097237008	567
HG	14420000	173.70	4011097488424	343
HG	14495000	94.80	4011097255705	345
HG	14780000	470.00	4059625195970	508
HG	14781000	379.50	4059625197110	509
HG	14782000	321.10	4059625198100	510
HG	14785000	407.90	4059625197998	507
HG	14786000	481.20	4059625195994	504
HG	14806000	362.10	4011097732992	525
HG	14820000	470.00	4011097718378	508
HG	14820800	610.70	4011097718361	508

brand	code no.	Euro	EAN	page
HG	14821000	379.50	4011097718354	509
HG	14821800	494.00	4011097718347	509
HG	14822000	321.10	4011097718170	510
HG	14822800	417.60	4011097718330	510
HG	14823000	379.50	4011097718323	511
HG	14834000	418.70	4011097823690	508
HG	14834800	544.20	4011097823683	508
HG	14847000	357.60	4011097823676	507
HG	14847800	465.40	4011097823669	507
HG	14857000	429.60	4011097823652	506
HG	14857800	558.50	4011097823645	506
HG	14870000	277.90	4011097386898	519
HG	14872000	412.00	4011097405032	519
HG	14875000	360.20	4011097391236	520
HG	14877000	487.10	4011097405049	518
HG	14883000	407.90	4011097748559	507
HG	14883800	519.70	4011097748566	507
HG	14884000	481.20	4011097772783	504
HG	14884800	625.50	4011097772790	504
HG	14888000	434.00	4011097752631	511
HG	14890000	51.80	4011097362274	572
HG	14891000	51.80	4011097217253	572
HG	14893000	91.70	4011097260303	574
HG	14896000	51.80	4011097508009	573
HG	14920000	120.30	4011097153759	576
15				
HG	15070000	441.10	4011097613253	277
HG	15070400	441.10	4011097613260	277
HG	15072000	676.80	4011097613291	278
HG	15072400	676.80	4011097613703	278
HG	15074000	441.10	4011097646725	277
HG	15074400	441.10	4011097646732	277
HG	15075000	426.00	4011097613277	277
HG	15075400	426.00	4011097613284	277
HG	15081000	521.90	4011097673608	277
HG	15081400	521.90	4011097672304	277
HG	15084000	545.80	4011097673615	278
HG	15084400	545.80	4011097673622	278
HG	15085000	574.00	4011097673639	278
HG	15085400	574.00	4011097673646	278
HG	15170000	839.30	4011097660844	279
HG	15170400	839.30	4011097660851	279
HG	15172000	874.30	4011097660882	279
HG	15270000	501.90	4011097613734	279
HG	15270400	501.90	4011097613741	279
HG	15275400	526.40	4011097679259	280
HG	15310180	600.00	4011097815602	240
HG	15311180	700.00	4059625034057	241
HG	15312180	800.00	4059625034040	242
HG	15313180	900.00	4059625034033	243
HG	15314180	800.00	4059625034026	244
HG	15346000	259.20	4011097727219	239
HG	15355000	1,174.20	4059625034019	240
HG	15355400	1,174.20	4011097815619	240
HG	15355600	1,174.20	4059625034002	240
HG	15356000	1,387.60	4059625033999	241
HG	15356400	1,387.60	4059625033982	241
HG	15356600	1,387.60	4059625033975	241
HG	15357000	1,601.10	4059625033968	242
HG	15357400	1,601.10	4059625033951	242
HG	15357600	1,601.10	4059625033944	242
HG	15358000	1,814.60	4059625033937	243
HG	15358400	1,814.60	4059625033920	243
HG	15358600	1,814.60	4059625033913	243

brand	code no.	Euro	EAN	page
HG	15359000	1,387.60	4059625033906	244
HG	15359400	1,387.60	4059625032893	244
HG	15359600	1,387.60	4059625032886	244
HG	15380000	1,078.90	4059625201350	240
HG	15380140	1,618.40	4059625241707	240
HG	15380340	1,618.40	4059625241691	240
HG	15380670	1,402.50	4059625241684	240
HG	15380700	1,402.50	4059625201336	240
HG	15380990	1,618.40	4059625241677	240
HG	15381000	1,281.50	4059625201312	241
HG	15381700	1,665.90	4059625201299	241
HG	15382000	1,484.10	4059625201275	242
HG	15382140	2,226.20	4059625241967	242
HG	15382340	2,226.20	4059625241974	242
HG	15382670	1,929.30	4059625241981	242
HG	15382700	1,929.30	4059625201251	242
HG	15382990	2,226.20	4059625241998	242
HG	15384000	1,686.70	4059625201237	243
HG	15384700	2,192.60	4059625201213	243
HG	15412000	292.90	4011097613819	282
HG	15412400	292.90	4011097613826	282
HG	15432000	1,057.60	4011097673660	282
HG	15432400	1,057.60	4011097673677	282
HG	15445000	448.80	4011097613659	281
HG	15445400	448.80	4011097613666	281
HG	15447000	600.90	4011097613796	281
HG	15447400	600.90	4011097613802	281
HG	15472000	803.40	4011097613772	280
HG	15472400	803.40	4011097613789	280
HG	15473000	2,273.80	4011097625003	280
HG	15473400	2,273.80	4011097625010	280
HG	15597000	43.60	4011097625027	260
HG	15665000	395.70	4011097613833	283
HG	15665400	395.70	4011097613840	283
HG	15672000	639.40	4011097614908	282
HG	15672400	639.40	4011097614915	282
HG	15705000	232.70	4011097741727	257
HG	15706000	378.10	4011097741710	257
HG	15707000	378.10	4011097741703	256
HG	15708000	424.40	4011097741697	257
HG	15712000	378.10	4059625028728	256
HG	15714000	424.40	4059625028735	256
HG	15714140	636.60	4059625230244	256
HG	15714340	636.60	4059625230251	256
HG	15714670	594.20	4059625230268	256
HG	15714700	594.20	4059625230275	256
HG	15714990	636.60	4059625230282	256
HG	15734400	482.30	4011097777528	245
HG	15734600	482.30	4011097777627	245
HG	15735400	663.80	4011097777511	246
HG	15735600	663.80	4011097777610	246
HG	15736400	482.30	4011097777504	246
HG	15736600	482.30	4011097777603	246
HG	15737400	663.80	4011097777498	244
HG	15737600	663.80	4011097777597	244
HG	15738400	726.10	4011097777481	245
HG	15738600	726.10	4011097777580	245
HG	15741000	387.90	4011097741369	252
HG	15742000	536.90	4011097741352	253
HG	15743000	584.70	4011097741345	252
HG	15743140	877.10	4059625142424	252
HG	15743340	877.10	4059625244548	252
HG	15743670	818.60	4059625266069	252
HG	15743700	818.60	4059625266076	252

Code Numbers and Trade Prices

brand	code no.	Euro	EAN	page
HG	15743990	877.10	4059625266083	252
HG	15744000	536.90	4011097741338	252
HG	15745000	387.90	4011097741321	253
HG	15747000	447.50	4011097746388	254
HG	15748000	495.40	4011097749631	254
HG	15755000	232.70	4011097741680	258
HG	15756000	378.10	4011097741673	258
HG	15757000	378.10	4011097741666	258
HG	15758000	424.40	4011097741659	258
HG	15758140	636.60	4059625155028	258
HG	15758340	636.60	4059625216682	258
HG	15758670	594.20	4059625266038	258
HG	15758700	594.20	4059625266045	258
HG	15758990	636.60	4059625266052	258
HG	15760000	387.90	4011097719870	249
HG	15761000	536.90	4011097719863	250
HG	15762000	536.90	4011097719856	248
HG	15763000	584.70	4011097719849	248
HG	15763140	877.10	4059625230299	248
HG	15763340	877.10	4059625230909	248
HG	15763670	818.60	4059625230916	248
HG	15763700	818.60	4059625230923	248
HG	15763990	877.10	4059625230930	248
HG	15764000	387.90	4011097719832	250
HG	15765000	716.00	4011097719825	249
HG	15767000	447.50	4011097746364	251
HG	15768000	495.40	4011097749624	251
HG	15771000	1,178.70	4011097613918	259
HG	15771400	1,178.70	4011097613925	259
HG	15773000	270.00	4059625196076	231
HG	15774000	330.00	4059625196069	232
HG	15777000	424.20	4011097625324	260
HG	15930180	250.70	4011097345239	261
HG	15932000	122.80	4011097487984	259
HG	15956000	58.60	4011097629360	267
HG	15970180	87.50	4011097345208	259
HG	15972000	91.80	4011097487960	259
HG	15973180	80.60	4011097345215	262
HG	15974180	83.70	4011097345222	259
HG	15978000	144.40	4011097613932	260
HG	15978400	144.40	4011097613949	260
HG	15981180	159.00	4011097415772	261
HG	15984180	153.20	4011097727073	336
16				
AX	16391000	42.00	4011097111483	573
AX	16884000	38.70	4011097515915	129
AX	16884820	58.10	4011097515922	129
AX	16891000	73.70	4011097235837	572
AX	16991000	42.00	4011097112367	574
AX	16993000	42.00	4011097112411	574
19				
AX	19418000	410.70	4011097664637	312
21				
HG	21140700	14.70	4059625250341	456
HG	21141000	10.00	4059625250358	457
HG	21142000	10.00	4059625250365	457
HG	21143000	10.00	4059625250372	457
HG	21144000	10.00	4059625250389	457
HG	21145000	10.00	4059625250396	458
HG	21146000	10.00	4059625250402	458
24				
HG	24001400	2,520.30	4011097772219	138
HG	24001600	2,520.30	4011097983165	138
HG	24002400	1,489.40	4011097771182	142
HG	24002600	1,489.40	4011097975764	142
HG	24003400	1,603.90	4011097771243	142
HG	24003600	1,603.90	4011097983066	142
HG	24004400	1,947.60	4011097771304	141
HG	24004600	1,947.60	4011097983080	141
HG	24005400	2,062.10	4011097771366	141
HG	24005600	2,062.10	4011097983103	141
HG	24006400	2,176.60	4011097771380	140
HG	24006600	2,176.60	4011097983127	140
HG	24007400	2,291.30	4011097771397	139
HG	24007600	2,291.30	4011097983141	139
HG	24010180	229.10	4011097771175	140
HG	24011400	2,520.30	4011097772226	138
HG	24012400	1,489.40	4011097771151	140
HG	24013400	1,603.90	4011097771229	142
HG	24014400	1,947.60	4011097771281	141
HG	24015400	2,062.10	4011097771342	141
HG	24016400	2,176.60	4011097772202	140
HG	24017400	2,291.30	4011097772332	139
25				
HG	25968000	51.80	4011097460079	561
26				
HG	26014000	88.10	4059625136621	69
HG	26115000	4,057.60	4011097679174	154
HG	26117000	4,839.20	4011097679167	154
HG	26220000	315.40	4011097790992	166
HG	26220140	473.10	4059625264126	166
HG	26220340	473.10	4059625264102	166
HG	26220670	441.60	4059625264089	166
HG	26220700	441.60	4059625264096	166
HG	26220990	473.10	4059625264119	166
HG	26221000	317.40	4011097791104	166
HG	26221140	476.10	4059625203798	166
HG	26221340	476.10	4059625217030	166
HG	26221670	444.40	4059625264058	166
HG	26221700	444.40	4059625264065	166
HG	26221990	476.10	4059625264072	166
HG	26226000	699.00	4059625201084	143
HG	26226700	908.70	4059625201077	143
HG	26227000	699.00	4059625200780	143
HG	26227700	908.70	4059625200797	143
HG	26228000	587.50	4059625201565	144
HG	26228140	881.30	4059625264775	144
HG	26228340	881.30	4059625264751	144
HG	26228670	763.80	4059625264744	144
HG	26228700	763.80	4059625201558	144
HG	26228990	881.30	4059625264768	144
HG	26229000	587.50	4059625200902	144
HG	26229140	881.30	4059625264812	144
HG	26229340	881.30	4059625264799	144
HG	26229670	763.80	4059625264782	144
HG	26229700	763.80	4059625200919	144
HG	26229990	881.30	4059625264805	144
HG	26230000	800.30	4059625200926	145
HG	26230140	1,200.50	4059625264737	145
HG	26230340	1,200.50	4059625264713	145
HG	26230670	1,040.40	4059625264706	145
HG	26230700	1,040.40	4059625201541	145
HG	26230990	1,200.50	4059625264720	145
HG	26231000	688.80	4059625201534	145
HG	26231140	1,033.20	4059625264898	145
HG	26231340	1,033.20	4059625264874	145
HG	26231670	895.50	4059625264867	145
HG	26231700	895.50	4059625201527	145

brand	code no.	Euro	EAN	page
HG	26231990	1,033.20	4059625264881	145
HG	26232000	1,002.90	4059625201510	146
HG	26232700	1,303.70	4059625201503	146
HG	26233000	1,002.90	4059625201497	146
HG	26233700	1,303.70	4059625201480	146
HG	26234000	1,104.20	4059625201473	147
HG	26234140	1,656.30	4059625264850	147
HG	26234340	1,656.30	4059625264836	147
HG	26234670	1,435.40	4059625264829	147
HG	26234700	1,435.40	4059625201466	147
HG	26234990	1,656.30	4059625264843	147
HG	26238000	528.40	4011097853420	156
HG	26238140	792.60	4059625230718	156
HG	26238340	792.60	4059625230725	156
HG	26238670	739.80	4059625230732	156
HG	26238700	739.80	4059625230749	156
HG	26238990	792.60	4059625230756	156
HG	26239000	528.40	4011097975658	156
HG	26243000	455.90	4059625201435	174
HG	26243700	592.60	4059625201428	174
HG	26250000	496.40	4011097853413	157
HG	26250140	744.60	4059625191934	157
HG	26250340	744.60	4059625230763	157
HG	26250670	695.00	4059625230770	157
HG	26250700	695.00	4059625230787	157
HG	26250990	744.60	4059625230794	157
HG	26251000	496.40	4011097975665	157
HG	26252000	800.60	4011097975672	157
HG	26253000	800.60	4011097975689	157
HG	26254180	117.40	4011097975696	158
HG	26257000	315.00	4059625196106	166
HG	26258000	315.00	4059625196090	166
HG	26320000	264.40	4011097804330	86
HG	26320400	264.40	4011097787879	86
HG	26321000	264.40	4011097804323	86
HG	26321400	264.40	4011097787862	86
HG	26322000	275.40	4011097804316	86
HG	26322400	275.40	4011097787855	86
HG	26323000	275.40	4011097804309	86
HG	26323400	275.40	4011097787848	86
HG	26324000	385.60	4011097804293	84
HG	26324400	385.60	4011097787831	84
HG	26325000	385.60	4011097804286	84
HG	26325400	385.60	4011097787824	84
HG	26326000	385.60	4011097804279	85
HG	26326400	385.60	4011097787817	85
HG	26327000	385.60	4011097804262	85
HG	26327400	385.60	4011097787800	85
HG	26328400	139.60	4011097787794	446
HG	26329000	143.20	4011097787787	447
HG	26330400	19.80	4011097780689	74
HG	26331400	17.50	4011097780672	75
HG	26332400	21.90	4011097780665	74
HG	26333400	19.80	4011097780658	75
HG	26334400	19.80	4011097780641	448
HG	26336400	21.90	4011097792064	448
HG	26401000	176.30	4011097804255	116
HG	26402000	187.20	4011097804248	116
HG	26403400	297.40	4011097804231	116
HG	26404400	297.40	4011097804224	116
HG	26410400	62.20	4011097744872	120
HG	26411400	74.10	4011097744865	120
HG	26412400	62.20	4011097760285	120
HG	26413400	74.10	4011097760292	119

brand	code no.	Euro	EAN	page
HG	26420400	58.90	4011097757025	120
HG	26421400	70.50	4011097757018	120
HG	26424400	58.90	4011097757049	120
HG	26425400	70.50	4011097757032	119
HG	26442000	254.70	4011097705941	156
HG	26443000	254.70	4011097705958	156
HG	26453000	25.20	4011097756868	128
HG	26453140	37.80	4059625142448	128
HG	26453340	37.80	4059625308509	128
HG	26453670	35.30	4059625308523	128
HG	26453700	35.30	4059625308516	128
HG	26453990	37.80	4059625308530	128
HG	26455000	25.20	4011097756851	129
HG	26455140	37.80	4011097837291	129
HG	26455340	37.80	4011097837284	129
HG	26455670	35.30	4059625230947	129
HG	26455700	35.30	4059625230954	129
HG	26455990	37.80	4011097837390	129
HG	26456000	150.10	4011097814803	127
HG	26456400	150.10	4011097786902	127
HG	26457000	25.20	4011097756875	129
HG	26457140	37.80	4011097891873	129
HG	26457340	37.80	4011097891866	129
HG	26457670	35.30	4059625304778	129
HG	26457700	35.30	4059625304761	129
HG	26457990	37.80	4011097891972	129
HG	26464000	221.00	4011097689678	167
HG	26465000	221.00	4011097689685	167
HG	26466000	415.90	4011097720562	151
HG	26466400	415.90	4011097720555	151
HG	26467000	380.30	4011097720548	151
HG	26467400	380.30	4011097720531	151
HG	26468000	772.50	4011097720487	148
HG	26468400	772.50	4011097720470	148
HG	26469000	380.30	4011097720524	151
HG	26470000	415.90	4011097720500	151
HG	26470400	415.90	4011097720494	151
HG	26471180	93.90	4011097718637	155
HG	26472000	410.60	4011097718620	155
HG	26481000	410.60	4011097718613	155
HG	26485000	79.40	4011097767536	127
HG	26486000	79.40	4011097767543	127
HG	26487000	79.40	4011097767550	127
HG	26503000	63.40	4011097756820	113
HG	26504000	69.30	4011097756837	113
HG	26505000	45.80	4011097773810	113
HG	26506000	51.60	4011097773803	113
HG	26511000	64.00	4011097857046	561
HG	26511400	64.00	4011097857039	561
HG	26511600	64.00	4011097961286	561
HG	26519000	18.60	4011097693200	117
HG	26520000	86.40	4011097706047	69
HG	26520140	129.60	4059625230824	69
HG	26520340	129.60	4059625221297	69
HG	26520400	86.40	4011097706085	69
HG	26520670	121.00	4059625230817	69
HG	26520700	121.00	4059625230800	69
HG	26520990	129.60	4059625230961	69
HG	26521000	86.40	4011097706054	69
HG	26521400	86.40	4011097706092	69
HG	26522000	234.80	4011097741956	165
HG	26522400	234.80	4011097741963	165
HG	26523000	234.80	4011097741970	165
HG	26523400	234.80	4011097741987	165

Code Numbers and Trade Prices

brand	code no.	Euro	EAN	page
HG	26524000	234.80	4011097751993	164
HG	26524400	234.80	4011097752006	164
HG	26528000	234.80	4011097752068	164
HG	26528400	234.80	4011097752075	164
HG	26530000	86.40	4011097706764	70
HG	26530140	129.60	4059625264027	70
HG	26530340	129.60	4059625264010	70
HG	26530400	86.40	4011097726663	70
HG	26530670	121.00	4059625263990	70
HG	26530700	121.00	4059625264003	70
HG	26530990	129.60	4059625026830	70
HG	26531000	86.40	4011097719115	70
HG	26531140	129.60	4059625265925	70
HG	26531340	129.60	4059625265901	70
HG	26531400	86.40	4011097726946	70
HG	26531670	121.00	4059625265888	70
HG	26531700	121.00	4059625265895	70
HG	26531990	129.60	4059625265918	70
HG	26532400	48.20	4011097792057	101
HG	26533400	46.10	4011097792040	103
HG	26534400	50.60	4011097792033	101
HG	26535400	48.20	4011097792026	103
HG	26536400	53.90	4011097792019	100
HG	26537400	51.60	4011097792002	102
HG	26538400	55.90	4011097791999	100
HG	26539400	53.90	4011097791982	102
HG	26550000	110.50	4011097720067	68
HG	26550400	110.50	4011097720050	68
HG	26551000	110.50	4011097720043	68
HG	26551400	110.50	4011097720036	68
HG	26553400	53.90	4011097791975	102
HG	26554400	48.20	4011097791968	103
HG	26555400	50.60	4011097791951	101
HG	26560400	119.10	4011097744858	91
HG	26561400	119.10	4011097736228	91
HG	26562400	104.40	4011097744841	92
HG	26563400	104.40	4011097736433	92
HG	26564400	92.80	4011097744834	93
HG	26565400	92.80	4011097736426	93
HG	26566400	110.50	4011097767048	93
HG	26567400	34.60	4011097791944	123
HG	26568400	34.60	4011097791937	123
HG	26569400	37.00	4011097791920	123
HG	26570400	125.00	4011097744827	90
HG	26571400	125.00	4011097736419	90
HG	26572400	110.50	4011097744810	91
HG	26573400	110.50	4011097736402	91
HG	26574400	98.70	4011097744803	92
HG	26575400	98.70	4011097736396	92
HG	26576400	139.60	4011097760384	169
HG	26577000	139.60	4011097756783	169
HG	26577400	139.60	4011097756905	169
HG	26578000	139.60	4011097756790	169
HG	26578400	139.60	4011097756493	169
HG	26580400	119.10	4011097753911	87
HG	26581400	119.10	4011097736389	87
HG	26582400	104.40	4011097753904	88
HG	26583400	104.40	4011097736372	88
HG	26584400	92.80	4011097753898	89
HG	26585400	92.80	4011097736365	89
HG	26586400	110.50	4011097767055	90
HG	26590400	125.00	4011097753881	87
HG	26591400	125.00	4011097736358	87
HG	26592400	110.50	4011097753850	88

brand	code no.	Euro	EAN	page
HG	26593400	110.50	4011097736341	88
HG	26594400	98.70	4011097753843	89
HG	26595400	98.70	4011097736334	89
HG	26600000	630.70	4011097754369	160
HG	26601000	667.40	4011097754826	160
HG	26604000	587.90	4011097754383	158
HG	26605000	621.70	4011097754390	159
HG	26606000	257.50	4011097761619	171
HG	26608000	516.00	4011097754840	148
HG	26608400	516.00	4011097754857	148
HG	26609000	553.00	4011097754864	149
HG	26609400	553.00	4011097754376	149
HG	26620000	180.00	4011097706061	80
HG	26620400	180.00	4011097706078	80
HG	26621000	186.10	4011097706306	79
HG	26621400	186.10	4011097706313	79
HG	26622000	180.00	4011097711799	80
HG	26622400	180.00	4011097712000	80
HG	26623000	186.10	4011097712017	79
HG	26623400	186.10	4011097712024	79
HG	26626000	334.70	4011097691893	80
HG	26626400	334.70	4011097692043	80
HG	26630000	180.00	4011097719108	82
HG	26630400	180.00	4011097726953	82
HG	26631000	186.10	4011097719092	82
HG	26631400	186.10	4011097726960	82
HG	26632000	180.00	4011097719085	82
HG	26632400	180.00	4011097726984	82
HG	26633000	186.10	4011097719078	82
HG	26633400	186.10	4011097726991	82
HG	26650400	85.90	4011097757124	98
HG	26651400	77.80	4011097757131	99
HG	26652400	71.70	4011097757148	100
HG	26654400	77.80	4011097760742	99
HG	26655400	71.70	4011097760735	100
HG	26656400	91.70	4011097757155	97
HG	26657400	83.50	4011097757162	98
HG	26658400	77.60	4011097757179	99
HG	26664400	42.60	4011097757186	122
HG	26665400	44.90	4011097760698	122
HG	26666400	48.60	4011097760681	122
HG	26690400	32.50	4011097791913	123
HG	26691400	34.60	4011097791906	123
HG	26692400	37.00	4011097791890	123
HG	26693400	37.00	4011097791883	123
HG	26694400	39.10	4011097791876	123
HG	26700000	116.40	4011097808741	118
HG	26700400	116.40	4011097808734	118
HG	26701000	116.40	4011097808727	119
HG	26701400	116.40	4011097808710	119
HG	26720000	118.40	4011097758107	118
HG	26720400	118.40	4011097758114	118
HG	26721000	118.40	4011097758121	119
HG	26721400	118.40	4011097758138	119
HG	26722000	198.40	4011097770987	168
HG	26723000	198.40	4011097770970	169
HG	26724000	200.50	4011097770963	169
HG	26725000	198.40	4011097770956	169
HG	26726000	198.40	4011097770949	168
HG	26727000	200.50	4011097770932	168
HG	26734000	221.00	4011097731865	167
HG	26790000	750.40	4011097801711	196
HG	26791000	717.70	4011097801704	198
HG	26792000	913.40	4011097801698	198

brand	code no.	Euro	EAN	page
HG	26793000	674.20	4011097806280	199
HG	26794000	752.40	4011097806297	196
HG	26800400	61.60	4011097744599	71
HG	26801400	61.60	4011097736273	71
HG	26802400	47.00	4011097744582	71
HG	26803400	47.00	4011097736266	71
HG	26804400	35.30	4011097744575	71
HG	26805400	35.30	4011097736327	71
HG	26806400	35.30	4011097752037	71
HG	26810400	61.60	4011097750026	70
HG	26811400	61.60	4011097736259	70
HG	26812400	47.00	4011097750033	70
HG	26813400	47.00	4011097736242	70
HG	26814400	35.30	4011097750040	71
HG	26815400	35.30	4011097736235	71
HG	26816400	35.30	4011097752136	71
HG	26823400	34.60	4011097756998	73
HG	26824400	26.50	4011097757100	74
HG	26825400	20.50	4011097757117	74
HG	26827400	26.50	4011097759616	74
HG	26828400	20.50	4011097759623	74
HG	26834400	25.80	4059625130841	74
HG	26840180	111.40	4059625241660	180
HG	26842000	1,266.30	4059625241653	180
HG	26842700	1,646.10	4059625241646	180
HG	26843000	334.30	4059625201411	126
HG	26843700	434.60	4059625201404	126
HG	26844000	253.30	4059625201398	450
HG	26844700	329.20	4059625201381	450
HG	26851000	157.00	4059625216095	118
HG	26851700	204.10	4059625216408	118
HG	26852000	155.00	4059625216415	118
HG	26852700	201.50	4059625216422	118
HG	26856000	141.80	4059625216439	118
HG	26856700	184.40	4059625216446	118
HG	26857000	139.80	4059625216453	118
HG	26857700	181.70	4059625216460	118
HG	26858000	334.30	4059625201374	127
HG	26858700	434.60	4059625201367	127
HG	26864000	96.20	4059625189696	68
HG	26864140	144.30	4059625264935	68
HG	26864340	144.30	4059625264911	68
HG	26864670	125.10	4059625264904	68
HG	26864700	125.10	4059625189702	68
HG	26864990	144.30	4059625264928	68
HG	26865000	96.20	4059625198544	68
HG	26865140	144.30	4059625264973	68
HG	26865340	144.30	4059625264959	68
HG	26865670	125.10	4059625264942	68
HG	26865700	125.10	4059625198575	68
HG	26865990	144.30	4059625264966	68
HG	26866000	81.00	4059625213407	68
HG	26866140	121.50	4059625265710	68
HG	26866340	121.50	4059625265673	68
HG	26866670	105.40	4059625264980	68
HG	26866700	105.40	4059625220054	68
HG	26866990	121.50	4059625265703	68
HG	26867000	81.00	4059625220085	68
HG	26867140	121.50	4059625265758	68
HG	26867340	121.50	4059625265734	68
HG	26867670	105.40	4059625265727	68
HG	26867700	105.40	4059625220092	68
HG	26867990	121.50	4059625265741	68
HG	26890140	1,177.10	4059625265970	197
HG	26890340	1,177.10	4059625265956	197
HG	26890670	1,099.10	4059625265932	197
HG	26890700	1,099.10	4059625265949	197
HG	26890990	1,177.10	4059625265963	197
HG	26891140	1,180.20	4059625266021	197
HG	26891340	1,180.20	4059625266007	197
HG	26891670	1,102.10	4059625265987	197
HG	26891700	1,102.10	4059625265994	197
HG	26891990	1,180.20	4059625266014	197
27				
HG	27008000	2,449.90	4011097691886	216
HG	27008400	2,449.90	4011097662251	216
HG	27013400	270.20	4011097745152	107
HG	27014400	275.90	4011097745169	107
HG	27028400	3,207.80	4011097771106	179
HG	27029400	3,666.00	4011097771120	178
HG	27030400	226.90	4011097756233	110
HG	27031400	232.70	4011097756240	110
HG	27032000	311.10	4011097679655	109
HG	27033000	317.80	4011097679662	108
HG	27034000	305.70	4011097679679	109
HG	27035000	312.40	4011097679686	108
HG	27036000	515.10	4011097679303	106
HG	27036400	515.10	4011097691824	106
HG	27037000	522.50	4011097679310	106
HG	27037400	522.50	4011097691831	106
HG	27038000	468.40	4011097727936	106
HG	27038400	468.40	4011097727943	106
HG	27039000	475.70	4011097727950	106
HG	27039400	475.70	4011097727967	106
HG	27081400	270.20	4011097755243	107
HG	27082400	275.90	4011097755250	107
HG	27085000	334.50	4011097537566	109
HG	27086000	312.00	4011097537573	109
HG	27106400	3,666.00	4011097771113	178
HG	27109400	3,207.80	4011097771090	179
HG	27112000	1,364.40	4011097679549	183
HG	27112400	1,364.40	4011097679556	183
HG	27113000	1,486.80	4011097679563	184
HG	27113400	1,486.80	4011097679570	184
HG	27114000	1,043.20	4011097679587	190
HG	27115000	834.70	4011097679594	191
HG	27116000	834.70	4011097690117	191
HG	27117000	1,056.10	4011097690124	192
HG	27126000	1,620.20	4011097716954	182
HG	27126400	1,620.20	4011097716947	182
HG	27127000	1,920.00	4011097716930	181
HG	27127400	1,920.00	4011097716923	181
HG	27129000	1,007.30	4011097718132	189
HG	27129400	1,007.30	4011097718125	189
HG	27133000	1,196.20	4011097718118	188
HG	27133400	1,196.20	4011097718101	188
HG	27135000	469.30	4011097690131	207
HG	27154000	459.70	4011097625225	208
HG	27185000	663.60	4011097689692	205
HG	27188000	663.60	4011097690148	205
HG	27222000	623.50	4011097690155	206
HG	27223000	861.80	4011097690162	206
HG	27224000	503.90	4011097690179	207
HG	27247400	330.00	4011097770000	202
HG	27248400	330.00	4011097770024	195
HG	27253400	672.00	4011097745114	200
HG	27254400	672.00	4011097751740	200
HG	27255400	636.60	4011097751733	202

Code Numbers and Trade Prices

brand	code no.	Euro	EAN	page
HG	27256400	672.00	4011097751726	193
HG	27257400	672.00	4011097751719	193
HG	27258400	636.60	4011097751702	195
HG	27264400	408.80	4011097751290	215
HG	27265400	408.80	4011097751283	215
HG	27266400	385.40	4011097751276	216
HG	27267000	429.60	4011097775944	212
HG	27268000	431.70	4011097775937	212
HG	27269000	396.60	4011097775920	214
HG	27270000	352.50	4011097775913	214
HG	27271000	429.60	4011097775906	209
HG	27281000	431.70	4011097775890	209
HG	27283000	1,620.20	4011097755205	182
HG	27283400	1,620.20	4011097755212	182
HG	27284000	396.60	4011097775883	211
HG	27286000	1,364.40	4011097754246	183
HG	27286400	1,364.40	4011097754253	183
HG	27288000	1,620.20	4011097751245	185
HG	27288400	1,620.20	4011097751238	185
HG	27289000	352.50	4011097775876	211
HG	27294000	800.90	4011097773896	164
HG	27295000	800.90	4011097775500	165
HG	27296000	1,259.10	4011097775517	149
HG	27297000	1,133.00	4011097775524	152
HG	27298000	594.90	4011097801681	210
HG	27320000	594.90	4011097801674	213
HG	27337000	499.10	4011097720609	150
HG	27337400	499.10	4011097720593	150
HG	27351400	848.80	4011097769011	201
HG	27352400	848.80	4011097769028	194
HG	27355000	52.30	4011097815732	115
HG	27356000	57.80	4011097815749	115
HG	27361000	1,334.30	4011097971735	187
HG	27362000	1,334.30	4011097971728	187
HG	27363000	1,558.40	4011097971711	186
HG	27364000	1,558.40	4011097971704	186
HG	27370000	517.40	4011097625126	159
HG	27371000	625.80	4011097625140	158
HG	27375000	522.00	4011097655727	159
HG	27376000	621.70	4011097691435	159
HG	27378000	534.80	4011097720586	150
HG	27378400	534.80	4011097720579	150
HG	27380000	479.30	4011097625119	159
HG	27381000	587.90	4011097625133	158
HG	27383000	483.80	4011097655734	159
HG	27384000	516.00	4011097706870	148
HG	27384400	516.00	4011097706887	148
HG	27385000	553.00	4011097706894	149
HG	27385400	553.00	4011097707303	149
HG	27388000	78.60	4011097783253	173
HG	27389000	78.60	4011097783260	173
HG	27389140	118.30	4059625234471	173
HG	27389340	118.30	4059625234488	173
HG	27389670	110.60	4059625234495	173
HG	27389700	110.60	4059625234464	173
HG	27389990	118.30	4059625234457	173
HG	27390000	1,147.10	4011097619613	152
HG	27390400	1,147.10	4011097619620	152
HG	27393000	55.20	4011097769837	173
HG	27393140	82.80	4059625234518	173
HG	27393340	82.80	4059625234525	173
HG	27393670	77.30	4059625234440	173
HG	27393700	77.30	4059625234501	173
HG	27393990	82.80	4059625234532	173

brand	code no.	Euro	EAN	page
HG	27405000	614.00	4011097592466	164
HG	27405090	767.50	4011097815701	164
HG	27409000	57.70	4011097476124	172
HG	27411000	21.10	4011097112930	172
HG	27412000	57.70	4011097112947	172
HG	27413000	81.60	4011097112978	172
HG	27413140	122.40	4011097819983	172
HG	27413340	122.40	4011097819976	172
HG	27413670	114.20	4059625264034	172
HG	27413700	114.20	4059625264041	172
HG	27413990	122.40	4011097820064	172
HG	27414000	40.10	4011097614083	129
HG	27424000	653.10	4011097592459	163
HG	27424090	816.30	4011097806426	163
HG	27437000	1,237.60	4011097619866	152
HG	27437400	1,237.60	4011097617725	152
HG	27438000	70.30	4011097113128	172
HG	27441000	48.60	4011097537580	168
HG	27443000	76.00	4011097537597	167
HG	27446000	81.60	4011097759746	172
HG	27450000	197.60	4011097587431	167
HG	27452000	83.60	4011097235219	128
HG	27453000	30.60	4011097514383	128
HG	27454000	25.50	4011097113258	128
HG	27454140	38.30	4011097892863	128
HG	27454340	38.30	4011097892825	128
HG	27454670	35.70	4059625266090	128
HG	27454700	35.70	4059625266106	128
HG	27454990	38.30	4011097113425	128
HG	27456000	55.00	4011097526782	128
HG	27458000	49.30	4011097113449	128
HG	27461000	561.50	4011097528205	162
HG	27463000	521.70	4011097528229	163
HG	27464000	394.60	4011097528236	163
HG	27467000	55.00	4011097759753	173
HG	27474000	556.80	4011097413693	162
HG	27475000	257.50	4011097226460	171
HG	27477000	517.10	4011097413709	163
HG	27478000	389.90	4011097415819	163
HG	27479000	55.00	4011097381138	173
HG	27492000	690.80	4011097583556	160
HG	27493000	667.40	4011097563831	160
HG	27494000	630.70	4011097563824	160
HG	27505000	29.40	4011097678733	128
HG	27506000	33.40	4011097678726	128
HG	27521000	17.80	4011097157818	125
HG	27558000	34.90	4011097570228	124
HG	27559000	37.00	4011097570242	124
HG	27574000	54.80	4011097663968	121
HG	27575000	56.50	4011097663975	121
HG	27576000	30.30	4011097663982	124
HG	27577000	33.20	4011097663999	124
HG	27592000	62.90	4011097537436	121
HG	27593000	87.50	4011097537443	121
HG	27594000	65.30	4011097537450	121
HG	27595000	93.50	4011097537474	121
HG	27607000	399.40	4059625137161	161
HG	27609000	50.20	4011097626871	115
HG	27610000	81.00	4011097537504	115
HG	27611000	72.30	4011097537511	115
HG	27614000	55.90	4011097570167	115
HG	27615000	52.80	4011097570174	115
HG	27617000	162.30	4011097594590	117
HG	27617820	243.40	4011097594903	117

brand	code no.	Euro	EAN	page
HG	27620000	368.60	4059625137178	161
HG	27623000	337.90	4059625137185	162
HG	27630000	710.00	4059625196052	203
HG	27633000	923.30	4059625154892	190
HG	27633140	1,385.00	4059625230978	190
HG	27633340	1,385.00	4059625230985	190
HG	27633670	1,292.60	4059625230992	190
HG	27633700	1,292.60	4059625231005	190
HG	27633990	1,385.00	4059625231012	190
HG	27636000	267.90	4011097587448	112
HG	27640000	298.80	4011097857022	111
HG	27640400	298.80	4011097857015	111
HG	27640600	298.80	4011097961262	111
HG	27645000	405.60	4011097857008	111
HG	27645400	405.60	4011097856995	111
HG	27645600	405.60	4011097961279	111
HG	27646000	459.00	4011097856988	83
HG	27646400	459.00	4011097856971	83
HG	27647000	459.00	4011097856964	83
HG	27647400	459.00	4011097856957	83
HG	27648000	352.30	4011097856940	83
HG	27648400	352.30	4011097856933	83
HG	27649000	352.30	4011097856926	83
HG	27649400	352.30	4011097856919	83
HG	27652000	65.10	4011097607139	105
HG	27653000	112.20	4011097607146	95
HG	27654000	183.70	4059625154908	81
HG	27660000	710.00	4059625196045	203
HG	27667000	189.80	4059625154915	81
HG	27668000	121.40	4059625157077	119
HG	27669000	119.30	4059625157084	119
HG	27671000	349.50	4059625214145	78
HG	27672000	349.50	4059625214152	78
HG	27673000	450.80	4059625214169	78
HG	27674000	450.80	4059625214176	78
HG	27687000	875.00	4059625196038	204
HG	27694000	182.30	4059625261309	171
HG	27694140	273.50	4059625266199	171
HG	27694340	273.50	4059625266175	171
HG	27694670	255.20	4059625266168	171
HG	27694700	255.20	4059625261316	171
HG	27694990	273.50	4059625266182	171
HG	27704000	68.50	4011097710495	114
HG	27717000	86.20	4011097664828	96
HG	27724000	93.60	4011097664835	96
HG	27728000	56.50	4011097664859	105
HG	27729000	59.60	4011097664866	105
HG	27762000	60.80	4011097570181	104
HG	27763000	57.20	4011097570198	104
HG	27764000	63.30	4011097610221	104
HG	27766000	75.20	4011097570204	103
HG	27767000	71.80	4011097570211	103
HG	27771000	107.80	4011097537290	95
HG	27772000	99.40	4011097537405	95
HG	27774000	134.60	4011097537412	94
HG	27776000	108.70	4011097537528	95
HG	27791000	187.00	4011097594743	97
HG	27802000	219.80	4011097679600	81
HG	27802400	219.80	4011097679617	81
HG	27803000	226.80	4011097679624	81
HG	27803400	226.80	4011097679631	81
HG	27812400	203.70	4011097803265	239
HG	27813400	212.60	4011097803272	110
HG	27833400	232.20	4059625039175	108
HG	27844000	275.30	4011097619637	111
HG	27853000	415.20	4011097622217	94
HG	27853400	415.20	4011097617718	94
HG	27856000	220.80	4011097720029	79
HG	27856400	220.80	4011097720012	79
HG	27857000	228.10	4011097720005	79
HG	27857400	228.10	4011097719894	79
HG	27939670	1,938.00	4059625321546	157
HG	27999000	203.50	4011097662268	216
28				
HG	28010000	293.80	4059625203026	464
HG	28010140	440.70	4059625241639	464
HG	28010340	440.70	4059625241622	464
HG	28010670	411.30	4059625241615	464
HG	28010700	411.30	4059625241608	464
HG	28010990	440.70	4059625241592	464
HG	28016000	60.80	4059625206676	465
HG	28020000	293.80	4059625203002	464
HG	28021000	152.00	4059625206690	465
HG	28071000	26.40	4011097115498	566
HG	28072000	4.10	4011097436920	133
HG	28132000	36.00	4011097557854	132
HG	28134000	39.50	4011097557861	132
HG	28136000	37.60	4011097557847	132
HG	28167000	16.30	4011097796055	133
HG	28168000	17.00	4011097796062	133
HG	28169000	21.40	4011097796079	133
HG	28248000	45.00	4059625024799	132
HG	28249000	43.00	4059625024782	132
HG	28262000	12.90	4011097314044	133
HG	28264000	18.30	4011097314051	133
HG	28266000	13.70	4011097260860	133
HG	28272000	23.10	4011097314013	132
HG	28272140	34.70	4011097838779	132
HG	28272340	34.70	4011097838748	132
HG	28272450	29.00	4011097327099	132
HG	28272670	29.00	4059625302125	132
HG	28272700	29.00	4059625302132	132
HG	28272990	34.70	4011097838984	132
HG	28274000	26.60	4011097314020	132
HG	28276000	25.00	4011097314037	560
HG	28276030	42.00	4011097667164	560
HG	28276090	51.80	4011097327143	560
HG	28276140	37.50	4011097839677	560
HG	28276340	37.50	4011097839639	560
HG	28276430	42.00	4011097667195	560
HG	28276450	31.30	4011097327150	560
HG	28276460	42.00	4011097667201	560
HG	28276480	42.00	4011097667218	560
HG	28276610	42.00	4011097667225	560
HG	28276650	51.80	4011097667232	560
HG	28276670	35.00	4059625231029	560
HG	28276680	63.20	4011097327167	560
HG	28276700	35.00	4059625231036	560
HG	28276800	37.50	4011097411804	560
HG	28276810	42.00	4011097411828	560
HG	28276880	42.00	4011097327181	560
HG	28276990	37.50	4011097839950	560
HG	28307000	100.40	4011097280011	579
HG	28321000	19.90	4011097116587	125
HG	28324000	27.70	4011097594958	126
HG	28328000	34.30	4011097734514	126
HG	28331000	23.70	4011097487311	125
HG	28331140	35.60	4011097830452	125

brand	code no.	Euro	EAN	page
HG	28331340	35.60	4011097830421	125
HG	28331670	33.20	4059625273708	125
HG	28331700	33.20	4059625273692	125
HG	28331800	35.50	4011097487335	125
HG	28331990	35.60	4011097830698	125
HG	28335000	34.30	4011097734293	126
HG	28346000	23.20	4011097116969	448
HG	28387000	45.60	4059625214121	125
HG	28387140	68.40	4059625231043	125
HG	28387340	68.40	4059625231050	125
HG	28387670	63.80	4059625231067	125
HG	28387700	63.80	4059625231074	125
HG	28387990	68.40	4059625231081	125
HG	28389000	42.00	4011097254418	579
HG	28412180	114.20	4011097502809	154
HG	28414180	118.40	4011097591766	153
HG	28417000	4,057.50	4011097591742	153
HG	28418000	4,838.60	4011097591759	153
HG	28423000	42.60	4011097570136	170
HG	28424000	43.10	4011097570143	170
HG	28425000	53.50	4011097570150	170
HG	28430000	140.40	4011097610948	174
HG	28430400	140.40	4011097615936	174
HG	28433000	1,295.60	4011097660936	155
HG	28433400	1,295.60	4011097681542	155
HG	28462000	55.60	4011097607184	168
HG	28466000	99.10	4011097192437	174
HG	28467000	114.80	4011097235264	174
HG	28496000	199.50	4011097141909	171
HG	28535000	35.60	4011097537306	73
HG	28536000	63.20	4011097537016	72
HG	28536330	91.70	4011097681177	560
HG	28536430	91.70	4011097681160	560
HG	28536450	91.70	4011097681153	560
HG	28536460	91.70	4011097681146	560
HG	28536610	91.70	4011097681115	560
HG	28536710	91.70	4011097681122	560
HG	28536810	91.70	4011097706634	560
HG	28536880	91.70	4011097706641	560
HG	28537000	40.40	4011097537269	73
HG	28538000	67.80	4011097537276	72
HG	28539000	77.10	4011097591469	73
HG	28548000	146.80	4011097610023	72
HG	28548090	183.60	4011097806433	72
HG	28557000	165.10	4011097617701	72
HG	28557400	165.10	4011097618197	72
HG	28558000	103.90	4011097625102	72
HG	28558400	103.90	4011097617688	72
HG	28561000	27.70	4011097570105	448
HG	28562000	21.40	4011097570112	75
HG	28563000	37.60	4011097570129	75
HG	28567000	169.60	4011097641812	72
HG	28567400	169.60	4011097641829	72
HG	28568000	108.80	4011097641836	72
HG	28568400	108.80	4011097641843	72
HG	28580000	29.00	4011097664804	73
HG	28583000	33.90	4011097664811	73
HG	28585000	17.50	4011097664842	75
HG	28587000	110.50	4011097679327	69
HG	28587400	110.50	4011097679334	69
HG	28588000	110.50	4011097679341	69
HG	28588400	110.50	4011097679358	69
HG	28631000	120.60	4011097487175	114
HG	28631140	180.90	4059625231098	114
HG	28631340	180.90	4059625229606	114
HG	28631670	168.80	4059625231104	114
HG	28631700	168.80	4059625231111	114
HG	28631820	180.90	4011097499574	114
HG	28631990	180.90	4059625231128	114
HG	28632000	112.60	4011097487199	114
HG	28632140	168.90	4059625231135	114
HG	28632340	168.90	4059625231142	114
HG	28632670	157.60	4059625231159	114
HG	28632700	157.60	4059625231166	114
HG	28632990	168.90	4059625231173	114
HG	28650000	16.50	4011097118789	560
HG	28662000	112.90	4011097723709	114
HG	28663000	118.90	4011097723716	114
HG	28672000	26.40	4011097118833	560
HG	28672450	51.80	4011097118857	560
HG	28672880	42.00	4011097151076	560
HG	28675000	26.40	4011097118901	562
HG	28678000	14.70	4011097537283	117
HG	28679000	36.10	4011097487557	117
HG	28684000	14.70	4011097205588	562
HG	28685000	26.40	4011097118970	562
HG	28694000	32.70	4011097591735	112
HG	28698000	73.80	4011097413686	561
31				
HG	31015000	244.80	4059625130889	339
HG	31016000	256.60	4059625130872	339
HG	31022000	344.90	4011097576602	340
HG	31023000	332.80	4011097646084	340
HG	31060000	264.10	4011097484006	339
HG	31063000	254.50	4011097719344	437
HG	31068000	251.80	4011097540566	339
HG	31074000	338.40	4011097660950	327
HG	31080000	233.00	4011097660967	327
HG	31081000	301.70	4011097660974	328
HG	31082000	315.10	4011097660981	329
HG	31084000	226.20	4011097661001	327
HG	31085000	294.80	4011097661018	329
HG	31086000	322.10	4011097661025	329
HG	31087000	308.50	4011097651231	328
HG	31088000	219.50	4011097661032	327
HG	31091000	42.00	4011097205564	572
HG	31100000	689.40	4011097519210	341
HG	31101000	635.80	4011097519227	341
HG	31102000	730.80	4011097519234	341
HG	31103000	675.70	4011097519241	341
HG	31121000	237.10	4011097691527	327
HG	31130000	97.10	4011097679396	387
HG	31131000	123.30	4011097692425	387
HG	31132000	168.40	4011097678030	383
HG	31159000	324.50	4011097677903	339
HG	31160000	293.30	4011097497419	342
HG	31161000	324.50	4011097641850	339
HG	31162000	327.60	4011097641867	340
HG	31163000	356.20	4011097641874	340
HG	31166000	205.80	4011097661049	329
HG	31171000	472.70	4011097679112	388
HG	31172000	429.00	4011097679129	388
HG	31173000	494.70	4011097679136	388
HG	31174000	473.30	4011097679143	388
HG	31183000	288.10	4011097661056	328
HG	31184000	308.30	4011097692319	329
HG	31185000	281.00	4011097705149	328
HG	31186000	212.40	4011097710402	327

brand	code no.	Euro	EAN	page
HG	31187000	308.50	4011097674056	328
HG	31190000	727.20	4011097661063	334
HG	31203000	237.10	4011097719337	437
HG	31204000	231.50	4011097719320	327
HG	31251000	284.10	4011097718590	329
HG	31261000	264.10	4011097484013	342
HG	31280000	271.60	4011097661070	330
HG	31285000	290.80	4011097661094	330
HG	31300000	352.50	4011097801667	319
HG	31300090	440.70	4011097801643	319
HG	31301000	352.50	4011097801629	319
HG	31301090	440.70	4011097801612	319
HG	31302000	374.60	4011097801605	319
HG	31302090	468.10	4011097801582	319
HG	31303000	440.70	4011097801568	319
HG	31303090	550.80	4011097801544	319
HG	31306000	528.80	4011097802329	320
HG	31306090	661.00	4011097802305	320
HG	31307000	550.80	4011097802282	320
HG	31307090	688.40	4011097802268	320
HG	31320000	385.60	4011097801520	321
HG	31320090	484.70	4011097801513	321
HG	31330000	484.70	4011097802244	320
HG	31330090	605.90	4011097802220	320
HG	31331000	506.70	4011097802206	320
HG	31331090	633.40	4011097802183	320
HG	31340000	462.60	4011097801506	322
HG	31340090	578.30	4011097801490	322
HG	31345000	313.90	4011097801483	322
HG	31345090	396.60	4011097801476	322
HG	31360000	352.50	4011097801469	323
HG	31360090	440.70	4011097801452	323
HG	31365000	280.90	4011097801445	324
HG	31365090	352.50	4011097801438	324
HG	31416000	181.40	4011097686486	343
HG	31417000	168.50	4011097686479	343
HG	31422000	364.70	4011097722399	334
HG	31423000	303.00	4011097722702	333
HG	31441000	672.00	4011097812106	323
HG	31441090	842.70	4011097812113	323
HG	31442000	727.20	4011097661100	335
HG	31443000	565.70	4011097645735	344
HG	31445000	1,817.60	4011097809656	321
HG	31445090	2,313.30	4011097809632	321
HG	31446000	722.60	4011097641126	344
HG	31447000	722.60	4011097712246	344
HG	31449000	733.60	4011097813424	323
HG	31449090	919.80	4011097813431	323
HG	31451000	329.00	4011097748450	332
HG	31454000	212.40	4011097748443	332
HG	31456000	198.80	4011097748467	335
HG	31460000	344.40	4011097484020	342
HG	31465000	237.00	4011097488547	343
HG	31466000	376.50	4011097488554	343
HG	31471000	1,603.90	4011097760667	331
HG	31480000	303.00	4011097656687	331
HG	31484000	109.60	4011097661117	333
HG	31487000	329.00	4011097661124	332
HG	31493000	212.40	4011097661131	332
HG	31494000	203.50	4011097661148	333
HG	31509000	123.00	4011097755847	384
HG	31513000	118.60	4011097719313	384
HG	31515000	300.70	4011097699356	419
HG	31517000	123.00	4011097679402	384

brand	code no.	Euro	EAN	page
HG	31518000	149.00	4011097679419	385
HG	31519000	181.40	4011097679426	386
HG	31521000	297.60	4011097722900	393
HG	31523000	250.70	4011097722917	392
HG	31531000	184.90	4011097795201	386
HG	31532000	179.60	4011097795218	386
HG	31539000	105.30	4011097734026	383
HG	31603000	124.70	4011097719306	439
HG	31604000	105.30	4011097706160	383
HG	31607000	129.50	4011097679433	384
HG	31608000	155.40	4011097679440	385
HG	31609000	187.80	4011097679457	386
HG	31621000	129.50	4011097691510	384
HG	31629000	126.50	4011097658223	389
HG	31652000	198.80	4011097708584	336
HG	31657000	129.50	4011097696089	385
HG	31658000	155.40	4011097696096	385
HG	31660000	264.10	4011097484037	345
HG	31665000	214.90	4011097488585	345
HG	31677000	37.20	4011097665290	260
HG	31680000	256.40	4011097656694	335
HG	31685000	198.80	4011097661155	336
HG	31686000	96.00	4011097661162	336
HG	31730000	105.30	4011097590769	383
HG	31732000	98.00	4011097602424	383
HG	31733000	98.00	4011097590783	383
HG	31738000	105.30	4011097646305	383
HG	31741180	118.60	4011097477237	333
HG	31780000	127.20	4011097503264	528
HG	31784000	149.30	4011097605876	528
HG	31791000	32.70	4011097483535	573
HG	31793000	32.70	4011097506005	572
HG	31803000	281.00	4011097641881	528
HG	31804000	136.60	4011097641898	527
HG	31806000	121.10	4011097641904	527
HG	31806800	157.30	4011097654829	527
HG	31815000	255.00	4011097718187	526
HG	31815670	357.00	4059625231180	526
HG	31815800	331.70	4011097718309	526
HG	31816000	124.90	4011097646312	527
HG	31817000	196.70	4011097718194	526
HG	31817670	275.40	4059625231197	526
HG	31817800	256.20	4011097726717	526
HG	31820000	171.60	4011097679464	527
HG	31820670	240.20	4059625231203	527
HG	31820800	223.80	4011097679471	527
HG	31821000	171.60	4059625196700	527
HG	31821800	223.80	4059625197974	527
HG	31822000	189.40	4011097679488	527
HG	31823000	281.10	4011097708027	527
HG	31825000	163.30	4011097708041	528
HG	31826000	121.10	4059625196694	527
HG	31827000	196.70	4059625196786	526
HG	31833000	255.00	4059625196717	526
HG	31910000	115.60	4011097725819	384
HG	31911000	141.90	4011097725833	441
HG	31913000	147.70	4011097725864	442
HG	31914000	109.70	4011097757421	384
HG	31915000	135.50	4011097757438	441
HG	31916000	119.10	4011097725857	442
HG	31917000	135.50	4011097757445	435
HG	31920000	105.30	4011097591506	388
HG	31922000	105.30	4011097706177	388
HG	31923000	134.50	4011097766072	386

Code Numbers and Trade Prices

brand	code no.	Euro	EAN	page
HG	31926000	122.80	4011097646688	389
HG	31927000	147.70	4011097728544	389
HG	31928000	105.30	4011097646329	389
HG	31930000	136.80	4011097629889	392
HG	31931000	127.70	4011097629896	392
HG	31936000	364.50	4011097689722	393
HG	31937000	246.60	4011097689739	387
HG	31938000	136.80	4011097646336	392
HG	31940000	129.50	4011097591520	390
HG	31945000	131.20	4011097602523	390
HG	31946000	200.60	4011097602547	390
HG	31947000	48.00	4011097602561	391
HG	31948000	129.50	4011097646343	390
HG	31951000	101.50	4011097719290	439
HG	31952000	94.40	4011097719283	383
HG	31960000	108.50	4011097591544	394
HG	31961000	40.90	4059625194195	395
HG	31964000	123.30	4011097708560	395
HG	31965000	123.30	4011097602615	394
HG	31967000	40.90	4011097602653	395
HG	31968000	108.50	4011097646350	394
HG	31971000	105.40	4011097641539	278
HG	31991000	42.00	4011097386836	572
32				
HG	32020000	200.20	4011097397382	376
HG	32031000	191.70	4011097397399	376
HG	32032000	259.60	4011097399287	376
HG	32070000	299.50	4011097473574	376
HG	32092000	42.00	4011097424101	572
HG	32095000	42.00	4011097494470	572
HG	32122000	48.50	4011097722818	76
HG	32127000	46.00	4011097722801	76
HG	32128000	82.50	4011097412863	76
HG	32129000	80.80	4011097617909	76
HG	32420000	253.50	4011097397894	377
HG	32475000	172.50	4011097397962	377
HG	32477000	307.20	4011097399430	377
HG	32500000	250.80	4011097812786	298
HG	32500140	376.20	4059625229286	298
HG	32500340	376.20	4059625229293	298
HG	32500670	351.10	4059625231210	298
HG	32500700	351.10	4059625231227	298
HG	32500990	376.20	4059625229309	298
HG	32501000	234.80	4011097812762	297
HG	32502000	256.20	4011097812755	298
HG	32503000	261.60	4011097812724	298
HG	32506000	266.90	4011097812687	299
HG	32507000	272.20	4011097812649	299
HG	32507140	408.30	4059625229316	299
HG	32507340	408.30	4059625229330	299
HG	32507670	381.10	4059625212455	299
HG	32507700	381.10	4059625212462	299
HG	32507990	408.30	4059625229347	299
HG	32508000	277.50	4011097812625	299
HG	32511000	373.60	4011097812588	300
HG	32511140	560.40	4059625222539	300
HG	32511340	560.40	4059625222546	300
HG	32511670	523.00	4059625231234	300
HG	32511700	523.00	4059625231241	300
HG	32511990	560.40	4059625222553	300
HG	32512000	384.20	4011097812540	300
HG	32512140	576.30	4059625229354	300
HG	32512340	576.30	4059625229378	300
HG	32512670	537.90	4059625231500	300

brand	code no.	Euro	EAN	page
HG	32512700	537.90	4059625231517	300
HG	32512990	576.30	4059625229385	300
HG	32514000	357.60	4011097810973	303
HG	32515000	373.60	4011097835297	304
HG	32515140	560.40	4059625229392	304
HG	32515340	560.40	4059625229408	304
HG	32515670	523.00	4059625231524	304
HG	32515700	523.00	4059625231531	304
HG	32515990	560.40	4059625229415	304
HG	32520000	352.30	4011097812472	306
HG	32520140	528.50	4059625229446	306
HG	32520340	528.50	4059625229453	306
HG	32520670	493.20	4059625231548	306
HG	32520700	493.20	4059625231555	306
HG	32520990	528.50	4059625229460	306
HG	32522000	357.60	4011097812441	306
HG	32525000	320.20	4011097835280	302
HG	32526000	341.60	4011097835273	302
HG	32526140	512.40	4059625229422	302
HG	32526340	512.40	4059625204672	302
HG	32526670	478.20	4059625231562	302
HG	32526700	478.20	4059625231579	302
HG	32526990	512.40	4059625229439	302
HG	32530000	1,120.80	4011097835266	305
HG	32531000	854.00	4011097835259	310
HG	32532000	1,654.50	4011097835242	307
HG	32532140	2,481.80	4059625229491	307
HG	32532340	2,481.80	4059625229507	307
HG	32532670	2,316.30	4059625231586	307
HG	32532700	2,316.30	4059625231593	307
HG	32532990	2,481.80	4059625229514	307
HG	32540000	331.00	4011097812410	308
HG	32540140	496.50	4059625231708	308
HG	32540340	496.50	4059625229477	308
HG	32540670	463.40	4059625231715	308
HG	32540700	463.40	4059625231722	308
HG	32540990	496.50	4059625231739	308
HG	32542000	213.40	4059625007266	311
HG	32543000	320.20	4011097835235	311
HG	32543140	480.30	4059625231746	311
HG	32543340	480.30	4059625231753	311
HG	32543670	448.30	4059625231760	311
HG	32543700	448.30	4059625231777	311
HG	32543990	480.30	4059625231784	311
HG	32545000	224.20	4011097826097	309
HG	32545140	336.30	4059625231791	309
HG	32545340	336.30	4059625229484	309
HG	32545670	313.90	4059625231807	309
HG	32545700	313.90	4059625231814	309
HG	32545990	336.30	4059625231821	309
HG	32546000	320.20	4011097826073	309
HG	32546140	480.30	4059625231838	309
HG	32546340	480.30	4059625231845	309
HG	32546670	448.30	4059625231852	309
HG	32546700	448.30	4059625231869	309
HG	32546990	480.30	4059625231876	309
HG	32548000	266.90	4011097835228	311
HG	32550000	640.40	4011097835211	312
HG	32551000	480.40	4011097835204	313
HG	32552000	640.40	4011097835198	314
HG	32553000	480.40	4011097835181	315
HG	32560000	224.20	4011097812373	316
HG	32560140	336.30	4059625241585	316
HG	32560340	336.30	4059625241578	316

brand	code no.	Euro	EAN	page
HG	32560670	313.90	4059625241561	316
HG	32560700	313.90	4059625241554	316
HG	32560990	336.30	4059625241547	316
HG	32565000	208.20	4011097826066	317
HG	32565140	312.30	4059625231883	317
HG	32565340	312.30	4059625231890	317
HG	32565670	291.50	4059625231906	317
HG	32565700	291.50	4059625231913	317
HG	32565990	312.30	4059625231920	317
HG	32570000	298.80	4011097812335	297
HG	32571000	309.60	4011097812304	297
HG	32572000	427.00	4011097812274	297
HG	32620000	202.60	4011097399423	378
HG	32675000	160.80	4011097398006	379
HG	32841000	331.80	4011097521565	520
HG	32842000	353.60	4011097523071	521
HG	32845000	331.80	4059625195956	520
HG	32851000	236.90	4011097521558	521
HG	32857000	236.90	4059625195987	521
33				
HG	33091000	42.00	4011097236018	572
HG	33891000	42.00	4011097362304	572
35				
AX	35891800	118.90	4011097238678	573
AX	35893800	183.40	4011097363301	575
36				
AX	36391000	73.70	4011097233413	574
AX	36991000	42.00	4011097233338	574
40				
HG	40068000	16.50	4011097218939	452
HG	40088000	16.50	4011097120461	452
HG	40089000	51.80	4011097147208	452
HG	40418000	101.80	4011097191669	556
HG	40418800	152.70	4011097304342	556
HG	40438000	57.00	4059625131589	556
HG	40438340	82.50	4059625297469	556
HG	40438670	77.00	4059625297452	556
HG	40438800	74.20	4059625131596	556
HG	40448000	77.80	4059625131602	556
HG	40448670	105.00	4059625297445	556
HG	40448800	101.10	4059625131619	556
HG	40468000	77.80	4059625131626	556
HG	40468670	105.00	4059625297438	556
HG	40468800	101.10	4059625131633	556
HG	40511000	17.20	4011097584805	450
HG	40511820	25.80	4011097585246	450
HG	40512000	85.70	4011097584584	450
HG	40512820	128.60	4011097585284	450
HG	40513000	85.70	4011097584812	451
HG	40513820	128.60	4011097585222	451
HG	40514000	114.30	4011097584829	450
HG	40514820	171.40	4011097585314	450
HG	40515000	71.70	4011097584843	450
HG	40515820	107.60	4011097585291	450
HG	40516000	100.10	4011097584591	451
HG	40516820	150.10	4011097585239	451
HG	40517000	57.20	4011097584836	451
HG	40517820	85.90	4011097585338	451
HG	40518000	71.70	4011097584881	450
HG	40518820	107.60	4011097585307	450
HG	40522000	128.60	4011097584850	451
HG	40522820	192.90	4011097585321	451
HG	40523000	71.70	4011097584874	451
HG	40523820	107.60	4011097585253	451

brand	code no.	Euro	EAN	page
HG	40526000	57.20	4011097585260	451
HG	40526820	85.90	4011097585277	451
HG	40952800	11.80	4059625027134	555
HG	40953670	30.00	4059625325148	555
HG	40953800	17.10	4059625027141	555
HG	40960000	124.50	4059625175194	557
HG	40961000	93.40	4059625175200	557
HG	40962800	81.00	4059625189276	557
HG	40963000	20.30	4059625189269	557
HG	40964000	14.20	4059625189252	558
HG	40965000	23.30	4059625189245	558
HG	40966000	116.60	4059625189238	558
41				
HG	41501000	18.20	4011097618425	288
HG	41502000	100.10	4011097618418	288
HG	41503000	137.20	4011097618289	287
HG	41504000	101.60	4011097618272	288
HG	41505000	164.00	4011097618432	289
HG	41506000	137.20	4011097618401	288
HG	41508000	128.10	4011097618258	289
HG	41512000	119.30	4011097618265	288
HG	41513000	119.30	4011097618296	288
HG	41518000	100.10	4011097618241	289
HG	41710000	25.90	4059625123140	453
HG	41711000	7.80	4059625123089	454
HG	41712000	51.90	4059625123010	454
HG	41713000	41.50	4059625123102	453
HG	41714000	36.30	4059625123133	453
HG	41715000	25.90	4059625123058	453
HG	41716000	41.50	4059625123003	453
HG	41717000	25.90	4059625123126	455
HG	41718000	25.90	4059625123041	453
HG	41720000	72.60	4059625123027	454
HG	41722000	36.30	4059625123034	455
HG	41723000	36.30	4059625123119	454
HG	41724000	25.90	4059625123065	454
HG	41725000	15.60	4059625123096	454
HG	41726000	25.90	4059625123072	455
HG	41727000	114.10	4059625131374	456
HG	41728000	186.70	4059625131381	456
43				
HG	43201000	1,053.70	4059625006887	540
HG	43201800	1,211.80	4059625025413	540
HG	43202000	1,138.00	4059625007006	543
HG	43202800	1,296.10	4059625025505	543
HG	43203000	1,580.50	4059625007020	545
HG	43203800	1,738.70	4059625025499	545
HG	43205000	1,331.20	4059625006894	541
HG	43205800	1,484.80	4059625025482	541
HG	43206000	1,475.20	4059625007013	544
HG	43206800	1,633.30	4059625025475	544
HG	43217000	788.50	4059625100509	546
HG	43218000	860.20	4059625100493	549
HG	43219000	942.10	4059625100486	547
HG	43220000	880.60	4059625100479	550
HG	43221000	942.10	4059625100462	551
HG	43228000	942.10	4059625173589	548
HG	43230000	1,331.20	4059625177839	542
HG	43230800	1,484.80	4059625177846	542
HG	43301800	611.10	4059625007082	476
HG	43302800	663.90	4059625007129	479
HG	43303800	1,138.00	4059625007167	481
HG	43305800	611.10	4059625007099	476
HG	43306800	870.40	4059625007105	477

brand	code no.	Euro	EAN	page
HG	43307800	870.40	4059625007112	477
HG	43308800	663.90	4059625007136	479
HG	43309800	1,032.60	4059625007143	480
HG	43310800	1,032.60	4059625007150	480
HG	43311800	1,138.00	4059625007174	481
HG	43312170	288.80	4059625104781	490
HG	43312290	288.80	4059625104774	490
HG	43312380	288.80	4059625104767	490
HG	43313170	368.60	4059625104750	491
HG	43313290	368.60	4059625104743	491
HG	43313380	368.60	4059625104736	491
HG	43314170	448.50	4059625104729	490
HG	43314290	448.50	4059625104712	490
HG	43314380	448.50	4059625104705	490
HG	43315170	368.60	4059625104699	492
HG	43315290	368.60	4059625104682	492
HG	43315380	368.60	4059625104941	492
HG	43316170	430.10	4059625104934	492
HG	43316290	430.10	4059625104927	492
HG	43316380	430.10	4059625104910	492
HG	43330170	448.50	4059625173572	491
HG	43330290	448.50	4059625173565	491
HG	43330380	448.50	4059625173558	491
HG	43331800	870.40	4059625177792	478
HG	43332800	870.40	4059625177808	478
HG	43333000	21.40	4059625024003	555
HG	43334800	240.00	4059625217511	487
HG	43335800	250.00	4059625217504	487
HG	43336800	260.00	4059625217498	487
HG	43337800	340.00	4059625217481	485
HG	43338800	360.00	4059625217474	486
HG	43339800	410.00	4059625217467	486
HG	43340800	320.00	4059625217450	485
HG	43341800	340.00	4059625217443	485
HG	43342800	390.00	4059625217436	486
HG	43425800	421.50	4059625007181	482
HG	43426800	453.10	4059625007198	482
HG	43427800	474.20	4059625007204	483
HG	43428800	495.20	4059625007211	483
HG	43429800	832.40	4059625007228	484
HG	43430800	906.10	4059625007235	484
HG	43431170	355.30	4059625104903	493
HG	43431290	355.30	4059625104897	493
HG	43431380	355.30	4059625104880	493
HG	43432170	435.20	4059625104873	493
HG	43432290	435.20	4059625104866	493
HG	43432380	435.20	4059625104859	493
HG	43433170	435.20	4059625104842	494
HG	43433290	435.20	4059625104835	494
HG	43433380	435.20	4059625104828	494
HG	43434170	496.60	4059625104811	494
HG	43434290	496.60	4059625104804	494
HG	43434380	496.60	4059625104798	494
HG	43921800	25.00	4059625248737	552
HG	43922800	41.70	4059625248720	552
HG	43927000	24.90	4059625105009	553
HG	43928000	41.50	4059625104996	553
HG	43931800	43.80	4059625248713	552
HG	43932800	67.80	4059625248706	552
HG	43937000	43.60	4059625104989	554
HG	43938000	67.50	4059625104972	554
HG	43941800	30.20	4059625248690	553
HG	43942800	47.90	4059625248683	553
HG	43947000	30.10	4059625104965	554
HG	43948000	47.70	4059625104958	554
50				
HG	50001000	36.00	4011097146867	469
HG	50100000	56.10	4011097369495	468
HG	50100140	84.20	4011097820125	468
HG	50100340	84.20	4011097820101	468
HG	50100670	78.50	4059625266113	468
HG	50100700	78.50	4059625266120	468
HG	50100990	84.20	4011097820286	468
HG	50105000	23.90	4011097716282	468
HG	50107000	55.30	4011097664323	466
52				
HG	52010000	33.00	4011097123349	470
HG	52053000	23.50	4011097123431	470
HG	52100000	130.80	4011097346199	469
HG	52105000	73.40	4011097440804	469
HG	52105140	110.10	4059625001400	469
HG	52105340	110.10	4059625001370	469
HG	52105670	102.80	4059625240182	469
HG	52105700	102.80	4059625240199	469
HG	52105990	110.10	4059625001707	469
HG	52120000	187.30	4011097369563	469
53				
HG	53002000	18.20	4011097123912	471
HG	53010000	23.80	4011097123936	471
HG	53428000	12.40	4011097124070	472
HG	53493000	22.10	4011097124193	471
HG	53493670	30.90	4059625315149	471
HG	53493700	30.90	4059625315132	471
HG	53555000	22.60	4011097124308	471
HG	53646000	48.10	4011097124384	472
HG	53971000	2.30	4011097124872	578
HG	53985000	2.30	4011097124988	578
HG	53990000	21.10	4011097125008	472
55				
HG	55213000	30.70	4011097125121	471
HG	55237000	24.20	4011097125138	471
56				
HG	56373000	12.40	4011097125282	468
58				
HG	58112000	83.30	4011097651804	461
HG	58113000	237.80	4011097423913	463
HG	58115180	108.10	4011097433103	462
HG	58116180	151.60	4011097433110	463
HG	58117000	156.90	4011097417479	460
HG	58117140	235.40	4059625003732	460
HG	58117340	235.40	4059625002599	460
HG	58117670	219.70	4059625235683	460
HG	58117700	219.70	4059625235676	460
HG	58117820	235.40	4011097516615	460
HG	58117990	235.40	4059625004050	460
HG	58123000	264.20	4011097363363	462
HG	58125180	117.70	4011097140223	461
HG	58126180	165.00	4011097140230	461
HG	58127000	170.80	4011097140247	460
HG	58128000	202.60	4011097140353	460
HG	58140180	47.10	4011097233543	466
HG	58141180	72.70	4011097233574	467
HG	58142000	67.00	4011097233598	466
HG	58143000	67.00	4011097232874	467
HG	58150000	79.00	4011097492650	467
HG	58185000	21.20	4011097233581	465
HG	58185140	31.80	4059625243985	465
HG	58185340	31.80	4059625243992	465

brand	code no.	Euro	EAN	page
HG	58185670	29.70	4059625244203	465
HG	58185700	29.70	4059625244210	465
HG	58185990	31.80	4059625178706	465
HG	58186000	32.50	4011097440347	466
HG	58186820	48.80	4011097533346	466
HG	58192000	104.50	4011097412955	463
60				
HG	60056000	55.70	4011097609751	468
HG	60060000	31.30	4011097245270	468
HG	60067000	68.10	4011097557694	467
71				
HG	71020000	92.20	4059625009048	399
HG	71021000	85.00	4059625009031	399
HG	71022000	92.20	4059625009024	399
HG	71024000	92.20	4059625009017	439
HG	71030000	112.60	4059625008997	400
HG	71031000	105.50	4059625008980	400
HG	71032000	112.60	4059625008973	400
HG	71034000	112.60	4059625008966	440
HG	71036000	180.20	4059625034200	400
HG	71040000	123.90	4059625008577	404
HG	71041000	130.10	4059625008942	404
HG	71042000	123.90	4059625008935	404
HG	71043000	235.50	4059625034194	406
HG	71044000	276.50	4059625034187	406
HG	71045000	117.80	4059625034170	404
HG	71046000	183.30	4059625034163	404
HG	71047000	44.00	4059625034156	405
HG	71050000	76.80	4059625008614	401
HG	71060000	97.30	4059625008591	407
HG	71061000	107.50	4059625008928	407
HG	71062000	97.30	4059625008911	407
HG	71063000	35.80	4059625194171	408
HG	71065000	107.50	4059625034149	408
HG	71066000	107.50	4059625034132	408
HG	71067000	35.80	4059625034125	409
HG	71068000	122.90	4059625034118	409
HG	71070000	76.60	4011097738710	413
HG	71071000	71.10	4011097738703	413
HG	71072000	76.60	4011097738697	413
HG	71073000	71.10	4011097738680	413
HG	71074000	147.70	4011097738673	414
HG	71075000	76.60	4011097738666	414
HG	71076000	71.10	4011097738659	414
HG	71077000	76.60	4011097738642	413
HG	71078000	76.60	4011097753812	440
HG	71090000	125.80	4011097738628	415
HG	71091000	120.30	4011097738611	415
HG	71095000	125.80	4011097738604	416
HG	71100000	98.50	4011097738581	414
HG	71101000	93.00	4011097738574	414
HG	71102000	98.50	4011097738567	415
HG	71103000	93.00	4011097738550	415
HG	71104000	98.50	4011097753829	440
HG	71105000	98.50	4011097738543	415
HG	71107000	98.50	4011097738529	414
HG	71120000	65.60	4011097738499	417
HG	71123000	143.40	4059625008843	400
HG	71124000	137.20	4059625008836	400
HG	71126000	174.10	4059625008072	401
HG	71127000	153.60	4059625034101	402
HG	71128000	167.90	4059625034095	401
HG	71130000	158.60	4011097738482	416
HG	71131000	153.20	4011097738475	416

brand	code no.	Euro	EAN	page
HG	71133000	196.90	4011097738468	418
HG	71140000	209.90	4059625008812	402
HG	71142000	102.40	4059625008553	403
HG	71144000	138.20	4059625034088	403
HG	71145000	138.20	4059625034071	403
HG	71170000	87.20	4011097783475	413
HG	71171000	109.10	4011097783482	414
HG	71200000	103.90	4011097738444	418
HG	71203000	89.50	4059625076873	418
HG	71204000	82.00	4011097753836	418
HG	71220000	147.70	4011097738420	417
HG	71221000	93.00	4011097738413	417
HG	71222000	98.50	4011097738406	417
HG	71225000	109.40	4011097769981	416
HG	71243000	125.80	4011097768243	420
HG	71263000	103.90	4011097768250	424
HG	71280000	121.90	4011097741451	533
HG	71283000	155.20	4059625215531	534
HG	71284000	182.90	4059625215555	535
HG	71285000	155.20	4011097738369	534
HG	71286000	182.90	4011097754024	535
HG	71287000	182.90	4011097754017	535
HG	71290000	120.40	4011097738352	419
HG	71310000	437.60	4011097738338	422
HG	71311000	107.10	4011097738321	421
HG	71312000	117.00	4011097738314	422
HG	71313000	304.70	4011097738307	423
HG	71314000	304.70	4011097738291	423
HG	71315000	117.00	4011097738284	422
HG	71320000	90.80	4059625034064	405
HG	71321000	122.90	4059625008737	405
HG	71322000	112.60	4059625008720	406
HG	71324000	122.90	4059625008713	405
HG	71333000	317.40	4059625008706	407
HG	71400000	109.40	4011097738260	419
HG	71401000	109.40	4011097738253	419
HG	71402000	149.60	4011097789507	420
HG	71405000	114.90	4011097738246	420
HG	71406000	40.90	4011097738239	421
HG	71407000	180.50	4011097769967	420
HG	71409000	154.50	4059625062463	421
HG	71410000	86.10	4011097738222	358
HG	71430000	114.90	4011097738215	419
HG	71474000	253.30	4011097778563	357
HG	71474140	380.00	4059625231982	357
HG	71474340	380.00	4059625229583	357
HG	71474670	354.60	4059625231999	357
HG	71474700	354.60	4059625232002	357
HG	71474990	380.00	4059625232019	357
HG	71600000	87.50	4011097737799	424
HG	71601000	87.50	4011097737782	424
HG	71604000	32.80	4059625194157	425
HG	71605000	98.50	4011097737775	424
HG	71606000	32.80	4011097737768	425
HG	71607000	98.50	4011097754581	424
HG	71629000	115.70	4011097787749	419
HG	71630000	93.00	4011097737751	424
HG	71666000	122.60	4011097769936	425
HG	71700000	108.90	4011097770703	352
HG	71701000	108.90	4011097770697	352
HG	71702000	102.10	4011097770680	352
HG	71703000	108.90	4011097770673	353
HG	71704000	102.10	4011097770666	353
HG	71705000	108.90	4011097770659	438

Code Numbers and Trade Prices

brand	code no.	Euro	EAN	page
HG	71706000	96.20	4011097770642	355
HG	71707000	210.80	4011097770772	352
HG	71710000	132.90	4011097770765	353
HG	71710140	199.40	4059625232026	353
HG	71710340	199.40	4059625229521	353
HG	71710670	186.10	4059625232033	353
HG	71710700	186.10	4059625232040	353
HG	71710990	199.40	4059625232057	353
HG	71711000	132.90	4011097770758	353
HG	71712000	126.00	4011097770741	353
HG	71712140	189.00	4059625265789	353
HG	71712340	189.00	4059625147054	353
HG	71712670	176.40	4059625265765	353
HG	71712700	176.40	4059625265772	353
HG	71712990	189.00	4059625035573	353
HG	71713000	132.90	4011097770734	354
HG	71713140	199.40	4059625232064	354
HG	71713340	199.40	4059625232071	354
HG	71713670	186.10	4059625232088	354
HG	71713700	186.10	4059625232095	354
HG	71713990	199.40	4059625232101	354
HG	71714000	126.00	4011097770727	354
HG	71714140	189.00	4059625265833	354
HG	71714340	189.00	4059625265819	354
HG	71714670	176.40	4059625265796	354
HG	71714700	176.40	4059625265802	354
HG	71714990	189.00	4059625265826	354
HG	71715000	132.90	4011097778495	437
HG	71716000	222.30	4011097770710	355
HG	71716140	333.50	4059625232118	355
HG	71716340	333.50	4059625229538	355
HG	71716670	311.20	4059625232125	355
HG	71716700	311.20	4059625232132	355
HG	71716990	333.50	4059625232149	355
HG	71717000	216.60	4011097770826	355
HG	71717140	324.90	4059625265871	355
HG	71717340	324.90	4059625198001	355
HG	71717670	303.20	4059625265840	355
HG	71717700	303.20	4059625265857	355
HG	71717990	324.90	4059625265864	355
HG	71720000	132.90	4011097770819	356
HG	71720140	199.40	4059625250457	356
HG	71720340	199.40	4059625250440	356
HG	71720670	186.10	4059625250433	356
HG	71720700	186.10	4059625250426	356
HG	71720990	199.40	4059625250419	356
HG	71721000	132.90	4011097770802	356
HG	71729000	198.20	4011097770796	357
HG	71730000	505.20	4011097782409	359
HG	71731000	360.90	4011097782393	359
HG	71732000	186.70	4011097770789	355
HG	71733000	240.60	4011097770871	356
HG	71733140	360.90	4059625232156	356
HG	71733340	360.90	4059625229545	356
HG	71733670	336.80	4059625232163	356
HG	71733700	336.80	4059625232170	356
HG	71733990	360.90	4059625170472	356
HG	71734000	210.80	4011097778457	355
HG	71734140	316.20	4059625232187	355
HG	71734340	316.20	4059625232194	355
HG	71734670	295.10	4059625232200	355
HG	71734700	295.10	4059625232217	355
HG	71734990	316.20	4059625232224	355
HG	71740000	174.10	4011097770864	357

brand	code no.	Euro	EAN	page
HG	71740140	261.20	4059625232231	357
HG	71740340	261.20	4059625221754	357
HG	71740670	243.70	4059625232248	357
HG	71740700	243.70	4059625232255	357
HG	71740990	261.20	4059625232262	357
HG	71745000	144.30	4011097770840	357
HG	71745140	216.50	4059625232279	357
HG	71745340	216.50	4059625232286	357
HG	71745670	202.00	4059625232293	357
HG	71745700	202.00	4059625232309	357
HG	71745990	216.50	4059625232316	357
HG	71746000	66.40	4011097770833	358
HG	71747000	229.10	4011097791395	358
HG	71748000	360.90	4011097788807	360
HG	71748140	541.40	4059625232323	360
HG	71748340	541.40	4059625232330	360
HG	71748670	505.30	4059625232347	360
HG	71748700	505.30	4059625232354	360
HG	71748990	541.40	4059625232361	360
HG	71750000	181.00	4011097782379	352
HG	71751000	174.10	4011097775791	352
HG	71752000	264.60	4011097782416	352
HG	71753000	258.80	4011097775784	352
HG	71754000	205.20	4011097782355	354
HG	71754140	307.80	4059625246429	354
HG	71754340	307.80	4059625246412	354
HG	71754670	287.30	4059625246443	354
HG	71754700	287.30	4059625246450	354
HG	71754990	307.80	4059625246436	354
HG	71755000	198.20	4011097782348	354
HG	71760000	150.10	4011097770918	360
HG	71760140	225.20	4059625232378	360
HG	71760340	225.20	4059625232385	360
HG	71760670	210.10	4059625232392	360
HG	71760700	210.10	4059625232408	360
HG	71760990	225.20	4059625232415	360
HG	71761000	168.50	4011097770901	360
HG	71764000	48.10	4059625194119	361
HG	71765000	120.30	4011097778327	361
HG	71765140	180.50	4059625232422	361
HG	71765340	180.50	4059625147061	361
HG	71765670	168.40	4059625232439	361
HG	71765700	168.40	4059625232446	361
HG	71765990	180.50	4059625232453	361
HG	71766000	48.10	4011097770895	361
HG	71768000	120.30	4011097778310	361
HG	71800000	269.70	4059625085127	528
HG	71800800	350.60	4059625085110	528
HG	71801000	238.60	4059625085103	529
HG	71801800	310.20	4059625085097	529
HG	71802000	171.20	4059625085080	530
HG	71802800	222.60	4059625085073	530
HG	71803000	269.70	4059625085066	530
HG	71804000	134.80	4059625085059	530
HG	71805000	124.50	4059625085042	530
HG	71806000	124.50	4059625085035	530
HG	71806800	161.80	4059625085028	530
HG	71807000	155.60	4059625085011	531
HG	71808000	103.70	4059625085004	532
HG	71808800	134.80	4059625084991	532
HG	71809000	103.70	4059625084984	532
HG	71813000	254.20	4059625084939	531
HG	71814000	171.20	4059625098356	531
HG	71814800	222.60	4059625098363	531

brand	code no.	Euro	EAN	page
HG	71820000	323.70	4059625098370	529
HG	71820800	404.60	4059625098387	529
HG	71821000	292.60	4059625098394	529
HG	71821800	364.10	4059625098400	529
HG	71829000	225.10	4059625098417	532
HG	71829800	276.50	4059625098424	532
HG	71830000	94.70	4011097761268	534
HG	71831000	113.20	4011097766461	534
HG	71832000	107.70	4011097766454	533
HG	71833000	138.00	4011097775487	533
HG	71834000	247.70	4011097766447	533
HG	71835000	139.00	4011097766430	532
HG	71836000	139.00	4011097766423	534
HG	71837000	94.70	4011097766416	534
HG	71839000	107.70	4011097775753	533
HG	71860000	107.70	4059625197103	533
HG	71861000	139.00	4059625196755	532
HG	71862000	238.60	4059625198490	529
HG	71864000	124.50	4059625198513	530
HG	71865000	171.20	4059625198520	531
HG	71866000	103.70	4059625198537	532
HG	71920000	101.40	4059625008676	399
HG	71921000	123.90	4059625008669	443
HG	71923000	141.30	4059625008652	401
HG	71926000	107.50	4059625008645	408
HG	71970000	27.40	4011097737737	261
72				
HG	72010000	132.90	4011097770048	364
HG	72011000	132.90	4011097770116	364
HG	72012000	126.00	4011097770109	364
HG	72013000	132.90	4011097770093	364
HG	72014000	126.00	4011097770086	364
HG	72015000	132.90	4011097770079	438
HG	72017000	120.30	4011097770055	367
HG	72018000	126.00	4011097775715	364
HG	72020000	157.00	4011097770161	365
HG	72021000	150.10	4011097770154	365
HG	72022000	157.00	4011097770147	365
HG	72023000	150.10	4011097770130	365
HG	72024000	157.00	4011097770123	438
HG	72025000	150.10	4011097775708	365
HG	72031000	240.60	4011097770246	366
HG	72032000	234.80	4011097770239	366
HG	72040000	181.00	4011097770222	363
HG	72041000	174.10	4011097770215	363
HG	72042000	216.60	4011097770208	363
HG	72043000	210.80	4011097770192	363
HG	72044000	288.70	4011097770185	363
HG	72045000	291.10	4011097770178	363
HG	72105000	264.60	4011097770307	366
HG	72110000	205.20	4011097770291	367
HG	72111000	229.10	4011097770284	367
HG	72113000	421.70	4011097782546	365
HG	72115000	517.90	4011097782522	366
HG	72116000	510.90	4011097782515	366
HG	72200000	157.00	4011097770260	368
HG	72202000	205.20	4011097775494	368
HG	72290000	205.20	4011097770253	368
HG	72291000	253.30	4011097781808	368
HG	72400000	198.20	4011097770383	369
HG	72401000	216.60	4011097770376	369
HG	72405000	162.70	4011097770352	370
HG	72406000	277.30	4011097770345	370
HG	72407000	72.20	4011097770338	370

brand	code no.	Euro	EAN	page
HG	72410000	102.10	4011097770420	371
HG	72412000	1,512.20	4011097782508	369
HG	72416000	541.80	4011097770314	371
HG	72417000	390.60	4011097770413	371
HG	72418000	541.80	4011097770406	372
HG	72419000	390.60	4011097770390	372
HG	72600000	157.00	4011097770475	373
HG	72601000	168.50	4011097770468	373
HG	72605000	144.30	4011097770444	373
HG	72606000	48.10	4011097770437	374
HG	72800000	300.00	4059625255452	521
HG	72800670	390.00	4059625255445	521
HG	72800800	390.00	4059625255438	521
HG	72801000	350.00	4059625255421	522
HG	72801670	455.00	4059625255414	522
HG	72801800	455.00	4059625255407	522
HG	72802000	255.00	4059625255391	522
HG	72802670	332.00	4059625255384	522
HG	72802800	332.00	4059625255377	522
HG	72803000	305.00	4059625255360	522
HG	72803670	397.00	4059625255353	522
HG	72803800	397.00	4059625255346	522
HG	72804000	205.00	4059625255339	523
HG	72804670	267.00	4059625255322	523
HG	72804800	267.00	4059625255315	523
HG	72805000	250.00	4059625277768	523
HG	72805670	325.00	4059625277775	523
HG	72805800	325.00	4059625277782	523
HG	72806000	180.00	4059625255308	523
HG	72806670	234.00	4059625255292	523
HG	72806800	234.00	4059625255285	523
HG	72807000	225.00	4059625277850	524
HG	72807670	292.50	4059625277867	524
HG	72807800	292.50	4059625277874	524
HG	72808000	205.00	4059625255278	524
HG	72808670	267.00	4059625255261	524
HG	72808800	267.00	4059625255254	524
HG	72809000	255.00	4059625255247	524
HG	72809670	332.00	4059625255230	524
HG	72809800	332.00	4059625255223	524
HG	72810000	255.30	4011097772455	517
HG	72810800	332.00	4011097772462	517
HG	72811000	298.80	4011097823638	517
HG	72812000	288.60	4011097772479	517
HG	72813000	366.70	4011097772493	515
HG	72813800	476.50	4011097772707	515
HG	72814000	224.20	4011097823621	516
HG	72814800	291.30	4011097823614	516
HG	72815000	319.50	4011097823607	516
HG	72815800	415.30	4011097823591	516
HG	72816000	255.30	4059625198155	517
HG	72817000	366.70	4059625197981	515
HG	72820000	368.80	4011097772721	515
HG	72820800	479.60	4011097772738	515
HG	72821000	446.70	4011097772752	512
HG	72821800	580.90	4011097772769	512
HG	72822000	396.60	4011097823584	514
HG	72822800	515.50	4011097823577	514
HG	72823000	447.20	4059625255667	511
HG	72823800	581.70	4059625255650	511
HG	72824000	397.20	4059625255643	513
HG	72824800	515.80	4059625255636	513
HG	72825000	368.80	4059625198186	515
HG	72826000	446.70	4059625198209	512

Code Numbers and Trade Prices

brand	code no.	Euro	EAN	page
HG	72827000	225.00	4059625277928	525
HG	72827670	292.50	4059625277935	525
HG	72827800	292.50	4059625277942	525
HG	72831000	487.10	4059625203156	518
HG	72832000	412.00	4059625203149	519
HG	72840000	175.00	4059625255216	525
HG	72840670	228.00	4059625255209	525
HG	72840800	228.00	4059625255193	525
HG	72841000	65.00	4059625293218	557
HG	72841670	84.50	4059625293225	557
HG	72841800	84.50	4059625293232	557
HG	72842000	300.00	4059625269909	521
HG	72842670	390.00	4059625269695	521
HG	72843000	205.00	4059625269688	523
HG	72843670	266.50	4059625269671	523
HG	72844000	180.00	4059625269664	523
HG	72844670	234.00	4059625269657	523
HG	72845000	205.00	4059625269640	524
HG	72845670	266.50	4059625269633	524
73				
HG	73561000	62.20	4059625131503	455
HG	73570000	127.60	4059625307113	455
HG	73800000	464.30	4059625017630	509
HG	73800800	586.00	4059625017623	509
HG	73801000	514.10	4059625017616	508
HG	73801800	650.70	4059625017609	508
HG	73802000	475.00	4059625017593	507
HG	73802800	599.90	4059625017586	507
HG	73803000	525.00	4059625017579	505
HG	73803800	664.80	4059625017562	505
HG	73804000	533.80	4059625017555	503
HG	73804800	693.90	4059625017548	503
HG	73805000	555.00	4059625017531	501
HG	73805800	721.60	4059625017524	501
HG	73806000	597.70	4059625017517	501
HG	73806800	777.10	4059625017500	501
HG	73807000	525.00	4059625198292	505
HG	73812000	426.50	4059625017494	510
HG	73812800	537.40	4059625017487	510
HG	73816000	525.80	4059625176221	504
HG	73816800	661.60	4059625176207	504
HG	73817000	477.10	4059625176184	506
HG	73817800	598.60	4059625176177	506
HG	73818000	534.30	4059625176160	502
HG	73818340	801.50	4059625229590	502
HG	73818670	748.00	4059625232514	502
HG	73818800	689.90	4059625176153	502
HG	73819000	476.10	4059625255629	502
HG	73819800	618.90	4059625255612	502
HG	73820000	482.00	4059625255605	503
HG	73820800	626.50	4059625255599	503
HG	73822000	430.00	4059625255582	505
HG	73822800	559.30	4059625255575	505
HG	73823000	464.30	4059625198254	509
HG	73824000	514.10	4059625198230	508
HG	73825000	533.80	4059625198223	503
HG	73826000	555.00	4059625198261	501
HG	73827000	597.70	4059625198247	501
HG	73828000	426.50	4059625198278	510
HG	73830000	600.00	4059625255568	500
HG	73830670	840.00	4059625255186	500
HG	73830800	780.00	4059625255551	500
HG	73831000	650.00	4059625255179	500
HG	73831670	910.00	4059625255162	500

brand	code no.	Euro	EAN	page
HG	73831800	850.00	4059625255155	500
HG	73836000	550.00	4059625269442	500
HG	73836670	770.00	4059625278093	500
HG	73836800	720.00	4059625269435	500
HG	73837000	600.00	4059625269428	500
HG	73837670	840.00	4059625278123	500
HG	73837800	780.00	4059625269411	500
HG	73850000	368.20	4059625017456	517
HG	73850800	461.10	4059625017449	517
HG	73851000	414.00	4059625017432	516
HG	73851800	520.40	4059625017425	516
HG	73852000	443.00	4059625017418	515
HG	73852800	558.30	4059625017401	515
HG	73853000	491.70	4059625017395	513
HG	73853800	621.60	4059625017388	513
HG	73860000	380.20	4059625017364	520
HG	73860800	476.70	4059625017357	520
HG	73863000	530.60	4059625017319	518
HG	73863800	672.20	4059625017302	518
HG	73864000	457.90	4059625017296	519
HG	73864800	577.70	4059625017289	519
HG	73867000	493.30	4059625176085	512
HG	73867800	619.60	4059625176078	512
HG	73868000	446.00	4059625176061	514
HG	73868800	558.10	4059625176054	514
HG	73869000	380.20	4059625198315	520
HG	73876000	414.00	4059625198339	516
HG	73878000	457.90	4059625198353	519
HG	73879000	530.60	4059625198377	518
HG	73880000	304.10	4059625017210	526
HG	73880800	378.50	4059625017203	526
HG	73895000	304.10	4059625198438	526
74				
HG	74500000	272.20	4011097813226	300
HG	74502000	277.50	4011097813202	301
HG	74506000	293.60	4011097813141	301
HG	74507000	298.80	4011097813103	301
HG	74511000	394.90	4011097813066	301
HG	74512000	405.60	4011097813028	302
HG	74514000	379.00	4011097835129	304
HG	74515000	394.90	4011097835112	304
HG	74520000	373.60	4011097812960	306
HG	74522000	379.00	4011097812939	307
HG	74525000	341.60	4011097835105	303
HG	74526000	363.00	4011097835099	303
HG	74530000	1,142.10	4011097835082	305
HG	74532000	1,675.80	4011097835075	308
HG	74540000	352.30	4011097812915	309
HG	74545000	245.60	4011097826028	309
HG	74546000	341.60	4011097826004	309
HG	74548000	288.20	4011097835068	311
HG	74550000	661.80	4011097835051	313
HG	74551000	501.60	4011097835044	314
HG	74552000	661.80	4011097835037	315
HG	74553000	501.60	4011097835020	316
HG	74560000	245.60	4011097812878	316
HG	74565000	229.40	4011097825793	317
92				
HG	92017000	32.70	4011097143477	564
HG	92018000	13.40	4011097166285	564
HG	92019000	3.80	4011097153872	565
HG	92027000	20.70	4011097138312	564
HG	92107000	13.40	4011097132921	563
HG	92109000	26.40	4011097166940	563

brand	code no.	Euro	EAN	page
HG	92109450	32.70	4011097166971	563
HG	92571450	23.50	4011097780931	247
HG	92571610	23.50	4011097781136	247
HG	92572450	23.50	4011097780948	247
HG	92572610	23.50	4011097781143	247
HG	92573450	23.50	4011097780955	246
HG	92573610	23.50	4011097781204	246
HG	92574450	23.50	4011097780979	247
HG	92574610	23.50	4011097781167	247
HG	92575450	23.50	4011097780986	247
HG	92575610	23.50	4011097781174	247
HG	92576450	23.50	4011097780993	247
HG	92576610	23.50	4011097781181	247
HG	92577450	23.50	4011097781105	247
HG	92577610	23.50	4011097781198	247
HG	92578450	23.50	4011097780962	247
HG	92578610	23.50	4011097781150	247
HG	92579450	23.50	4011097780924	246
HG	92579610	23.50	4011097781112	246
HG	92601000	118.90	4011097133249	571
HG	92605000	26.40	4011097133287	571
HG	92620000	20.70	4011097189451	577
HG	92620450	32.70	4011097133447	577
HG	92631000	183.40	4011097133546	571
HG	92730000	42.00	4011097222776	567
93				
HG	93286000	26.40	4059625136188	455
HG	93500000	12.20	4059625222478	266
HG	93571670	9.30	4059625270134	254
HG	93571700	9.30	4059625270127	254
HG	93571880	6.20	4059625141892	254
HG	93572670	9.30	4059625270110	255
HG	93572700	9.30	4059625270103	255
HG	93572880	6.20	4059625142608	255
HG	93573670	9.30	4059625270097	254
HG	93573700	9.30	4059625270080	254
HG	93573880	6.20	4059625142615	254
HG	93574670	9.30	4059625270073	255
HG	93574700	9.30	4059625270066	255
HG	93574880	6.20	4059625142622	255
HG	93575670	9.30	4059625270059	255
HG	93575700	9.30	4059625270042	255
HG	93575880	6.20	4059625142639	255
HG	93576670	9.30	4059625270035	255
HG	93576700	9.30	4059625270028	255
HG	93576880	6.20	4059625142646	255
HG	93577670	9.30	4059625270011	255
HG	93577700	9.30	4059625270004	255
HG	93577880	6.20	4059625142653	255
HG	93578670	9.30	4059625269992	255
HG	93578700	9.30	4059625269985	255
HG	93578880	6.20	4059625142660	255
HG	93579670	9.30	4059625269978	254
HG	93579700	9.30	4059625269961	254
HG	93579880	6.20	4059625142677	254
94				
AX	94004000	118.90	4011097200224	567
AX	94005000	16.50	4011097228907	569
HG	94008000	26.40	4011097326849	571
HG	94009000	26.40	4011097326894	570
HG	94033000	6.20	4011097399256	568
HG	94051000	10.20	4011097210315	564
HG	94053000	13.40	4011097204314	563
HG	94055000	13.40	4011097259536	564
HG	94063000	6.20	4011097256412	576
HG	94074000	10.20	4011097242606	577
HG	94076000	20.70	4011097262291	576
HG	94077000	26.40	4011097345024	570
HG	94078000	10.20	4011097399218	576
HG	94129000	63.20	4011097177106	579
HG	94130000	13.40	4011097232423	575
HG	94135000	8.30	4011097213071	575
HG	94139000	60.70	4011097178752	468
HG	94140000	32.70	4011097203799	578
HG	94141000	118.90	4011097183817	571
HG	94142000	20.70	4011097183800	570
HG	94148000	51.80	4011097177120	579
HG	94149000	20.70	4011097178745	571
HG	94156000	13.40	4011097184111	568
AX	94183000	26.40	4011097241098	570
AX	94184000	3.80	4011097233246	576
HG	94246000	2.30	4011097134888	566
AX	94272000	51.80	4011097135168	575
HG	94282000	91.70	4011097239040	571
HG	94850000	16.50	4011097232638	568
95				
HG	95014000	42.00	4011097404332	570
HG	95039000	3.80	4011097326832	577
HG	95048000	51.80	4011097263748	578
AX	95052000	73.70	4011097238715	568
AX	95053000	20.70	4011097362571	568
HG	95064000	13.40	4011097363813	563
HG	95065520	51.80	4011097296050	561
HG	95065530	51.80	4011097296067	561
HG	95065840	73.70	4011097296036	561
HG	95065880	51.80	4011097296043	561
HG	95239000	10.20	4011097611686	98
HG	95960000	26.40	4011097696621	183
96				
HG	96006000	2.30	4011097256955	578
HG	96016000	20.70	4011097400204	577
HG	96026000	16.50	4011097136011	580
HG	96026450	26.40	4011097136042	580
HG	96026880	20.70	4011097136073	580
HG	96027000	16.50	4011097684505	580
HG	96027800	26.40	4011097234953	580
HG	96083000	20.70	4011097136264	574
HG	96100000	3.80	4011097136547	577
HG	96153000	20.70	4011097136745	580
HG	96170000	51.80	4011097136844	561
HG	96177450	13.40	4011097158228	563
HG	96177880	13.40	4011097158242	563
HG	96179000	8.30	4011097176468	565
HG	96184000	7.60	4011097150512	117
HG	96186000	8.10	4011097161754	564
HG	96188000	3.80	4011097176475	563
HG	96189000	3.80	4011097176482	563
HG	96190000	51.80	4011097176499	561
HG	96190330	63.20	4011097218915	561
HG	96190430	63.20	4011097178141	561
HG	96190450	63.20	4011097178172	561
HG	96190460	63.20	4011097178158	561
HG	96190480	63.20	4011097178165	561
HG	96190610	63.20	4011097178189	561
HG	96190840	91.70	4011097178202	561
HG	96190880	63.20	4011097363707	561
HG	96191000	16.50	4011097176505	564
HG	96192000	6.20	4011097249759	562

Code Numbers and Trade Prices

brand	code no.	Euro	EAN	page
HG	96193000	3.80	4011097461069	563
HG	96194000	6.20	4011097326207	563
HG	96195000	91.70	4011097284743	561
HG	96195840	183.40	4011097284750	561
HG	96200000	42.00	4011097137100	579
HG	96272000	16.50	4011097414799	563
HG	96324000	16.50	4011097399966	577
HG	96339000	51.80	4011097363295	567
HG	96370000	45.40	4011097345000	262
HG	96387000	52.00	4011097361093	575
HG	96392000	20.70	4011097405704	579
HG	96396000	28.20	4011097367583	576
AX	96441000	118.90	4011097432717	281
AX	96467000	13.40	4011097409405	575
HG	96507000	26.40	4011097603285	576
HG	96529000	13.40	4011097391427	568
HG	96615000	33.40	4011097391502	267
HG	96618000	20.70	4011097441245	574
HG	96657000	8.30	4011097460284	577
HG	96657800	16.50	4011097497372	577
HG	96708000	6.20	4011097436104	565
AX	96770000	183.40	4011097544205	565
HG	96919000	51.80	4011097492360	575
HG	96920000	73.70	4011097477930	575
97				
HG	97116000	42.00	4011097475714	564
HG	97231000	13.40	4011097481876	574
HG	97336000	63.20	4011097478609	561
HG	97450000	8.10	4011097487304	116
AX	97462000	26.40	4011097491059	569
HG	97592000	16.50	4011097505954	571
98				
HG	98003000	2.30	4011097137568	578
HG	98058000	2.30	4011097137711	565
HG	98066000	2.30	4011097397344	578
HG	98069000	2.30	4011097137766	578
HG	98556000	20.70	4011097481883	566
AX	98610000	26.40	4011097528601	569
HG	98681000	13.40	4011097545714	564
HG	98804000	20.70	4011097568744	567
HG	98806000	3.80	4011097570822	579
HG	98993000	7.60	4011097589657	112

Hand showers



Rainfinity	page 68		Raindance Select E	page 68	
Raindance Select S	page 69		Croma Select E	page 70	
Croma Select S	page 71		PuraVida	page 72	
Croma 100	page 72		Crometta 100	page 73	
Crometta	page 74		Crometta 85	page 75	

hansgrohe hand showers

Selected hand showers at a glance

		PuraVida®	**Rainfinity®**	**Raindance® Select**	
					
		PuraVida® Hand shower 3jet	**Rainfinity®** Hand shower 130 3jet	**Raindance® Select E** Hand shower 150 3jet	**Raindance® Select E** Hand shower 120 3jet
Versions	Standard	28557, -000, -400	26864, -XXX	26550, -000- 400	26520, -000- 400
	EcoSmart 9 l/min	28567, -000, -400	26865, -000, -700	26551, -000- 400	26521, -000- 400
	Green 6–7 l/min				
Features	Size of shower head	150 mm	130 mm	150 mm	120 mm
	Spray type changeover	Select	Select	Select	Select
	Spray modes (l/min in the standard version)	RainAir 16 l/min CaresseAir 16 l/min Mix 16 l/min	PowderRain 14 l/min Intense PowderRain 14 l/min MonoRain 14 l/min	RainAir 16 l/min CaresseAir 16 l/min Mix 16 l/min	RainAir 15 l/min Rain 15 l/min Whirl 15 l/min
Uniques	Select	■	■	■	■
	AirPower	■		■	■
	PowderRain		■		
	XXL Performance	■	■	■	■
	QuickClean	■	■	■	■

						
		PuraVida® Baton hand shower 120 1jet	**Rainfinity®** Baton hand shower 100 1jet	**Raindance® Select S** Hand shower 150 3jet	**Raindance® Select S** Hand shower 120 3jet	**Raindance® Select S** Hand shower 120 3jet P
Versions	Standard	28558, -000, -400	26866, -XXX	28587, -000- 400	26530, -XXX	26014, -000
	EcoSmart 9 l/min	28568, -000, -400	26867, -000, -700	28588, -000- 400	26531, -XXX	
	Green 6–7 l/min					
Features	Size of shower head	150 mm	100 mm	150 mm	120 mm	125 mm
	Spray type changeover			Select	Select	Select
	Spray modes (l/min in the standard version)	RainAir 16 l/min	PowderRain 13,8 l/min	RainAir 16 l/min CaresseAir 16 l/min Mix 16 l/min	RainAir 15 l/min Rain 15 l/min Whirl 15 l/min	Rain 12 l/min Whirl 12 l/min PowderRain 12 l/min
Uniques	Select			■	■	■
	AirPower	■		■	■	
	PowderRain		■			■
	XXL Performance	■		■	■	■
	QuickClean	■	■	■	■	■
	Low Pressure					

■ Available

Croma® Select			**Croma® 100**	**Crometta®**		
						
Croma® Select E Hand shower Multi	**Croma® Select E** Hand shower Vario	**Croma® Select E** Hand shower 1jet	**Croma® 100** Hand shower Multi	**Crometta® 100** Hand shower Multi	**Crometta® 100** Hand shower Vario	**Crometta® 100** Hand shower 1jet
26810, -400	26812, -400	26814, -400	28536, -000	26823, -400	26824, -400	26825, -400
26811, -400	26813, -400	26815, -400	28538, -000		26827, -400	26828, -400
		26816, -400			26834, -400	
110 mm	110 mm	110 mm	100 mm	100 mm	100 mm	100 mm
Select	Select		Turn	Turn	Turn	
Massage 16 l/min IntenseRain 16 l/min SoftRain 16 l/min	Rain 15 l/min IntenseRain 15 l/min TurboRain 15 l/min	Rain 16 l/min	Rain 19 l/min Massage 19 l/min MonoRain 19 l/min	Rain 19 l/min Massage 19 l/min TurboRain 19 l/min	Rain 18 l/min Massage 18 l/min	Rain 16 l/min
■	■					
■	■	■	■	■	■	■
■	■	■	■	■	■	■

						
Croma® Select S Hand shower Multi	**Croma® Select S** Hand shower Vario	**Croma® Select S** Hand shower 1jet	**Croma® 100** Hand shower Vario		**Crometta®** Hand shower Vario	**Crometta®** Hand shower 1jet
26800, -400	26802, -400	26804, -400	28535, -000		26330, -400	26331, -400
26801, -400	26803, -400	26805, -400	28537, -000		26332, -400	26333, -400
		26806, -400			26336, -400	26334, -400
110 mm	110 mm	110 mm	100 mm		100 mm	100 mm
Select	Select		Turn		Turn	
Massage 16 l/min IntenseRain 16 l/min SoftRain 16 l/min	Rain 15 l/min IntenseRain 15 l/min TurboRain 15 l/min	Rain 16 l/min	Rain 18 l/min Massage 18 l/min		Rain 14 l/min IntenseRain 14 l/min	Rain 14 l/min
■	■					
■	■	■	■		■	■
■	■	■	■		■	■
					■	

All specified flow rates are based on an operating pressure of **0.3** MPa (3 bar).

Rainfinity



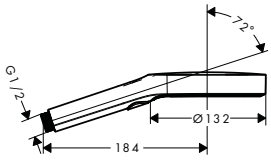

Rainfinity Hand shower 130 3jet

- shower head size: 130 mm
- spray type: PowderRain, Intense PowderRain, MonoRain
- convenient diversion via Select button
- maximum flow rate at 3 bar: 14 l/ min
- with internal water conduction
- rinseable dirt filter
- connection thread G ½
- connection dimension: DN15
- suitable for continous flow water heaters

finish	code no.	Euro
Chrome	26864000	96.20
Brushed Bronze*	26864140	144.30
Brushed Black Chrome*	26864340	144.30
Matt Black*	26864670	125.10
Matt White	26864700	125.10
Polished Gold Optic*	26864990	144.30

Select · Quick Clean · XXL Performance

*** available from January 2021**

Water saving EcoSmart version:

- **Rainfinity** Hand shower 130 3jet EcoSmart

Chrome	26865000	96.20
Brushed Bronze*	26865140	144.30
Brushed Black Chrome*	26865340	144.30
Matt Black*	26865670	125.10
Matt White	26865700	125.10
Polished Gold Optic*	26865990	144.30



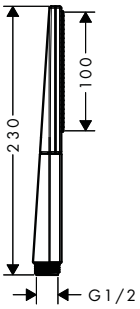

Rainfinity Baton hand shower 100 1jet

- shower head size: 100 mm
- spray type: PowderRain
- maximum flow rate at 3 bar: 13.8 l/ min
- with internal water conduction
- rinseable dirt filter
- connection thread G ½
- connection dimension: DN15
- suitable for continous flow water heaters

Chrome	26866000	81.00
Brushed Bronze*	26866140	121.50
Brushed Black Chrome*	26866340	121.50
Matt Black*	26866670	105.40
Matt White	26866700	105.40
Polished Gold Optic*	26866990	121.50

Quick Clean

*** available from January 2021**

Water saving EcoSmart version:

- **Rainfinity** Baton hand shower 100 1jet EcoSmart

Chrome	26867000	81.00
Brushed Bronze*	26867140	121.50
Brushed Black Chrome*	26867340	121.50
Matt Black*	26867670	105.40
Matt White	26867700	105.40
Polished Gold Optic*	26867990	121.50

Raindance Select E



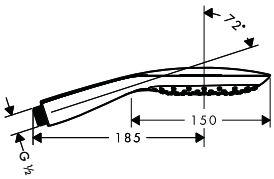

Raindance Select E Hand shower 150 3jet

- shower head size: 150 mm
- spray type: RainAir, CaresseAir, Mix
- convenient diversion via Select button
- hand shower with 2-shell construction
- maximum flow rate at 3 bar: 16 l/ min
- with internal water conduction
- rinseable dirt filter
- connection thread G ½
- connection dimension: DN15
- suitable for continous flow water heaters
- the hand shower shouldn't be combined with sliders which have two adjustable positions

Chrome	26550000	110.50
White/Chrome	26550400	110.50

Select · Air Power · Quick Clean · XXL Performance

Water saving EcoSmart version:

- **Raindance Select E** Hand shower 150 3jet EcoSmart 9 l/ min

Chrome	26551000	110.50
White/Chrome	26551400	110.50

Measurements within scale drawings are in mm.

Technical specifications and units of measure are subject to change.



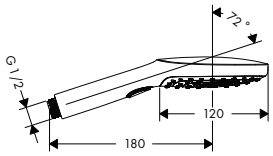

Raindance Select E Hand shower 120 3jet

- shower head size: 120 mm
- spray type: RainAir, Rain, Whirl
- convenient diversion via Select button
- maximum flow rate at 3 bar: 15 l/ min
- with internal water conduction
- rinseable dirt filter
- connection thread G ½
- connection dimension: DN15
- suitable for continous flow water heaters

finish	code no.	Euro
Chrome	26520000	86.40
Brushed Bronze	26520140	129.60
Brushed Black Chrome	26520340	129.60
White/Chrome	26520400	86.40
Matt Black	26520670	121.00
Matt White	26520700	121.00
Polished Gold Optic	26520990	129.60

Select · Air Power · Quick Clean · XXL Performance

Water saving EcoSmart version:

- **Raindance Select E** Hand shower 120 3jet EcoSmart 9 l/ min

Chrome	26521000	86.40
White/Chrome	26521400	86.40

Raindance Select S



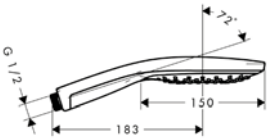

Raindance Select S Hand shower 150 3jet

- shower head size: 150 mm
- spray type: RainAir, CaresseAir, Mix
- convenient diversion via Select button
- hand shower with 2-shell construction
- maximum flow rate at 3 bar: 16 l/ min
- with internal water conduction
- rinseable dirt filter
- connection thread G ½
- connection dimension: DN15
- suitable for continous flow water heaters
- the hand shower shouldn't be combined with sliders which have two adjustable positions

Chrome	28587000	110.50
White/Chrome	28587400	110.50

Select · Air Power · Quick Clean · XXL Performance

Water saving EcoSmart version:

- **Raindance Select S** Hand shower 150 3jet EcoSmart 9 l/ min

Chrome	28588000	110.50
White/Chrome	28588400	110.50



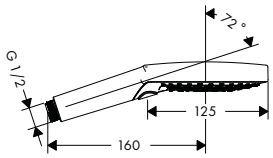

Raindance Select S Hand shower 120 3jet PowderRain

- shower head size: 125 mm
- spray type: PowderRain, Rain, Whirl
- convenient diversion via Select button
- maximum flow rate at 3 bar: 12 l/ min
- with internal water conduction
- rinseable dirt filter
- connection thread G ½
- connection dimension: DN15
- suitable for continous flow water heaters

Chrome	26014000	88.10

Select · Quick Clean · XXL Performance

Measurements within scale drawings are in mm.

Technical specifications and units of measure are subject to change.

	finish	code no.	Euro
Raindance Select S Hand shower 120 3jet			
· shower head size: 125 mm · spray type: Rain, RainAir, Whirl · convenient diversion via Select button · maximum flow rate at 3 bar: 15 l/ min · with internal water conduction · rinseable dirt filter · connection thread G ½ · connection dimension: DN15 · suitable for continous flow water heaters	Chrome	26530000	86.40
	Brushed Bronze	26530140	129.60
	Brushed Black Chrome	26530340	129.60
	White/Chrome	26530400	86.40
	Matt Black	26530670	121.00
	Matt White	26530700	121.00
	Polished Gold Optic	26530990	129.60
Water saving EcoSmart version: · **Raindance Select S** Hand shower 120 3jet EcoSmart 9 l/ min	Chrome	26531000	86.40
	Brushed Bronze	26531140	129.60
	Brushed Black Chrome	26531340	129.60
	White/Chrome	26531400	86.40
	Matt Black	26531670	121.00
	Matt White	26531700	121.00
	Polished Gold Optic	26531990	129.60

Croma Select E

Croma Select E Hand shower Multi			
· shower head size: 110 mm · spray type: SoftRain, IntenseRain, Massage spray · convenient diversion via Select button · maximum flow rate at 3 bar: 16 l/ min · with internal water conduction · rinseable dirt filter · connection thread G ½ · connection dimension: DN15 · suitable for continous flow water heaters	White/Chrome	26810400	61.60
Water saving EcoSmart version: · **Croma Select E** Hand shower Multi EcoSmart 9 l/ min	White/Chrome	26811400	61.60
Croma Select E Hand shower Vario			
· shower head size: 110 mm · spray type: Rain, IntenseRain, TurboRain · convenient diversion via Select button · maximum flow rate at 3 bar: 15 l/ min · with internal water conduction · rinseable dirt filter · connection thread G ½ · connection dimension: DN15 · suitable for continous flow water heaters	White/Chrome	26812400	47.00
Water saving EcoSmart version: · **Croma Select E** Hand shower Vario EcoSmart 9 l/ min	White/Chrome	26813400	47.00

Measurements within scale drawings are in mm.

Technical specifications and units of measure are subject to change.

	finish	code no.	Euro



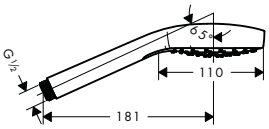

Croma Select E Hand shower 1jet

- shower head size: 110 mm
- spray type: Rain
- maximum flow rate at 3 bar: 16 l/min
- with internal water conduction
- rinseable dirt filter
- connection thread G ½
- connection dimension: DN15
- suitable for continous flow water heaters

	White/Chrome	26814400	35.30
Water saving EcoSmart version:			
Croma Select E Hand shower 1jet EcoSmart 9 l/min	White/Chrome	26815400	35.30
Croma Select E Hand shower 1jet EcoSmart 7 l/min	White/Chrome	26816400	35.30

Croma Select S



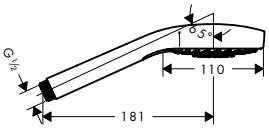

Croma Select S Hand shower Multi

- shower head size: 110 mm
- spray type: SoftRain, IntenseRain, Massage spray
- convenient diversion via Select button
- maximum flow rate at 3 bar: 16 l/min
- with internal water conduction
- rinseable dirt filter
- connection thread G ½
- connection dimension: DN15
- suitable for continous flow water heaters

	White/Chrome	26800400	61.60
Water saving EcoSmart version:			
Croma Select S Hand shower Multi EcoSmart 9 l/min	White/Chrome	26801400	61.60



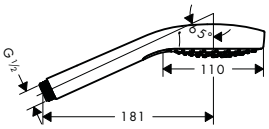

Croma Select S Hand shower Vario

- shower head size: 110 mm
- spray type: Rain, IntenseRain, TurboRain
- convenient diversion via Select button
- maximum flow rate at 3 bar: 15 l/min
- with internal water conduction
- rinseable dirt filter
- connection thread G ½
- connection dimension: DN15
- suitable for continous flow water heaters

	White/Chrome	26802400	47.00
Water saving EcoSmart version:			
Croma Select S Hand shower Vario EcoSmart 9 l/min	White/Chrome	26803400	47.00



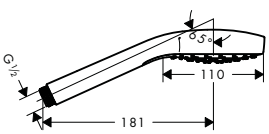

Croma Select S Hand shower 1jet

- shower head size: 110 mm
- spray type: Rain
- maximum flow rate at 3 bar: 16 l/min
- with internal water conduction
- rinseable dirt filter
- connection thread G ½
- connection dimension: DN15
- suitable for continous flow water heaters

	White/Chrome	26804400	35.30
Water saving EcoSmart version:			
Croma Select S Hand shower 1jet EcoSmart 9 l/min	White/Chrome	26805400	35.30
Croma Select S Hand shower 1jet EcoSmart 7 l/min	White/Chrome	26806400	35.30

Measurements within scale drawings are in mm.

Technical specifications and units of measure are subject to change.

PuraVida



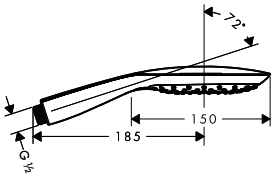

	finish	code no.	Euro
PuraVida Hand shower 150 3jet · shower head size: 150 mm · spray type: RainAir, CaresseAir, Mix · convenient diversion via Select button · hand shower with 2-shell construction · maximum flow rate at 3 bar: 16 l/ min · with internal water conduction · rinseable dirt filter · connection thread G ½ · connection dimension: DN15 · suitable for continous flow water heaters · the hand shower shouldn't be combined with sliders which have two adjustable positions	Chrome White/Chrome	28557000 28557400	165.10 165.10
Water saving EcoSmart version: · **PuraVida** Hand shower 3jet EcoSmart 9 l/ min	Chrome White/Chrome	28567000 28567400	169.60 169.60



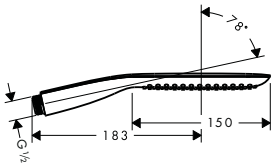

PuraVida Baton hand shower 120 1jet · shower head size: 150 mm · spray type: RainAir · hand shower with 2-shell construction · maximum flow rate at 3 bar: 16 l/ min · with internal water conduction · rinseable dirt filter · connection thread G ½ · connection dimension: DN15 · suitable for continous flow water heaters	Chrome White/Chrome	28558000 28558400	103.90 103.90
Water saving EcoSmart version: · **PuraVida** Baton hand shower 120 1jet EcoSmart 9 l/ min	Chrome White/Chrome	28568000 28568400	108.80 108.80

Raindance Classic



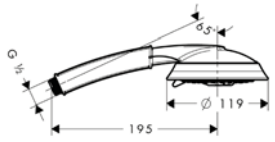

Raindance Classic Hand shower 100 3jet · shower head size: 119 mm · spray type: RainAir, Whirl, BalanceAir · spray type adjustment by turning spray disc · maximum flow rate at 3 bar: 17 l/ min · rinseable dirt filter · connection thread G ½ · connection dimension: DN15 · suitable for continous flow water heaters	Chrome Chrome/Gold Optic	28548000 28548090	146.80 183.60

Croma 100



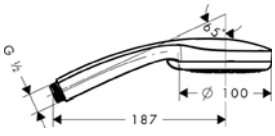

Croma 100 Hand shower Multi · shower head size: 100 mm · spray type: Rain, MonoRain, Massage spray · spray type adjustment by turning spray disc · maximum flow rate at 3 bar: 19 l/ min · with internal water conduction · rinseable dirt filter · connection thread G ½ · connection dimension: DN15 · suitable for continous flow water heaters	Chrome	28536000	63.20
Water saving EcoSmart version: · **Croma 100** Hand shower Multi EcoSmart 9 l/ min	Chrome	28538000	67.80

Measurements within scale drawings are in mm.

Technical specifications and units of measure are subject to change.

	finish	code no.	Euro
Croma 100 Hand shower Vario	Chrome	28535000	35.60



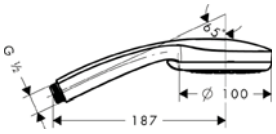

- shower head size: 100 mm
- spray type: Rain, normal spray, Shampoo spray, Massage spray
- spray type adjustment by turning spray disc
- maximum flow rate at 3 bar: 18 l/min
- with internal water conduction
- rinseable dirt filter
- connection thread G ½
- connection dimension: DN15
- suitable for continous flow water heaters

Water saving EcoSmart version:

· **Croma 100** Hand shower Vario EcoSmart 9 l/min	Chrome	28537000	40.40

Croma 100 Hand shower 1jet	Chrome	28580000	29.00



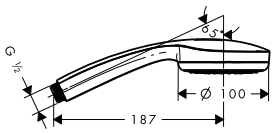

- shower head size: 100 mm
- spray type: Rain
- maximum flow rate at 3 bar: 16 l/min
- with internal water conduction
- rinseable dirt filter
- connection thread G ½
- connection dimension: DN15
- suitable for continous flow water heaters

Water saving EcoSmart version:

· **Croma 100** Hand shower Mono EcoSmart 9 l/min	Chrome	28583000	33.90

Croma 100 Classic

Croma 100 Classic Hand shower Multi	Chrome	28539000	77.10



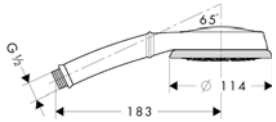

- shower head size: 114 mm
- spray type: Rain, MonoRain, Massage spray
- spray type adjustment by turning spray disc
- maximum flow rate at 3 bar: 19 l/min
- with internal water conduction
- rinseable dirt filter
- connection thread G ½
- connection dimension: DN15
- suitable for continous flow water heaters

Crometta 100

Crometta 100 Hand shower Multi	White/Chrome	26823400	34.60



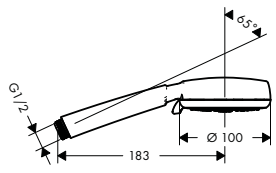

- shower head size: 100 mm
- spray type: Rain, TurboRain, Massage spray
- spray type adjustment by turning spray disc
- maximum flow rate at 3 bar: 19 l/min
- with internal water conduction
- rinseable dirt filter
- connection thread G ½
- connection dimension: DN15
- suitable for continous flow water heaters

Measurements within scale drawings are in mm.

Technical specifications and units of measure are subject to change.

	finish	code no.	Euro



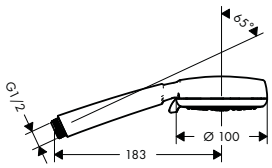

Crometta 100 Hand shower Vario — White/Chrome — 26824400 — 26.50

- shower head size: 100 mm
- spray type: Rain, normal spray, Shampoo spray, Massage spray
- spray type adjustment by turning spray disc
- maximum flow rate at 3 bar: 18 l/ min
- with internal water conduction
- rinseable dirt filter
- connection thread G ½
- connection dimension: DN15
- suitable for continous flow water heaters

Water saving EcoSmart version:

- **Crometta 100** Hand shower Vario EcoSmart 9 l/ min — White/Chrome — 26827400 — 26.50
- **Crometta 100** Hand shower Vario EcoSmart 6 l/ min — White/Chrome — 26834400 — 25.80



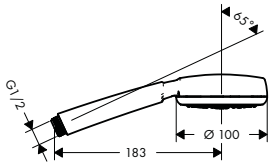

Crometta 100 Hand shower 1jet — White/Chrome — 26825400 — 20.50

- shower head size: 100 mm
- spray type: Rain
- maximum flow rate at 3 bar: 16 l/ min
- with internal water conduction
- rinseable dirt filter
- connection thread G ½
- connection dimension: DN15
- suitable for continous flow water heaters

Water saving EcoSmart version:

- **Crometta 100** Hand shower 1jet EcoSmart 9 l/ min — White/Chrome — 26828400 — 20.50

Crometta



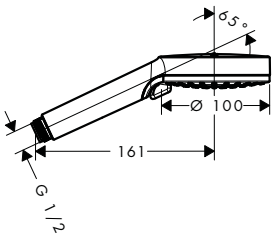

Crometta Hand shower Vario — White/Chrome — 26330400 — 19.80

- shower head size: 100 mm
- spray type: Rain, IntenseRain
- spray type adjustment by turning spray disc
- maximum flow rate at 3 bar: 14 l/ min
- with internal water conduction
- rinseable dirt filter
- connection thread G ½
- connection dimension: DN15
- suitable for continous flow water heaters

Water saving EcoSmart version:

- **Crometta** Hand shower Vario EcoSmart 9 l/ min — White/Chrome — 26332400 — 21.90
- **Crometta** Hand shower Vario Green 6 l/ min — White/Chrome — 26336400 — 21.90

Measurements within scale drawings are in mm.

Technical specifications and units of measure are subject to change.

	finish	code no.	Euro



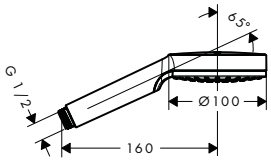

Crometta Hand shower 1jet — White/Chrome — 26331400 — 17.50

- shower head size: 100 mm
- spray type: Rain
- maximum flow rate at 3 bar: 14 l/min
- with internal water conduction
- rinseable dirt filter
- connection thread G ½
- connection dimension: DN15
- suitable for continous flow water heaters

Water saving EcoSmart version:

- **Crometta** Hand shower 1jet EcoSmart 9 l/min — White/Chrome — 26333400 — 19.80
- **Crometta** Hand shower 1jet Green 6 l/min — White/Chrome — 26334400 — 19.80

Crometta 85



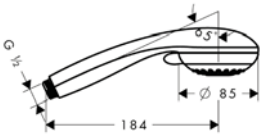

Crometta 85 Hand shower Multi — Chrome — 28563000 — 37.60

- shower head size: 85 mm
- spray type: normal spray, Massage spray, MonoRain
- spray type adjustment by turning spray disc
- maximum flow rate at 3 bar: 16 l/min
- with internal water conduction
- rinseable dirt filter
- connection thread G ½
- connection dimension: DN15
- suitable for continous flow water heaters



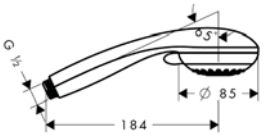

Crometta 85 Hand shower Vario — Chrome — 28562000 — 21.40

- shower head size: 85 mm
- spray type: normal spray, Vario spray
- spray type adjustment by turning spray disc
- maximum flow rate at 3 bar: 17 l/min
- rinseable dirt filter
- connection thread G ½
- connection dimension: DN15
- suitable for continous flow water heaters



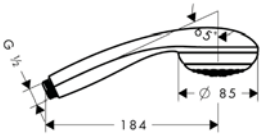

Crometta 85 Hand shower Mono — Chrome — 28585000 — 17.50

- shower head size: 85 mm
- spray type: normal spray
- maximum flow rate at 3 bar: 16 l/min
- with internal water conduction
- rinseable dirt filter
- connection thread G ½
- connection dimension: DN15
- suitable for continous flow water heaters

Water saving EcoSmart version:

- **Crometta 85** Hand shower Mono Green 6 l/min — Chrome — 28561000 — 27.70

Measurements within scale drawings are in mm.

Technical specifications and units of measure are subject to change.

Bidette

	finish	code no.	Euro



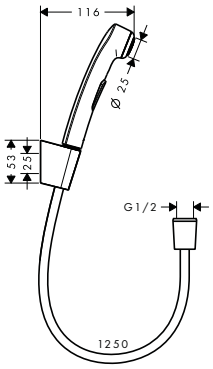

Bidette hand shower 1jet with shower holder and pressure shower hose 125 cm

Chrome — 32129000 — 80.80

- consists of: bidette hand shower, shower holder, chrome-colored shower hose
- maximum flow rate at 3 bar: 6 l/ min
- with non-return valve
- additional comment: surface shower hose chrome

Consisting of:
- Shower holder Porter S (# 28331XXX)

Alternative sizes:
- Bidette hand shower 1jet with shower holder and pressure shower hose 160 cm — Chrome — 32128000 — 82.50



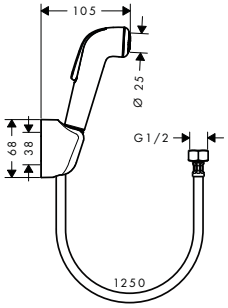

Bidette hand shower 1jet with shower holder and pressure resistant shower hose 125 cm

White/Chrome — 32127000 — 46.00

- consists of: bidette hand shower, shower holder, chrome-colored shower hose
- maximum flow rate at 3 bar: 6 l/ min
- with non-return valve
- additional comment: surface shower hose chrome

Consisting of:
- Shower holder (# 28321000)

Alternative sizes:
- Bidette hand shower 1jet with shower holder and pressure resistant shower hose 160 cm — White/Chrome — 32122000 — 48.50

Measurements within scale drawings are in mm.

Technical specifications and units of measure are subject to change.

Shower sets / Shower bars / Shower holder



Shower sets	page 78		Shower sets with thermostatic mixer for exposed installation	page 106	
Wall bars	page 111		Shower holder sets	page 118	
Shower holder	page 125		Fixfit wall outlets	page 126	

Rainfinity shower sets

	finish	code no.	Euro

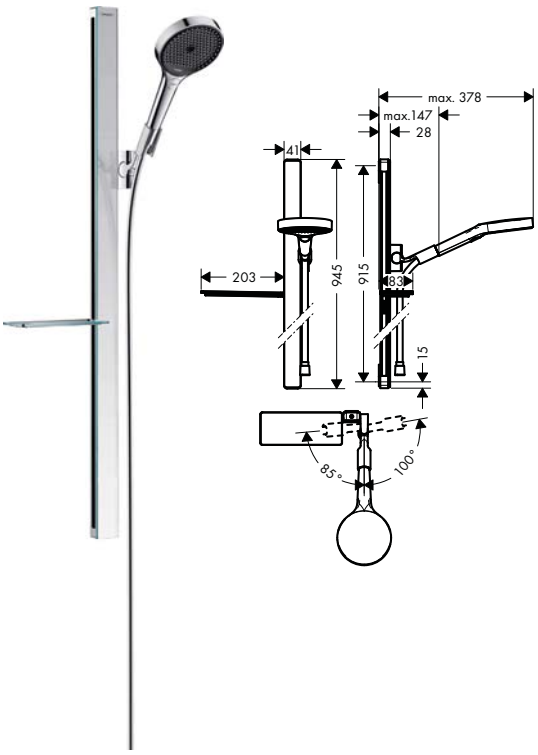

Rainfinity Shower set 130 3jet with shower bar 90 cm and soap dish

Chrome | 27671000 | 349.50

Select | Quick Clean | XXL Performance

- consists of: hand shower, shower bar, shower hose, slider, soap dish
- shower head size: 130 mm
- spray type: PowderRain, Intense PowderRain, MonoRain
- shelf made of safety glass
- convenient diversion via Select button
- pivot connector prevent hose from tangling
- 90° position adjustable slider, pivots left and right, up and down
- maximum flow rate at 3 bar: 14 l/min
- bar width: 41 mm
- wall supports of plastic
- wall bar type: flat aluminium profile with safety glass finish
- finish: chrome

Consisting of:
- **Rainfinity** Hand shower 130 3jet (# 26864XXX)
- **Isiflex** Shower hose 160 cm (# 28276XXX)
- **Casetta** Soap dish/ shelf E (# 26511XXX)

Alternative sizes:
- **Rainfinity** Shower set 130 3jet with shower bar 150 cm and soap dishes — Chrome | 27673000 | 450.80

Water saving EcoSmart version:
- **Rainfinity** Shower set 130 3jet EcoSmart with shower bar 90 cm and soap dish — Chrome | 27672000 | 349.50

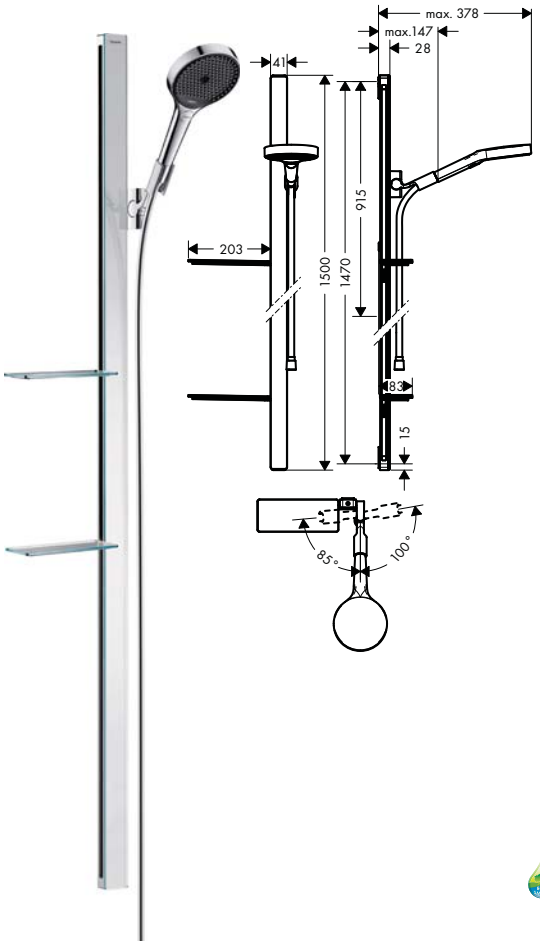

Rainfinity Shower set 130 3jet with shower bar 150 cm and soap dishes

Chrome | 27673000 | 450.80

Select | Quick Clean | XXL Performance

- consists of: hand shower, shower bar, shower hose, slider, soap dishes
- shower head size: 130 mm
- spray type: PowderRain, Intense PowderRain, MonoRain
- shelf made of safety glass
- convenient diversion via Select button
- pivot connector prevent hose from tangling
- 90° position adjustable slider, pivots left and right, up and down
- maximum flow rate at 3 bar: 14 l/min
- bar width: 41 mm
- wall supports of plastic
- wall bar type: flat aluminium profile with safety glass finish
- finish: chrome

Consisting of:
- **Rainfinity** Hand shower 130 3jet (# 26864XXX)
- **Isiflex** Shower hose 160 cm (# 28276XXX)
- **Casetta** Soap dish/ shelf E (# 26511XXX)

Alternative sizes:
- **Rainfinity** Shower set 130 3jet with shower bar 90 cm and soap dish — Chrome | 27671000 | 349.50

Water saving EcoSmart version:
- **Rainfinity** Shower set 130 3jet EcoSmart with shower bar 150 cm and soap dishes — Chrome | 27674000 | 450.80

Measurements within scale drawings are in mm.

Technical specifications and units of measure are subject to change.

Raindance Select E shower sets



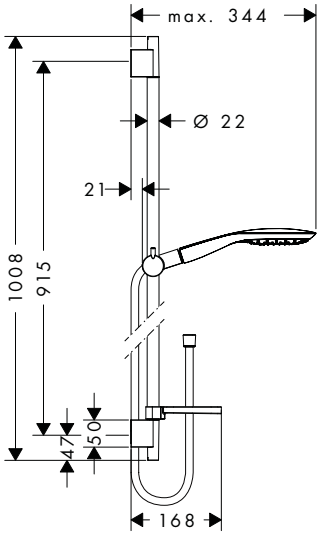

	finish	code no.	Euro
Raindance Select E Shower set 150 3jet with shower bar 90 cm and soap dish	Chrome	27857000	228.10
	White/Chrome	27857400	228.10

Select · Air Power · Quick Clean · XXL Performance

- consists of: hand shower, shower bar, shower hose, slider, soap dish
- shower head size: 150 mm
- spray type: RainAir, CaresseAir, Mix
- convenient diversion via Select button
- pivot connector prevent hose from tangling
- 90° position adjustable slider, pivots left and right, up and down
- maximum flow rate at 3 bar: 16 l/min
- wall supports of plastic

Consisting of:
- **Raindance Select E** Hand shower 150 3jet (# 26550XXX)
- **Unica** Shower bar S Puro 90 cm with shower hose (# 28631XXX)
- **Casetta** Soap dish E (# 26519000)

Alternative sizes:

Raindance Select E Shower set 150 3jet with shower bar 65 cm and soap dish	Chrome	27856000	220.80
	White/Chrome	27856400	220.80

Optional parts:

Wall bar spacer	Chrome	97450000	8.10



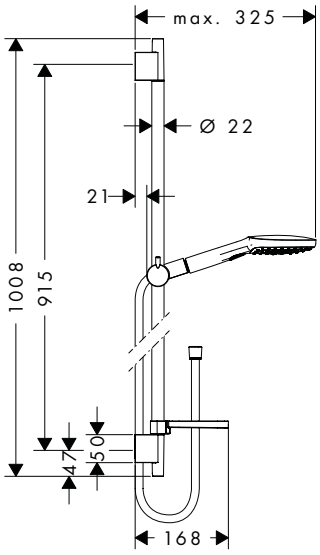

	finish	code no.	Euro
Raindance Select E Shower set 120 3jet with shower bar 90 cm and soap dish	Chrome	26621000	186.10
	White/Chrome	26621400	186.10

Select · Air Power · Quick Clean · XXL Performance

- consists of: hand shower, shower bar, shower hose, slider, soap dish
- shower head size: 120 mm
- spray type: RainAir, Rain, Whirl
- convenient diversion via Select button
- pivot connector prevent hose from tangling
- 90° position adjustable slider, pivots left and right, up and down
- maximum flow rate at 3 bar: 15 l/min
- wall supports of plastic

Consisting of:
- **Raindance Select E** Hand shower 120 3jet (# 26520XXX)
- **Unica** Shower bar S Puro 90 cm with shower hose (# 28631XXX)
- **Casetta** Soap dish E (# 26519000)

Alternative sizes:

Raindance Select E Shower set 120 3jet with shower bar 65 cm and soap dish	Chrome	26620000	180.00
	White/Chrome	26620400	180.00

Water saving EcoSmart version:

Raindance Select E Shower set 120 3jet EcoSmart 9 l/min with shower bar 90 cm and soap dish	Chrome	26623000	186.10
	White/Chrome	26623400	186.10

Optional parts:

Wall bar spacer	Chrome	97450000	8.10

Measurements within scale drawings are in mm.

Technical specifications and units of measure are subject to change.

	finish	code no.	Euro



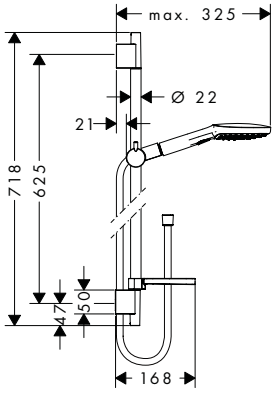

Raindance Select E Shower set 120 3jet with shower bar 65 cm and soap dish

- consists of: hand shower, shower bar, shower hose, slider, soap dish
- shower head size: 120 mm
- spray type: Rain, RainAir, Whirl
- convenient diversion via Select button
- pivot connector prevent hose from tangling
- 90° position adjustable slider, pivots left and right, up and down
- maximum flow rate at 3 bar: 15 l/min
- wall supports of plastic

	finish	code no.	Euro
	Chrome	26620000	180.00
	White/Chrome	26620400	180.00

Consisting of:
- **Raindance Select E** Hand shower 120 3jet (# 26520XXX)
- **Unica** Shower bar S Puro 65 cm with shower hose (# 28632XXX)
- **Casetta** Soap dish E (# 26519000)

Alternative sizes:

	finish	code no.	Euro
· **Raindance Select E** Shower set 120 3jet with shower bar 90 cm and soap dish	Chrome	26621000	186.10
	White/Chrome	26621400	186.10

Water saving EcoSmart version:

	finish	code no.	Euro
· **Raindance Select E** Shower set 120 3jet EcoSmart 9 l/min with shower bar 65 cm and soap dish	Chrome	26622000	180.00
	White/Chrome	26622400	180.00

Optional parts:

	finish	code no.	Euro
· Wall bar spacer	Chrome	97450000	8.10

Raindance Select S shower sets

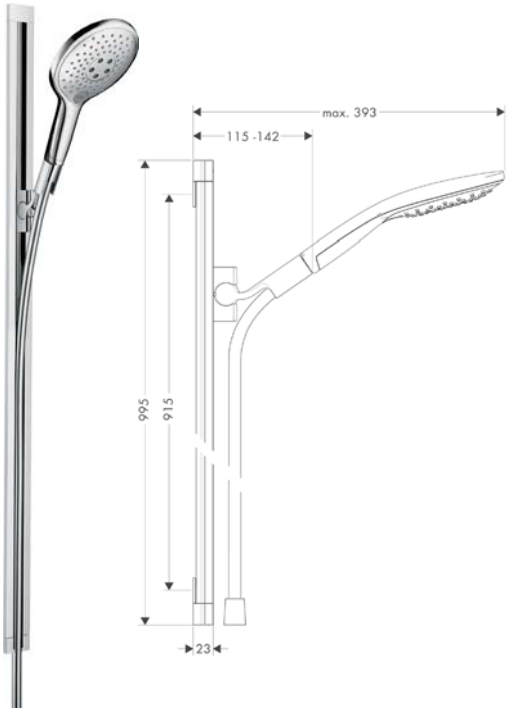

Raindance Select S Shower set 150 3jet with shower bar 90 cm

- consists of: hand shower, shower bar, shower hose, slider
- shower head size: 150 mm
- spray type: RainAir, CaresseAir, Mix
- convenient diversion via Select button
- pivot connector prevent hose from tangling
- 90° position adjustable slider, pivots left and right, up and down
- maximum flow rate at 3 bar: 16 l/min

	finish	code no.	Euro
	Chrome	26626000	334.70
	White/Chrome	26626400	334.70

Consisting of:
- **Raindance Select S** Hand shower 150 3jet (# 28587XXX)
- **Unica** Shower bar Raindance 90 cm with shower hose (# 27636000)

Optional parts:

	finish	code no.	Euro
· **Raindance** Corner fitting set		28694000	32.70
· **Raindance** Wall bar spacer	Chrome	98993000	7.60

Measurements within scale drawings are in mm.

Technical specifications and units of measure are subject to change.

	finish	code no.	Euro



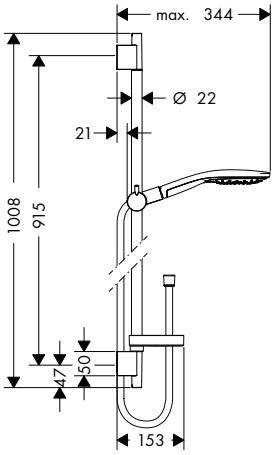

Raindance Select S Shower set 150 3jet with shower bar 90 cm and soap dish

	finish	code no.	Euro
	Chrome	27803000	226.80
	White/Chrome	27803400	226.80

Select · Air Power · Quick Clean · XXL Performance

- consists of: hand shower, shower bar, shower hose, slider, soap dish
- shower head size: 150 mm
- spray type: RainAir, CaresseAir, Mix
- convenient diversion via Select button
- pivot connector prevent hose from tangling
- 90° position adjustable slider, pivots left and right, up and down
- maximum flow rate at 3 bar: 16 l/min
- wall supports of plastic

Consisting of:
- **Raindance Select S** Hand shower 150 3jet (# 28587XXX)
- **Unica** Shower bar S Puro 90 cm with shower hose (# 28631XXX)
- **Casetta** Soap dish S Puro (# 28679000)

Alternative sizes:

· **Raindance Select S** Shower set 150 3jet with shower bar 65 cm and soap dish	Chrome	27802000	219.80
	White/Chrome	27802400	219.80

Optional parts:

· Wall bar spacer	Chrome	97450000	8.10



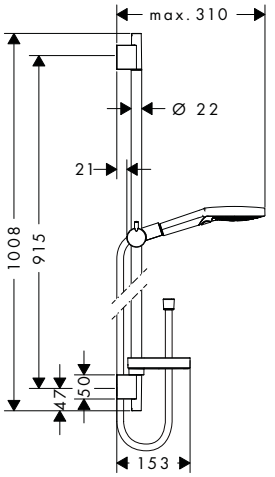

Raindance Select S Shower set 120 3jet PowderRain with shower bar 90 cm

	finish	code no.	Euro
	Chrome	27667000	189.80

Select · Quick Clean · XXL Performance

- consists of: hand shower, shower bar, shower hose, slider, soap dish
- shower head size: 125 mm
- spray type: PowderRain, Rain, Whirl
- convenient diversion via Select button
- pivot connector prevent hose from tangling
- 90° position adjustable slider, pivots left and right, up and down
- maximum flow rate at 3 bar: 12 l/min
- bar width: 22 mm
- wall supports of plastic
- wall mounting: screw fastening

Consisting of:
- **Unica** Shower bar S Puro 90 cm with shower hose (# 28631XXX)
- **Raindance Select S** Hand shower 120 3jet PowderRain (# 26014000)
- **Casetta** Soap dish S Puro (# 28679000)

Alternative sizes:

· **Raindance Select S** Shower set 120 3jet PowderRain with shower bar 65 cm	Chrome	27654000	183.70

Optional parts:

· Wall bar spacer	Chrome	97450000	8.10

Measurements within scale drawings are in mm.

Technical specifications and units of measure are subject to change.



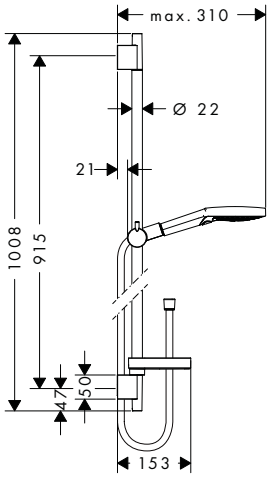

Raindance Select S Shower set 120 3jet with shower bar 90 cm and soap dish

- consists of: hand shower, shower bar, shower hose, slider, soap dish
- shower head size: 125 mm
- spray type: Rain, RainAir, Whirl
- convenient diversion via Select button
- pivot connector prevent hose from tangling
- 90° position adjustable slider, pivots left and right, up and down
- maximum flow rate at 3 bar: 15 l/min
- wall supports of plastic

Consisting of:
- **Raindance Select S** Hand shower 120 3jet (# 26530XXX)
- **Unica** Shower bar S Puro 90 cm with shower hose (# 28631XXX)
- **Casetta** Soap dish S Puro (# 28679000)

	finish	code no.	Euro
	Chrome	26631000	186.10
	White/Chrome	26631400	186.10

Alternative sizes:

Raindance Select S Shower set 120 3jet with shower bar 65 cm and soap dish	Chrome	26630000	180.00
	White/Chrome	26630400	180.00

Water saving EcoSmart version:

Raindance Select S Shower set 120 3jet EcoSmart 9 l/min with shower bar 90 cm and soap dish	Chrome	26633000	186.10
	White/Chrome	26633400	186.10

Optional parts:

Wall bar spacer	Chrome	97450000	8.10



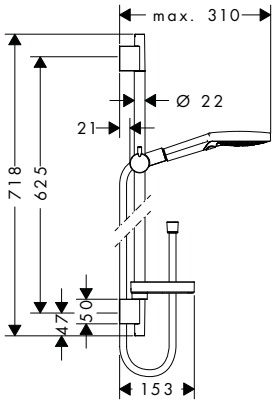

Raindance Select S Shower set 120 3jet with shower bar 65 cm and soap dish

- consists of: hand shower, shower bar, shower hose, slider, soap dish
- shower head size: 125 mm
- spray type: Rain, RainAir, Whirl
- convenient diversion via Select button
- pivot connector prevent hose from tangling
- 90° position adjustable slider, pivots left and right, up and down
- maximum flow rate at 3 bar: 15 l/min
- wall supports of plastic

Consisting of:
- **Raindance Select S** Hand shower 120 3jet (# 26530XXX)
- **Unica** Shower bar S Puro 65 cm with shower hose (# 28632XXX)
- **Casetta** Soap dish S Puro (# 28679000)

	finish	code no.	Euro
	Chrome	26630000	180.00
	White/Chrome	26630400	180.00

Alternative sizes:

Raindance Select S Shower set 120 3jet with shower bar 90 cm and soap dish	Chrome	26631000	186.10
	White/Chrome	26631400	186.10

Water saving EcoSmart version:

Raindance Select S Shower set 120 3jet EcoSmart 9 l/min with shower bar 65 cm and soap dish	Chrome	26632000	180.00
	White/Chrome	26632400	180.00

Optional parts:

Wall bar spacer	Chrome	97450000	8.10

Measurements within scale drawings are in mm.

Technical specifications and units of measure are subject to change.

Raindance E shower sets

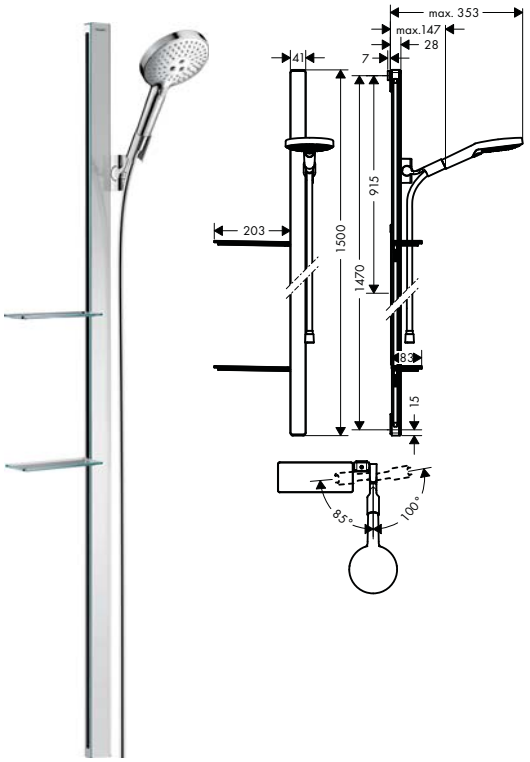

	finish	code no.	Euro
Raindance Select S Shower set 120 3jet with shower bar 150 cm and soap dishes	Chrome	27646000	459.00
	White/Chrome	27646400	459.00

Select · Air Power · Quick Clean · XXL Performance

- consists of: hand shower, shower bar, shower hose, slider, soap dishes
- shower head size: 125 mm
- spray type: Rain, RainAir, Whirl
- shelf made of safety glass
- convenient diversion via Select button
- pivot connector prevent hose from tangling
- 90° position adjustable slider, pivots left and right, up and down
- maximum flow rate at 3 bar: 15 l/ min
- bar width: 41 mm
- wall supports of plastic
- wall mounting: screw fastening
- wall bar type: flat aluminium profile with safety glass finish
- finish: chrome or white

Consisting of:
- **Raindance Select S** Hand shower 120 3jet (# 26530XXX)
- **Unica** Shower bar E 150 cm with shower hose (# 27645XXX)
- **Casetta** Soap dish/ shelf E (# 26511XXX)

Alternative sizes:

· **Raindance Select S** Shower set 120 3jet with shower bar 90 cm and soap dish	Chrome	27648000	352.30
	White/Chrome	27648400	352.30

Water saving EcoSmart version:

· **Raindance Select S** Shower set 120 3jet EcoSmart 9 l/ min with shower bar 150 cm and soap dishes	Chrome	27647000	459.00
	White/Chrome	27647400	459.00

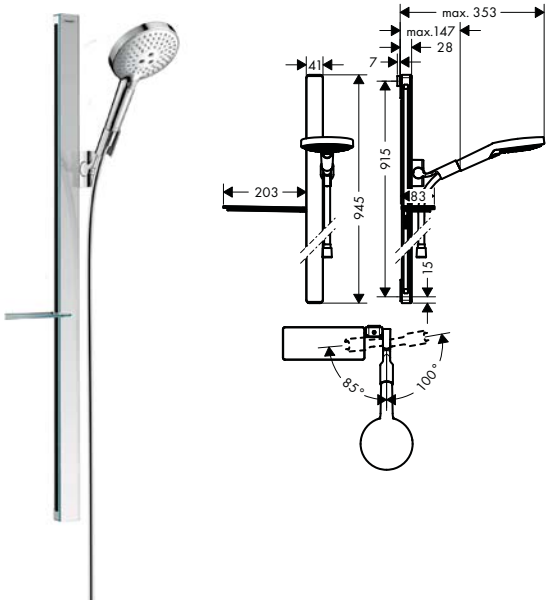

	finish	code no.	Euro
Raindance Select S Shower set 120 3jet with shower bar 90 cm and soap dish	Chrome	27648000	352.30
	White/Chrome	27648400	352.30

Select · Air Power · Quick Clean · XXL Performance

- consists of: hand shower, shower bar, shower hose, slider, soap dish
- shower head size: 125 mm
- spray type: Rain, RainAir, Whirl
- shelf made of safety glass
- convenient diversion via Select button
- pivot connector prevent hose from tangling
- 90° position adjustable slider, pivots left and right, up and down
- maximum flow rate at 3 bar: 15 l/ min
- bar width: 41 mm
- wall supports of plastic
- wall mounting: screw fastening
- wall bar type: flat aluminium profile with safety glass finish
- finish: chrome or white

Consisting of:
- **Raindance Select S** Hand shower 120 3jet (# 26530XXX)
- **Unica** Shower bar E 90 cm with shower hose (# 27640XXX)
- **Casetta** Soap dish/ shelf E (# 26511XXX)

Alternative sizes:

· **Raindance Select S** Shower set 120 3jet with shower bar 150 cm and soap dishes	Chrome	27646000	459.00
	White/Chrome	27646400	459.00

Water saving EcoSmart version:

· **Raindance Select S** Shower set 120 3jet EcoSmart 9 l/ min with shower bar 90 cm and soap dish	Chrome	27649000	352.30
	White/Chrome	27649400	352.30

Measurements within scale drawings are in mm.

Technical specifications and units of measure are subject to change.

Unica Comfort shower sets

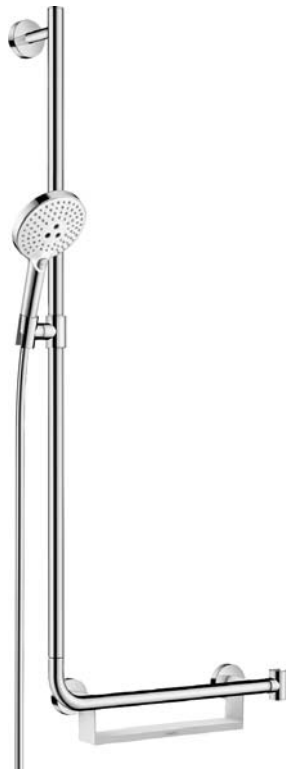

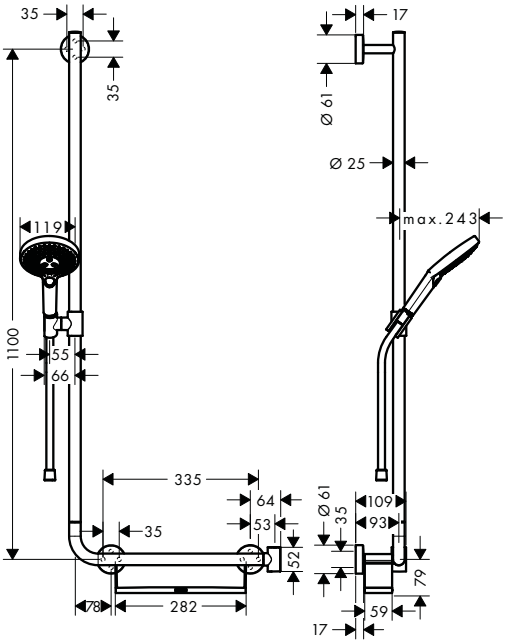

	finish	code no.	Euro
Raindance Select S Shower set 120 3jet with shower bar 110 cm left	Chrome	26324000	385.60
	White/Chrome	26324400	385.60

Select · Air Power · Quick Clean · XXL Performance

- consists of: hand shower, shower bar, shelf, shower hose, slider
- shower head size: 125 mm
- spray type: RainAir, Rain, Whirl
- wallbar could be also used as grab bar
- shelf made of plastic, finish white
- shelf can be removed for cleaning
- convenient diversion via Select button
- pivot connector prevent hose from tangling
- shower holder can be removed
- 90° position adjustable slider, pivots left and right, up and down
- TÜV certified
- metal shower slide
- maximum flow rate at 3 bar: 15 l/min
- bar width: 25 mm
- wall supports of metal

Consisting of:

- **Raindance Select S** Hand shower 120 3jet (# 26530XXX)
- **Unica** Shower bar Comfort 110 cm left (# 26403400)
- **Isiflex** Shower hose 160 cm (# 28276XXX)

Alternative sizes:

Raindance Select S Shower set 120 3jet with shower bar 110 cm right	Chrome	26326000	385.60
	White/Chrome	26326400	385.60

Water saving EcoSmart version:

Raindance Select S Shower set 120 3jet EcoSmart 9 l/min with shower bar 110 cm left	Chrome	26325000	385.60
	White/Chrome	26325400	385.60

Optional parts:

Unica Foot support Comfort	Chrome	26329000	143.20

Measurements within scale drawings are in mm.

Technical specifications and units of measure are subject to change.



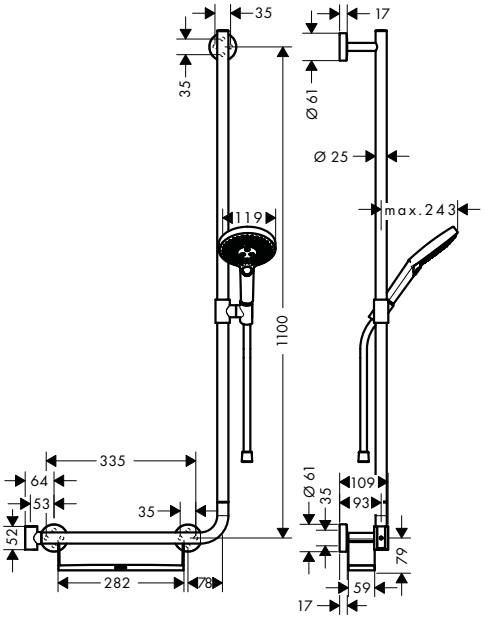

	finish	code no.	Euro
Raindance Select S Shower set 120 3jet with shower bar 110 cm right	Chrome	26326000	385.60
	White/Chrome	26326400	385.60

Select · Air Power · Quick Clean · XXL Performance

- consists of: hand shower, shower bar, shelf, shower hose, slider
- shower head size: 125 mm
- spray type: RainAir, Rain, Whirl
- wallbar could be also used as grab bar
- shelf made of plastic, finish white
- shelf can be removed for cleaning
- convenient diversion via Select button
- pivot connector prevent hose from tangling
- shower holder can be removed
- 90° position adjustable slider, pivots left and right, up and down
- TÜV certified
- metal shower slide
- maximum flow rate at 3 bar: 15 l/min
- bar width: 25 mm
- wall supports of metal

Consisting of:

- **Unica** Shower bar Comfort 110 cm right (# 26404400)
- **Raindance Select S** Hand shower 120 3jet (# 26530XXX)
- **Isiflex** Shower hose 160 cm (# 28276XXX)

Alternative sizes:

Raindance Select S Shower set 120 3jet with shower bar 110 cm left	Chrome	26324000	385.60
	White/Chrome	26324400	385.60

Water saving EcoSmart version:

Raindance Select S Shower set 120 3jet EcoSmart 9 l/min with shower bar 110 cm right	Chrome	26327000	385.60
	White/Chrome	26327400	385.60

Optional parts:

Unica Foot support Comfort	Chrome	26329000	143.20

Measurements within scale drawings are in mm.

Technical specifications and units of measure are subject to change.



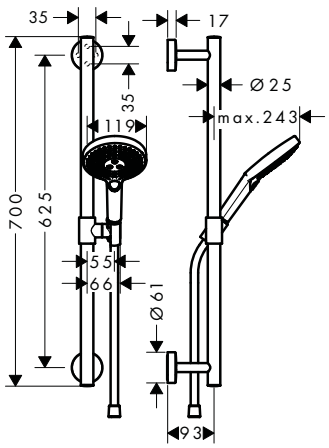

	finish	code no.	Euro
Raindance Select S Shower set 120 3jet with shower bar 65 cm	Chrome	26320000	264.40
	White/Chrome	26320400	264.40

Select · Air Power · Quick Clean · XXL Performance

- consists of: hand shower, shower bar, shower hose, slider
- shower head size: 125 mm
- spray type: Rain, RainAir, Whirl
- wallbar could be also used as grab bar
- convenient diversion via Select button
- pivot connector prevent hose from tangling
- 90° position adjustable slider, pivots left and right, up and down
- TÜV certified
- metal shower slide
- maximum flow rate at 3 bar: 15 l/min
- bar width: 25 mm
- wall supports of metal

Consisting of:

- **Raindance Select S** Hand shower 120 3jet (# 26530XXX)
- **Unica** Shower bar Comfort 65 cm (# 26401000)
- **Isiflex** Shower hose 160 cm (# 28276XXX)

Alternative sizes:

· **Raindance Select S** Shower set 120 3jet with shower bar 90 cm	Chrome	26322000	275.40
	White/Chrome	26322400	275.40
· **Raindance Select S** Shower set 120 3jet EcoSmart 9 l/min with shower bar 90 cm	Chrome	26323000	275.40
	White/Chrome	26323400	275.40

Water saving EcoSmart version:

· **Raindance Select S** Shower set 120 3jet EcoSmart 9 l/min with shower bar 65 cm	Chrome	26321000	264.40
	White/Chrome	26321400	264.40

Optional parts:

· **Unica** Grab handle Comfort with shelf and shower holder	White/Chrome	26328400	139.60
· **Unica** Foot support Comfort	Chrome	26329000	143.20

Measurements within scale drawings are in mm.

Technical specifications and units of measure are subject to change.

Croma Select E shower sets



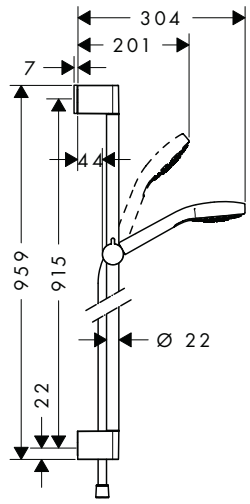

	finish	code no.	Euro
Croma Select E Shower set Multi with shower bar 90 cm · consists of: hand shower, shower bar, shower hose, slider · shower head size: 110 mm · spray type: SoftRain, IntenseRain, Massage spray · convenient diversion via Select button · pivot connector prevent hose from tangling · slide inclination angle can be adjusted by 45° · maximum flow rate at 3 bar: 16 l/min · wall supports of plastic	White/Chrome	26590400	125.00
Consisting of: · **Croma Select E** Hand shower Multi (# 26810400) · **Unica** Shower bar Croma 90 cm (# 26506000) · **Isiflex** Shower hose 160 cm (# 28276XXX)			
Alternative sizes: · **Croma Select E** Shower set Multi with shower bar 65 cm	White/Chrome	26580400	119.10
Water saving EcoSmart version: · **Croma Select E** Shower set Multi EcoSmart 9 l/min with shower bar 90 cm	White/Chrome	26591400	125.00
Optional parts: · Wall bar spacer	Chrome	97450000	8.10



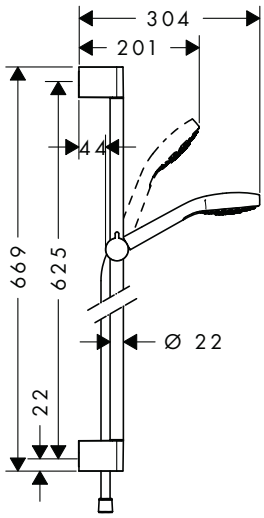

	finish	code no.	Euro
Croma Select E Shower set Multi with shower bar 65 cm · consists of: hand shower, shower bar, shower hose, slider · shower head size: 110 mm · spray type: SoftRain, IntenseRain, Massage spray · convenient diversion via Select button · pivot connector prevent hose from tangling · slide inclination angle can be adjusted by 45° · maximum flow rate at 3 bar: 16 l/min · wall supports of plastic	White/Chrome	26580400	119.10
Consisting of: · **Croma Select E** Hand shower Multi (# 26810400) · **Unica** Shower bar Croma 65 cm (# 26505000) · **Isiflex** Shower hose 160 cm (# 28276XXX)			
Alternative sizes: · **Croma Select E** Shower set Multi with shower bar 90 cm	White/Chrome	26590400	125.00
Water saving EcoSmart version: · **Croma Select E** Shower set Multi EcoSmart 9 l/min with shower bar 65 cm	White/Chrome	26581400	119.10
Optional parts: · Wall bar spacer	Chrome	97450000	8.10

Measurements within scale drawings are in mm.

Technical specifications and units of measure are subject to change.

	finish	code no.	Euro



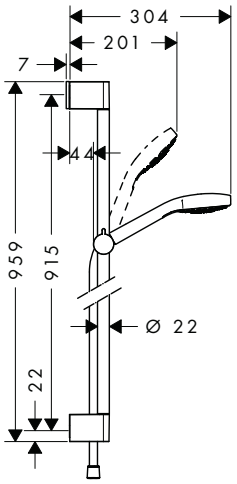

Croma Select E Shower set Vario with shower bar 90 cm

White/Chrome — 26592400 — 110.50

Select · Quick Clean · XXL Performance

- consists of: hand shower, shower bar, shower hose, slider
- shower head size: 110 mm
- spray type: TurboRain, IntenseRain, Rain
- convenient diversion via Select button
- pivot connector prevent hose from tangling
- slide inclination angle can be adjusted by 45°
- maximum flow rate at 3 bar: 15 l/min
- wall supports of plastic

Consisting of:
- **Croma Select E** Hand shower Vario (# 26812400)
- **Unica** Shower bar Croma 90 cm (# 26506000)
- **Isiflex** Shower hose 160 cm (# 28276XXX)

Alternative sizes:
- **Croma Select E** Shower set Vario with shower bar 65 cm — White/Chrome — 26582400 — 104.40

Water saving EcoSmart version:
- **Croma Select E** Shower set Vario EcoSmart 9 l/min with shower bar 90 cm — White/Chrome — 26593400 — 110.50

Optional parts:
- Wall bar spacer — Chrome — 97450000 — 8.10



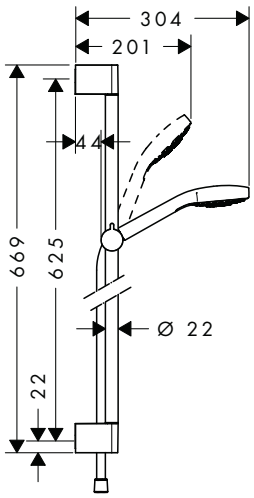

Croma Select E Shower set Vario with shower bar 65 cm

White/Chrome — 26582400 — 104.40

Select · Quick Clean · XXL Performance

- consists of: hand shower, shower bar, shower hose, slider
- shower head size: 110 mm
- spray type: TurboRain, IntenseRain, Rain
- convenient diversion via Select button
- pivot connector prevent hose from tangling
- slide inclination angle can be adjusted by 45°
- maximum flow rate at 3 bar: 15 l/min
- wall supports of plastic

Consisting of:
- **Croma Select E** Hand shower Vario (# 26812400)
- **Unica** Shower bar Croma 65 cm (# 26505000)
- **Isiflex** Shower hose 160 cm (# 28276XXX)

Alternative sizes:
- **Croma Select E** Shower set Vario with shower bar 90 cm — White/Chrome — 26592400 — 110.50

Water saving EcoSmart version:
- **Croma Select E** Shower set Vario EcoSmart 9 l/min with shower bar 65 cm — White/Chrome — 26583400 — 104.40

Alternative products:
- **Croma Select E** Shower set Vario with shower bar 65 cm and soap dish — White/Chrome — 26586400 — 110.50

Optional parts:
- Wall bar spacer — Chrome — 97450000 — 8.10

Measurements within scale drawings are in mm.

Technical specifications and units of measure are subject to change.

	finish	code no.	Euro



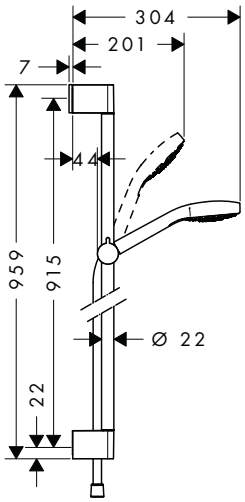

Croma Select E Shower set 1jet with shower bar 90 cm

White/Chrome — 26594400 — 98.70

Quick Clean — XXL Performance

- consists of: hand shower, shower bar, shower hose, slider
- shower head size: 110 mm
- spray type: Rain
- convenient diversion via Select button
- pivot connector prevent hose from tangling
- slide inclination angle can be adjusted by 45°
- maximum flow rate at 3 bar: 16 l/min
- wall supports of plastic

Consisting of:
- **Croma Select E** Hand shower 1jet (# 26814400)
- **Unica** Shower bar Croma 90 cm with shower hose (# 26504000)
- **Isiflex** Shower hose 160 cm (# 28276XXX)

Alternative sizes:

· **Croma Select E** Shower set 1jet with shower bar 65 cm	White/Chrome	26584400	92.80

Water saving EcoSmart version:

· **Croma Select E** Shower set 1jet EcoSmart 9 l/min with shower bar 90 cm	White/Chrome	26595400	98.70

Optional parts:

· Wall bar spacer	Chrome	97450000	8.10



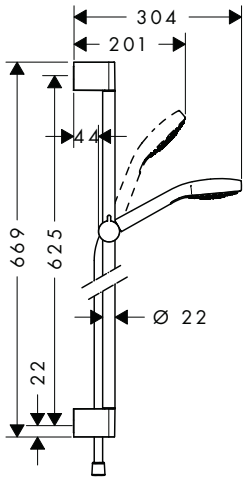

Croma Select E Shower set 1jet with shower bar 65 cm

White/Chrome — 26584400 — 92.80

Quick Clean — XXL Performance

- consists of: hand shower, shower bar, shower hose, slider
- shower head size: 110 mm
- spray type: Rain
- convenient diversion via Select button
- pivot connector prevent hose from tangling
- slide inclination angle can be adjusted by 45°
- maximum flow rate at 3 bar: 16 l/min
- wall supports of plastic

Consisting of:
- **Croma Select E** Hand shower 1jet (# 26814400)
- **Unica** Shower bar Croma 65 cm with shower hose (# 26503000)
- **Isiflex** Shower hose 160 cm (# 28276XXX)

Alternative sizes:

· **Croma Select E** Shower set 1jet with shower bar 90 cm	White/Chrome	26594400	98.70

Water saving EcoSmart version:

· **Croma Select E** Shower set 1jet EcoSmart 9 l/min with shower bar 65 cm	White/Chrome	26585400	92.80

Optional parts:

· Wall bar spacer	Chrome	97450000	8.10

Measurements within scale drawings are in mm.

	finish	code no.	Euro



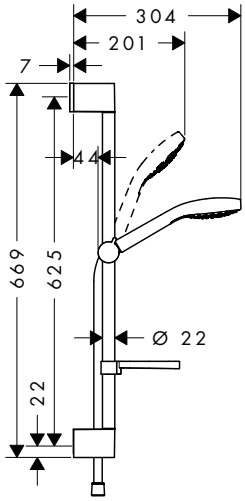

Croma Select E Shower set Vario with shower bar 65 cm and soap dish

White/Chrome — 26586400 — 110.50

- consists of: hand shower, shower bar, shower hose, slider, soap dish
- shower head size: 110 mm
- spray type: TurboRain, IntenseRain, Rain
- convenient diversion via Select button
- pivot connector prevent hose from tangling
- slide inclination angle can be adjusted by 45°
- maximum flow rate at 3 bar: 15 l/min
- wall supports of plastic

Consisting of:
- **Croma Select E** Hand shower Vario (# 26812400)
- **Unica** Shower bar Croma 65 cm with shower hose (# 26503000)
- **Isiflex** Shower hose 160 cm (# 28276XXX)
- **Casetta** Soap dish E (# 26519000)

Alternative products:
- **Croma Select E** Shower set Vario with shower bar 65 cm — White/Chrome — 26582400 — 104.40

Optional parts:
- Wall bar spacer — Chrome — 97450000 — 8.10

Croma Select S shower sets



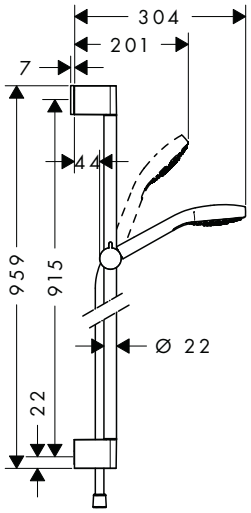

Croma Select S Shower set Multi with shower bar 90 cm

White/Chrome — 26570400 — 125.00

- consists of: hand shower, shower bar, shower hose, slider
- shower head size: 110 mm
- spray type: SoftRain, IntenseRain, Massage spray
- convenient diversion via Select button
- pivot connector prevent hose from tangling
- slide inclination angle can be adjusted by 45°
- maximum flow rate at 3 bar: 16 l/min
- wall supports of plastic

Consisting of:
- **Croma Select S** Hand shower Multi (# 26800400)
- **Unica** Shower bar Croma 90 cm with shower hose (# 26504000)
- **Isiflex** Shower hose 160 cm (# 28276XXX)

Alternative sizes:
- **Croma Select S** Shower set Multi with shower bar 65 cm — White/Chrome — 26560400 — 119.10

Water saving EcoSmart version:
- **Croma Select S** Shower set Multi EcoSmart 9 l/min with shower bar 90 cm — White/Chrome — 26571400 — 125.00

Optional parts:
- Wall bar spacer — Chrome — 97450000 — 8.10

Measurements within scale drawings are in mm.

Technical specifications and units of measure are subject to change.

	finish	code no.	Euro



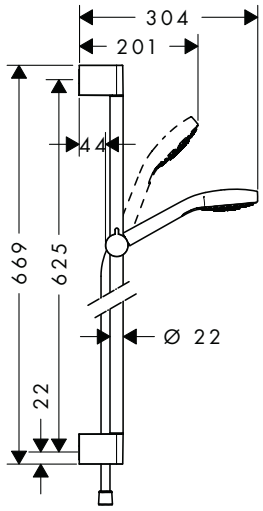

Croma Select S Shower set Multi with shower bar 65 cm

	finish	code no.	Euro
	White/Chrome	26560400	119.10

Select · Quick Clean · XXL Performance

- consists of: hand shower, shower bar, shower hose, slider
- shower head size: 110 mm
- spray type: SoftRain, IntenseRain, Massage spray
- convenient diversion via Select button
- pivot connector prevent hose from tangling
- slide inclination angle can be adjusted by 45°
- maximum flow rate at 3 bar: 16 l/min
- wall supports of plastic

Consisting of:
- **Croma Select S** Hand shower Multi (# 26800400)
- **Unica** Shower bar Croma 65 cm with shower hose (# 26503000)
- **Isiflex** Shower hose 160 cm (# 28276XXX)

Alternative sizes:

· **Croma Select S** Shower set Multi with shower bar 90 cm	White/Chrome	26570400	125.00

Water saving EcoSmart version:

· **Croma Select S** Shower set Multi EcoSmart 9 l/min with shower bar 65 cm	White/Chrome	26561400	119.10

Optional parts:

· Wall bar spacer	Chrome	97450000	8.10



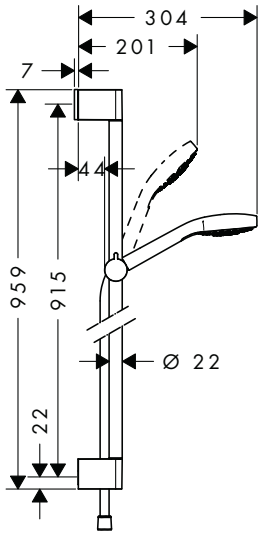

Croma Select S Shower set Vario with shower bar 90 cm

	finish	code no.	Euro
	White/Chrome	26572400	110.50

Select · Quick Clean · XXL Performance

- consists of: hand shower, shower bar, shower hose, slider
- shower head size: 110 mm
- spray type: Rain, TurboRain, IntenseRain
- convenient diversion via Select button
- pivot connector prevent hose from tangling
- slide inclination angle can be adjusted by 45°
- maximum flow rate at 3 bar: 15 l/min
- wall supports of plastic

Consisting of:
- **Croma Select S** Hand shower Vario (# 26802400)
- **Unica** Shower bar Croma 90 cm with shower hose (# 26504000)
- **Isiflex** Shower hose 160 cm (# 28276XXX)

Alternative sizes:

· **Croma Select S** Shower set Vario with shower bar 65 cm	White/Chrome	26562400	104.40

Water saving EcoSmart version:

· **Croma Select S** Shower set Vario EcoSmart 9 l/min with shower bar 90 cm	White/Chrome	26573400	110.50

Optional parts:

· Wall bar spacer	Chrome	97450000	8.10

Measurements within scale drawings are in mm.

Technical specifications and units of measure are subject to change.

	finish	code no.	Euro



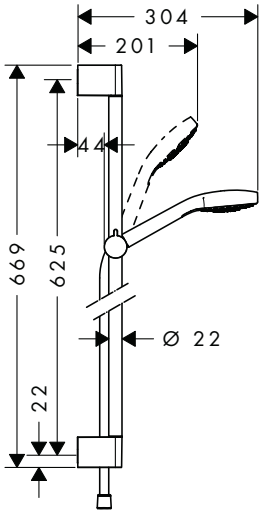

Croma Select S Shower set Vario with shower bar 65 cm

White/Chrome | 26562400 | 104.40

- consists of: hand shower, shower bar, shower hose, slider
- shower head size: 110 mm
- spray type: Rain, IntenseRain, TurboRain
- convenient diversion via Select button
- pivot connector prevent hose from tangling
- slide inclination angle can be adjusted by 45°
- maximum flow rate at 3 bar: 15 l/min
- wall supports of plastic

Consisting of:
- **Croma Select S** Hand shower Vario (# 26802400)
- **Unica** Shower bar Croma 65 cm with shower hose (# 26503000)
- **Isiflex** Shower hose 160 cm (# 28276XXX)

Alternative sizes:

White/Chrome | 26572400 | 110.50

- **Croma Select S** Shower set Vario with shower bar 90 cm

Water saving EcoSmart version:

White/Chrome | 26563400 | 104.40

- **Croma Select S** Shower set Vario EcoSmart 9 l/min with shower bar 65 cm

Alternative products:

White/Chrome | 26566400 | 110.50

- **Croma Select S** Shower set Vario with shower bar 65 cm and soap dish

Optional parts:

Chrome | 97450000 | 8.10

- Wall bar spacer



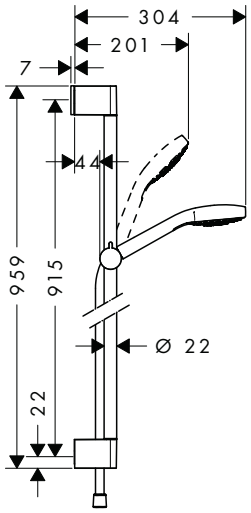

Croma Select S Shower set 1jet with shower bar 90 cm

White/Chrome | 26574400 | 98.70

- consists of: hand shower, shower bar, shower hose, slider
- shower head size: 110 mm
- spray type: Rain
- pivot connector prevent hose from tangling
- slide inclination angle can be adjusted by 45°
- maximum flow rate at 3 bar: 16 l/min
- wall supports of plastic

Consisting of:
- **Croma Select S** Hand shower 1jet (# 26804400)
- **Unica** Shower bar Croma 90 cm with shower hose (# 26504000)
- **Isiflex** Shower hose 160 cm (# 28276XXX)

Alternative sizes:

White/Chrome | 26564400 | 92.80

- **Croma Select S** Shower set 1jet with shower bar 65 cm

Water saving EcoSmart version:

White/Chrome | 26575400 | 98.70

- **Croma Select S** Shower set 1jet EcoSmart 9 l/min with shower bar 90 cm

Optional parts:

Chrome | 97450000 | 8.10

- Wall bar spacer

Measurements within scale drawings are in mm.

Technical specifications and units of measure are subject to change.

	finish	code no.	Euro



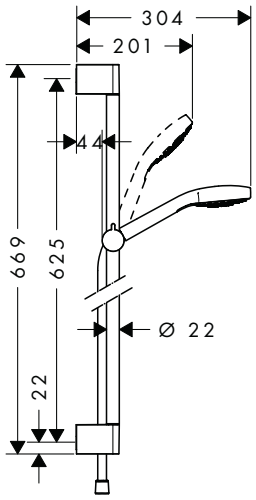

Croma Select S Shower set 1jet with shower bar 65 cm

White/Chrome | 26564400 | 92.80

- consists of: hand shower, shower bar, shower hose, slider
- shower head size: 110 mm
- spray type: Rain
- pivot connector prevent hose from tangling
- slide inclination angle can be adjusted by 45°
- maximum flow rate at 3 bar: 16 l/min
- wall supports of plastic

Consisting of:
- **Croma Select S** Hand shower 1jet (# 26804400)
- **Unica** Shower bar Croma 65 cm with shower hose (# 26503000)
- **Isiflex** Shower hose 160 cm (# 28276XXX)

Alternative sizes:

White/Chrome | 26574400 | 98.70
- **Croma Select S** Shower set 1jet with shower bar 90 cm

Water saving EcoSmart version:

White/Chrome | 26565400 | 92.80
- **Croma Select S** Shower set 1jet EcoSmart 9 l/min with shower bar 65 cm

Optional parts:

Chrome | 97450000 | 8.10
- Wall bar spacer



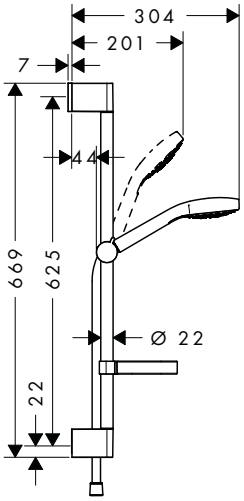

Croma Select S Shower set Vario with shower bar 65 cm and soap dish

White/Chrome | 26566400 | 110.50

- consists of: hand shower, shower bar, shower hose, slider, soap dish
- shower head size: 110 mm
- spray type: Rain, TurboRain, IntenseRain
- convenient diversion via Select button
- pivot connector prevent hose from tangling
- slide inclination angle can be adjusted by 45°
- maximum flow rate at 3 bar: 15 l/min
- wall supports of plastic

Consisting of:
- **Croma Select S** Hand shower Vario (# 26802400)
- **Unica** Shower bar Croma 65 cm with shower hose (# 26503000)
- **Isiflex** Shower hose 160 cm (# 28276XXX)
- **Casetta** Soap dish C (# 28678000)

Alternative products:

White/Chrome | 26562400 | 104.40
- **Croma Select S** Shower set Vario with shower bar 65 cm

Optional parts:

Chrome | 97450000 | 8.10
- Wall bar spacer

Measurements within scale drawings are in mm.

Technical specifications and units of measure are subject to change.

PuraVida shower set



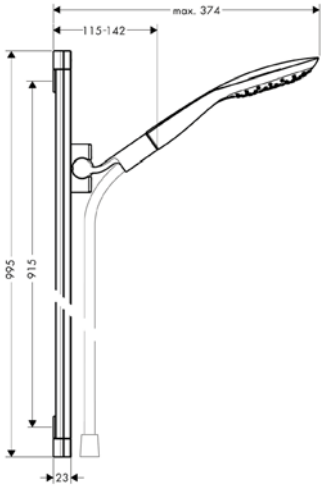

PuraVida Shower set with shower bar 90 cm

- consists of: hand shower, shower bar, shower hose, slider
- shower head size: 150 mm
- spray type: RainAir, CaresseAir, Mix
- convenient diversion via Select button
- pivot connector prevent hose from tangling
- 90° position adjustable slider, pivots left and right, up and down
- maximum flow rate at 3 bar: 16 l/min
- wall supports of plastic

Consisting of:
- **PuraVida** Hand shower 150 3jet (# 28557XXX)
- **Unica** Shower bar PuraVida 90 cm with shower hose (# 27844000)
- **Isiflex** Shower hose 160 cm (# 28276XXX)

Optional parts:
- **Raindance** Corner fitting set
- **Raindance** Wall bar spacer

finish	code no.	Euro
Chrome	27853000	415.20
White/Chrome	27853400	415.20
	28694000	32.70
Chrome	98993000	7.60

Select · Air Power · Quick Clean · XXL Performance

Croma 100 shower sets



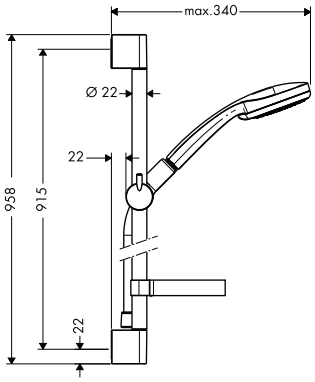

Croma 100 Shower set Multi with shower bar 90 cm and soap dish

- consists of: hand shower, shower bar, shower hose, slider, soap dish
- shower head size: 100 mm
- spray type: Rain, MonoRain, Massage spray
- spray type adjustment by turning spray disc
- pivot connector prevent hose from tangling
- 90° position adjustable slider, pivots left and right, up and down
- maximum flow rate at 3 bar: 19 l/min
- wall supports of plastic

Consisting of:
- **Croma 100** Hand shower Multi (# 28536XXX)
- **Unica** Shower bar C 90 cm with shower hose (# 27610000)
- **Isiflex** Shower hose 160 cm (# 28276XXX)
- **Casetta** Soap dish C (# 28678000)

Optional parts:
- Wall bar spacer

finish	code no.	Euro
Chrome	27774000	134.60
Chrome	97450000	8.10

Quick Clean · XXL Performance

Measurements within scale drawings are in mm.

Technical specifications and units of measure are subject to change.

	finish	code no.	Euro

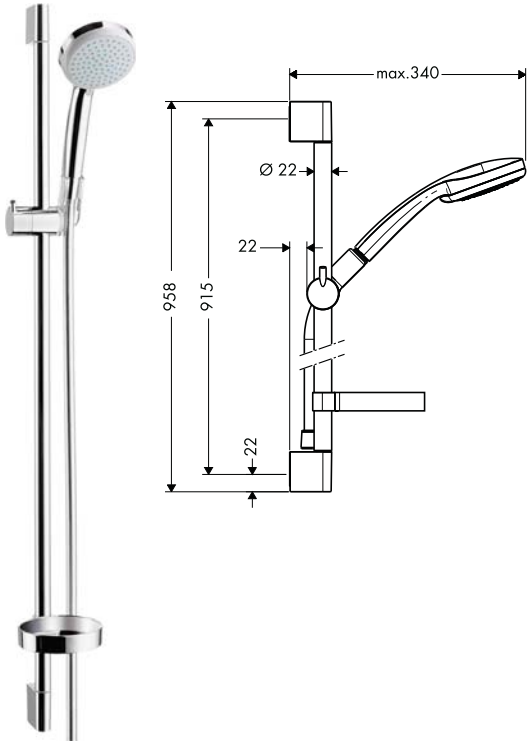

Croma 100 Shower set Vario with shower bar 90 cm and soap dish

Chrome	27771000	107.80

- consists of: hand shower, shower bar, shower hose, slider, soap dish
- shower head size: 100 mm
- spray type: Rain, Shampoo spray, normal spray, Massage spray
- spray type adjustment by turning spray disc
- pivot connector prevent hose from tangling
- 90° position adjustable slider, pivots left and right, up and down
- maximum flow rate at 3 bar: 18 l/min
- wall supports of plastic

Consisting of:
- **Croma 100** Hand shower Vario (# 28535000)
- **Unica** Shower bar C 90 cm with shower hose (# 27610000)
- **Isiflex** Shower hose 160 cm (# 28276XXX)
- **Casetta** Soap dish C (# 28678000)

Alternative sizes:

· **Croma 100** Shower set Vario with shower bar 65 cm and soap dish	Chrome	27772000	99.40

Water saving EcoSmart version:

· **Croma 100** Shower set Vario EcoSmart 9 l/min with shower bar 90 cm and soap dish	Chrome	27653000	112.20

Optional parts:

· Wall bar spacer	Chrome	97450000	8.10

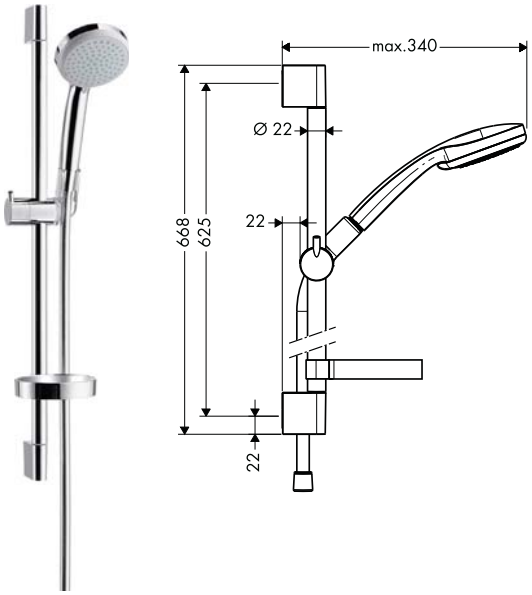

Croma 100 Shower set Vario with shower bar 65 cm and soap dish

Chrome	27772000	99.40

- consists of: hand shower, shower bar, shower hose, slider, soap dish
- shower head size: 100 mm
- spray type: Rain, Shampoo spray, normal spray, Massage spray
- spray type adjustment by turning spray disc
- pivot connector prevent hose from tangling
- 90° position adjustable slider, pivots left and right, up and down
- maximum flow rate at 3 bar: 18 l/min
- wall supports of plastic

Consisting of:
- **Croma 100** Hand shower Vario (# 28535000)
- **Unica** Shower bar C 65 cm with shower hose (# 27611000)
- **Isiflex** Shower hose 160 cm (# 28276XXX)
- **Casetta** Soap dish C (# 28678000)

Alternative sizes:

· **Croma 100** Shower set Vario with shower bar 90 cm and soap dish	Chrome	27771000	107.80

Water saving EcoSmart version:

· **Croma 100** Shower set Vario EcoSmart 9 l/min with shower bar 65 cm and soap dish	Chrome	27776000	108.70

Optional parts:

· Wall bar spacer	Chrome	97450000	8.10

Measurements within scale drawings are in mm.

Technical specifications and units of measure are subject to change.

	finish	code no.	Euro

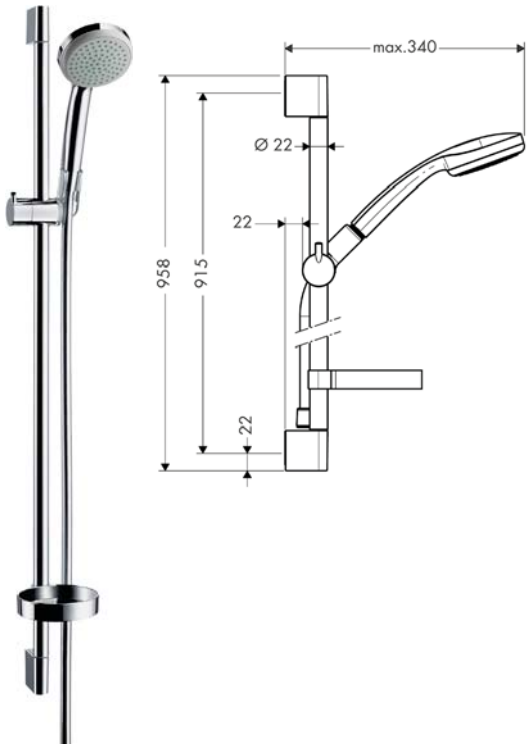

Croma 100 Shower set Mono with shower bar 90 cm and soap dish

	Chrome	27724000	93.60

Quick Clean · XXL Performance

- consists of: hand shower, shower bar, shower hose, slider, soap dish
- shower head size: 100 mm
- spray type: Rain
- pivot connector prevent hose from tangling
- 90° position adjustable slider, pivots left and right, up and down
- maximum flow rate at 3 bar: 16 l/min
- wall supports of plastic

Consisting of:
- **Croma 100** Hand shower 1jet (# 28580000)
- **Unica** Shower bar C 90 cm with shower hose (# 27610000)
- **Isiflex** Shower hose 160 cm (# 28276XXX)
- **Casetta** Soap dish C (# 28678000)

Alternative sizes:

· **Croma 100** Shower set Mono with shower bar 65 cm and soap dish	Chrome	27717000	86.20

Optional parts:

· Wall bar spacer	Chrome	97450000	8.10

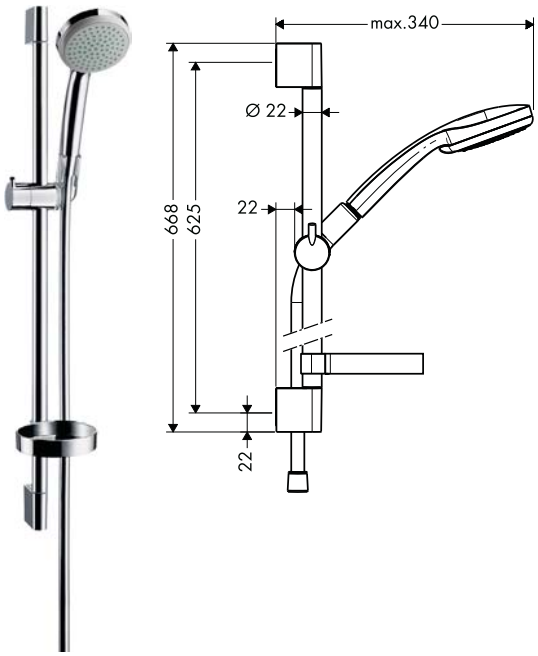

Croma 100 Shower set Mono with shower bar 65 cm and soap dish

	Chrome	27717000	86.20

Quick Clean · XXL Performance

- consists of: hand shower, shower bar, shower hose, slider, soap dish
- shower head size: 100 mm
- spray type: Rain
- pivot connector prevent hose from tangling
- 90° position adjustable slider, pivots left and right, up and down
- maximum flow rate at 3 bar: 16 l/min
- wall supports of plastic

Consisting of:
- **Croma 100** Hand shower 1jet (# 28580000)
- **Unica** Shower bar C 65 cm with shower hose (# 27611000)
- **Isiflex** Shower hose 160 cm (# 28276XXX)
- **Casetta** Soap dish C (# 28678000)

Alternative sizes:

· **Croma 100** Shower set Mono with shower bar 90 cm and soap dish	Chrome	27724000	93.60

Optional parts:

· Wall bar spacer	Chrome	97450000	8.10

Measurements within scale drawings are in mm.

Technical specifications and units of measure are subject to change.

	finish	code no.	Euro

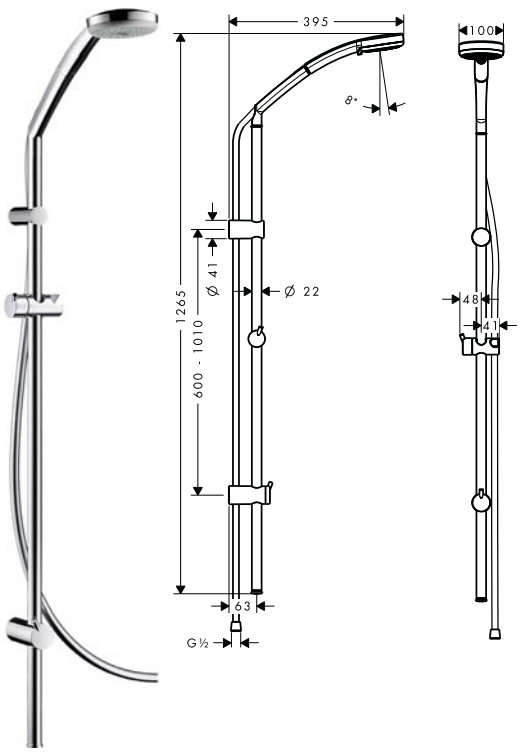

Croma 100 Shower set Multi with shower bar Unica'Reno Lift 105 cm

Chrome | 27791000 | 187.00

- consists of: hand shower, shower bar, shower hose, slider
- shower head size: 100 mm
- spray type: Rain, Massage spray, MonoRain
- spray type adjustment by turning spray disc
- pivot connector prevent hose from tangling
- 90° position adjustable slider, pivots left and right, up and down
- maximum flow rate at 3 bar: 19 l/min
- wall supports of plastic

Consisting of:
- **Croma 100** Hand shower Multi (# 28536XXX)
- **Isiflex** Shower hose 200 cm (# 28274000)

Crometta 100 shower sets

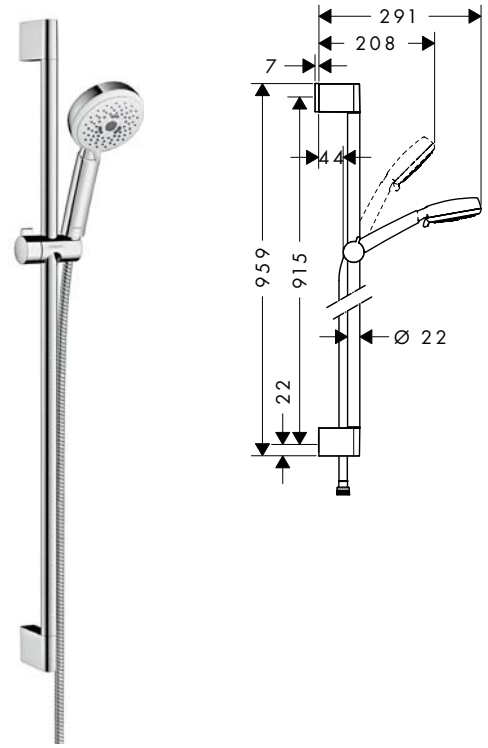

Crometta 100 Shower set Multi with shower bar 90 cm

White/Chrome | 26656400 | 91.70

- consists of: hand shower, shower bar, shower hose, slider
- shower head size: 100 mm
- spray type: Rain, TurboRain, Massage spray
- spray type adjustment by turning spray disc
- without pivot joints
- slide inclination angle can be adjusted by 45°
- maximum flow rate at 3 bar: 19 l/min
- wall supports of plastic

Consisting of:
- **Crometta 100** Hand shower Multi (# 26823400)
- **Unica** Shower bar Croma 90 cm with shower hose (# 26504000)
- **Metaflex** Shower hose 160 cm (# 28266000)

Alternative sizes:
- **Crometta 100** Shower set Multi with shower bar 65 cm — White/Chrome | 26650400 | 85.90

Optional parts:
- Wall bar spacer — Chrome | 97450000 | 8.10

Measurements within scale drawings are in mm.

Technical specifications and units of measure are subject to change.

	finish	code no.	Euro



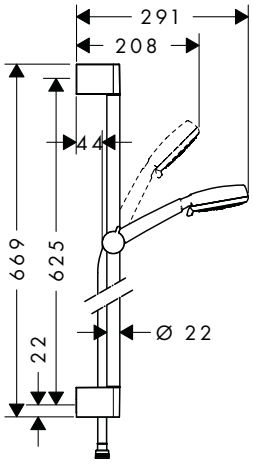

Crometta 100 Shower set Multi with shower bar 65 cm

White/Chrome — 26650400 — 85.90

Quick Clean · XXL Performance

- consists of: hand shower, shower bar, shower hose, slider
- shower head size: 100 mm
- spray type: Rain, TurboRain, Massage spray
- spray type adjustment by turning spray disc
- without pivot joints
- slide inclination angle can be adjusted by 45°
- maximum flow rate at 3 bar: 19 l/min
- the adjustable handshower holder on this model should not be used with a handshower with a spray face larger than 125 mm in diameter
- wall supports of plastic

Consisting of:
- **Crometta 100** Hand shower Multi (# 26823400)
- **Unica** Shower bar Croma 65 cm with shower hose (# 26503000)
- **Metaflex** Shower hose 160 cm (# 28266000)

Alternative sizes:

· **Crometta 100** Shower set Multi with shower bar 90 cm	White/Chrome	26656400	91.70

Optional parts:

· Wall bar spacer	Chrome	97450000	8.10



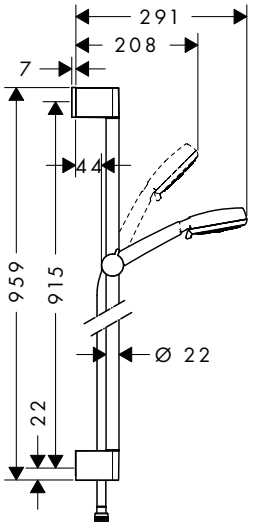

Crometta 100 Shower set Vario with shower bar 90 cm

White/Chrome — 26657400 — 83.50

Quick Clean · XXL Performance

- consists of: hand shower, shower bar, shower hose, slider
- shower head size: 100 mm
- spray type: Rain, normal spray, Shampoo spray, Massage spray
- spray type adjustment by turning spray disc
- without pivot joints
- slide inclination angle can be adjusted by 45°
- maximum flow rate at 3 bar: 18 l/min
- wall supports of plastic

Consisting of:
- **Crometta 100** Hand shower Vario (# 26824400)
- **Unica** Shower bar Croma 90 cm with shower hose (# 26504000)
- **Metaflex** Shower hose 160 cm (# 28266000)

Alternative sizes:

· **Crometta 100** Shower set Vario with shower bar 65 cm	White/Chrome	26651400	77.80

Optional parts:

· Wall bar spacer for Croma 100 Showerpipe	Chrome	95239000	10.20

Measurements within scale drawings are in mm.

Technical specifications and units of measure are subject to change.

	finish	code no.	Euro



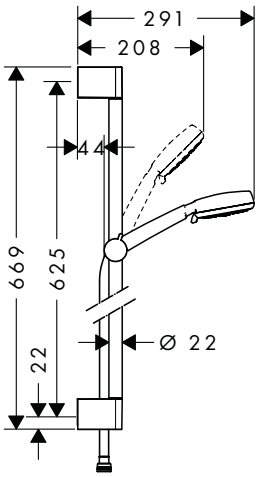

Crometta 100 Shower set Vario with shower bar 65 cm

White/Chrome 26651400 77.80

Quick Clean XXL Performance

- consists of: hand shower, shower bar, shower hose, slider
- shower head size: 100 mm
- spray type: Rain, normal spray, Shampoo spray, Massage spray
- spray type adjustment by turning spray disc
- without pivot joints
- slide inclination angle can be adjusted by 45°
- maximum flow rate at 3 bar: 18 l/min
- wall supports of plastic

Consisting of:
- **Crometta 100** Hand shower Vario (# 26824400)
- **Unica** Shower bar Croma 65 cm with shower hose (# 26503000)
- **Metaflex** Shower hose 160 cm (# 28266000)

Alternative sizes:
- **Crometta 100** Shower set Vario with shower bar 90 cm — White/Chrome 26657400 83.50

Water saving EcoSmart version:
- **Crometta 100** Shower set Vario EcoSmart 9 l/min with shower bar 65 cm — White/Chrome 26654400 77.80

Optional parts:
- Wall bar spacer — Chrome 97450000 8.10



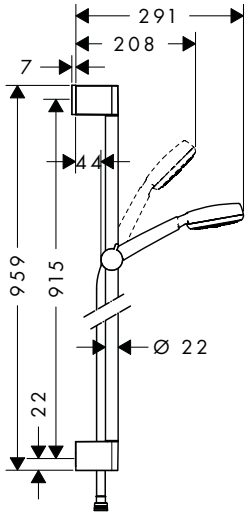

Crometta 100 Shower set 1jet with shower bar 90 cm

White/Chrome 26658400 77.60

Quick Clean XXL Performance

- consists of: hand shower, shower bar, shower hose, slider
- shower head size: 100 mm
- spray type: Rain
- without pivot joints
- slide inclination angle can be adjusted by 45°
- maximum flow rate at 3 bar: 16 l/min
- wall supports of plastic

Consisting of:
- **Crometta 100** Hand shower 1jet (# 26825400)
- **Unica** Shower bar Croma 90 cm with shower hose (# 26504000)
- **Metaflex** Shower hose 160 cm (# 28266000)

Alternative sizes:
- **Crometta 100** Shower set 1jet with shower bar 65 cm — White/Chrome 26652400 71.70

Optional parts:
- Wall bar spacer — Chrome 97450000 8.10

Measurements within scale drawings are in mm.

Technical specifications and units of measure are subject to change.

	finish	code no.	Euro
Crometta 100 Shower set 1jet with shower bar 65 cm	White/Chrome	26652400	71.70



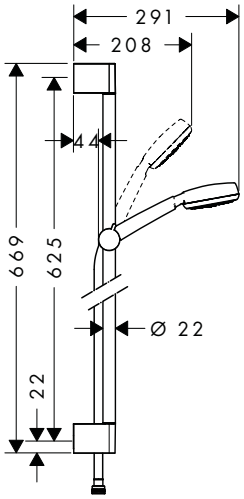

- consists of: hand shower, shower bar, shower hose, slider
- shower head size: 100 mm
- spray type: Rain
- without pivot joints
- slide inclination angle can be adjusted by 45°
- maximum flow rate at 3 bar: 16 l/min
- wall supports of plastic

Consisting of:
- **Crometta 100** Hand shower 1jet (# 26825400)
- **Unica** Shower bar Croma 65 cm with shower hose (# 26503000)
- **Metaflex** Shower hose 160 cm (# 28266000)

Alternative sizes:			
· **Crometta 100** Shower set 1jet with shower bar 90 cm	White/Chrome	26658400	77.60
Water saving EcoSmart version:			
· **Crometta 100** Shower set 1jet EcoSmart 9 l/min with shower bar 65 cm	White/Chrome	26655400	71.70
Optional parts:			
· Wall bar spacer	Chrome	97450000	8.10

Crometta shower sets

Crometta Shower set Vario with shower bar 90 cm	White/Chrome	26536400	53.90



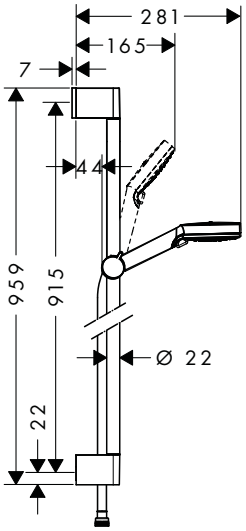

- consists of: hand shower, shower bar, shower hose, slider
- shower head size: 100 mm
- spray type: Rain, IntenseRain
- spray type adjustment by turning spray disc
- pivot connector prevent hose from tangling
- slide inclination angle can be adjusted by 45°
- maximum flow rate at 3 bar: 14 l/min
- bar width: 22 mm
- wall supports of plastic

Consisting of:
- **Crometta** Hand shower Vario (# 26330400)
- **Unica** Shower bar Croma 90 cm (# 26506000)
- **Comfortflex** Shower hose 160 cm (# 28168000)

Alternative sizes:			
· **Crometta** Shower set Vario with shower bar 65 cm	White/Chrome	26532400	48.20
Water saving EcoSmart version:			
· **Crometta** Shower set Vario EcoSmart 9 l/min with shower bar 90 cm	White/Chrome	26538400	55.90
Optional parts:			
· Wall bar spacer	Chrome	97450000	8.10

Measurements within scale drawings are in mm.

Technical specifications and units of measure are subject to change.



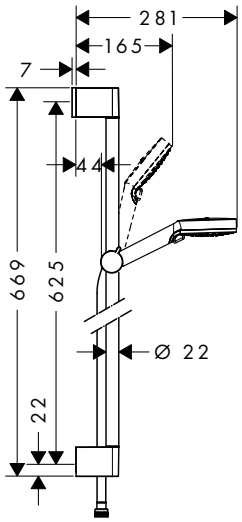

	finish	code no.	Euro
Crometta Shower set Vario with shower bar 65 cm · consists of: hand shower, shower bar, shower hose, slider · shower head size: 100 mm · spray type: Rain, IntenseRain · spray type adjustment by turning spray disc · pivot connector prevent hose from tangling · slide inclination angle can be adjusted by 45° · maximum flow rate at 3 bar: 14 l/min · bar width: 22 mm · wall supports of plastic	White/Chrome	26532400	48.20
Consisting of: · **Crometta** Hand shower Vario (# 26330400) · **Unica** Shower bar Croma 65 cm (# 26505000) · **Comfortflex** Shower hose 160 cm (# 28168000)			
Alternative sizes:			
· **Crometta** Shower set Vario with shower bar 90 cm	White/Chrome	26536400	53.90
Water saving EcoSmart version:			
· **Crometta** Shower set Vario EcoSmart 9 l/min with shower bar 65 cm	White/Chrome	26534400	50.60
· **Crometta** Shower set Vario Green 6 l/min with shower bar 65 cm	White/Chrome	26555400	50.60
Alternative products:			
· **Crometta** Shower set Vario with shower bar 65 cm and soap dish	White/Chrome	26553400	53.90
Optional parts:			
· Wall bar spacer	Chrome	97450000	8.10

Measurements within scale drawings are in mm.

Technical specifications and units of measure are subject to change.

	finish	code no.	Euro



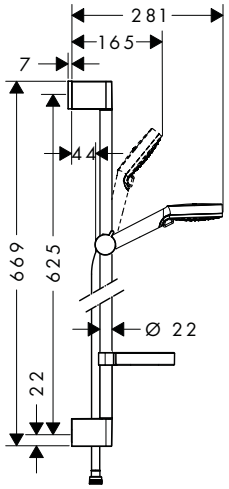

Crometta Shower set Vario with shower bar 65 cm and soap dish

White/Chrome — 26553400 — 53.90

Quick Clean · XXL Performance

- consists of: hand shower, shower bar, shower hose, slider, soap dish
- shower head size: 100 mm
- spray type: Rain, IntenseRain
- spray type adjustment by turning spray disc
- pivot connector prevent hose from tangling
- slide inclination angle can be adjusted by 45°
- maximum flow rate at 3 bar: 14 l/min
- bar width: 22 mm
- wall supports of plastic

Consisting of:
- **Unica** Shower bar Croma 65 cm (# 26505000)
- **Crometta** Hand shower Vario (# 26330400)
- **Casetta** Soap dish C (# 28678000)
- **Comfortflex** Shower hose 160 cm (# 28168000)

Alternative products:

· **Crometta** Shower set Vario with shower bar 65 cm	White/Chrome	26532400	48.20

Optional parts:

· Wall bar spacer	Chrome	97450000	8.10



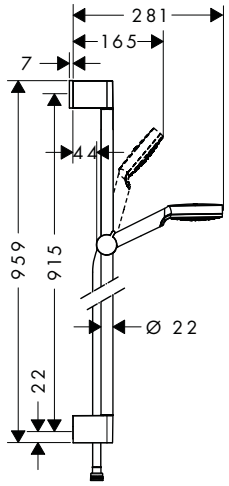

Crometta Shower set 1jet with shower bar 90 cm

White/Chrome — 26537400 — 51.60

Quick Clean · XXL Performance

- consists of: hand shower, shower bar, shower hose, slider
- shower head size: 100 mm
- spray type: Rain
- pivot connector prevent hose from tangling
- slide inclination angle can be adjusted by 45°
- maximum flow rate at 3 bar: 14 l/min
- bar width: 22 mm
- wall supports of plastic

Consisting of:
- **Crometta** Hand shower 1jet (# 26331400)
- **Unica** Shower bar Croma 90 cm (# 26506000)
- **Comfortflex** Shower hose 160 cm (# 28168000)

Alternative sizes:

· **Crometta** Shower set 1jet with shower bar 65 cm	White/Chrome	26533400	46.10

Water saving EcoSmart version:

· **Crometta** Shower set 1jet EcoSmart 9 l/min with shower bar 90 cm	White/Chrome	26539400	53.90

Optional parts:

· Wall bar spacer	Chrome	97450000	8.10

Measurements within scale drawings are in mm.

Technical specifications and units of measure are subject to change.

	finish	code no.	Euro



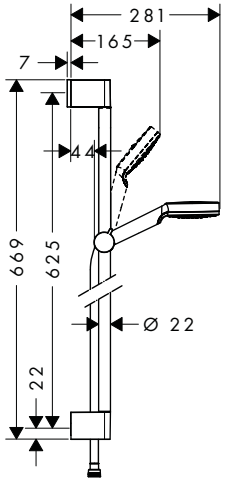

Crometta Shower set 1jet with shower bar 65 cm — White/Chrome — 26533400 — 46.10

- consists of: hand shower, shower bar, shower hose, slider
- shower head size: 100 mm
- spray type: Rain
- pivot connector prevent hose from tangling
- slide inclination angle can be adjusted by 45°
- maximum flow rate at 3 bar: 14 l/min
- bar width: 22 mm
- wall supports of plastic

Consisting of:
- **Crometta** Hand shower 1jet (# 26331400)
- **Unica** Shower bar Croma 65 cm (# 26505000)
- **Comfortflex** Shower hose 160 cm (# 28168000)

Alternative sizes:
- **Crometta** Shower set 1jet with shower bar 90 cm — White/Chrome — 26537400 — 51.60

Water saving EcoSmart version:
- **Crometta** Shower set 1jet EcoSmart 9 l/min with shower bar 65 cm — White/Chrome — 26535400 — 48.20
- **Crometta** Shower set 1jet Green 6 l/min with shower bar 65 cm — White/Chrome — 26554400 — 48.20

Optional parts:
- Wall bar spacer — Chrome — 97450000 — 8.10

Crometta 85 shower sets



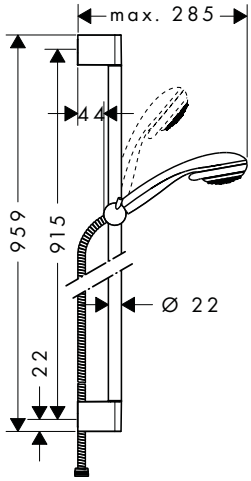

Crometta 85 Shower set Multi with shower bar 90 cm — Chrome — 27766000 — 75.20

- consists of: hand shower, shower bar, shower hose, slider
- shower head size: 85 mm
- spray type: Massage spray, MonoRain, normal spray
- spray type adjustment by turning spray disc
- without pivot joints
- 90° position adjustable slider, pivots left and right, up and down
- maximum flow rate at 3 bar: 16 l/min
- wall supports of plastic

Consisting of:
- **Crometta 85** Hand shower Multi (# 28563000)
- **Unica** Shower bar Crometta 90 cm with shower hose (# 27614000)
- **Metaflex** Shower hose 160 cm (# 28266000)

Alternative sizes:
- **Crometta 85** Shower set Multi with shower bar 65 cm — Chrome — 27767000 — 71.80

Optional parts:
- **Casetta** Soap dish C — Chrome — 28678000 — 14.70
- Wall bar spacer — Chrome — 97450000 — 8.10

Measurements within scale drawings are in mm.

Technical specifications and units of measure are subject to change.

	finish	code no.	Euro



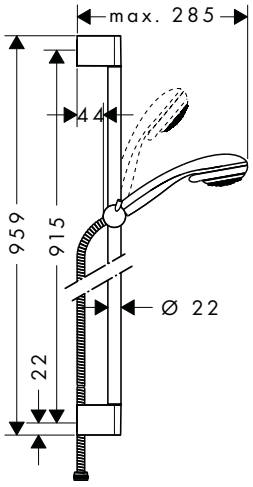

Crometta 85 Shower set Vario with shower bar 90 cm

Chrome 27762000 60.80

Quick Clean

- consists of: hand shower, shower bar, shower hose, slider
- shower head size: 85 mm
- spray type: normal spray, Vario spray
- spray type adjustment by turning spray disc
- without pivot joints
- 90° position adjustable slider, pivots left and right, up and down
- maximum flow rate at 3 bar: 17 l/min
- wall supports of plastic

Consisting of:
- **Crometta 85** Hand shower Vario (# 28562000)
- **Unica** Shower bar Crometta 90 cm with shower hose (# 27614000)

Alternative sizes:
- **Crometta 85** Shower set Vario with shower bar 65 cm — Chrome 27763000 57.20

Optional parts:
- **Casetta** Soap dish C — Chrome 28678000 14.70
- Wall bar spacer — Chrome 97450000 8.10

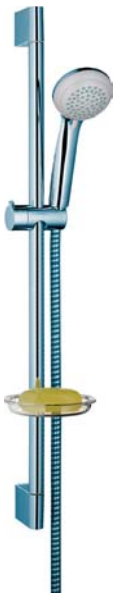

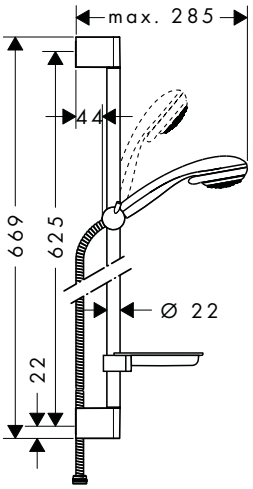

Crometta 85 Shower set Vario with shower bar 65 cm and soap dish

Chrome 27764000 63.30

Quick Clean

- consists of: hand shower, shower bar, shower hose, slider, soap dish
- shower head size: 85 mm
- spray type: normal spray, Vario spray
- spray type adjustment by turning spray disc
- without pivot joints
- 90° position adjustable slider, pivots left and right, up and down
- maximum flow rate at 3 bar: 17 l/min
- wall supports of plastic

Consisting of:
- **Crometta 85** Hand shower Vario (# 28562000)
- **Unica** Shower bar Crometta 65 cm with shower hose (# 27615000)
- **Casetta** Soap dish S (# 28684000)

Optional parts:
- Wall bar spacer — Chrome 97450000 8.10

Measurements within scale drawings are in mm.

Technical specifications and units of measure are subject to change.

	finish	code no.	Euro

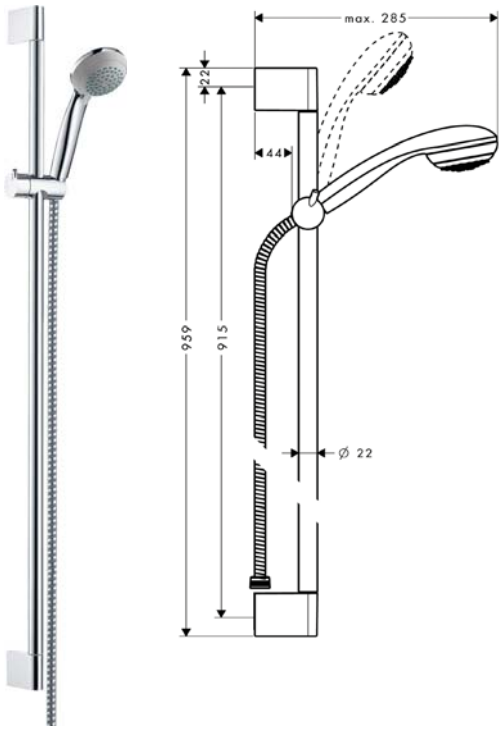

Crometta 85 Shower set Mono with shower bar 90 cm — Chrome — 27729000 — 59.60

Quick Clean

- consists of: hand shower, shower bar, shower hose, slider
- shower head size: 85 mm
- spray type: normal spray
- without pivot joints
- 90° position adjustable slider, pivots left and right, up and down
- maximum flow rate at 3 bar: 16 l/min
- wall supports of plastic

Consisting of:
- **Crometta 85** Hand shower Mono (# 28585000)
- **Unica** Shower bar Crometta 90 cm with shower hose (# 27614000)

Alternative sizes:
- **Crometta 85** Shower set Mono with shower bar 65 cm — Chrome — 27728000 — 56.50

Optional parts:
- Wall bar spacer — Chrome — 97450000 — 8.10
- **Casetta** Soap dish C — Chrome — 28678000 — 14.70

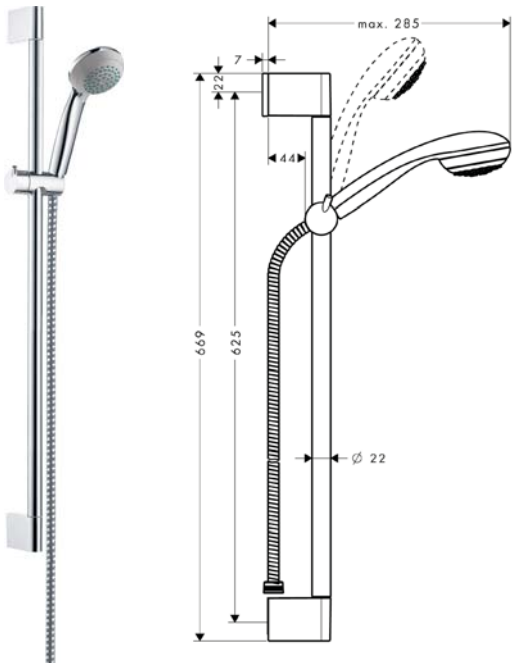

Crometta 85 Shower set Mono Green 6 l/min with shower bar 65 cm — Chrome — 27652000 — 65.10

Air Power · Eco Smart · Quick Clean

- consists of: hand shower, shower bar, shower hose, slider
- shower head size: 85 mm
- spray type: normal spray
- without pivot joints
- 90° position adjustable slider, pivots left and right, up and down
- maximum flow rate at 3 bar: 6 l/min
- wall supports of plastic

Consisting of:
- **Crometta 85** Hand shower Mono Green 6 l/min (# 28561000)
- **Unica** Shower bar Crometta 65 cm with shower hose (# 27615000)

Optional parts:
- **Casetta** Soap dish C — Chrome — 28678000 — 14.70
- Wall bar spacer — Chrome — 97450000 — 8.10

Measurements within scale drawings are in mm.

Technical specifications and units of measure are subject to change.

Raindance Select E shower sets with thermostatic mixer for exposed installation



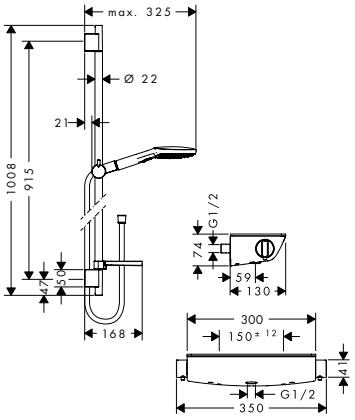

	finish	code no.	Euro
Raindance Select E Shower system for exposed installation 120 with Ecostat Select thermostat and shower bar 90 cm	Chrome White/Chrome	27039000 27039400	475.70 475.70
· consists of: hand shower, shower thermostat, shower bar, slider, soap dish, shower hose · spray type overhead shower: Rain, RainAir, Whirl · convenient diversion via Select button · pivot connector prevent hose from tangling · 90° position adjustable slider, pivots left and right, up and down · CoolContact thermostat: Prevents the housing from heating up, making showering even safer · maximum flow rate at 3 bar: 15 l/min · in case of installation on existing G ¾ connections, adaptor # 02026000 must be used			
Consisting of: · **Ecostat Select** Shower thermostat for exposed installation (# 13161XXX) · **Raindance Select E** Shower set 120 3jet with shower bar 90 cm and soap dish (# 26621XXX)			
Alternative sizes: · **Raindance Select E** Shower system for exposed installation 120 with Ecostat Select thermostat and shower bar 65 cm	Chrome White/Chrome	27038000 27038400	468.40 468.40
Optional parts: · S-connections adapter G ¾ for renovation	Chrome	02026000	30.10

Raindance Select S shower sets with thermostatic mixer for exposed installation



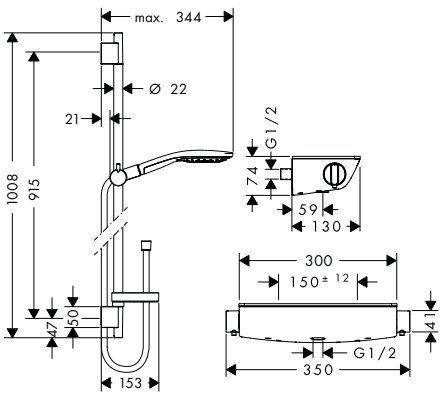

	finish	code no.	Euro
Raindance Select S Shower system for exposed installation 150 with Ecostat Select thermostat and shower bar 90 cm	Chrome White/Chrome	27037000 27037400	522.50 522.50
· consists of: hand shower, shower thermostat, shower bar, slider, soap dish, shower hose · spray type overhead shower: RainAir, CaresseAir, Mix · convenient diversion via Select button · pivot connector prevent hose from tangling · 90° position adjustable slider, pivots left and right, up and down · CoolContact thermostat: Prevents the housing from heating up, making showering even safer · maximum flow rate at 3 bar: 16 l/min · in case of installation on existing G ¾ connections, adaptor # 02026000 must be used			
Consisting of: · **Ecostat Select** Shower thermostat for exposed installation (# 13161XXX) · **Raindance Select S** Shower set 150 3jet with shower bar 90 cm and soap dish (# 27803XXX)			
Alternative sizes: · **Raindance Select S** Shower system for exposed installation 150 with Ecostat Select thermostat and shower bar 65 cm	Chrome White/Chrome	27036000 27036400	515.10 515.10
Optional parts: · S-connections adapter G ¾ for renovation	Chrome	02026000	30.10

Measurements within scale drawings are in mm.

Technical specifications and units of measure are subject to change.

Croma Select E shower sets with thermostatic mixer for exposed installation



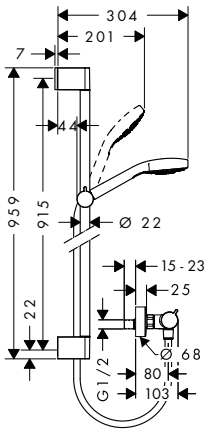

	finish	code no.	Euro
Croma Select E Shower system for exposed installation Vario with Ecostat Comfort thermostat and shower bar 90 cm	White/Chrome	27082400	275.90

Select · Eco Smart · Quick Clean · XXL Performance

- consists of: hand shower, shower thermostat, shower bar, slider, shower hose
- spray type overhead shower: Rain, TurboRain, IntenseRain
- convenient diversion via Select button
- pivot connector prevent hose from tangling
- slide inclination angle can be adjusted by 45°
- maximum flow rate at 3 bar: 15 l/min

Consisting of:
- **Croma Select E** Shower set Vario with shower bar 90 cm (# 26592400)
- **Ecostat** Shower thermostat Comfort for exposed installation (# 13116XXX)

Alternative sizes:

Croma Select E Shower system for exposed installation Vario with Ecostat Comfort thermostat and shower bar 65 cm	White/Chrome	27081400	270.20

Croma Select S shower sets with thermostatic mixer for exposed installation



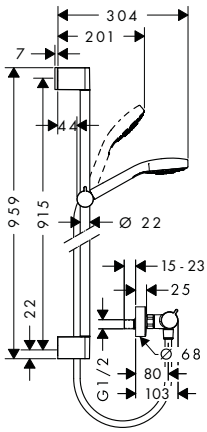

	finish	code no.	Euro
Croma Select S Shower system for exposed installation Vario with Ecostat Comfort thermostat and shower bar 90 cm	White/Chrome	27014400	275.90

Select · Quick Clean · XXL Performance

- consists of: hand shower, shower thermostat, shower bar, slider, shower hose
- spray type overhead shower: Rain, TurboRain, IntenseRain
- convenient diversion via Select button
- pivot connector prevent hose from tangling
- slide inclination angle can be adjusted by 45°
- maximum flow rate at 3 bar: 15 l/min

Consisting of:
- **Croma Select S** Shower set Vario with shower bar 90 cm (# 26572400)
- **Ecostat** Shower thermostat Comfort for exposed installation (# 13116XXX)

Alternative sizes:

Croma Select S Shower system for exposed installation Vario with Ecostat Comfort thermostat and shower bar 65 cm	White/Chrome	27013400	270.20

	finish	code no.	Euro



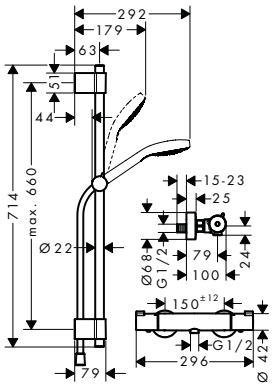

Croma Select S Shower system for exposed installation Vario with Ecostat 1001 CL thermostat and shower bar 72 cm

White/Chrome | 27833400 | 232.20

- consists of: hand shower, shower thermostat, shower bar, slider, shower hose
- spray type overhead shower: Rain, IntenseRain, TurboRain
- convenient diversion via Select button
- pivot connector prevent hose from tangling
- 90° position adjustable slider, pivots left and right, up and down
- maximum flow rate at 3 bar: 9 l/min
- variable drilling hole distance: 400 - 660 mm
- wall supports of plastic

Consisting of:
- **Ecostat** Shower thermostat 1001 CL for exposed installation (# 13211000)
- **Croma Select S** Hand shower Vario (# 26802400)
- **Unica** Shower bar Varia 72 cm (# 27355000)
- **Comfortflex** Shower hose 160 cm (# 28168000)

Croma 100 shower sets with thermostatic mixer for exposed installation



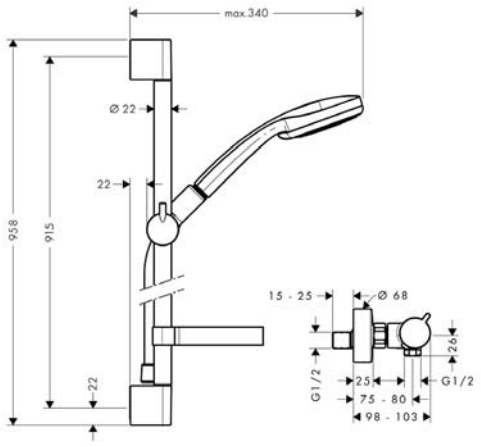

Croma 100 Shower system for exposed installation Vario with Ecostat Comfort thermostat and shower bar 90 cm

Chrome | 27035000 | 312.40

- consists of: hand shower, shower thermostat, shower bar, slider, soap dish, shower hose
- spray type overhead shower: normal spray, Rain, Massage spray, Shampoo spray
- spray type adjustment by turning spray disc
- pivot connector prevent hose from tangling
- 90° position adjustable slider, pivots left and right, up and down
- maximum flow rate at 3 bar: 18 l/min

Consisting of:
- **Croma 100** Shower set Vario with shower bar 90 cm and soap dish (# 27771000)
- **Ecostat** Shower thermostat Comfort for exposed installation (# 13116XXX)

Alternative sizes:
- **Croma 100** Shower system for exposed installation Vario with Ecostat Comfort thermostat and shower bar 65 cm — Chrome | 27034000 | 305.70

Water saving EcoSmart version:
- **Croma 100** Shower system for exposed installation Vario EcoSmart 9 l/min with Ecostat Comfort thermostat and shower bar 90 cm — Chrome | 27033000 | 317.80

Optional parts:
- Wall bar spacer — Chrome | 97450000 | 8.10

Measurements within scale drawings are in mm.

Technical specifications and units of measure are subject to change.

	finish	code no.	Euro



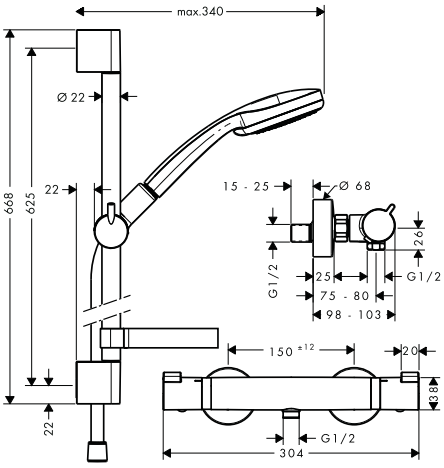

Croma 100 Shower system for exposed installation Vario with Ecostat Comfort thermostat and shower bar 65 cm

Chrome	27034000	305.70

- consists of: hand shower, shower thermostat, shower bar, slider, soap dish, shower hose
- spray type overhead shower: normal spray, Rain, Massage spray, Shampoo spray
- spray type adjustment by turning spray disc
- pivot connector prevent hose from tangling
- 90° position adjustable slider, pivots left and right, up and down
- maximum flow rate at 3 bar: 18 l/min

Consisting of:
- **Croma 100** Shower set Vario with shower bar 65 cm and soap dish (# 27772000)
- **Ecostat** Shower thermostat Comfort for exposed installation (# 13116XXX)

Water saving EcoSmart version:

Chrome	27032000	311.10

- **Croma 100** Shower system for exposed installation Vario EcoSmart 9 l/min with Ecostat Comfort thermostat and shower bar 65 cm



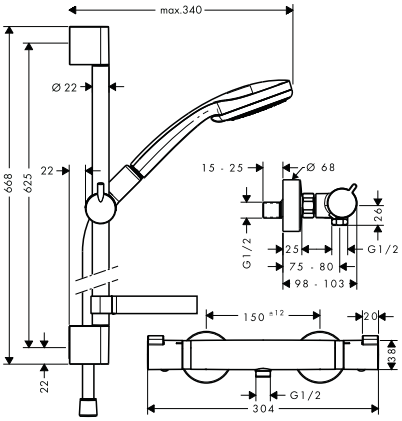

Croma 100 Shower system for exposed installation Multi with Ecostat Comfort thermostat and shower bar 90 cm

Chrome	27085000	334.50

- consists of: hand shower, shower thermostat, shower bar, slider, soap dish, shower hose
- spray type overhead shower: Rain, MonoRain, Massage spray
- spray type adjustment by turning spray disc
- pivot connector prevent hose from tangling
- 90° position adjustable slider, pivots left and right, up and down
- maximum flow rate at 3 bar: 17 l/min

Consisting of:
- **Croma 100** Shower set Multi with shower bar 90 cm and soap dish (# 27774000)
- **Ecostat** Shower thermostat Comfort for exposed installation (# 13116XXX)

Alternative sizes:

Chrome	27086000	312.00

- **Croma 100** Shower system for exposed installation Multi with Ecostat Comfort thermostat and shower bar 65 cm

Optional parts:

Chrome	97450000	8.10

- Wall bar spacer

Measurements within scale drawings are in mm.

Technical specifications and units of measure are subject to change.

Crometta 100 shower sets with thermostatic mixer for exposed installation



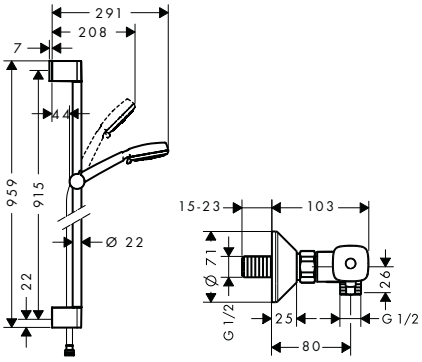

	finish	code no.	Euro
Crometta 100 Shower system for exposed installation Vario with Ecostat universal thermostat and shower bar 90 cm · consists of: hand shower, shower thermostat, shower bar, slider, shower hose · spray type overhead shower: Rain, normal spray, Shampoo spray, Massage spray · spray type adjustment by turning spray disc · pivot connector prevent hose from tangling · 90° position adjustable slider, pivots left and right, up and down · maximum flow rate at 3 bar: 16 l/min	White/Chrome	27031400	232.70
Consisting of: · **Crometta 100** Shower set Vario with shower bar 90 cm (# 26657400) · **Ecostat** Shower thermostat universal for exposed installation (# 13122000)			
Alternative sizes: · **Crometta 100** Shower system for exposed installation Vario with Ecostat universal thermostat and shower bar 65 cm	White/Chrome	27030400	226.90
Optional parts: · Wall bar spacer	Chrome	97450000	8.10

Crometta shower sets with thermostatic mixer for exposed installation



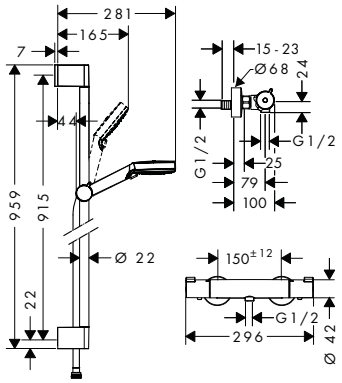

	finish	code no.	Euro
Crometta Shower system for exposed installation Vario with Ecostat 1001 CL thermostat and shower bar 90 cm · consists of: hand shower, shower thermostat, shower bar, slider, shower hose · spray type overhead shower: Rain, IntenseRain · spray type adjustment by turning spray disc · pivot connector prevent hose from tangling · 90° position adjustable slider, pivots left and right, up and down · maximum flow rate at 3 bar: 14 l/min	White/Chrome	27813400	212.60
Consisting of: · **Crometta** Shower set Vario with shower bar 90 cm (# 26536400) · **Ecostat** Shower thermostat 1001 CL for exposed installation (# 13211000)			
Alternative sizes: · **Crometta** Shower system for exposed installation Vario with Ecostat 1001 CL thermostat and shower bar 65 cm	White/Chrome	27812400	203.70

Measurements within scale drawings are in mm.

Technical specifications and units of measure are subject to change.

Unica'E wall bars

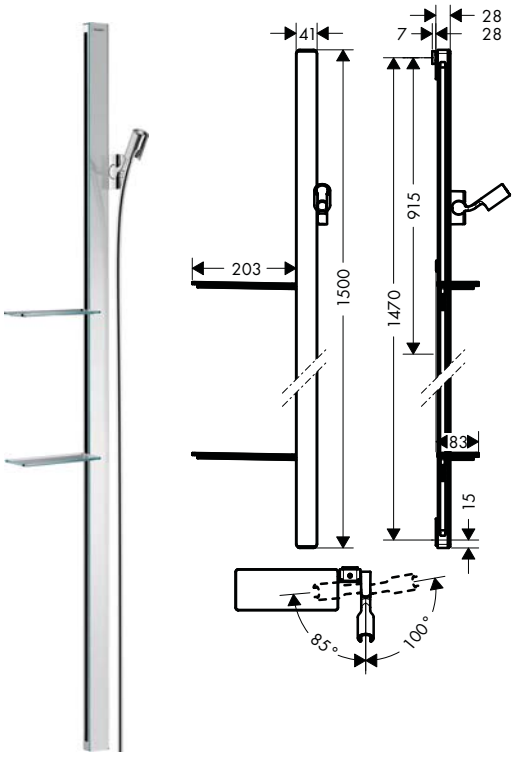

	finish	code no.	Euro
Unica Shower bar E 150 cm with shower hose	Chrome	27645000	405.60
	White/Chrome	27645400	405.60
	Black/Chrome	27645600	405.60

- consists of: shower bar, shower hose, slider, soap dishes
- pivot connector prevent hose from tangling
- hose nut: for shower hoses with conical nut on both sides
- 90° position adjustable slider, pivots left and right, up and down
- shelf made of safety glass
- wall bar type: flat aluminium profile with safety glass finish
- bar width: 41 mm
- self-locking slide
- slide inclination angle steplessly adjustable
- wall supports of plastic
- finish: chrome, white or black

Consisting of:
- **Isiflex** Shower hose 160 cm (# 28276XXX)
- **Casetta** Soap dish/ shelf E (# 26511XXX)

Alternative sizes:

· **Unica** Shower bar E 90 cm with shower hose	Chrome	27640000	298.80
	White/Chrome	27640400	298.80
	Black/Chrome	27640600	298.80

Optional parts:

· **Casetta** Soap dish/ shelf E	Chrome	26511000	64.00
	White/Chrome	26511400	64.00
	Black/Chrome	26511600	64.00

Avantgarde style wall bars

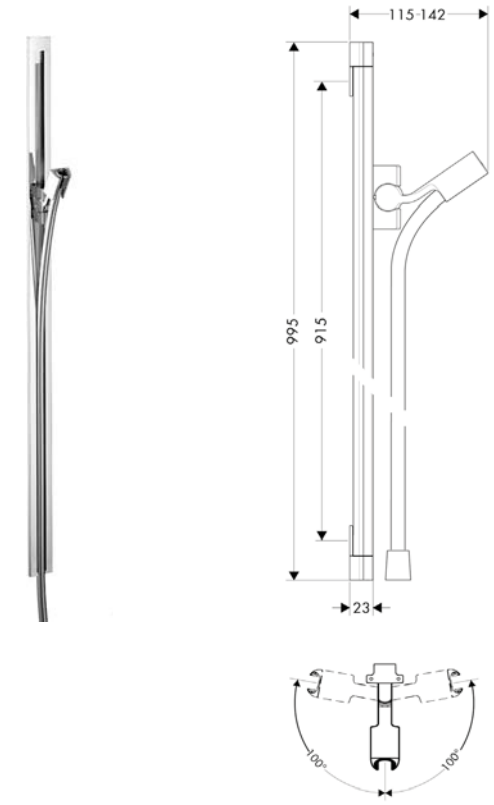

Unica Shower bar PuraVida 90 cm with shower hose	Chrome	27844000	275.30

- consists of: shower bar, shower hose, slider
- wall bar type: flat and slim aluminium profile
- metal shower slide
- self-locking slide
- slide inclination angle steplessly adjustable
- silent inclination angle adjustment

Consisting of:
- **Isiflex** Shower hose 160 cm (# 28276XXX)

Optional parts:

· **Raindance** Corner fitting set		28694000	32.70
· **Casetta** Soap dishes Raindance	Chrome	28698000	73.80
· **Raindance** Wall bar spacer	Chrome	98993000	7.60

Measurements within scale drawings are in mm.

Technical specifications and units of measure are subject to change.

Modern style wall bars

	finish	code no.	Euro
Unica Shower bar Raindance 90 cm with shower hose	Chrome	27636000	267.90



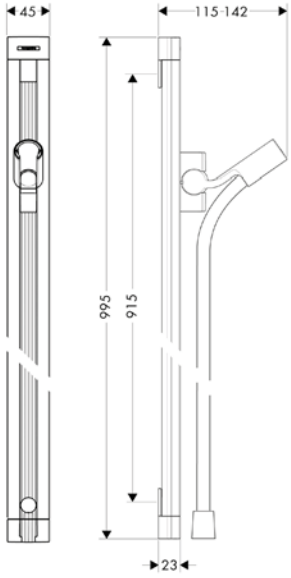

- consists of: shower bar, shower hose, slider
- wall bar type: flat and slim aluminium profile
- bar width: 45 mm
- metal shower slide
- self-locking slide
- slide inclination angle steplessly adjustable
- silent inclination angle adjustment

Consisting of:
- **Isiflex** Shower hose 160 cm (# 28276XXX)

Optional parts:

· **Raindance** Corner fitting set		28694000	32.70
· **Casetta** Soap dishes Raindance	Chrome	28698000	73.80
· **Raindance** Wall bar spacer	Chrome	98993000	7.60

Raindance Corner fitting set — 28694000 — 32.70



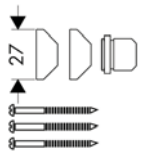

- material: plastic

Raindance Wall bar spacer — Chrome — 98993000 — 7.60



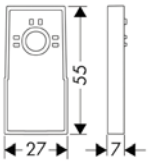

- also usable as an extension
- material: plastic

Measurements within scale drawings are in mm.

Technical specifications and units of measure are subject to change.

	finish	code no.	Euro



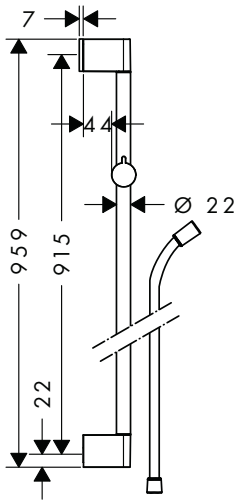

Unica Shower bar Croma 90 cm with shower hose — Chrome — 26504000 — 69.30

- consists of: shower bar, shower hose, slider
- slide inclination angle can be adjusted by 45°
- bar width: brass pipe with a bar calibre of 22 mm
- slide with locking mechanism
- slide inclination angle adjustable in 2 steps
- silent inclination angle adjustment
- wall supports of plastic

Consisting of:
- **Isiflex** Shower hose 160 cm (# 28276XXX)

Alternative sizes:
- **Unica** Shower bar Croma 65 cm with shower hose — Chrome — 26503000 — 63.40

Alternative products:
- **Unica** Shower bar Croma 90 cm — Chrome — 26506000 — 51.60

Optional parts:
- Wall bar spacer — Chrome — 97450000 — 8.10



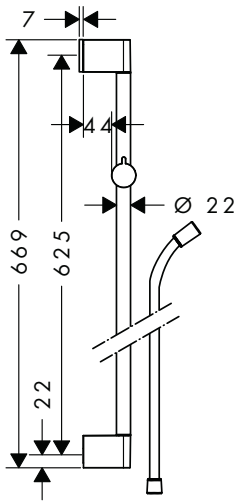

Unica Shower bar Croma 65 cm with shower hose — Chrome — 26503000 — 63.40

- consists of: shower bar, shower hose, slider
- slide inclination angle can be adjusted by 45°
- bar width: brass pipe with a bar calibre of 22 mm
- slide with locking mechanism
- slide inclination angle adjustable in 2 steps
- silent inclination angle adjustment
- wall supports of plastic

Consisting of:
- **Isiflex** Shower hose 160 cm (# 28276XXX)

Alternative sizes:
- **Unica** Shower bar Croma 90 cm with shower hose — Chrome — 26504000 — 69.30

Alternative products:
- **Unica** Shower bar Croma 65 cm — Chrome — 26505000 — 45.80

Optional parts:
- Wall bar spacer — Chrome — 97450000 — 8.10

Measurements within scale drawings are in mm.

Technical specifications and units of measure are subject to change.

	finish	code no.	Euro



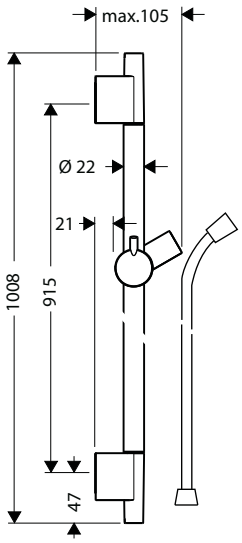

Unica Shower bar S Puro 90 cm with shower hose

- consists of: shower bar, shower hose, slider
- bar width: brass pipe with a bar calibre of 22 mm
- metal shower slide
- slide with locking mechanism
- slide inclination angle steplessly adjustable
- inclination angle adjustable via raster

Consisting of:
- **Isiflex** Shower hose 160 cm (# 28276XXX)

	finish	code no.	Euro
	Chrome	28631000	120.60
	Brushed Bronze	28631140	180.90
	Brushed Black Chrome	28631340	180.90
	Matt Black	28631670	168.80
	Matt White	28631700	168.80
	Brushed Nickel	28631820	180.90
	Polished Gold Optic	28631990	180.90

Alternative sizes:

· **Unica** Shower bar S Puro 65 cm with shower hose	Chrome	28632000	112.60
	Brushed Bronze	28632140	168.90
	Brushed Black Chrome	28632340	168.90
	Matt Black	28632670	157.60
	Matt White	28632700	157.60
	Polished Gold Optic	28632990	168.90

Optional parts:

· **Casetta** Soap dish S Puro	Chrome	28679000	36.10
· **Casetta** Soap dishes Unica 88	Transparent	28675000	26.40
· Wall bar spacer	Chrome	97450000	8.10



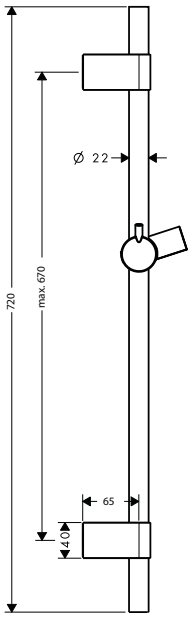

Unica Shower bar S Puro Reno 72 cm

- consists of: shower bar, slider
- bar width: brass pipe with a bar calibre of 22 mm
- slide with locking mechanism
- slide inclination angle steplessly adjustable
- inclination angle adjustable via raster
- variable wall support

	finish	code no.	Euro
	Chrome	28662000	112.90

Alternative sizes:

· **Unica** Shower bar S Puro Reno 105 cm	Chrome	28663000	118.90



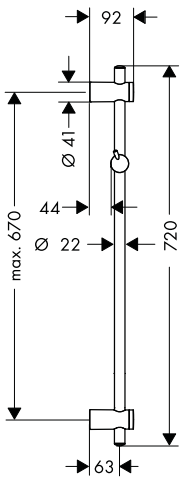

Unica Shower bar Reno 72 cm

- consists of: shower bar, slider
- bar width: brass pipe with a bar calibre of 22 mm
- variable drilling hole distance: 400 - 670 mm
- slide with locking mechanism
- slide inclination angle adjustable in 2 steps
- wall supports of plastic
- variable wall support

	finish	code no.	Euro
	Chrome	27704000	68.50

Measurements within scale drawings are in mm.

Technical specifications and units of measure are subject to change.

	finish	code no.	Euro



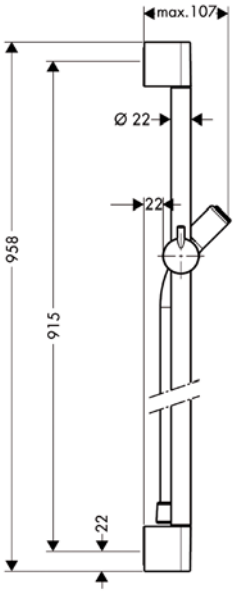

Unica Shower bar C 90 cm with shower hose — Chrome — 27610000 — 81.00

- consists of: shower bar, shower hose, slider
- bar width: brass pipe with a bar calibre of 22 mm
- translucent plastic shower slide
- slide with locking mechanism
- slide inclination angle steplessly adjustable
- inclination angle adjustable via raster

Consisting of:
- **Isiflex** Shower hose 160 cm (# 28276XXX)

Alternative sizes:
- **Unica** Shower bar C 65 cm with shower hose — Chrome — 27611000 — 72.30

Optional parts:
- **Casetta** Soap dish C — Chrome — 28678000 — 14.70
- Wall bar spacer — Chrome — 97450000 — 8.10



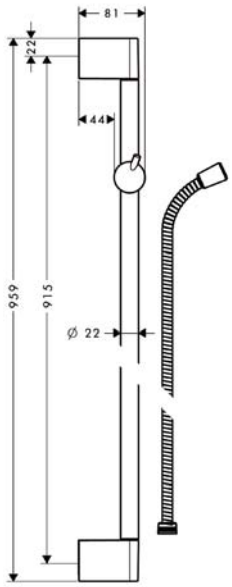

Unica Shower bar Crometta 90 cm with shower hose — Chrome — 27614000 — 55.90

- consists of: shower bar, shower hose, slider
- bar width: brass pipe with a bar calibre of 22 mm
- slide with locking mechanism
- slide inclination angle adjustable in 2 steps
- silent inclination angle adjustment

Consisting of:
- **Metaflex** Shower hose 160 cm (# 28266000)

Alternative sizes:
- **Unica** Shower bar Crometta 65 cm with shower hose — Chrome — 27615000 — 52.80

Alternative products:
- **Unica** Shower bar Crometta 90 cm — Chrome — 27609000 — 50.20

Optional parts:
- **Casetta** Soap dish C — Chrome — 28678000 — 14.70
- Wall bar spacer — Chrome — 97450000 — 8.10



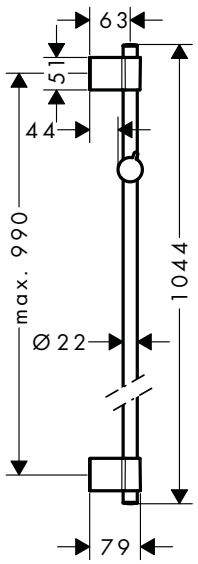

Unica Shower bar Varia 105 cm — Chrome — 27356000 — 57.80

- consists of: shower bar, slider
- bar width: brass pipe with a bar calibre of 22 mm
- variable drilling hole distance: 400 mm - 970 mm
- slide inclination angle adjustable in 2 steps
- silent inclination angle adjustment
- wall supports of plastic
- variable wall support

Alternative sizes:
- **Unica** Shower bar Varia 72 cm — Chrome — 27355000 — 52.30

Measurements within scale drawings are in mm.

Technical specifications and units of measure are subject to change.

	finish	code no.	Euro
Wall bar spacer · material: plastic	Chrome	97450000	8.10



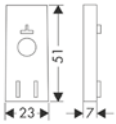

Unica Comfort wall bars



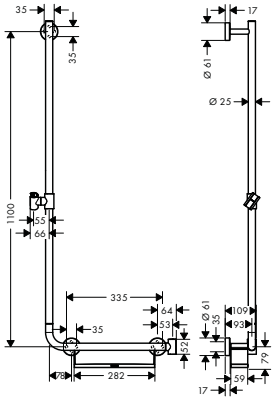

Unica Shower bar Comfort 110 cm left · consists of: shower bar, shelf, slider · infinitely height-adjustable · shower holder can be removed · 90° position adjustable slider, pivots left and right, up and down · shelf made of plastic, finish white, shelf can be removed for cleaning · bar width: 25 mm · metal shower slide · wall supports of metal	White/Chrome	26403400	297.40
Alternative products:			
· **Unica** Shower bar Comfort 110 cm right	White/Chrome	26404400	297.40
Optional parts:			
· **Unica** Foot support Comfort	Chrome	26329000	143.20



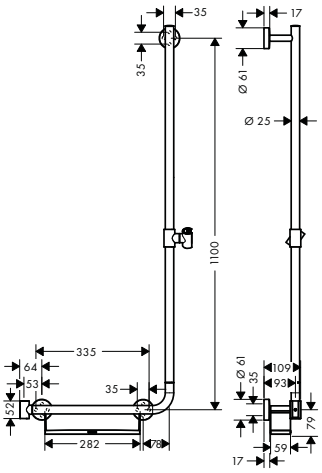

Unica Shower bar Comfort 110 cm right · consists of: shower bar, shelf, slider · infinitely height-adjustable · shower holder can be removed · 90° position adjustable slider, pivots left and right, up and down · shelf can be removed for cleaning · bar width: 25 mm · metal shower slide · slide with locking mechanism · wall supports of metal	White/Chrome	26404400	297.40
Alternative products:			
· **Unica** Shower bar Comfort 110 cm left	White/Chrome	26403400	297.40
Optional parts:			
· **Unica** Foot support Comfort	Chrome	26329000	143.20



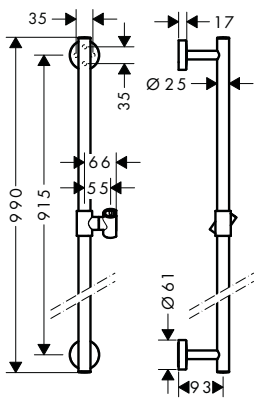

Unica Shower bar Comfort 90 cm · consists of: shower bar, slider · infinitely height-adjustable · 90° position adjustable slider, pivots left and right, up and down · bar width: 25 mm · metal shower slide · wall supports of metal	Chrome	26402000	187.20
Alternative sizes:			
· **Unica** Shower bar Comfort 65 cm	Chrome	26401000	176.30
Optional parts:			
· **Unica** Grab handle Comfort with shelf and shower holder	White/Chrome	26328400	139.60
· **Unica** Foot support Comfort	Chrome	26329000	143.20

Measurements within scale drawings are in mm.

Technical specifications and units of measure are subject to change.

Classic style wall bars

	finish	code no.	Euro
Unica Shower bar Classic 65 cm with shower hose · consists of: shower bar, shower hose, slider · bar width: brass pipe with a bar calibre of 22 mm · metal shower slide · slide with locking mechanism · slide inclination angle steplessly adjustable · inclination angle adjustable via raster **Consisting of:** · **Sensoflex** Metal shower hose 160 cm (# 28136000)	Chrome Brushed Nickel	27617000 27617820	162.30 243.40
Optional parts: · **Casetta** Soap dish C	Chrome	28678000	14.70
Wall bar spacer for Unica wall bar S · material: plastic	Chrome	96184000	7.60
Casetta Soap dish C · for shower bars with Ø 22 mm · removable	Chrome	28678000	14.70
Casetta Soap dish E · material: plastic · for shower bars with Ø 18 / 22 / 25 mm	Chrome	26519000	18.60
Casetta Soap dish S Puro · for shower bars with Ø 22 mm · material: plastic · removable	Chrome	28679000	36.10

Measurements within scale drawings are in mm.

Technical specifications and units of measure are subject to change.

Rainfinity shower holder sets



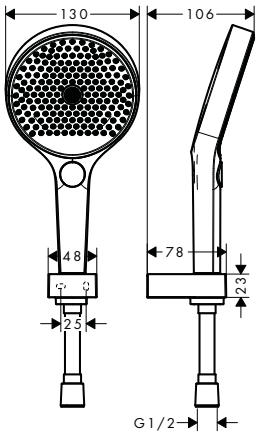

	finish	code no.	Euro
Rainfinity Shower holder set 130 3jet with shower hose 125 cm	Chrome	26852000	155.00
	Matt White	26852700	201.50

Select · Quick Clean · XXL Performance

- consists of: hand shower, shower holder, shower hose
- shower head size: 130 mm
- spray type: PowderRain, Intense PowderRain, MonoRain
- convenient diversion via Select button
- maximum flow rate at 3 bar: 14 l/min
- pivot connector prevent hose from tangling
- wall mounting: screw fastening

Consisting of:
- **Rainfinity** Hand shower 130 3jet (# 26864XXX)
- **Isiflex** Shower hose 125 cm (# 28272XXX)
- Shower holder Porter E (# 28387XXX)

Alternative sizes:

Rainfinity Shower holder set 130 3jet with shower hose 160 cm	Chrome	26851000	157.00
	Matt White	26851700	204.10



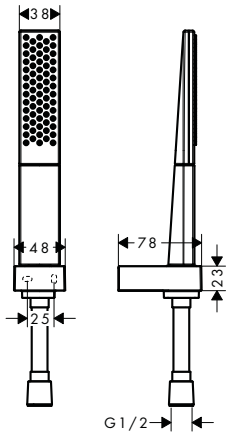

Rainfinity Shower holder set 100 1jet with shower hose 125 cm	Chrome	26857000	139.80
	Matt White	26857700	181.70

Quick Clean

- consists of: baton hand shower, shower holder, shower hose
- shower head size: 100 mm
- spray type: PowderRain
- maximum flow rate at 3 bar: 14 l/min
- pivot connector prevent hose from tangling
- wall mounting: screw fastening

Consisting of:
- **Rainfinity** Baton hand shower 100 1jet (# 26866XXX)
- **Isiflex** Shower hose 125 cm (# 28272XXX)
- Shower holder Porter E (# 28387XXX)

Alternative sizes:

Rainfinity Shower holder set 100 1jet with shower hose 160 cm	Chrome	26856000	141.80
	Matt White	26856700	184.40

Raindance Select E shower holder sets



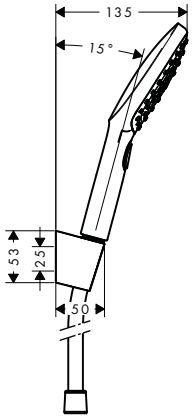

Raindance Select E Shower holder set 120 3jet with shower hose 160 cm	Chrome	26720000	118.40
	White/Chrome	26720400	118.40

Select · Air Power · Quick Clean · XXL Performance

- consists of: hand shower, shower holder, shower hose
- shower head size: 120 mm
- spray type: RainAir, Rain, Whirl
- convenient diversion via Select button
- maximum flow rate at 3 bar: 15 l/min
- pivot connector prevent hose from tangling
- wall supports of plastic

Consisting of:
- **Raindance Select E** Hand shower 120 3jet (# 26520XXX)
- Shower holder Porter S (# 28331XXX)
- **Isiflex** Shower hose 160 cm (# 28276XXX)

Alternative sizes:

Raindance Select E Shower holder set 120 3jet with shower hose 125 cm	Chrome	26700000	116.40
	White/Chrome	26700400	116.40

Measurements within scale drawings are in mm.

Technical specifications and units of measure are subject to change.

Raindance Select S shower holder sets

	finish	code no.	Euro



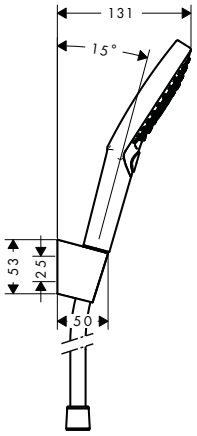

Raindance Select S Shower holder set 120 3jet PowderRain with shower hose 125 cm

- consists of: hand shower, shower holder, shower hose
- shower head size: 125 mm
- spray type: PowderRain, Rain, Whirl
- convenient diversion via Select button
- maximum flow rate at 3 bar: 12 l/ min
- pivot connector prevent hose from tangling
- wall supports of plastic

Consisting of:
- Shower holder Porter S (# 28331XXX)
- **Raindance Select S** Hand shower 120 3jet PowderRain (# 26014000)
- **Isiflex** Shower hose 125 cm (# 28272XXX)

	finish	code no.	Euro
	Chrome	27669000	119.30

Alternative sizes:

	finish	code no.	Euro
Raindance Select S Shower holder set 120 3jet PowderRain with shower hose 160 cm	Chrome	27668000	121.40



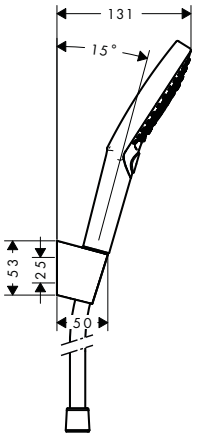

Raindance Select S Shower holder set 120 3jet with shower hose 160 cm

- consists of: hand shower, shower holder, shower hose
- shower head size: 125 mm
- spray type: RainAir, Rain, Whirl
- convenient diversion via Select button
- maximum flow rate at 3 bar: 15 l/ min
- pivot connector prevent hose from tangling
- wall supports of plastic

Consisting of:
- **Raindance Select S** Hand shower 120 3jet (# 26530XXX)
- Shower holder Porter S (# 28331XXX)
- **Isiflex** Shower hose 160 cm (# 28276XXX)

	finish	code no.	Euro
	Chrome	26721000	118.40
	White/Chrome	26721400	118.40

Alternative sizes:

	finish	code no.	Euro
Raindance Select S Shower holder set 120 3jet with shower hose 125 cm	Chrome	26701000	116.40
	White/Chrome	26701400	116.40

Croma Select E shower holder sets



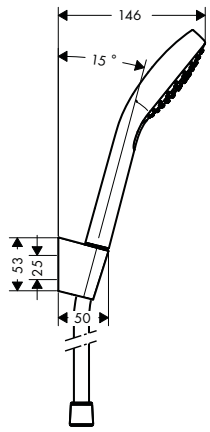

Croma Select E Shower holder set Vario with shower hose 125 cm

- consists of: hand shower, shower holder, shower hose
- shower head size: 110 mm
- spray type: Rain, IntenseRain, TurboRain
- convenient diversion via Select button
- maximum flow rate at 3 bar: 15 l/ min
- pivot connector prevent hose from tangling
- wall supports of plastic

Consisting of:
- **Croma Select E** Hand shower Vario (# 26812400)
- Shower holder Porter S (# 28331XXX)
- **Isiflex** Shower hose 125 cm (# 28272XXX)

	finish	code no.	Euro
	White/Chrome	26425400	70.50

Alternative sizes:

	finish	code no.	Euro
Croma Select E Shower holder set Vario with shower hose 160 cm	White/Chrome	26413400	74.10

Measurements within scale drawings are in mm.

Technical specifications and units of measure are subject to change.

	finish	code no.	Euro



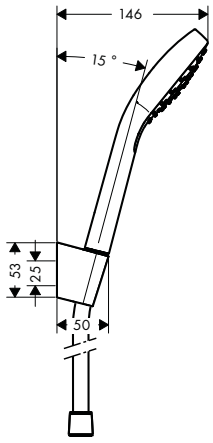

Croma Select E Shower holder set 1jet with shower hose 125 cm — White/Chrome — 26424400 — 58.90

Quick Clean · XXL Performance

- consists of: hand shower, shower holder, shower hose
- shower head size: 110 mm
- spray type: Rain
- maximum flow rate at 3 bar: 16 l/ min
- pivot connector prevent hose from tangling
- wall supports of plastic

Consisting of:
- **Croma Select E** Hand shower 1jet (# 26814400)
- Shower holder Porter S (# 28331XXX)
- **Isiflex** Shower hose 125 cm (# 28272XXX)

Alternative sizes:
- **Croma Select E** Shower holder set 1jet with shower hose 160 cm — White/Chrome — 26412400 — 62.20

Croma Select S shower holder sets



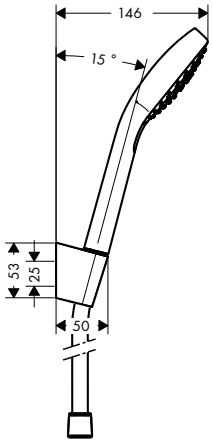

Croma Select S Shower holder set Vario with shower hose 125 cm — White/Chrome — 26421400 — 70.50

Select · Quick Clean · XXL Performance

- consists of: hand shower, shower holder, shower hose
- shower head size: 110 mm
- spray type: Rain, IntenseRain, TurboRain
- convenient diversion via Select button
- maximum flow rate at 3 bar: 15 l/ min
- pivot connector prevent hose from tangling
- wall supports of plastic

Consisting of:
- **Croma Select S** Hand shower Vario (# 26802400)
- Shower holder Porter S (# 28331XXX)
- **Isiflex** Shower hose 125 cm (# 28272XXX)

Alternative sizes:
- **Croma Select S** Shower holder set Vario with shower hose 160 cm — White/Chrome — 26411400 — 74.10



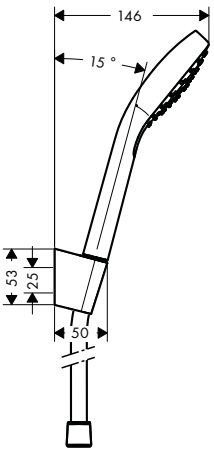

Croma Select S Shower holder set 1jet with shower hose 125 cm — White/Chrome — 26420400 — 58.90

Quick Clean · XXL Performance

- consists of: hand shower, shower holder, shower hose
- shower head size: 110 mm
- spray type: Rain
- maximum flow rate at 3 bar: 16 l/ min
- pivot connector prevent hose from tangling
- wall supports of plastic

Consisting of:
- **Croma Select S** Hand shower 1jet (# 26804400)
- Shower holder Porter S (# 28331XXX)
- **Isiflex** Shower hose 125 cm (# 28272XXX)

Alternative sizes:
- **Croma Select S** Shower holder set 1jet with shower hose 160 cm — White/Chrome — 26410400 — 62.20

Measurements within scale drawings are in mm.

Technical specifications and units of measure are subject to change.

Croma 100 shower holder sets

	finish	code no.	Euro



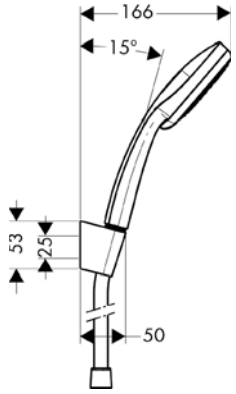

Croma 100 Shower holder set Multi with shower hose 125 cm

- consists of: hand shower, shower holder, shower hose
- shower head size: 100 mm
- spray type: MonoRain, Massage spray, Rain
- spray type adjustment by turning spray disc
- maximum flow rate at 3 bar: 19 l/min
- pivot connector prevent hose from tangling
- wall supports of plastic

Consisting of:
- **Croma 100** Hand shower Multi (# 28536XXX)
- Shower holder Porter S (# 28331XXX)
- **Isiflex** Shower hose 125 cm (# 28272XXX)

	Chrome	27593000	87.50
Alternative sizes:			
· **Croma 100** Shower holder set Multi with shower hose 160 cm	Chrome	27595000	93.50



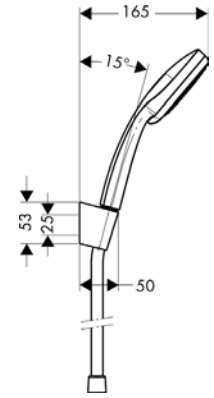

Croma 100 Shower holder set Vario with shower hose 125 cm

- consists of: hand shower, shower holder, shower hose
- shower head size: 100 mm
- spray type: Rain, normal spray, Shampoo spray, Massage spray
- spray type adjustment by turning spray disc
- maximum flow rate at 3 bar: 18 l/min
- pivot connector prevent hose from tangling
- wall supports of plastic

Consisting of:
- **Croma 100** Hand shower Vario (# 28535000)
- Shower holder Porter S (# 28331XXX)
- **Isiflex** Shower hose 125 cm (# 28272XXX)

	Chrome	27592000	62.90
Alternative sizes:			
· **Croma 100** Shower holder set Vario with shower hose 160 cm	Chrome	27594000	65.30



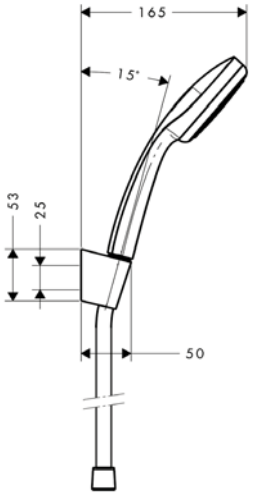

Croma 100 Shower holder set Mono with shower hose 125 cm

- consists of: hand shower, shower holder, shower hose
- shower head size: 100 mm
- spray type: Rain
- maximum flow rate at 3 bar: 16 l/min
- pivot connector prevent hose from tangling
- wall supports of plastic

Consisting of:
- **Croma 100** Hand shower 1jet (# 28580000)
- Shower holder Porter S (# 28331XXX)
- **Isiflex** Shower hose 125 cm (# 28272XXX)

	Chrome	27574000	54.80
Alternative sizes:			
· **Croma 100** Shower holder set Mono with shower hose 160 cm	Chrome	27575000	56.50

Measurements within scale drawings are in mm.

Technical specifications and units of measure are subject to change.

Crometta 100 shower holder sets

	finish	code no.	Euro
Crometta 100 Shower holder set Vario with shower hose 125 cm	White/Chrome	26666400	48.60



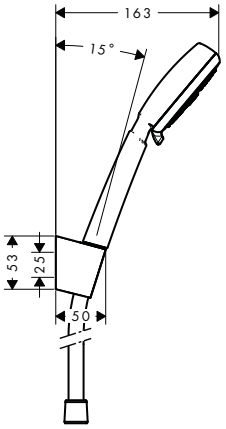

- consists of: hand shower, shower holder, shower hose
- shower head size: 100 mm
- spray type: Rain, normal spray, Shampoo spray, Massage spray
- spray type adjustment by turning spray disc
- maximum flow rate at 3 bar: 18 l/min
- without pivot joints
- wall supports of plastic

Consisting of:
- Shower holder Porter S (# 28331XXX)
- **Metaflex** Shower hose 125 cm (# 28262000)
- **Crometta 100** Hand shower 1jet (# 26825400)

	finish	code no.	Euro
Crometta 100 Shower holder set 1jet with shower hose 125 cm	White/Chrome	26664400	42.60



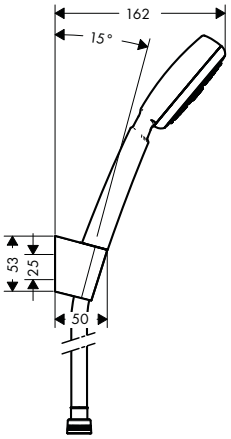

- consists of: hand shower, shower holder, shower hose
- shower head size: 100 mm
- spray type: Rain
- maximum flow rate at 3 bar: 16 l/min
- without pivot joints
- wall supports of plastic

Consisting of:
- **Crometta 100** Hand shower 1jet (# 26825400)
- Shower holder Porter S (# 28331XXX)
- **Metaflex** Shower hose 125 cm (# 28262000)

Alternative sizes:

Crometta 100 Shower holder set 1jet with shower hose 160 cm	White/Chrome	26665400	44.90

Measurements within scale drawings are in mm.

Technical specifications and units of measure are subject to change.

Crometta shower holder sets



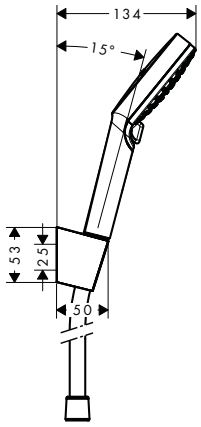

		finish	code no.	Euro
	Crometta Shower holder set Vario with shower hose 125 cm · consists of: hand shower, shower holder, shower hose · shower head size: 100 mm · spray type: Rain, IntenseRain · spray type adjustment by turning spray disc · maximum flow rate at 3 bar: 14 l/ min · pivot connector prevent hose from tangling · wall supports of plastic	White/Chrome	26691400	34.60
	Consisting of: · **Crometta** Hand shower Vario (# 26330400) · Shower holder Porter S (# 28331XXX) · **Comfortflex** Shower hose 125 cm (# 28167000)			
	Alternative sizes: · **Crometta** Shower holder set Vario with shower hose 160 cm	White/Chrome	26692400	37.00
	Water saving EcoSmart version: · **Crometta** Shower holder set Vario EcoSmart 9 l/ min with shower hose 125 cm	White/Chrome	26693400	37.00
	· **Crometta** Shower holder set Vario EcoSmart 9 l/ min with shower hose 160 cm	White/Chrome	26694400	39.10



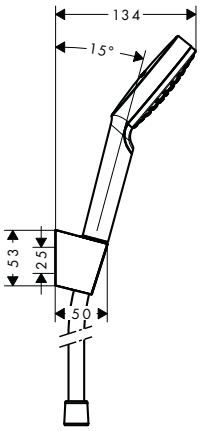

	Crometta Shower holder set 1jet with shower hose 125 cm · consists of: hand shower, shower holder, shower hose · shower head size: 100 mm · spray type: Rain · maximum flow rate at 3 bar: 14 l/ min · pivot connector prevent hose from tangling · wall supports of plastic	White/Chrome	26690400	32.50
	Consisting of: · **Crometta** Hand shower 1jet (# 26331400) · Shower holder Porter S (# 28331XXX) · **Comfortflex** Shower hose 125 cm (# 28167000)			
	Alternative sizes: · **Crometta** Shower holder set 1jet with shower hose 160 cm	White/Chrome	26567400	34.60
	Water saving EcoSmart version: · **Crometta** Shower holder set 1jet EcoSmart 9 l/ min with shower hose 125 cm	White/Chrome	26568400	34.60
	· **Crometta** Shower holder set 1jet EcoSmart 9 l/ min with shower hose 160 cm	White/Chrome	26569400	37.00

Measurements within scale drawings are in mm.

Technical specifications and units of measure are subject to change.

Crometta 85 shower holder sets

	finish	code no.	Euro
 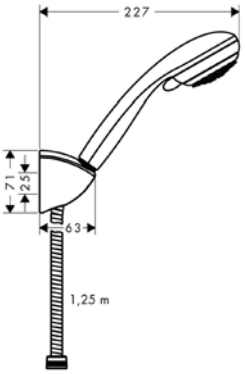	**Crometta 85** Shower holder set Vario with shower hose 125 cm · consists of: hand shower, shower holder, shower hose · shower head size: 85 mm · spray type: Vario spray, normal spray · spray type adjustment by turning spray disc · maximum flow rate at 3 bar: 17 l/min **Consisting of:** · **Crometta 85** Hand shower Vario (# 28562000) · Shower holder Porter C (# 27521000) · **Metaflex** Shower hose 125 cm (# 28262000) **Alternative sizes:**	Chrome	27558000	34.90
	· **Crometta 85** Shower holder set Vario with shower hose 160 cm	Chrome	27559000	37.00
 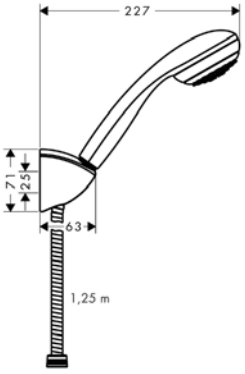	**Crometta 85** Shower holder set Mono with shower hose 125 cm · consists of: hand shower, shower holder, shower hose · shower head size: 85 mm · spray type: normal spray · maximum flow rate at 3 bar: 16 l/min **Consisting of:** · **Crometta 85** Hand shower Mono (# 28585000) · Shower holder Porter C (# 27521000) · **Metaflex** Shower hose 125 cm (# 28262000) **Alternative sizes:**	Chrome	27576000	30.30
	· **Crometta 85** Shower holder set Mono with shower hose 160 cm	Chrome	27577000	33.20

Bidette

	finish	code no.	Euro
 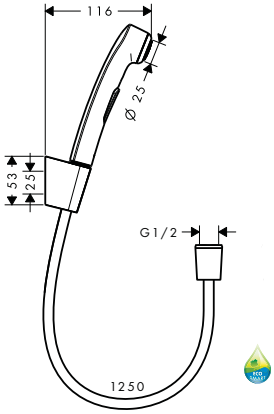	Bidette hand shower 1jet with shower holder and pressure shower hose 125 cm · consists of: bidette hand shower, shower holder, chrome-colored shower hose · maximum flow rate at 3 bar: 6 l/min · with non-return valve · additional comment: surface shower hose chrome **Consisting of:** · Shower holder Porter S (# 28331XXX) **Alternative sizes:**	Chrome	32129000	80.80
	· Bidette hand shower 1jet with shower holder and pressure shower hose 160 cm	Chrome	32128000	82.50

Measurements within scale drawings are in mm.

Technical specifications and units of measure are subject to change.

	finish	code no.	Euro
 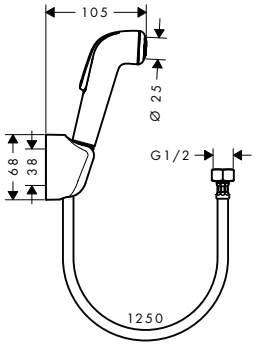			
Bidette hand shower 1jet with shower holder and pressure resistant shower hose 125 cm · consists of: bidette hand shower, shower holder, chrome-colored shower hose · maximum flow rate at 3 bar: 6 l/ min · with non-return valve · additional comment: surface shower hose chrome **Consisting of:** · Shower holder (# 28321000)	White/Chrome	32127000	46.00
Alternative sizes: · Bidette hand shower 1jet with shower holder and pressure resistant shower hose 160 cm	White/Chrome	32122000	48.50

Modern style shower holder

 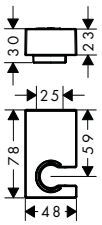			
Shower holder Porter E · fixed holding position · for hoses with conical nut	Chrome Brushed Bronze Brushed Black Chrome Matt Black Matt White Polished Gold Optic	28387000 28387140 28387340 28387670 28387700 28387990	45.60 68.40 68.40 63.80 63.80 68.40
 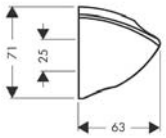			
Shower holder Porter C · fixed holding position · for hoses with conical nut	Chrome	27521000	17.80
 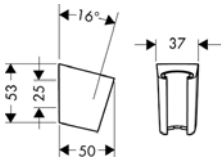			
Shower holder Porter S · fixed holding position · for hoses with conical nut	Chrome Brushed Bronze Brushed Black Chrome Matt Black Matt White Stainless Steel Optic Polished Gold Optic	28331000 28331140 28331340 28331670 28331700 28331800 28331990	23.70 35.60 35.60 33.20 33.20 35.50 35.60
 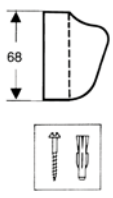			
Shower holder · fixed holding position · for hoses with conical nut	Chrome	28321000	19.90

Measurements within scale drawings are in mm.

Technical specifications and units of measure are subject to change.

	finish	code no.	Euro
Shower holder Porter Reno · fixed holding position · for hoses with conical nut	Chrome	28335000	34.30



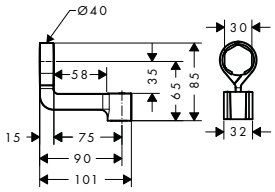

Shower holder Porter Vario · shower holder inclination angle can be adjusted continously · for hoses with conical nut	Chrome	28328000	34.30



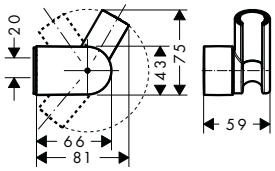

Classic style shower holder

Shower holder porter classic · fixed holding position · for hoses with conical nut	Chrome	28324000	27.70



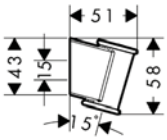

Modern style Fixfit Porter wall outlets



Rainfinity Wall outlet Porter 500 with shower holder and shower shelf left · shelf made of safety glass · surface of the shelf at colour variant -000 = mirror glass, at colour variant -700 = graphite colour, satined · 500 mm storage shelf · integrated support function · plastic connection angle with metal ball joint · installation: wall · hose nut: for shower hoses with conical nut on both sides	Chrome Matt White	26843000 26843700	334.30 434.60

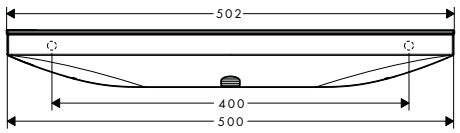

Alternative products:

· **Rainfinity** Wall outlet Porter 500 with shower holder and shower shelf right	Chrome Matt White	26858000 26858700	334.30 434.60

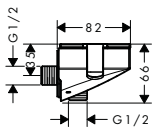

Measurements within scale drawings are in mm.

Technical specifications and units of measure are subject to change.

	finish	code no.	Euro
Rainfinity Wall outlet Porter 500 with shower holder and shower shelf right	Chrome Matt White	26858000 26858700	334.30 434.60



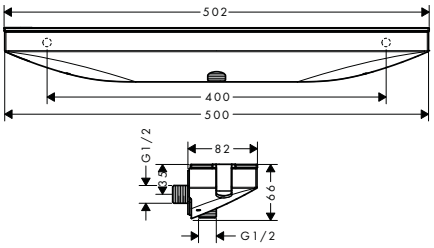

- shelf made of safety glass
- surface of the shelf at colour variant -000 = mirror glass, at colour variant -700 = graphite colour, satined
- 500 mm storage shelf
- integrated support function
- plastic connection angle with metal ball joint
- non-return valve
- installation: wall
- hose nut: for shower hoses with conical nut on both sides

FixFit Wall outlet E with shower holder	Chrome	26485000	79.40



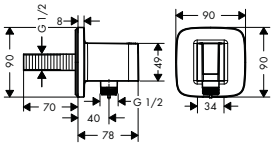

- fixed holding position
- for hoses with conical nut
- with non-return valve
- metal housing with internal water supply made of plastic

FixFit Wall outlet S with shower holder	Chrome	26487000	79.40



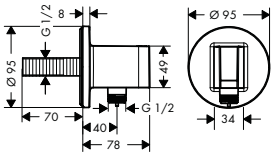

- fixed holding position
- for hoses with conical nut
- with non-return valve
- metal housing with internal water supply made of plastic

FixFit Wall outlet square with shower holder	Chrome	26486000	79.40



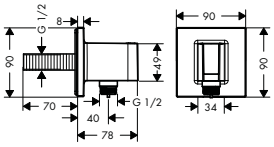

- fixed holding position
- for hoses with conical nut
- with non-return valve
- metal housing with internal water supply made of plastic

FixFit Wall outlet Porter 300 with shower holder and shower shelf	Chrome White/Chrome	26456000 26456400	150.10 150.10



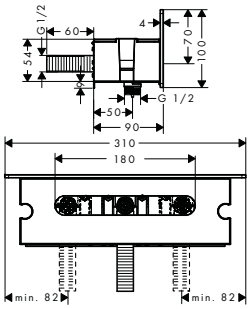

- 300 mm storage shelf
- integrated support function on both sides
- non-return valve
- installation: wall
- flexible positioning, adjustment to left or right by 77.5 mm
- hose nut: for shower hoses with conical nut on both sides
- safety glass

Measurements within scale drawings are in mm.

Technical specifications and units of measure are subject to change.

Modern style Fixfit wall outlets

		finish	code no.	Euro
	**FixFit** Wall outlet E with non-return valve and pivot joint · shower hose connection with ball joint · plastic connection angle with metal ball joint · non-return valve · installation: wall	Chrome	27505000	29.40
	**FixFit** Wall outlet E without non-return valve · installation: wall	Chrome Brushed Bronze Brushed Black Chrome Matt Black Matt White Polished Gold Optic	27454000 27454140 27454340 27454670 27454700 27454990	25.50 38.30 38.30 35.70 35.70 38.30
	Alternative products: · **FixFit** Wall outlet E with non-return valve	Chrome	27458000	49.30
	**FixFit** Wall outlet E stop with non-return valve and shut-off valve · non-return valve · with integrated shut-off valve in metal · with ceramic valve	Chrome	27452000	83.60
	**FixFit** Wall outlet S with non-return valve and pivot joint · shower hose connection with ball joint · plastic connection angle with metal ball joint · non-return valve · installation: wall	Chrome	27506000	33.40
	**FixFit** Wall outlet S without non-return valve · installation: wall	Chrome	27453000	30.60
	Alternative products: · **FixFit** Wall outlet S with non-return valve · **FixFit** Wall outlet S with non-return valve and synthetic connection angle	Chrome Chrome **NEW** Brushed Bronze **NEW** Brushed Black Chrome **NEW** Matt Black **NEW** Matt White **NEW** Polished Gold Optic	27456000 26453000 26453140 26453340 26453670 26453700 26453990	55.00 25.20 37.80 37.80 35.30 35.30 37.80

Measurements within scale drawings are in mm.

Technical specifications and units of measure are subject to change.

	finish	code no.	Euro
FixFit Wall outlet Square with non-return valve · non-return valve · installation: wall	Chrome	26455000	25.20
	Brushed Bronze	26455140	37.80
	Brushed Black	26455340	37.80
	Chrome Matt Black	26455670	35.30
	Matt White	26455700	35.30
	Polished Gold Optic	26455990	37.80
FixFit Wall outlet with non-return valve and pivot joint · shower hose connection with ball joint · plastic connection angle with metal ball joint · non-return valve · installation: wall · hose nut: for shower hoses with conical nut on both sides	Chrome	27414000	40.10
FixFit Wall outlet with non-return valve · non-return valve · installation: wall	Chrome	26457000	25.20
	NEW Brushed Bronze	26457140	37.80
	NEW Brushed Black	26457340	37.80
	Chrome **NEW** Matt Black	26457670	35.30
	NEW Matt White	26457700	35.30
	NEW Polished Gold Optic	26457990	37.80

Classic style Fixfit wall outlet

AXOR Montreux Wall outlet with non-return valve · non-return valve	Chrome	16884000	38.70
	Brushed Nickel	16884820	58.10
Thread connection · connection dimension DN15/DN20	Chrome	02024000	4.40

Measurements within scale drawings are in mm.

Technical specifications and units of measure are subject to change.

Shower hoses and accessories



Sensoflex
metal shower hoses
page 132



Isiflex
shower hoses
page 132



Comfortflex
shower hoses
page 133



Metaflex
shower hoses
page 133



Sensoflex metal shower hoses



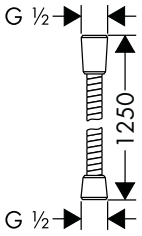

	finish	code no.	Euro
Sensoflex Metal shower hose 125 cm · metal shower hose · with plastic coating, easy to clean · shower hose length: 1.25 m · pivot connector prevent hose from tangling · kink-protected	Chrome	28132000	36.00
Alternative sizes:			
· **Sensoflex** Metal shower hose 160 cm	Chrome	28136000	37.60
· **Sensoflex** Metal shower hose 200 cm	Chrome	28134000	39.50

Isiflex shower hoses



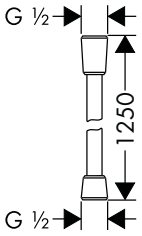

Isiflex Shower hose 125 cm · high-quality shower hose · with plastic coating, easy to clean · shower hose length: 1.25 m · pivot connector prevent hose from tangling · kink-protected	Chrome	28272000	23.10
	NEW Brushed Bronze	28272140	34.70
	NEW Brushed Black Chrome	28272340	34.70
	White	28272450	29.00
	NEW Matt Black	28272670	29.00
	NEW Matt White	28272700	29.00
	NEW Polished Gold Optic	28272990	34.70
Alternative sizes:			
· **Isiflex** Shower hose 160 cm	Chrome	28276000	25.00
	Brushed Bronze	28276140	37.50
	Brushed Black Chrome	28276340	37.50
	White	28276450	31.30
	Matt Black	28276670	35.00
	Matt White	28276700	35.00
	Polished Gold Optic	28276990	37.50
· **Isiflex** Shower hose 200 cm	Chrome	28274000	26.60



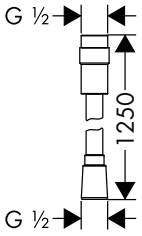

Isiflex Shower hose 125 cm with volume control · high-quality shower hose with metal effect · with plastic coating, easy to clean · shower hose length: 1.25 m · pivot connector prevent hose from tangling · kink-protected · adjustable flow rate between 6 l/ min and 16 l/ min	Chrome	28249000	43.00
Alternative sizes:			
· **Isiflex** Shower hose 160 cm with volume control	Chrome	28248000	45.00

Measurements within scale drawings are in mm.

Technical specifications and units of measure are subject to change.

Comfortflex shower hoses



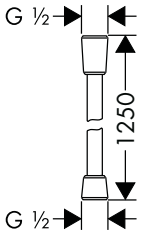

	finish	code no.	Euro
Comfortflex Shower hose 125 cm · high-quality shower hose with metal effect · with plastic coating, easy to clean · shower hose length: 1.25 m · pivot connector prevent hose from tangling · kink-protected	Chrome	28167000	16.30
Alternative sizes:			
· **Comfortflex** Shower hose 160 cm	Chrome	28168000	17.00
· **Comfortflex** Shower hose 200 cm	Chrome	28169000	21.40

Metaflex shower hoses



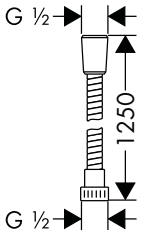

Metaflex Shower hose 125 cm · plastic shower hose with coil winding · with plastic coating, easy to clean · shower hose length: 1.25 m · without pivot joints · kink-protected	Chrome	28262000	12.90
Alternative sizes:			
· **Metaflex** Shower hose 160 cm	Chrome	28266000	13.70
· **Metaflex** Shower hose 200 cm	Chrome	28264000	18.30

Accessories



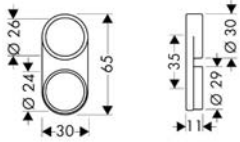

Hose duct · material: transparent plastic	Transparent	28072000	4.10



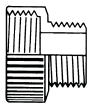

Thread connection · connection dimension DN15/DN20	Chrome	02024000	4.40

Measurements within scale drawings are in mm.

Technical specifications and units of measure are subject to change.

Overhead showers



Rainmaker Select	page 138		Rainfinity	page 143	
Raindance Select E	page 148		Raindance Select S	page 150	
PuraVida	page 152		Raindance Rainmaker	page 153	
Raindance E	page 156		Raindance S	page 160	
Croma Select E	page 164		Croma Select S	page 165	
Croma E	page 166		Croma	page 166	
Crometta E	page 168		Crometta S	page 169	

hansgrohe overhead showers

Selected overhead showers at a glance

		Rainmaker® Select		**Rainfinity®**		
						
		Rainmaker® Select Overhead shower 580 3jet	**Rainmaker® Select** Overhead shower 460 2jet	**Rainfinity®** Overhead shower 360 3jet	**Rainfinity®** Overhead shower 250 3jet	**Raindance® Select E** Overhead shower 300 3jet
Overhead shower	Standard					
	EcoSmart 9 l/min					
	LowPressure					
Overhead shower with wall connection	Standard	24001, -400, -600	24005, -400, -600	26234, -XXX	26232, -000, -700	26468, -000, -400
	EcoSmart 9 l/min	24011, -400	24015, -400		26233, -000, -700	
Overhead shower with ceiling connector	Standard		24004, -400, -600			
	EcoSmart 9 l/min		24014, -400			
Features	Size of shower head	580 x 260 mm	466 x 300 mm	360 mm	250 mm	300 x 190 mm
	Spray face material	Safety glass	Safety glass	Aluminium	Aluminium	Metal
	Spray modes (l/min in the standard version)	RainFlow 17 l/min Rain 17 l/min MonoRain 20 l/min	Rain 18 l/min RainStream 15 l/min	PowderRain20 l/min Intense PowderRain 18 l/min RainStream 16 l/min	PowderRain 20 l/min Intense PowderRain 18 l/min RainStream 16 l/min	Rain 18 l/min RainAir 18 l/min RainStream 22 l/min
Uniques	Select					■
	AirPower					■
	PowderRain			■	■	
	Rain Air					■
	XXL Performance	■	■	■	■	■
	QuickClean	■	■	■	■	■

						
		Rainmaker® Select Overhead shower 460 3jet	**Rainmaker® Select** Overhead shower 460 1jet	**Rainfinity®** Overhead shower 360 1jet	**Rainfinity®** Overhead shower 250 1jet	**Raindance® Select E** Overhead shower 300 2jet
Overhead shower	Standard			26231, -XXX	26228, -XXX	
	EcoSmart 9 l/min				26229, -000, -700	
	LowPressure					
Overhead shower with wall connection	Standard	24007, -400, -600	24003, -400, -600	26230, -XXX	26226, -000, -700	27385, -000, -400
	EcoSmart 9 l/min	24017, -400	24013, -400		26227, -000, -700	26609, -000, -400
Overhead shower with ceiling connector	Standard	24006, -400, -600	24002, -400, -600			27384, -000, -400
	EcoSmart 9 l/min	24016, -400	24012, -400			26608, -000, -400
Features	Size of shower head	466 x 300 mm	466 x 270 mm	360 mm	250 mm	300 x 160 mm
	Spray face material	Safety glass	Safety glass	Aluminium	Aluminium	Metal
	Spray modes (l/min in the standard version)	Rain 18 l/min RainStream 15 l/min MonoRain 18 l/min	Rain 19 l/min	PowderRain 23 l/min	PowderRain 16 l/min	Rain 15 l/min RainAir 15 l/min
Uniques	Select					■
	AirPower					■
	PowderRain			■	■	
	RainAir					■
	XXL Performance	■	■	■	■	■
	QuickClean	■	■	■	■	■

■ Available

Raindance®		**Croma®**			**Crometta®**	
						
Raindance® Select S Overhead shower 300 2jet	**Raindance® E** Overhead shower 300 1jet	**Croma® Select E** Overhead shower 180 2jet	**Croma® E** Overhead shower 280 1jet	**Croma®** Overhead shower 220 1jet	**Crometta® E** Overhead shower 240 1jet	**Crometta®** Overhead shower 160 1jet
		26524, -000, -400	26257, -000	26464, -000	26726, -000	26577, -000
		26528, -000, -400	26258, -000	26465, -000	26727, -000	26578, -000
					26722, -000	
27378, -000, -400	26238, -XXX	+ 27446, -000	+ 27446, -000	+ 27413, -000	+ 27446, -000	+ 27412, -000
	26239, -000	+ 27446, -000	+ 27446, -000	+ 27413, -000	+ 27446, -000	+ 27412, -000
27337, -000, -400	26250, -000	+ 27467, -000	+ 27467, -000	+ 27479, -000	+ 27467, -000	+ 27479, -000
	26251, -000	+ 27467, -000	+ 27467, -000	+ 27479, -000	+ 27467, -000	+ 27479, -000
300 mm	300 x 300 mm	180 x 180 mm	280 mm	220 mm	240 x 240 mm	180 mm
Metal	Metal	Plastic	Metal	Metal	Plastic	Plastic
Rain 17 l/min RainAir 17 l/min	RainAir 19 l/min	Rain 17 l/min IntenseRain 16 l/min	RainAir 18 l/min	RainAir 19 l/min	Rain 18 l/min	Rain 20 l/min
■		■				
■	■					
■	■		■	■		
■	■	■	■	■	■	■
■	■	■	■	■	■	■

						
Raindance® Select S Overhead shower 240 2jet	**Raindance® S** Overhead shower 240 1jet P	**Croma® Select S** Overhead shower 180 2jet	**Croma®** Overhead shower 280 1jet	**Croma®** Overhead shower 160 1jet	**Crometta® S** Overhead shower 240 1jet	
	27623, -000	26522, -000, -400	26220, -XXX	27450, -000	26723, -000	
		26523, -000, -400	26221, -XXX		26724, -000	
					26725, -000	
26466, -000, -400	27607, -000	+ 27413, -000	+ 27413, -XXX	+ 27412, -000	+ 27413, -000	
26470, -000, -400		+ 27413, -000	+ 27413, -XXX	+ 27412, -000	+ 27413, -000	
26467, -000, -400	27620, -000	+ 27393, -000	+ 27479, -000	+ 27479, -000	+ 27393, -000	
26469, -000, -400		+ 27393, -000	+ 27479, -000	+ 27479, -000	+ 27393, -000	
240 mm	240 mm	180 mm	280 mm	160 mm	240 mm	
Metal	Metal	Plastic	Metal	Metal	Plastic	
Rain 17 l/min RainAir 17 l/min	PowderRain 18 l/min	Rain 17 l/min IntenseRain 16 l/min	RainAir 15 l/min	Rain 17 l/min	Rain 18 l/min	
■		■				
■						
	■					
■			■			
■	■	■	■	■	■	
■	■	■	■	■	■	

All specified flow rates are based on an operating pressure of **0.3** MPa (3 bar).

Rainmaker Select overhead showers



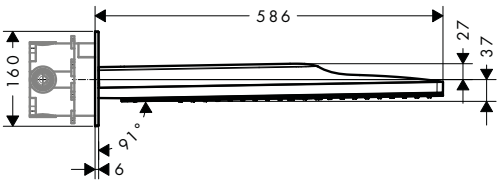

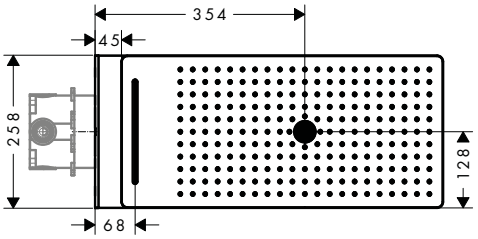

	finish	code no.	Euro
Rainmaker Select Overhead shower 580 3jet	White/Chrome	24001400	2,520.30
	Black/Chrome	24001600	2,520.30

Quick Clean · XXL Performance

- consists of: overhead shower, wall connector
- spray type: Rain, RainFlow, MonoRain
- shower head size: 580 x 260 mm
- flow rate Rain spray (at 3 bar): 17 l/ min
- flow rate Mono spray (at 3 bar): 20 l/ min
- flow rate RainFlow spray (at 3 bar): 17 l/ min
- the 3 spray zones must be controlled via 3 valves or a diverter valve with 3 outlets
- easy cleanable glass spray disc
- material spray disc: safety glass
- spray disc removable for cleaning
- installation: wall-mounted - for installation on iBox
- connection dimension: DN15/DN20

Water saving EcoSmart version:

· **Rainmaker Select** Overhead shower 580 3jet EcoSmart 9 l/ min	White/Chrome	24011400	2,520.30

Required parts:

· Basic set iBox universal		01800180	130.80

Optional parts:

· **ShowerSelect Glass** Valve for concealed installation for 3 functions	White/Chrome	15736400	482.30
	Black/Chrome	15736600	482.30
· **ShowerSelect Glass** Thermostat HighFlow for concealed installation for 1 function and additional outlet	White/Chrome	15735400	663.80
	Black/Chrome	15735600	663.80



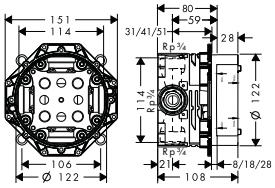

Basic set iBox universal		01800180	130.80

- suitable for all shower, bath tub and thermostat finish sets for concealed installation
- connection thread
- Rp ¾
- rotationally-symmetric installation
- sound-decoupled installation
- connection dimension: DN20

Alternative products:

· Basic set iBox universal with shut-off unit		01850180	169.90

Optional parts:

· Extension iBox universal basic set 2.5 cm		13595000	47.10
· Fastening rail set for iBox universal		96615000	33.40
· Assembly aid for iBox universal		93500000	12.20

Measurements within scale drawings are in mm.

Technical specifications and units of measure are subject to change.



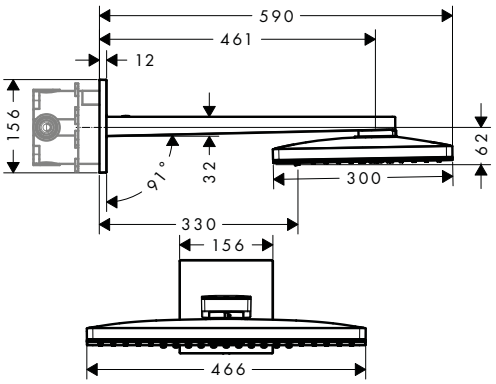

	finish	code no.	Euro
Rainmaker Select Overhead shower 460 3jet with shower arm	White/Chrome	24007400	2,291.30
	Black/Chrome	24007600	2,291.30

· consists of: overhead shower, shower arm
· spray type: Rain, RainStream, MonoRain
· shower head size: 466 x 300 mm
· shower arm length: 461 mm
· flow rate Rain spray (at 3 bar): 18 l/ min
· flow rate RainStream spray (at 3 bar): 15 l/ min
· flow rate Mono spray (at 3 bar): 18 l/ min
· the 3 spray zones must be controlled via 3 valves or a diverter valve with 3 outlets
· easy cleanable glass spray disc
· material spray disc: safety glass
· spray disc removable for cleaning
· overhead shower removable for cleaning
· installation: wall-mounted - for installation on iBox
· connection dimension: DN15

Water saving EcoSmart version:

· **Rainmaker Select** Overhead shower 460 3jet EcoSmart 9 l/ min with shower arm	White/Chrome	24017400	2,291.30

Required parts:

· Basic set iBox universal		01800180	130.80

Optional parts:

· **ShowerSelect Glass** Valve for concealed installation for 3 functions	White/Chrome	15736400	482.30
	Black/Chrome	15736600	482.30
· **ShowerSelect Glass** Thermostat HighFlow for concealed installation for 1 function and additional outlet	White/Chrome	15735400	663.80
	Black/Chrome	15735600	663.80

Measurements within scale drawings are in mm.

Technical specifications and units of measure are subject to change.

	finish	code no.	Euro



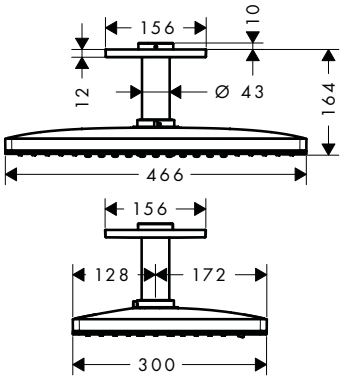

Rainmaker Select Overhead shower 460 3jet with ceiling connector

- consists of: overhead shower, ceiling connector
- spray type: Rain, RainStream, MonoRain
- shower head size: 460 x 300 mm
- ball-joint: overhead shower angle adjustable
- flow rate Rain spray (at 3 bar): 17 l/min
- flow rate RainStream spray (at 3 bar): 22 l/min
- flow rate Mono spray (at 3 bar): 23 l/min
- the 3 spray zones must be controlled via 3 valves or a diverter valve with 3 outlets
- easy cleanable glass spray disc
- material spray disc: safety glass
- spray disc removable for cleaning
- overhead shower removable for cleaning
- brass ceilling connector
- ceiling connection length: 100 mm
- installation: ceiling
- connection dimension: DN15

	finish	code no.	Euro
	White/Chrome	24006400	2,176.60
	Black/Chrome	24006600	2,176.60

Water saving EcoSmart version:

	finish	code no.	Euro
· **Rainmaker Select** Overhead shower 460 3jet EcoSmart 9 l/min with ceiling connector	White/Chrome	24016400	2,176.60

Required parts:

	finish	code no.	Euro
· **Rainmaker Select** Basic set for overhead shower with ceiling connector		24010180	229.10

Optional parts:

	finish	code no.	Euro
· **ShowerSelect Glass** Valve for concealed installation for 3 functions	White/Chrome	15736400	482.30
	Black/Chrome	15736600	482.30
· **ShowerSelect Glass** Thermostat HighFlow for concealed installation for 1 function and additional outlet	White/Chrome	15735400	663.80
	Black/Chrome	15735600	663.80



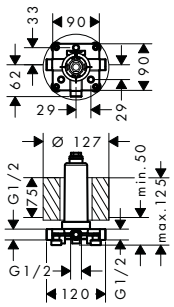

Rainmaker Select Basic set for overhead shower with ceiling connector

	finish	code no.	Euro
		24010180	229.10

Optional parts:

	finish	code no.	Euro
· **Rainmaker Select** Overhead shower 460 1jet EcoSmart 9 l/min with ceiling connector	White/Chrome	24012400	1,489.40
· **Rainmaker Select** Overhead shower 460 1jet with ceiling connector	White/Chrome	24002400	1,489.40
	Black/Chrome	24002600	1,489.40
· **Rainmaker Select** Overhead shower 460 2jet EcoSmart 9 l/min with ceiling connector	White/Chrome	24014400	1,947.60
· **Rainmaker Select** Overhead shower 460 2jet with ceiling connector	White/Chrome	24004400	1,947.60
	Black/Chrome	24004600	1,947.60
· **Rainmaker Select** Overhead shower 460 3jet with ceiling connector	White/Chrome	24006400	2,176.60
	Black/Chrome	24006600	2,176.60
· **Rainmaker Select** Overhead shower 460 3jet EcoSmart 9 l/min with ceiling connector	White/Chrome	24016400	2,176.60

Measurements within scale drawings are in mm.

Technical specifications and units of measure are subject to change.

	finish	code no.	Euro



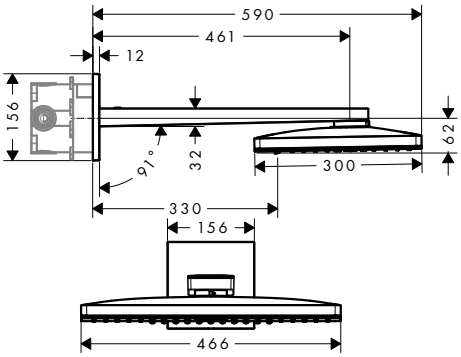

Rainmaker Select Overhead shower 460 2jet with shower arm

- consists of: overhead shower, shower arm
- spray type: Rain, RainStream
- shower head size: 466 x 300 mm
- shower arm length: 461 mm
- flow rate Rain spray (at 3 bar): 18 l/min
- flow rate RainStream spray (at 3 bar): 15 l/min
- the 2 spray zones must be controlled via 2 valves or a diverter valve with 2 outlets
- easy cleanable glass spray disc
- material spray disc: safety glass
- spray disc removable for cleaning
- overhead shower removable for cleaning
- installation: wall-mounted - for installation on iBox
- connection dimension: DN15

	finish	code no.	Euro
	White/Chrome	24005400	2,062.10
	Black/Chrome	24005600	2,062.10
Water saving EcoSmart version:			
· **Rainmaker Select** Overhead shower 460 2jet EcoSmart 9 l/min with shower arm	White/Chrome	24015400	2,062.10
Required parts:			
· Basic set iBox universal		01800180	130.80
Optional parts:			
· **ShowerSelect Glass** Valve for concealed installation for 3 functions	White/Chrome	15736400	482.30
	Black/Chrome	15736600	482.30
· **ShowerSelect Glass** Thermostat HighFlow for concealed installation	White/Chrome	15734400	482.30
	Black/Chrome	15734600	482.30



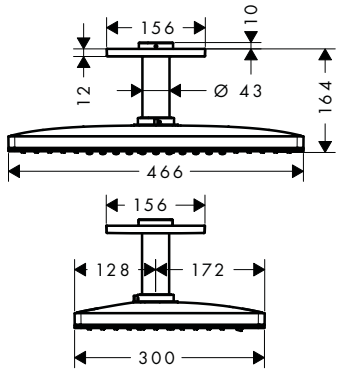

Rainmaker Select Overhead shower 460 2jet with ceiling connector

- consists of: overhead shower, ceiling connector
- spray type: Rain, RainStream
- shower head size: 460 x 300 mm
- flow rate Rain spray (at 3 bar): 21 l/min
- flow rate RainStream spray (at 3 bar): 18 l/min
- the 2 spray zones must be controlled via 2 valves or a diverter valve with 2 outlets
- easy cleanable glass spray disc
- material spray disc: safety glass
- spray disc removable for cleaning
- overhead shower removable for cleaning
- brass ceilling connector
- ceiling connection length: 100 mm
- installation: ceiling
- connection dimension: DN15

	finish	code no.	Euro
	White/Chrome	24004400	1,947.60
	Black/Chrome	24004600	1,947.60
Water saving EcoSmart version:			
· **Rainmaker Select** Overhead shower 460 2jet EcoSmart 9 l/min with ceiling connector	White/Chrome	24014400	1,947.60
Required parts:			
· **Rainmaker Select** Basic set for overhead shower with ceiling connector		24010180	229.10
Optional parts:			
· **ShowerSelect Glass** Valve for concealed installation for 3 functions	White/Chrome	15736400	482.30
	Black/Chrome	15736600	482.30
· **ShowerSelect Glass** Thermostat HighFlow for concealed installation	White/Chrome	15734400	482.30
	Black/Chrome	15734600	482.30

Measurements within scale drawings are in mm.

Technical specifications and units of measure are subject to change.

	finish	code no.	Euro
Rainmaker Select Overhead shower 460 1jet with shower arm	White/Chrome	24003400	1,603.90
	Black/Chrome	24003600	1,603.90



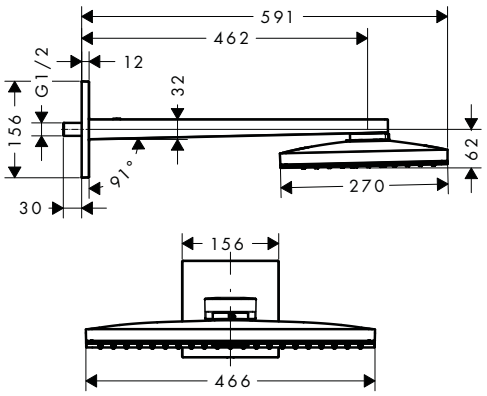

- consists of: overhead shower, shower arm
- spray type: Rain
- shower head size: 466 x 270 mm
- shower arm length: 462 mm
- maximum flow rate at 3 bar: 19 l/min
- flow rate Rain spray (at 3 bar): 19 l/min
- easy cleanable glass spray disc
- material spray disc: safety glass
- spray disc removable for cleaning
- overhead shower removable for cleaning
- installation: wall
- connection thread G ½
- connection dimension: DN15

Water saving EcoSmart version:

· **Rainmaker Select** Overhead shower 460 1jet EcoSmart 9 l/min with shower arm	White/Chrome	24013400	1,603.90

Optional parts:

· **ShowerSelect Glass** Thermostat for concealed installation for 2 functions	White/Chrome	15738400	726.10
	Black/Chrome	15738600	726.10
· **ShowerTablet Select** Thermostat 700 universal for exposed installation for 2 functions	Chrome	13184000	1,145.60
	White/Chrome	13184400	1,145.60

Rainmaker Select Overhead shower 460 1jet with ceiling connector	White/Chrome	24002400	1,489.40
	Black/Chrome	24002600	1,489.40



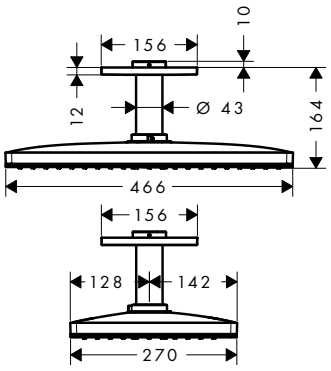

- consists of: overhead shower, ceiling connector
- spray type: Rain
- shower head size: 466 x 270 mm
- flow rate Rain spray (at 3 bar): 21 l/min
- easy cleanable glass spray disc
- material spray disc: safety glass
- spray disc removable for cleaning
- overhead shower removable for cleaning
- brass ceilling connector
- ceiling connection length: 100 mm
- installation: ceiling
- connection dimension: DN15

Water saving EcoSmart version:

· **Rainmaker Select** Overhead shower 460 1jet EcoSmart 9 l/min with ceiling connector	White/Chrome	24012400	1,489.40

Required parts:

· **Rainmaker Select** Basic set for overhead shower with ceiling connector		24010180	229.10

Optional parts:

· **ShowerSelect Glass** Thermostat for concealed installation for 2 functions	White/Chrome	15738400	726.10
	Black/Chrome	15738600	726.10
· **ShowerTablet Select** Thermostat 700 universal for exposed installation for 2 functions	Chrome	13184000	1,145.60
	White/Chrome	13184400	1,145.60

Measurements within scale drawings are in mm.

Technical specifications and units of measure are subject to change.

Rainfinity overhead showers



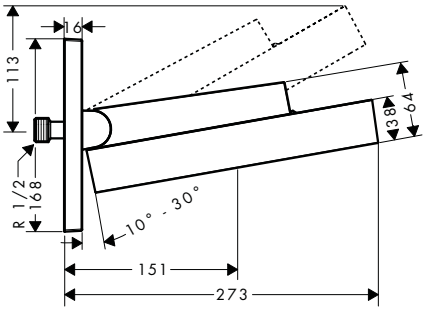

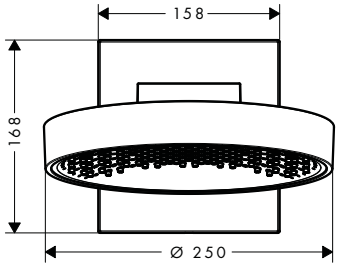

	finish	code no.	Euro
Rainfinity Overhead shower 250 1jet with wall connector	Chrome	26226000	699.00
	Matt White	26226700	908.70

· consists of: overhead shower, wall connector
· projection 273 mm
· spray type: PowderRain
· middle spray disc: 151 mm
· shower head size: 250 mm
· shower arm vertically inclinable by 10-30°
· maximum flow rate at 3 bar: 19 l/min
· flow rate PowderRain spray (at 0.3 bar): 19 l/min
· spray disc surface: graphite
· material spray disc: aluminium
· overhead shower removable for cleaning
· installation: wall
· connection thread G ½
· connection dimension: DN15

Alternative sizes:

· **Rainfinity** Overhead shower 360 1jet with wall connector	Chrome	26230000	800.30
	Brushed Bronze*	26230140	1,200.50
	Brushed Black Chrome*	26230340	1,200.50
	Matt Black*	26230670	1,040.40
	Matt White	26230700	1,040.40
	Polished Gold Optic*	26230990	1,200.50

Water saving EcoSmart version:

· **Rainfinity** Overhead shower 250 1jet EcoSmart with wall connector	Chrome	26227000	699.00
	Matt White	26227700	908.70

*** available from January 2021**

Measurements within scale drawings are in mm.

Technical specifications and units of measure are subject to change.



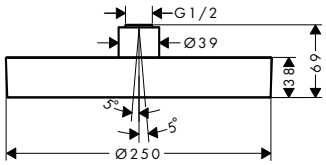

	finish	code no.	Euro
Rainfinity Overhead shower 250 1jet	Chrome	26228000	587.50
· spray type: PowderRain	Brushed Bronze*	26228140	881.30
· shower head size: 250 mm	Brushed Black Chrome*	26228340	881.30
· ball-joint: overhead shower angle (2 x 5°) adjustable	Matt Black*	26228670	763.80
· maximum flow rate at 3 bar: 16.3 l/min	Matt White	26228700	763.80
· flow rate PowderRain spray (at 0.3 bar): 16 l/min	Polished Gold Optic*	26228990	881.30
· spray disc surface: graphite			
· material spray disc: aluminium			
· overhead shower removable for cleaning			
· frame: metal			
· installation: ceiling or wall			
· connection thread G ½			
· connection dimension: DN15			
Alternative sizes:			
· **Rainfinity** Overhead shower 360 1jet	Chrome	26231000	688.80
	Brushed Bronze*	26231140	1,033.20
	Brushed Black Chrome*	26231340	1,033.20
	Matt Black*	26231670	895.50
	Matt White	26231700	895.50
	Polished Gold Optic*	26231990	1,033.20
Water saving EcoSmart version:			
· **Rainfinity** Overhead shower 250 1jet EcoSmart	Chrome	26229000	587.50
	Brushed Bronze*	26229140	881.30
	Brushed Black Chrome*	26229340	881.30
	Matt Black*	26229670	763.80
	Matt White	26229700	763.80
	Polished Gold Optic*	26229990	881.30
Optional parts:			
· Shower arm square 38.9 cm	Chrome	27694000	182.30
	Brushed Bronze*	27694140	273.50
	Brushed Black Chrome*	27694340	273.50
	Matt Black*	27694670	255.20
	Matt White	27694700	255.20
	Polished Gold Optic*	27694990	273.50
· Ceiling connector S 10 cm	Chrome	27393000	55.20
	Brushed Bronze	27393140	82.80
	Brushed Black Chrome	27393340	82.80
	Matt Black	27393670	77.30
	Matt White	27393700	77.30
	Polished Gold Optic	27393990	82.80
· Ceiling connector S 30 cm	Chrome	27389000	78.60
	Brushed Bronze	27389140	118.30
	Brushed Black Chrome	27389340	118.30
	Matt Black	27389670	110.60
	Matt White	27389700	110.60
	Polished Gold Optic	27389990	118.30

Quick Clean

XXL Performance

*** available from January 2021**

Measurements within scale drawings are in mm.

Technical specifications and units of measure are subject to change.



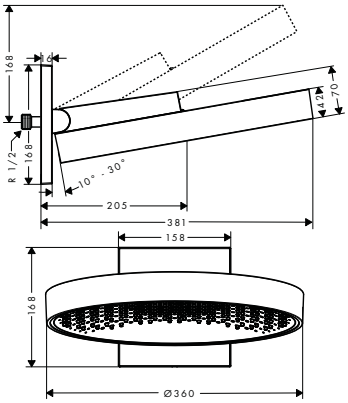

Rainfinity Overhead shower 360 1jet with wall connector

- consists of: overhead shower, wall connector
- projection 381 mm
- spray type: PowderRain
- middle spray disc: 205 mm
- shower head size: 360 mm
- shower arm vertically inclinable by 10-30°
- maximum flow rate at 3 bar: 21 l/min
- flow rate PowderRain spray (at 0.3 bar): 21 l/min
- spray disc surface: graphite
- material spray disc: aluminium
- overhead shower removable for cleaning
- frame: metal
- installation: wall
- connection thread G ½
- connection dimension: DN15

finish	code no.	Euro
Chrome	26230000	800.30
Brushed Bronze*	26230140	1,200.50
Brushed Black Chrome*	26230340	1,200.50
Matt Black*	26230670	1,040.40
Matt White	26230700	1,040.40
Polished Gold Optic*	26230990	1,200.50

Quick Clean · XXL Performance

*** available from January 2021**

Alternative sizes:

- **Rainfinity** Overhead shower 250 1jet with wall connector

Chrome	26226000	699.00
Matt White	26226700	908.70



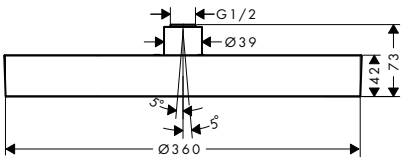

Rainfinity Overhead shower 360 1jet

- spray type: PowderRain
- shower head size: 360 mm
- ball-joint: overhead shower angle (2 x 5°) adjustable
- maximum flow rate at 3 bar: 23.6 l/min
- flow rate PowderRain spray (at 0.3 bar): 23 l/min
- spray disc surface: graphite
- material spray disc: aluminium
- overhead shower removable for cleaning
- frame: metal
- installation: ceiling or wall
- connection thread G ½
- connection dimension: DN15

Chrome	26231000	688.80
Brushed Bronze*	26231140	1,033.20
Brushed Black Chrome*	26231340	1,033.20
Matt Black*	26231670	895.50
Matt White	26231700	895.50
Polished Gold Optic*	26231990	1,033.20

Quick Clean · XXL Performance

*** available from January 2021**

Alternative sizes:

- **Rainfinity** Overhead shower 250 1jet

Chrome	26228000	587.50
Brushed Bronze*	26228140	881.30
Brushed Black Chrome*	26228340	881.30
Matt Black*	26228670	763.80
Matt White	26228700	763.80
Polished Gold Optic*	26228990	881.30

Optional parts:

- Shower arm square 38.9 cm

Chrome	27694000	182.30
Brushed Bronze*	27694140	273.50
Brushed Black Chrome*	27694340	273.50
Matt Black*	27694670	255.20
Matt White	27694700	255.20
Polished Gold Optic*	27694990	273.50

- Ceiling connector S 10 cm

Chrome	27393000	55.20
Brushed Bronze	27393140	82.80
Brushed Black Chrome	27393340	82.80
Matt Black	27393670	77.30
Matt White	27393700	77.30
Polished Gold Optic	27393990	82.80

- Ceiling connector S 30 cm

Chrome	27389000	78.60
Brushed Bronze	27389140	118.30
Brushed Black Chrome	27389340	118.30
Matt Black	27389670	110.60
Matt White	27389700	110.60
Polished Gold Optic	27389990	118.30

Measurements within scale drawings are in mm.

Technical specifications and units of measure are subject to change.



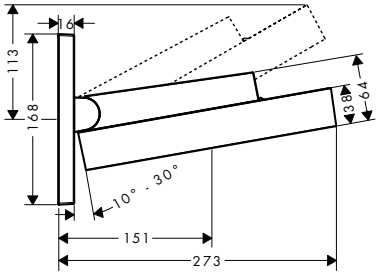

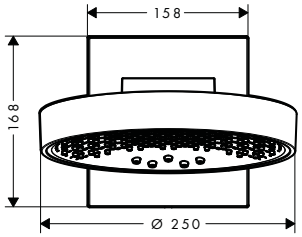

	finish	code no.	Euro
Rainfinity Overhead shower 250 3jet with wall connector	Chrome	26232000	1,002.90
	Matt White	26232700	1,303.70
· consists of: overhead shower, wall connector · projection 273 mm · spray type: PowderRain, Intense PowderRain, RainStream · middle spray disc: 151 mm · shower head size: 250 mm · shower arm vertically inclinable by 10-30° · maximum flow rate at 3 bar: 20 l/min · flow rate RainStream spray (at 3 bar): 16 l/min · flow rate Intense PowderRain (at 3bar): 18 l/min · flow rate PowderRain spray (at 0.3 bar): 20 l/min · the 3 spray zones must be controlled via 3 valves or a diverter valve with 3 outlets · Select button on thermostat · spray disc surface: graphite · material spray disc: aluminium · overhead shower removable for cleaning · frame: metal · installation: wall-mounted - for installation on iBox			
Alternative sizes:			
· **Rainfinity** Overhead shower 360 3jet with wall connector	Chrome	26234000	1,104.20
	Brushed Bronze*	26234140	1,656.30
	Brushed Black Chrome*	26234340	1,656.30
	Matt Black*	26234670	1,435.40
	Matt White	26234700	1,435.40
	Polished Gold Optic*	26234990	1,656.30
Water saving EcoSmart version:			
· **Rainfinity** Overhead shower 250 3jet EcoSmart with wall connector	Chrome	26233000	1,002.90
	Matt White	26233700	1,303.70
Required parts:			
· Basic set iBox universal		01800180	130.80

*** available from January 2021**

Measurements within scale drawings are in mm.

Technical specifications and units of measure are subject to change.



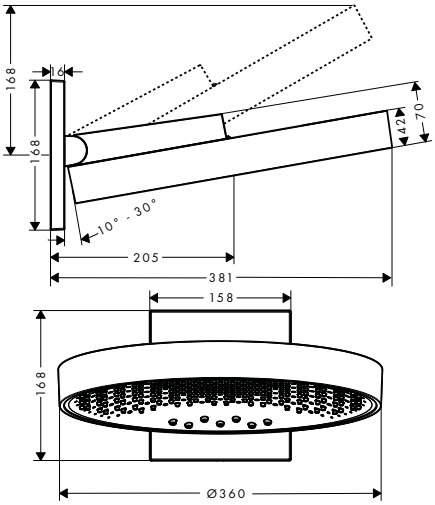

Rainfinity Overhead shower 360 3jet with wall connector

- consists of: overhead shower, wall connector
- projection 381 mm
- spray type: PowderRain, Intense PowderRain, RainStream
- middle spray disc: 205 mm
- shower head size: 360 mm
- shower arm vertically inclinable by 10-30°
- maximum flow rate at 3 bar: 28.1 l/min
- flow rate RainStream spray (at 3 bar): 16 l/min
- flow rate Intense PowderRain (at 3bar): 18 l/min
- flow rate PowderRain spray (at 0.3 bar): 20 l/min
- the 3 spray zones must be controlled via 3 valves or a diverter valve with 3 outlets
- spray disc surface: graphite
- material spray disc: aluminium
- overhead shower removable for cleaning
- frame: metal
- installation: wall-mounted - for installation on iBox
- connection dimension: DN15

finish	code no.	Euro
Chrome	26234000	1,104.20
Brushed Bronze*	26234140	1,656.30
Brushed Black Chrome*	26234340	1,656.30
Matt Black*	26234670	1,435.40
Matt White	26234700	1,435.40
Polished Gold Optic*	26234990	1,656.30

Quick Clean

XXL Performance

*** available from January 2021**

Alternative sizes:

·	**Rainfinity** Overhead shower 250 3jet with wall connector	Chrome	26232000	1,002.90
		Matt White	26232700	1,303.70

Required parts:

·	Basic set iBox universal	01800180	130.80

Measurements within scale drawings are in mm.

Technical specifications and units of measure are subject to change.

Raindance Select E

	finish	code no.	Euro
Raindance Select E Overhead shower 300 3jet with shower arm	Chrome	26468000	772.50
	White/Chrome	26468400	772.50



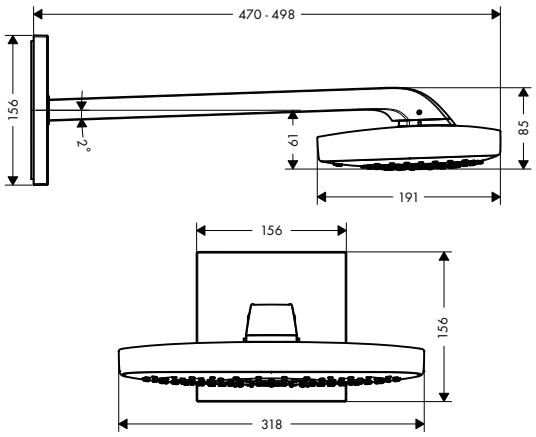

- consists of: overhead shower, shower arm
- spray type: RainAir, Rain, RainStream
- shower head size: 318 x 191 mm
- shower arm length: 390 mm
- maximum flow rate at 3 bar: 22 l/ min
- flow rate Rain spray (at 3 bar): 18 l/ min
- flow rate RainAir spray (at 3 bar): 18 l/ min
- flow rate RainStream spray (at 3 bar): 22 l/ min
- spray type alternation between Rain and RainAir: Select button on overhead shower
- spray type RainStream: Select Button on installation for 3 functions thermostat
- spray disc surface in two variants: chrome or white
- material spray disc: metal
- spray disc removable for cleaning
- installation: wall-mounted - for installation on iBox

Required parts:

· Basic set iBox universal		01800180	130.80

Optional parts:

· **ShowerSelect** Thermostat HighFlow for concealed installation	Chrome	15760000	387.90
· **ShowerSelect** Thermostat for concealed installation for 2 functions	Chrome	15763000	584.70
· **ShowerSelect** Valve for concealed installation for 3 functions	Chrome	15764000	387.90

Raindance Select E Overhead shower 300 2jet with ceiling connector	Chrome	27384000	516.00
	White/Chrome	27384400	516.00



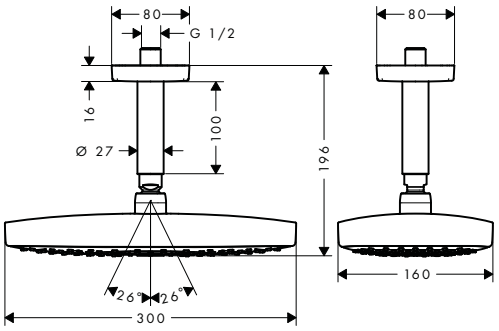

- consists of: overhead shower, ceiling connector
- spray type: Rain, RainAir
- shower head size: 300 x 160 mm
- ball-joint: overhead shower angle adjustable
- flow rate Rain spray (at 3 bar): 15 l/ min
- flow rate RainAir spray (at 3 bar): 15 l/ min
- Select button on overhead shower
- spray disc surface in two variants: chrome or white
- material spray disc: metal
- spray disc removable for cleaning
- brass ceilling connector
- ceiling connection length: 100 mm
- installation: ceiling
- connection thread G ½
- connection dimension: DN15

Water saving EcoSmart version:

· **Raindance Select E** Overhead shower 300 2jet EcoSmart 9 l/ min with ceiling connector	Chrome	26608000	516.00
	White/Chrome	26608400	516.00

Measurements within scale drawings are in mm.

Technical specifications and units of measure are subject to change.

	finish	code no.	Euro



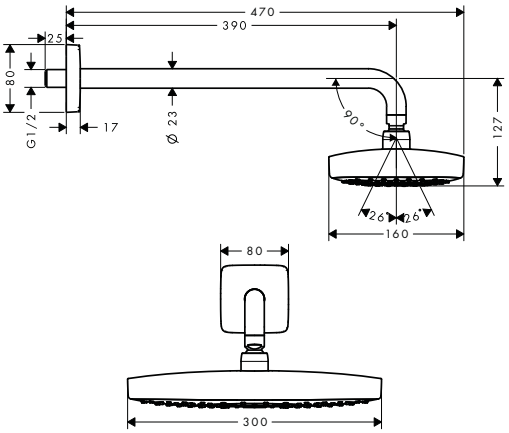

Raindance Select E Overhead shower 300 2jet with shower arm

Chrome	27385000	553.00
White/Chrome	27385400	553.00

Select · Air Power · Quick Clean · XXL Performance

- consists of: overhead shower, shower arm
- spray type: Rain, RainAir
- shower head size: 300 x 160 mm
- shower arm length: 390 mm
- ball-joint: overhead shower angle adjustable
- flow rate Rain spray (at 3 bar): 15 l/min
- flow rate RainAir spray (at 3 bar): 15 l/min
- Select button on overhead shower
- spray disc surface in two variants: chrome or white
- material spray disc: metal
- spray disc removable for cleaning
- installation: wall
- connection thread G ½
- connection dimension: DN15

Water saving EcoSmart version:

- **Raindance Select E** Overhead shower 300 2jet EcoSmart 9 l/min with shower arm

Chrome	26609000	553.00
White/Chrome	26609400	553.00





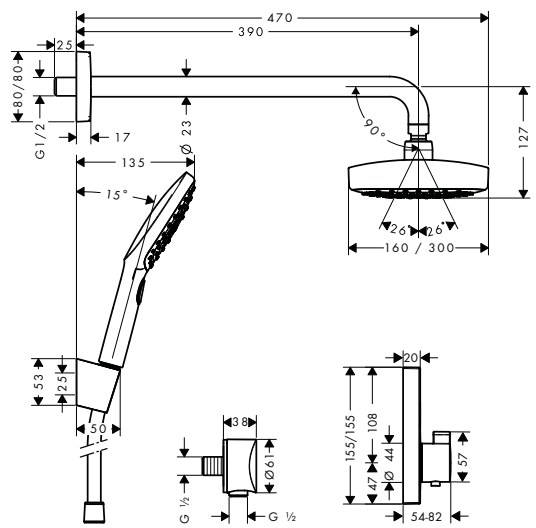

Raindance Select E Shower system for concealed installation with ShowerSelect thermostat

Chrome	27296000	1,259.10

- consists of: overhead shower, hand shower, shower thermostat, basic set, shower arm, shower holder, wall outlet, shower hose
- maximum flow rate at 3 bar: 15 l/min

Consisting of:

- **Raindance Select E** Overhead shower 300 2jet with shower arm (# 27385XXX)
- **Raindance Select E** Hand shower 120 3jet (# 26520XXX)
- **Isiflex** Shower hose 125 cm (# 28272XXX)
- Shower holder Porter S (# 28331XXX)
- **FixFit** Wall outlet S without non-return valve (# 27453000)
- **ShowerSelect** Thermostat for concealed installation for 2 functions (# 15763XXX)
- Basic set iBox universal (# 01800180)

Measurements within scale drawings are in mm.

Technical specifications and units of measure are subject to change.

Raindance Select S

	finish	code no.	Euro
Raindance Select S Overhead shower 300 2jet with ceiling connector	Chrome	27337000	499.10
	White/Chrome	27337400	499.10



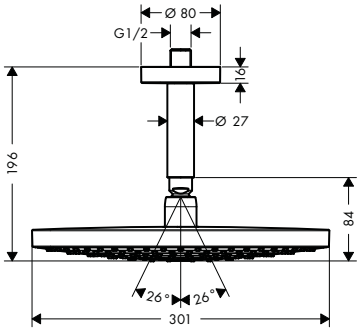

- consists of: overhead shower, ceiling connector
- spray type: Rain, RainAir
- shower head size: 300 mm
- ball-joint: overhead shower angle adjustable
- flow rate Rain spray (at 3 bar): 17 l/min
- flow rate RainAir spray (at 3 bar): 17 l/min
- Select button on overhead shower
- spray disc surface in two variants: chrome or white
- material spray disc: metal
- spray disc removable for cleaning
- brass ceilling connector
- ceiling connection length: 100 mm
- installation: ceiling
- connection thread G ½
- connection dimension: DN15

Raindance Select S Overhead shower 300 2jet with shower arm	Chrome	27378000	534.80
	White/Chrome	27378400	534.80



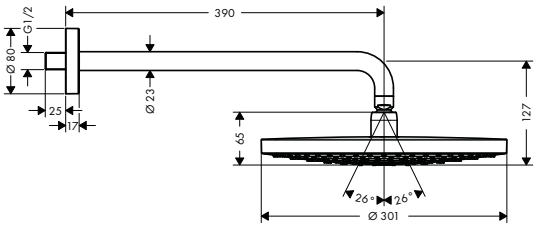

- consists of: overhead shower, shower arm
- spray type: RainAir, Rain
- shower head size: 300 mm
- shower arm length: 390 mm
- ball-joint: overhead shower angle adjustable
- flow rate Rain spray (at 3 bar): 17 l/min
- flow rate RainAir spray (at 3 bar): 17 l/min
- Select button on overhead shower
- spray disc surface in two variants: chrome or white
- material spray disc: metal
- spray disc removable for cleaning
- installation: wall
- connection thread G ½
- connection dimension: DN15

Measurements within scale drawings are in mm.

Technical specifications and units of measure are subject to change.

	finish	code no.	Euro



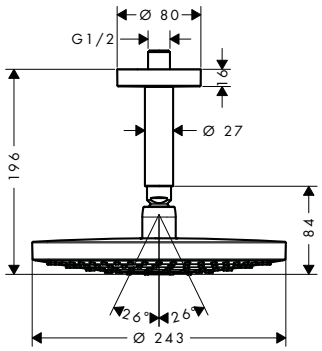

Raindance Select S Overhead shower 240 2jet with ceiling connector

- consists of: overhead shower, ceiling connector
- spray type: RainAir, Rain
- shower head size: 240 mm
- ball-joint: overhead shower angle adjustable
- flow rate Rain spray (at 3 bar): 17 l/min
- flow rate RainAir spray (at 3 bar): 17 l/min
- Select button on overhead shower
- spray disc surface in two variants: chrome or white
- material spray disc: metal
- spray disc removable for cleaning
- brass ceilling connector
- ceiling connection length: 100 mm
- installation: ceiling
- connection thread G ½
- connection dimension: DN15

Chrome	26467000	380.30
White/Chrome	26467400	380.30

Select · Air Power · Quick Clean · XXL Performance

Water saving EcoSmart version:

- **Raindance Select S** Overhead shower 240 2jet EcoSmart 9 l/min with ceiling connector

Chrome	26469000	380.30



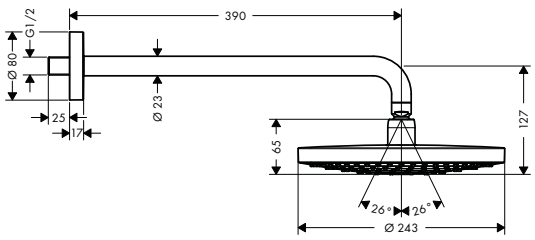

Raindance Select S Overhead shower 240 2jet with shower arm

- consists of: overhead shower, shower arm
- spray type: RainAir, Rain
- shower head size: 240 mm
- shower arm length: 390 mm
- ball-joint: overhead shower angle adjustable
- flow rate Rain spray (at 3 bar): 17 l/min
- flow rate RainAir spray (at 3 bar): 17 l/min
- Select button on overhead shower
- spray disc surface in two variants: chrome or white
- material spray disc: metal
- spray disc removable for cleaning
- installation: wall
- connection thread G ½
- connection dimension: DN15

Chrome	26466000	415.90
White/Chrome	26466400	415.90

Select · Air Power · Quick Clean · XXL Performance

Water saving EcoSmart version:

- **Raindance Select S** Overhead shower 240 2jet EcoSmart 9 l/min with shower arm

Chrome	26470000	415.90
White/Chrome	26470400	415.90

Measurements within scale drawings are in mm.

Technical specifications and units of measure are subject to change.

	finish	code no.	Euro



Raindance Select S Shower system for concealed installation with ShowerSelect S thermostat

- consists of: overhead shower, hand shower, shower thermostat, basic set, shower arm, shower holder, wall outlet, shower hose
- maximum flow rate at 3 bar: 17 l/ min

Consisting of:

- **Raindance Select S** Overhead shower 240 2jet with shower arm (# 26466XXX)
- **Raindance Select S** Hand shower 120 3jet (# 26530XXX)
- **Isiflex** Shower hose 125 cm (# 28272XXX)
- Shower holder Porter S (# 28331XXX)
- **FixFit** Wall outlet S without non-return valve (# 27453000)
- **ShowerSelect S** Thermostat for concealed installation for 2 functions (# 15743XXX)
- Basic set iBox universal (# 01800180)

Chrome	27297000	1,133.00

PuraVida

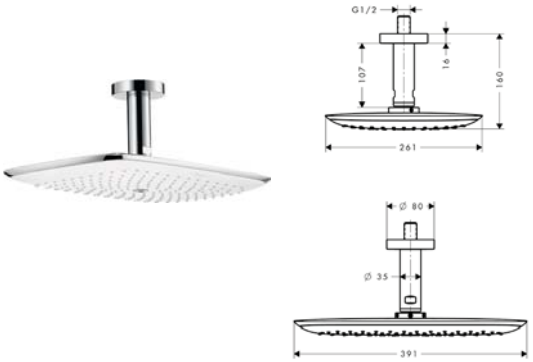

PuraVida Overhead shower 400 1jet with ceiling connector

- consists of: overhead shower, ceiling connector
- spray type: RainAir
- shower head size: 390 x 260 mm
- ball-joint: overhead shower angle adjustable
- flow rate RainAir spray (at 3 bar): 21 l/ min
- spray disc surface in two variants: chrome or white
- material spray disc: metal
- ceiling connection length: 100 mm
- installation: ceiling
- connection thread G ½
- connection dimension: DN15

Chrome	27390000	1,147.10
White/Chrome	27390400	1,147.10

Air Power · Quick Clean · XXL Performance

Optional parts:

- **PuraVida** Thermostat for concealed installation with shut-off/ diverter valve

Chrome	15771000	1,178.70
White/Chrome	15771400	1,178.70

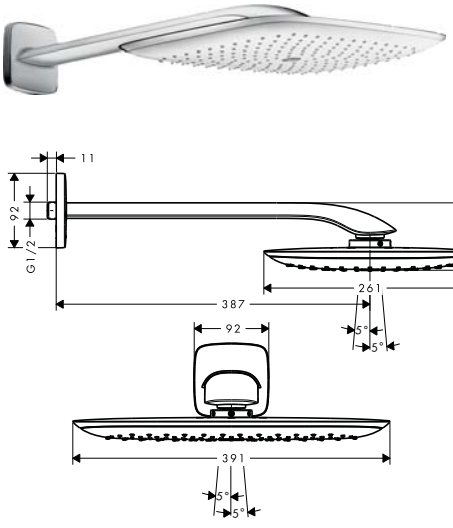

PuraVida Overhead shower 400 1jet with shower arm

- consists of: overhead shower, shower arm
- spray type: RainAir
- shower head size: 390 x 260 mm
- shower arm length: 390 mm
- flow rate RainAir spray (at 3 bar): 21 l/ min
- spray disc surface in two variants: chrome or white
- material spray disc: metal
- installation: wall
- connection thread G ½
- connection dimension: DN15

Chrome	27437000	1,237.60
White/Chrome	27437400	1,237.60

Air Power · Quick Clean · XXL Performance

Optional parts:

- **PuraVida** Thermostat for concealed installation with shut-off/ diverter valve

Chrome	15771000	1,178.70
White/Chrome	15771400	1,178.70

Measurements within scale drawings are in mm.

Technical specifications and units of measure are subject to change.

Raindance Rainmaker

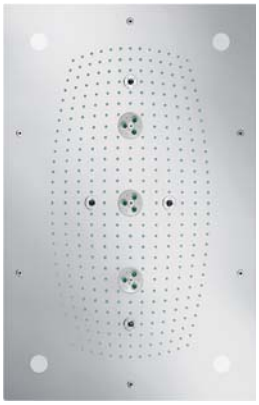

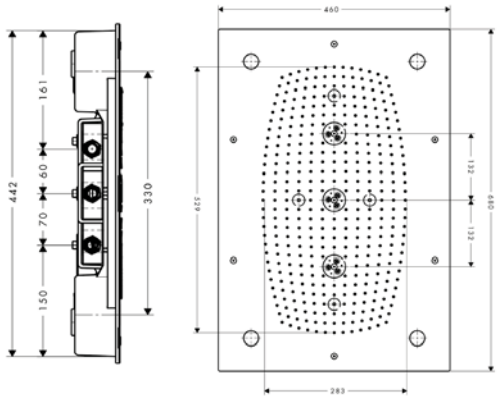

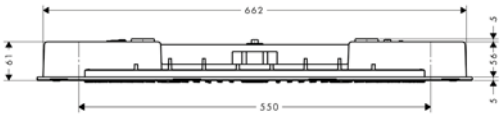

	finish	code no.	Euro
Raindance Rainmaker Overhead shower 680/460 3jet with lighting · consists of: overhead shower, basic set · spray type: RainAir, Whirl, RainAir XL · shower head size: 680 x 460 mm · flow rate RainAir spray (at 3 bar): 20 l/min · flow rate RainAir XL (at 3 bar): 24 l/min · flow rate WhirlAir spray (at 3 bar): 22 l/min · the 3 spray zones must be controlled via 3 valves or a diverter valve with 3 outlets · material spray disc: metal · installation: flush with the ceiling on basic body · connection thread G ½ · connection dimension: DN20 · with integrated lighting · illuminant: LED · power supply: 12 V - DC · transformer power supply for concealed installation 12 V, 18 W · input voltage: 100 - 240 V AC / 50 / 60 Hz · output voltage: 12 V - DC · colour temperature: 2700 K · energy efficiency label: C · TÜV certified	Chrome	28418000 Air Power · Quick Clean · XXL Performance	4,838.60
Alternative products:			
· **Raindance Rainmaker** Overhead shower 680/460 3jet without lighting	Chrome	28417000	4,057.50
Required parts:			
· **Raindance Rainmaker** Basic set for overhead shower 680/460 3jet		28414180	118.40
Optional parts:			
· **ShowerSelect** Thermostat HighFlow for concealed installation for 1 function and additional outlet	Chrome	15761000	536.90
· **ShowerSelect** Valve for concealed installation for 3 functions	Chrome	15764000	387.90



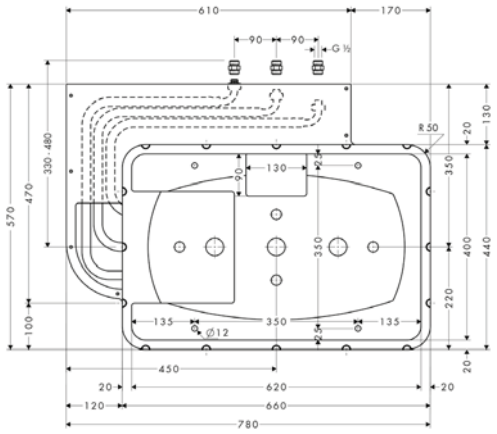

Raindance Rainmaker Basic set for overhead shower 680/460 3jet · connection dimension: G ½		28414180	118.40
Optional parts:			
· **Raindance Rainmaker** Overhead shower 680/460 3jet with lighting	Chrome	28418000	4,838.60
· **Raindance Rainmaker** Overhead shower 680/460 3jet without lighting	Chrome	28417000	4,057.50

Measurements within scale drawings are in mm.

Technical specifications and units of measure are subject to change.

	finish	code no.	Euro



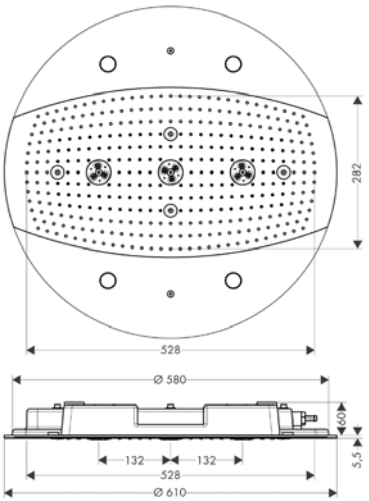

Raindance Rainmaker Overhead shower 600 3jet with lighting

Chrome — 26117000 — 4,839.20

Air Power · Quick Clean · XXL Performance

- spray type: RainAir, Whirl, RainAir XL
- shower head size: 600 mm
- flow rate RainAir spray (at 3 bar): 20.5 l/ min
- flow rate RainAir XL (at 3 bar): 25 l/ min
- flow rate WhirlAir spray (at 3 bar): 20.5 l/ min
- the 3 spray zones must be controlled via 3 valves or a diverter valve with 3 outlets
- material spray disc: metal
- installation: flush with the ceiling on basic body
- connection dimension: DN20
- with integrated lighting
- illuminant: LED
- power supply: 12 V - DC
- transformer power supply for concealed installation 12 V, 18 W
- input voltage: 100 - 240 V AC / 50 / 60 Hz
- output voltage: 12 V - DC
- colour temperature: 2700 K
- energy efficiency label: C
- TÜV certified

Alternative products:

- **Raindance Rainmaker** Overhead shower 600 3jet without lighting — Chrome — 26115000 — 4,057.60

Required parts:

- **Raindance Rainmaker** Basic set for overhead shower 600 3jet — 28412180 — 114.20

Optional parts:

- **ShowerSelect S** Valve for concealed installation for 3 functions — Chrome — 15745000 — 387.90
- **ShowerSelect S** Thermostat HighFlow for concealed installation for 1 function and additional outlet — Chrome — 15742000 — 536.90



Raindance Rainmaker Basic set for overhead shower 600 3jet

28412180 — 114.20

- connection dimension: G ½

Optional parts:

- **Raindance Rainmaker** Overhead shower 600 3jet with lighting — Chrome — 26117000 — 4,839.20
- **Raindance Rainmaker** Overhead shower 600 3jet without lighting — Chrome — 26115000 — 4,057.60

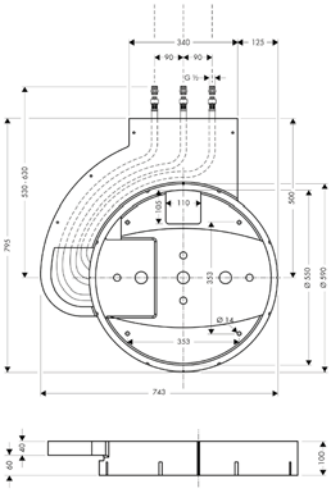

Measurements within scale drawings are in mm.

Technical specifications and units of measure are subject to change.

Raindance 260 x 260 mm overhead shower for concealed installation



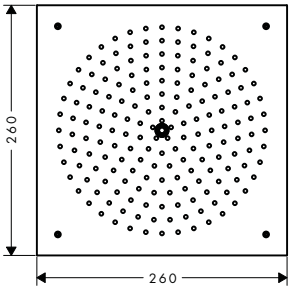

	finish	code no.	Euro
Raindance Overhead shower 260/260 1jet · spray type: RainAir · shower head size: 260 x 260 mm · flow rate RainAir spray (at 3 bar): 15 l/min · material spray disc: metal · spray disc removable for cleaning · installation: flush with the ceiling · connection thread G ½ · connection dimension: DN15	Chrome	26472000	410.60
Water saving EcoSmart version: · **Raindance** Overhead shower 260/260 1jet EcoSmart 9 l/min	Chrome	26481000	410.60
Required parts: · **Raindance** Basic set for overhead shower 260/260 1jet		26471180	93.90
Optional parts: · **ShowerSelect** Thermostat for concealed installation for 2 functions	Chrome	15763000	584.70



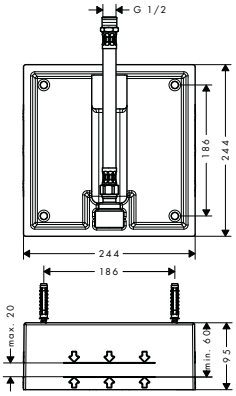

Raindance Basic set for overhead shower 260/260 1jet · connection dimension: G ½		26471180	93.90
Optional parts: · **Raindance** Overhead shower 260/260 1jet	Chrome	26472000	410.60
· **Raindance** Overhead shower 260/260 1jet EcoSmart 9 l/min	Chrome	26481000	410.60

Raindance Rainfall



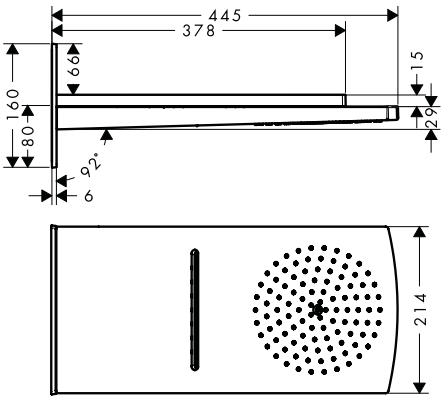

Raindance Rainfall Overhead shower 180 2jet · consists of: overhead shower, wall connector · spray type: RainAir, wide flood jet · shower head size: 180 mm · flow rate RainAir spray (at 3 bar): 17 l/min · flow rate RainFlow spray (at 3 bar): 24 l/min · the 2 spray zones must be controlled via 2 valves or a diverter valve with 2 outlets · spray disc surface in two variants: chrome or white · material spray disc: metal · installation: wall-mounted - for installation on iBox · connection dimension: DN15	Chrome White/Chrome	28433000 28433400	1,295.60 1,295.60
Required parts: · Basic set iBox universal		01800180	130.80
Optional parts: · **ShowerSelect** Thermostat HighFlow for concealed installation	Chrome	15760000	387.90
· **ShowerSelect** Valve for concealed installation for 3 functions	Chrome	15764000	387.90

Measurements within scale drawings are in mm.

Technical specifications and units of measure are subject to change.

	finish	code no.	Euro



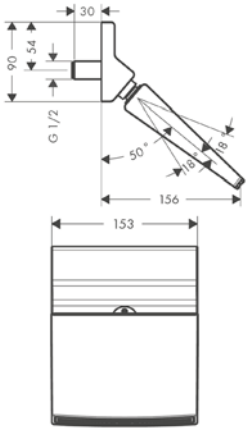

Raindance Rainfall Overhead shower 150 1jet stream — Chrome — 26443000 — 254.70

XXL Performance

- spray type: Stream
- shower head size: 150 mm
- ball-joint: overhead shower angle adjustable
- flow rate RainStream spray (at 3 bar): 18 l/min
- installation: wall
- connection thread G ½
- connection dimension: DN15

Optional parts:

- **ShowerSelect** Thermostat for concealed installation for 1 function — Chrome — 15762000 — 536.90



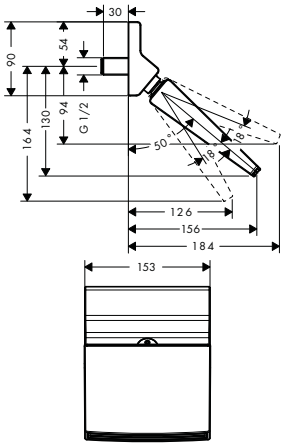

Raindance Rainfall Overhead shower 150 1jet — Chrome — 26442000 — 254.70

XXL Performance

- spray type: wide flood jet
- shower head size: 150 mm
- ball-joint: overhead shower angle adjustable
- flow rate RainFlow spray (at 3 bar): 18 l/min
- installation: wall
- connection thread G ½
- connection dimension: DN15

Optional parts:

- **ShowerSelect** Thermostat for concealed installation for 1 function — Chrome — 15762000 — 536.90

Raindance E



Raindance E Overhead shower 300 1jet with shower arm

Chrome	26238000	528.40
Brushed Bronze	26238140	792.60
Brushed Black	26238340	792.60
Chrome Matt Black	26238670	739.80
Matt White	26238700	739.80
Polished Gold Optic	26238990	792.60

Air Power · Quick Clean · XXL Performance

- consists of: overhead shower, shower arm
- spray type: RainAir
- shower head size: 300 x 300 mm
- shower arm length: 390 mm
- ball-joint: overhead shower angle adjustable
- flow rate RainAir spray (at 3 bar): 17 l/min
- material spray disc: metal
- spray disc removable for cleaning
- installation: wall
- connection thread G ½
- connection dimension: DN15

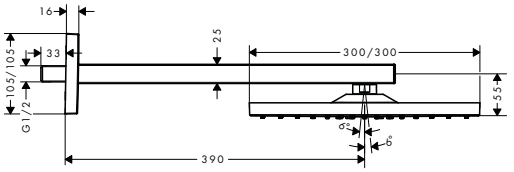

Water saving EcoSmart version:

- **Raindance E** Overhead shower 300 1jet EcoSmart 9 l/min with shower arm — Chrome — 26239000 — 528.40

Measurements within scale drawings are in mm.

Technical specifications and units of measure are subject to change.

	finish	code no.	Euro

NEW

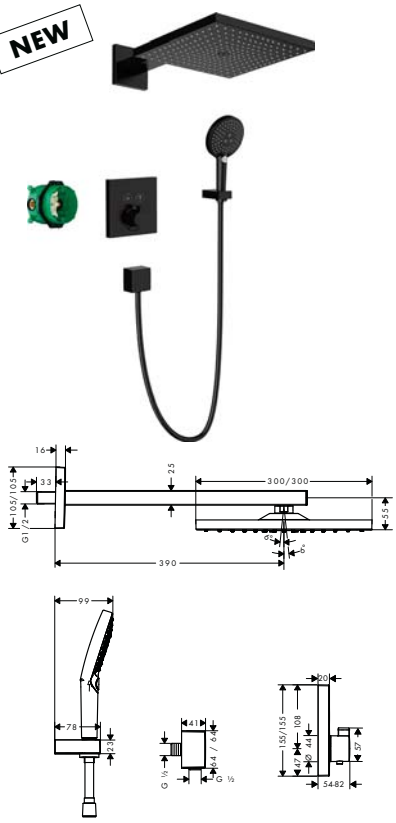

Raindance E Shower system for concealed installation with ShowerSelect thermostat

Matt Black	27939670	1,938.00

· consists of: overhead shower, hand shower, shower thermostat, shower arm, shower holder, wall outlet, shower hose, basic set

Consisting of:
- **Raindance E** Overhead shower 300 1jet with shower arm (# 26238XXX)
- **Raindance Select S** Hand shower 120 3jet (# 26530XXX)
- **ShowerSelect** Thermostat for concealed installation for 2 functions (# 15763XXX)
- Shower holder Porter E (# 28387XXX)
- **FixFit** Wall outlet Square with non-return valve (# 26455XXX)
- **Isiflex** Shower hose 125 cm (# 28272XXX)
- Basic set iBox universal (# 01800180)



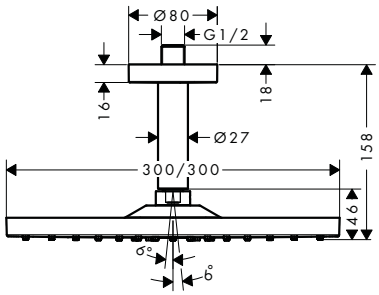

Raindance E Overhead shower 300 1jet with ceiling connector

Chrome	26250000	496.40
Brushed Bronze	26250140	744.60
Brushed Black	26250340	744.60
Chrome		
Matt Black	26250670	695.00
Matt White	26250700	695.00
Polished Gold Optic	26250990	744.60

Air Power · Quick Clean · XXL Performance

· consists of: overhead shower, ceiling connector
· spray type: RainAir
· shower head size: 300 x 300 mm
· ball-joint: overhead shower angle adjustable
· flow rate RainAir spray (at 3 bar): 17 l/min
· material spray disc: metal
· spray disc removable for cleaning
· brass ceilling connector
· ceiling connection length: 158 mm
· installation: ceiling
· connection thread G ½
· connection dimension: DN15

Water saving EcoSmart version:

Chrome	26251000	496.40

· **Raindance E** Overhead shower 300 1jet EcoSmart 9 l/min with ceiling connector

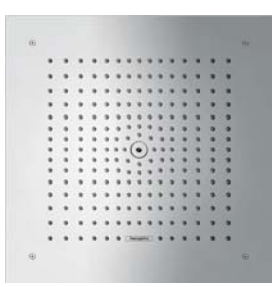

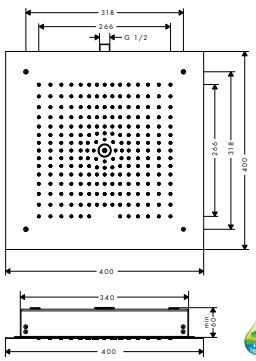

Raindance E Overhead shower 400/400 1jet

Chrome	26252000	800.60

Air Power · Quick Clean · XXL Performance

· spray type: RainAir
· shower head size: 400 x 400 mm
· flow rate RainAir spray (at 3 bar): 20 l/min
· material spray disc: metal
· installation: flush with the ceiling
· connection thread G ½
· connection dimension: DN15

Water saving EcoSmart version:

Chrome	26253000	800.60

· **Raindance E** Overhead shower 400/400 1jet EcoSmart 9 l/min

Required parts:

	26254180	117.40

· **Raindance E** Basic set for overhead shower 400/400 1jet

Measurements within scale drawings are in mm.

Technical specifications and units of measure are subject to change.

	finish	code no.	Euro
 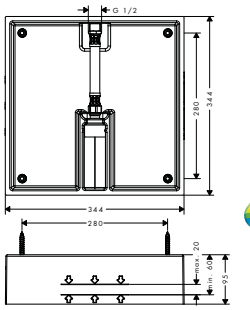 **Raindance E** Basic set for overhead shower 400/400 1jet		26254180	117.40
Optional parts:			
· **Raindance E** Overhead shower 400/400 1jet	Chrome	26252000	800.60
· **Raindance E** Overhead shower 400/400 1jet EcoSmart 9 l/min	Chrome	26253000	800.60
 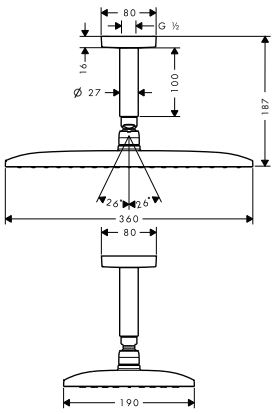 **Raindance E** Overhead shower 360 1jet with ceiling connector · consists of: overhead shower, ceiling connector · spray type: RainAir · shower head size: 360 x 190 mm · ball-joint: overhead shower angle adjustable · flow rate RainAir spray (at 3 bar): 16 l/min · material spray disc: metal · spray disc removable for cleaning · brass ceilling connector · ceiling connection length: 100 mm · installation: ceiling · connection thread G ½ · connection dimension: DN15	Chrome	27381000	587.90
Water saving EcoSmart version:			
· **Raindance E** Overhead shower 360 1jet EcoSmart 9 l/min with ceiling connector	Chrome	26604000	587.90
 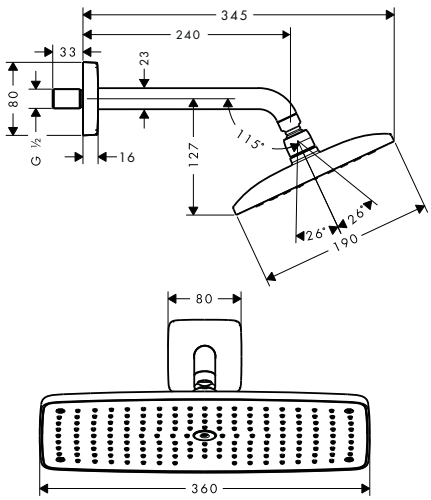 **Raindance E** Overhead shower 360 1jet with shower arm 24 cm · consists of: overhead shower, shower arm · spray type: RainAir · shower head size: 360 x 190 mm · shower arm length: 240 mm · ball-joint: overhead shower angle adjustable · flow rate RainAir spray (at 3 bar): 17 l/min · material spray disc: metal · spray disc removable for cleaning · installation: wall · connection thread G ½ · connection dimension: DN15	Chrome	27371000	625.80

Measurements within scale drawings are in mm.

Technical specifications and units of measure are subject to change.

	finish	code no.	Euro



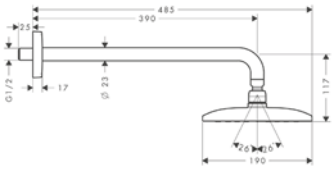

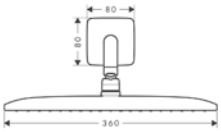

Raindance E Overhead shower 360 1jet with shower arm 39 cm — Chrome — 27376000 — 621.70

Air Power · Quick Clean · XXL Performance

- consists of: overhead shower, shower arm
- spray type: RainAir
- shower head size: 360 x 190 mm
- shower arm length: 390 mm
- ball-joint: overhead shower angle adjustable
- flow rate RainAir spray (at 3 bar): 17 l/min
- material spray disc: metal
- spray disc removable for cleaning
- installation: wall
- connection thread G ½
- connection dimension: DN15

Water saving EcoSmart version:

- **Raindance E** Overhead shower 360 1jet EcoSmart 9 l/min with shower arm — Chrome — 26605000 — 621.70



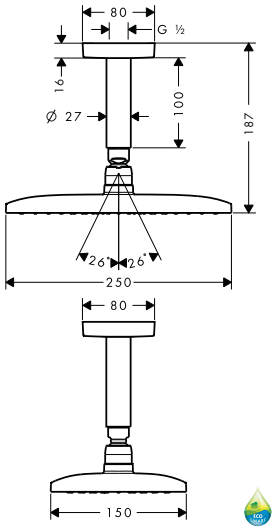

Raindance E Overhead shower 240 1jet with ceiling connector — Chrome — 27380000 — 479.30

Air Power · Quick Clean · XXL Performance

- consists of: overhead shower, ceiling connector
- spray type: RainAir
- shower head size: 250 x 150 mm
- ball-joint: overhead shower angle adjustable
- flow rate RainAir spray (at 3 bar): 20 l/min
- material spray disc: metal
- spray disc removable for cleaning
- brass ceilling connector
- ceiling connection length: 100 mm
- installation: ceiling
- connection thread G ½
- connection dimension: DN15

Water saving EcoSmart version:

- **Raindance E** Overhead shower 240 1jet EcoSmart 9 l/min with ceiling connector — Chrome — 27383000 — 483.80



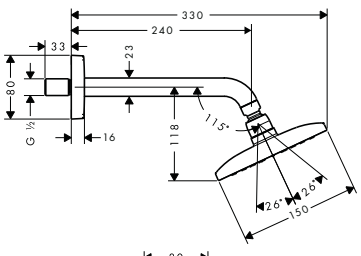

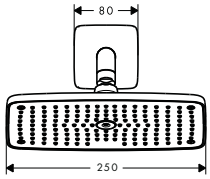

Raindance E Overhead shower 240 1jet with shower arm — Chrome — 27370000 — 517.40

Air Power · Quick Clean · XXL Performance

- consists of: overhead shower, shower arm
- spray type: RainAir
- shower head size: 250 x 150 mm
- shower arm length: 240 mm
- ball-joint: overhead shower angle adjustable
- flow rate RainAir spray (at 3 bar): 18 l/min
- material spray disc: metal
- spray disc removable for cleaning
- installation: wall
- connection thread G ½
- connection dimension: DN15

Water saving EcoSmart version:

- **Raindance E** Overhead shower 240 1jet EcoSmart 9 l/min with shower arm — Chrome — 27375000 — 522.00

Measurements within scale drawings are in mm.

Technical specifications and units of measure are subject to change.

Raindance S

	finish	code no.	Euro



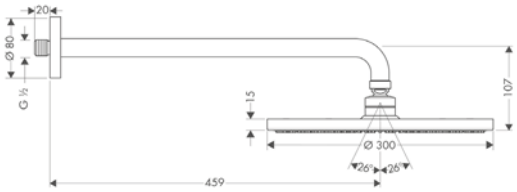

Raindance S Overhead shower 300 1jet with shower arm 46 cm — Chrome — 27492000 — 690.80

Air Power · Quick Clean · XXL Performance

- consists of: overhead shower, shower arm
- spray type: RainAir
- shower head size: 300 mm
- shower arm length: 460 mm
- ball-joint: overhead shower angle adjustable
- flow rate RainAir spray (at 3 bar): 18 l/min
- material spray disc: metal
- installation: wall
- connection thread G ½
- connection dimension: DN15



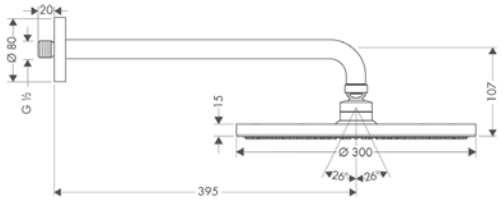

Raindance S Overhead shower 300 1jet with shower arm 39 cm — Chrome — 27493000 — 667.40

Air Power · Quick Clean · XXL Performance

- consists of: overhead shower, shower arm
- spray type: RainAir
- shower head size: 300 mm
- shower arm length: 390 mm
- ball-joint: overhead shower angle adjustable
- flow rate RainAir spray (at 3 bar): 18 l/min
- material spray disc: metal
- installation: wall
- connection thread G ½
- connection dimension: DN15

Water saving EcoSmart version:

Raindance S Overhead shower 300 1jet EcoSmart 9 l/min with shower arm — Chrome — 26601000 — 667.40



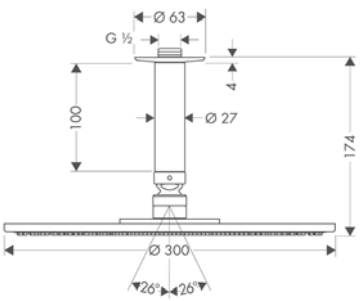

Raindance S Overhead shower 300 1jet with ceiling connector — Chrome — 27494000 — 630.70

Air Power · Quick Clean · XXL Performance

- consists of: overhead shower, ceiling connector
- spray type: RainAir
- shower head size: 300 mm
- ball-joint: overhead shower angle adjustable
- flow rate RainAir spray (at 3 bar): 20 l/min
- material spray disc: metal
- ceiling connection length: 100 mm
- installation: ceiling
- connection thread G ½
- connection dimension: DN15

Water saving EcoSmart version:

Raindance S Overhead shower 300 1jet EcoSmart 9 l/min with ceiling connector — Chrome — 26600000 — 630.70

Measurements within scale drawings are in mm.

Technical specifications and units of measure are subject to change.

	finish	code no.	Euro



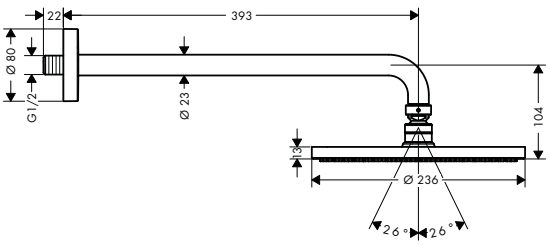

Raindance S Overhead shower 240 1jet PowderRain with shower arm

	finish	code no.	Euro
	Chrome	27607000	399.40

Quick Clean | XXL Performance

- consists of: overhead shower, shower arm
- spray type: PowderRain
- shower head size: 240 mm
- shower arm length: 390 mm
- ball-joint: overhead shower angle adjustable
- flow rate PowderRain spray (at 0.3 bar): 18 l/min
- material spray disc: metal
- installation: wall
- connection thread G ½
- connection dimension: DN15

Alternative products:

· **Raindance S** Overhead shower 240 1jet PowderRain with ceiling connector	Chrome	27620000	368.60
· **Raindance S** Overhead shower 240 1jet PowderRain	Chrome	27623000	337.90



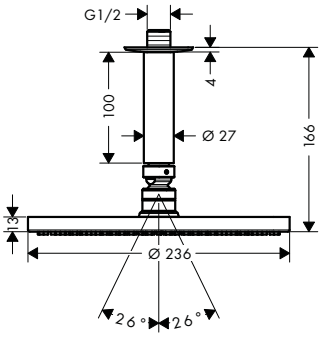

Raindance S Overhead shower 240 1jet PowderRain with ceiling connector

	finish	code no.	Euro
	Chrome	27620000	368.60

Quick Clean | XXL Performance

- consists of: overhead shower, ceiling connector
- spray type: PowderRain
- shower head size: 240 mm
- ball-joint: overhead shower angle adjustable
- flow rate PowderRain spray (at 0.3 bar): 18 l/min
- material spray disc: metal
- ceiling connection length: 100 mm
- installation: ceiling
- connection thread G ½
- connection dimension: DN15

Alternative products:

· **Raindance S** Overhead shower 240 1jet PowderRain with shower arm	Chrome	27607000	399.40
· **Raindance S** Overhead shower 240 1jet PowderRain	Chrome	27623000	337.90

Measurements within scale drawings are in mm.

Technical specifications and units of measure are subject to change.

	finish	code no.	Euro



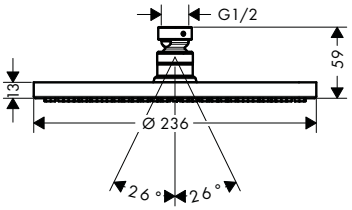

Raindance S Overhead shower 240 1jet PowderRain — Chrome — 27623000 — 337.90

Quick Clean · XXL Performance

- spray type: PowderRain
- shower head size: 240 mm
- ball-joint: overhead shower angle adjustable
- flow rate PowderRain spray (at 0.3 bar): 18 l/min
- material spray disc: metal
- installation: ceiling or wall
- connection thread G ½
- connection dimension: DN15

Alternative products:

- **Raindance S** Overhead shower 240 1jet PowderRain with shower arm — Chrome — 27607000 — 399.40
- **Raindance S** Overhead shower 240 1jet PowderRain with ceiling connector — Chrome — 27620000 — 368.60

Optional parts:

- Shower arm 38.9 cm — Chrome — 27413000 — 81.60
- Ceiling connector 10 cm — Chrome — 27479000 — 55.00



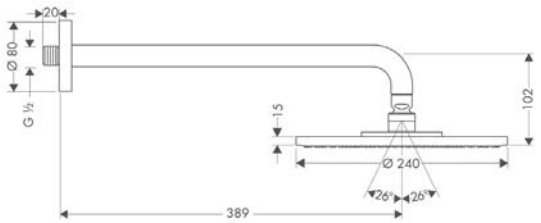

Raindance S Overhead shower 240 1jet with shower arm — Chrome — 27474000 — 556.80

Air Power · Quick Clean · XXL Performance

- consists of: overhead shower, shower arm
- spray type: RainAir
- shower head size: 240 mm
- shower arm length: 390 mm
- ball-joint: overhead shower angle adjustable
- flow rate RainAir spray (at 3 bar): 18 l/min
- material spray disc: metal
- installation: wall
- connection thread G ½
- connection dimension: DN15

Consisting of:

- Shower arm 38.9 cm (# 27413XXX)

Water saving EcoSmart version:

- **Raindance S** Overhead shower 240 1jet EcoSmart 9 l/min with shower arm — Chrome — 27461000 — 561.50

Measurements within scale drawings are in mm.

Technical specifications and units of measure are subject to change.

	finish	code no.	Euro



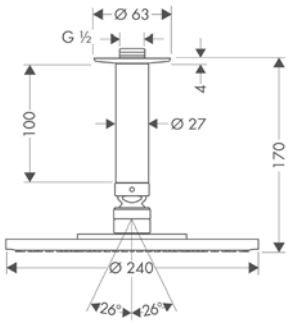

Raindance S Overhead shower 240 1jet with ceiling connector

Chrome 27477000 517.10

Air Power · Quick Clean · XXL Performance

- consists of: overhead shower, ceiling connector
- spray type: RainAir
- shower head size: 240 mm
- ball-joint: overhead shower angle adjustable
- flow rate RainAir spray (at 3 bar): 18 l/min
- material spray disc: metal
- ceiling connection length: 100 mm
- installation: ceiling
- connection thread G ½
- connection dimension: DN15

Water saving EcoSmart version:

- **Raindance S** Overhead shower 240 1jet EcoSmart 9 l/min with ceiling connector — Chrome 27463000 521.70



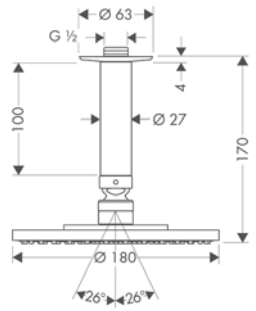

Raindance S Overhead shower 180 1jet with ceiling connector

Chrome 27478000 389.90

Air Power · Quick Clean · XXL Performance

- consists of: overhead shower, ceiling connector
- spray type: RainAir
- shower head size: 180 mm
- ball-joint: overhead shower angle adjustable
- flow rate RainAir spray (at 3 bar): 18 l/min
- material spray disc: metal
- ceiling connection length: 100 mm
- installation: ceiling
- connection thread G ½
- connection dimension: DN15

Water saving EcoSmart version:

- **Raindance S** Overhead shower 180 1jet EcoSmart 9 l/min with ceiling connector — Chrome 27464000 394.60

Raindance Classic



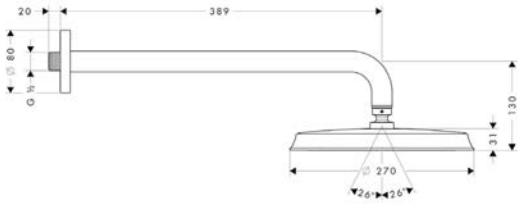

Raindance Classic Overhead shower 240 1jet with shower arm

Chrome 27424000 653.10
Chrome/Gold Optic 27424090 816.30

Air Power · Quick Clean · XXL Performance

- consists of: overhead shower, shower arm
- spray type: RainAir
- shower head size: 240 mm
- shower arm length: 390 mm
- ball-joint: overhead shower angle adjustable
- flow rate RainAir spray (at 3 bar): 19 l/min
- material spray disc: metal
- installation: wall
- connection thread G ½
- connection dimension: DN15

Measurements within scale drawings are in mm.

Technical specifications and units of measure are subject to change.

	finish	code no.	Euro



Raindance Classic Overhead shower 240 1jet with ceiling connector

- consists of: overhead shower, ceiling connector
- spray type: RainAir
- shower head size: 240 mm
- ball-joint: overhead shower angle adjustable
- flow rate RainAir spray (at 3 bar): 19 l/ min
- material spray disc: metal
- ceiling connection length: 100 mm
- installation: ceiling
- connection thread G ½
- connection dimension: DN15

Chrome	27405000	614.00
Chrome/Gold Optic	27405090	767.50

Air Power · Quick Clean · XXL Performance

Croma Select E



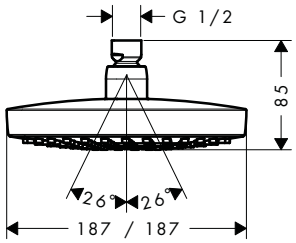

Croma Select E Overhead shower 180 2jet

- spray type: Rain, IntenseRain
- ball-joint: overhead shower angle adjustable
- flow rate Rain spray (at 3 bar): 17 l/ min
- flow rate IntenseRain spray (at 3 bar): 16 l/ min
- Select button on overhead shower
- spray disc surface in two variants: chrome or white
- material spray disc: plastic
- installation: ceiling or wall
- connection thread G ½
- connection dimension: DN15

Chrome	26524000	234.80
White/Chrome	26524400	234.80

Select · Quick Clean · XXL Performance

Water saving EcoSmart version:

Croma Select E Overhead shower 180 2jet EcoSmart 9 l/ min	Chrome	26528000	234.80
	White/Chrome	26528400	234.80

Optional parts:

Shower arm E 38.9 cm	Chrome	27446000	81.60
Ceiling connector E 10 cm	Chrome	27467000	55.00



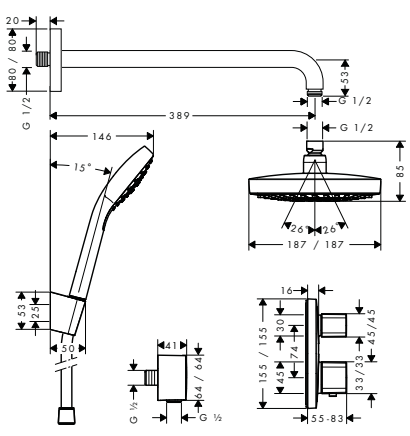

Croma Select E Shower system for concealed installation with Ecostat E thermostat

Chrome	27294000	800.90

- consists of: overhead shower, hand shower, shower thermostat, basic set, shower arm, shower holder, wall outlet, shower hose
- maximum flow rate at 3 bar: 17 l/ min

Consisting of:

- **Croma Select E** Overhead shower 180 2jet (# 26524XXX)
- **Croma Select E** Hand shower 1jet (# 26814400)
- Shower arm E 38.9 cm (# 27446000)
- **Isiflex** Shower hose 125 cm (# 28272XXX)
- Shower holder Porter S (# 28331XXX)
- **FixFit** Wall outlet with non-return valve (# 26457XXX)
- **Ecostat E** Thermostat for concealed installation for 2 functions (# 15708000)
- Basic set iBox universal (# 01800180)

Measurements within scale drawings are in mm.

Technical specifications and units of measure are subject to change.

Croma Select S

	finish	code no.	Euro



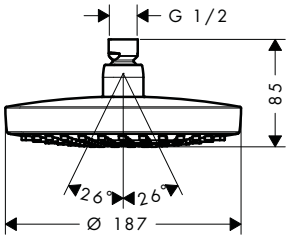

Croma Select S Overhead shower 180 2jet

- spray type: Rain, IntenseRain
- shower head size: 180 mm
- ball-joint: overhead shower angle adjustable
- flow rate Rain spray (at 3 bar): 17 l/min
- flow rate IntenseRain spray (at 3 bar): 16 l/min
- Select button on overhead shower
- spray disc surface in two variants: chrome or white
- material spray disc: plastic
- installation: ceiling or wall
- connection thread G ½
- connection dimension: DN15

	finish	code no.	Euro
	Chrome	26522000	234.80
	White/Chrome	26522400	234.80

Water saving EcoSmart version:

	finish	code no.	Euro
· **Croma Select S** Overhead shower 180 2jet EcoSmart 9 l/min	Chrome	26523000	234.80
	White/Chrome	26523400	234.80

Optional parts:

	finish	code no.	Euro
· Shower arm 38.9 cm	Chrome	27413000	81.60
· Ceiling connector 10 cm	Chrome	27479000	55.00





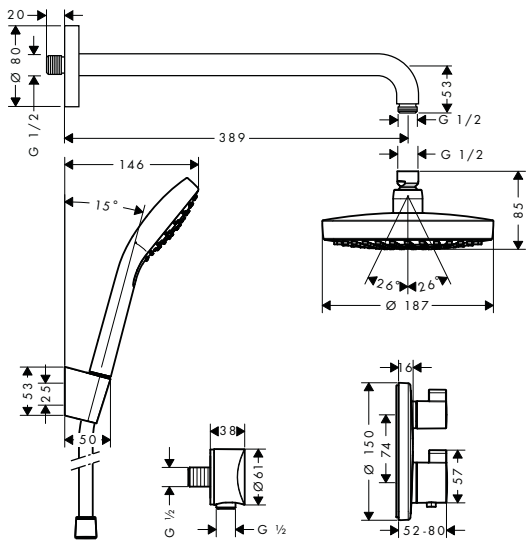

Croma Select S Shower system for concealed installation with Ecostat S thermostat

	finish	code no.	Euro
	Chrome	27295000	800.90

- consists of: overhead shower, hand shower, shower thermostat, basic set, shower arm, shower holder, wall outlet, shower hose
- maximum flow rate at 3 bar: 17 l/min

Consisting of:

- **Croma Select S** Overhead shower 180 2jet (# 26522XXX)
- Shower arm 38.9 cm (# 27413XXX)
- **Croma Select S** Hand shower 1jet (# 26804400)
- **Isiflex** Shower hose 125 cm (# 28272XXX)
- Shower holder Porter S (# 28331XXX)
- **FixFit** Wall outlet S without non-return valve (# 27453000)
- **Ecostat S** Thermostat for concealed installation for 2 functions (# 15758XXX)
- Basic set iBox universal (# 01800180)

Measurements within scale drawings are in mm.

Technical specifications and units of measure are subject to change.

Croma E



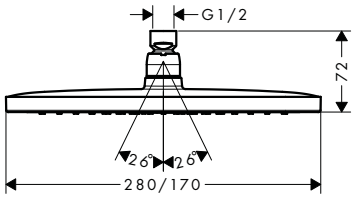

	finish	code no.	Euro
Croma E Overhead shower 280 1jet	Chrome	26257000	315.00
· spray type: RainAir · shower head size: 280 x 170 mm · ball-joint: overhead shower angle adjustable · maximum flow rate at 3 bar: 18.3 l/min · flow rate RainAir spray (at 3 bar): 18 l/min · material spray disc: metal · spray disc removable for cleaning · installation: ceiling or wall · connection thread G ½ · connection dimension: DN15			
Water saving EcoSmart version:			
· **Croma E** Overhead shower 280 1jet EcoSmart	Chrome	26258000	315.00
Optional parts:			
· Ceiling connector E 30 cm	Chrome	27388000	78.60
· Ceiling connector E 10 cm	Chrome	27467000	55.00
· Shower arm E 38.9 cm	Chrome	27446000	81.60

Croma



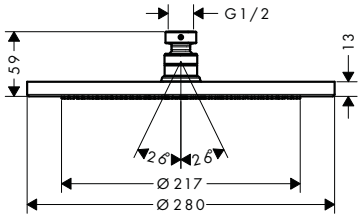

	finish	code no.	Euro
Croma Overhead shower 280 1jet	Chrome	26220000	315.40
	Brushed Bronze	26220140	473.10
	Brushed Black Chrome	26220340	473.10
	Matt Black	26220670	441.60
	Matt White	26220700	441.60
	Polished Gold Optic	26220990	473.10
· spray type: RainAir · shower head size: 280 mm · ball-joint: overhead shower angle adjustable · maximum flow rate at 3 bar: 15 l/min · flow rate RainAir spray (at 3 bar): 15 l/min · material spray disc: metal · spray disc removable for cleaning · installation: ceiling or wall · connection thread G ½ · connection dimension: DN15			
Water saving EcoSmart version:			
· **Croma** Overhead shower 280 1jet EcoSmart 9 l/min	Chrome	26221000	317.40
	Brushed Bronze	26221140	476.10
	Brushed Black Chrome	26221340	476.10
	Matt Black	26221670	444.40
	Matt White	26221700	444.40
	Polished Gold Optic	26221990	476.10
Optional parts:			
· Shower arm 38.9 cm	Chrome	27413000	81.60
	Brushed Bronze	27413140	122.40
	Brushed Black Chrome	27413340	122.40
	Matt Black	27413670	114.20
	Matt White	27413700	114.20
	Polished Gold Optic	27413990	122.40
· Ceiling connector 10 cm	Chrome	27479000	55.00

Measurements within scale drawings are in mm.

Technical specifications and units of measure are subject to change.

	finish	code no.	Euro



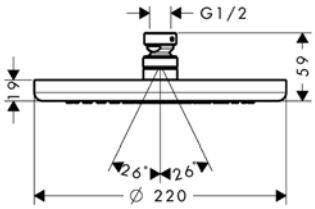

Croma Overhead shower 220 1jet

Chrome 26464000 221.00

Air Power · Quick Clean · XXL Performance

- spray type: RainAir
- shower head size: 220 mm
- ball-joint: overhead shower angle adjustable
- flow rate RainAir spray (at 3 bar): 19 l/min
- material spray disc: metal
- spray disc removable for cleaning
- installation: ceiling or wall
- connection thread G ½
- connection dimension: DN15

Water saving EcoSmart version:

- **Croma** Overhead shower 220 1jet EcoSmart 9 l/min — Chrome — 26465000 — 221.00

Alternative products:

- **Croma** Overhead shower 220 1jet LowPressure — Chrome — 26734000 — 221.00

Optional parts:

- Shower arm 38.9 cm — Chrome — 27413000 — 81.60
- Ceiling connector 10 cm — Chrome — 27479000 — 55.00



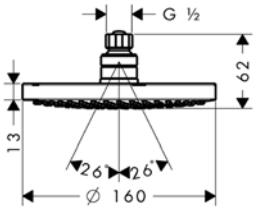

Croma Overhead shower 160 1jet

Chrome 27450000 197.60

Quick Clean · XXL Performance

- spray type: Rain
- shower head size: 160 mm
- ball-joint: overhead shower angle adjustable
- flow rate Rain spray (at 3 bar): 17 l/min
- material spray disc: plastic
- installation: ceiling or wall
- connection thread G ½
- connection dimension: DN15

Optional parts:

- Shower arm 23 cm — Chrome — 27412000 — 57.70
- Ceiling connector 10 cm — Chrome — 27479000 — 55.00



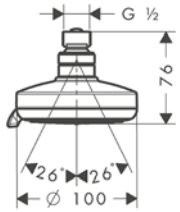

Croma 100 Overhead shower Multi

Chrome 27443000 76.00

Quick Clean · XXL Performance

- spray type: Rain, MonoRain, Massage spray
- shower head size: 100 mm
- ball-joint: overhead shower angle adjustable
- flow rate Rain spray (at 3 bar): 20 l/min
- flow rate Mono spray (at 3 bar): 15 l/min
- flow rate massage spray (at 3 bar): 14 l/min
- adjustment with shift on overhead shower
- grey spray disc
- material spray disc: plastic
- installation: ceiling or wall
- connection thread G ½
- connection dimension: DN15

Optional parts:

- Shower arm 12.8 cm — Chrome — 27411000 — 21.10

Measurements within scale drawings are in mm.

Technical specifications and units of measure are subject to change.

	finish	code no.	Euro
Croma 100 Overhead shower Vario	Chrome	27441000	48.60



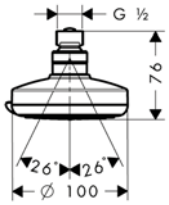

- spray type: Rain, Shampoo spray, normal spray, Massage spray
- shower head size: 100 mm
- ball-joint: overhead shower angle adjustable
- flow rate Rain spray (at 3 bar): 22 l/min
- flow rate shampoo spray (at 3 bar): 17 l/min
- flow rate normal spray (at 3 bar): 20 l/min
- flow rate massage spray (at 3 bar): 11 l/min
- adjustment with shift on overhead shower
- grey spray disc
- material spray disc: plastic
- installation: ceiling or wall
- connection thread G ½
- connection dimension: DN15

Water saving EcoSmart version:

· **Croma 100** Overhead shower Vario EcoSmart 9 l/min	Chrome	28462000	55.60

Optional parts:

· Shower arm 12.8 cm	Chrome	27411000	21.10

Crometta E

Crometta E Overhead shower 240 1jet	Chrome	26726000	198.40



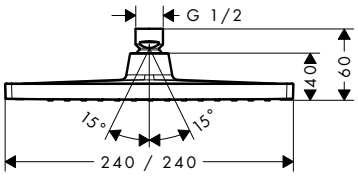

- spray type: Rain
- shower head size: 240 x 240 mm
- ball-joint: overhead shower angle adjustable
- flow rate Rain spray (at 3 bar): 18 l/min
- material spray disc: plastic
- installation: ceiling or wall
- connection thread G ½
- connection dimension: DN15

Water saving EcoSmart version:

· **Crometta E** Overhead shower 240 1jet EcoSmart 9 l/min	Chrome	26727000	200.50

Alternative products:

· **Crometta E** Overhead shower 240 1jet LowPressure	Chrome	26722000	198.40

Optional parts:

· Shower arm E 38.9 cm	Chrome	27446000	81.60
· Ceiling connector E 10 cm	Chrome	27467000	55.00

Measurements within scale drawings are in mm.

Technical specifications and units of measure are subject to change.

Crometta S



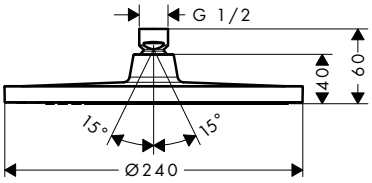

	finish	code no.	Euro
Crometta S Overhead shower 240 1jet · spray type: Rain · shower head size: 240 mm · ball-joint: overhead shower angle adjustable · flow rate Rain spray (at 3 bar): 18 l/min · material spray disc: plastic · installation: ceiling or wall · connection thread G ½ · connection dimension: DN15	Chrome	26723000	198.40
Water saving EcoSmart version: · **Crometta S** Overhead shower 240 1jet EcoSmart 9 l/min	Chrome	26724000	200.50
Alternative products: · **Crometta S** Overhead shower 240 1jet LowPressure	Chrome	26725000	198.40
Optional parts:			
· Shower arm 38.9 cm	Chrome	27413000	81.60
· Ceiling connector S 10 cm	Chrome	27393000	55.20

Crometta



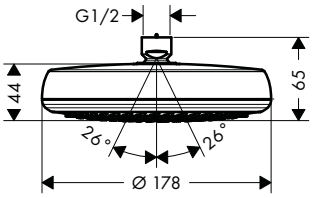

	finish	code no.	Euro
Crometta Overhead shower 160 1jet · spray type: Rain · shower head size: 160 mm · ball-joint: overhead shower angle adjustable · flow rate Rain spray (at 3 bar): 20 l/min · spray disc surface in two variants: chrome or white · material spray disc: plastic · installation: ceiling or wall · connection thread G ½ · connection dimension: DN15	Chrome White/Chrome	26577000 26577400	139.60 139.60
Water saving EcoSmart version: · **Crometta** Overhead shower 160 1jet EcoSmart 9 l/min	Chrome White/Chrome	26578000 26578400	139.60 139.60
Alternative products: · **Crometta** Overhead shower 160 1jet LowPressure	White/Chrome	26576400	139.60
Optional parts:			
· Shower arm 23 cm	Chrome	27412000	57.70
· Ceiling connector 10 cm	Chrome	27479000	55.00

Measurements within scale drawings are in mm.

Technical specifications and units of measure are subject to change.

Crometta 85

	finish	code no.	Euro



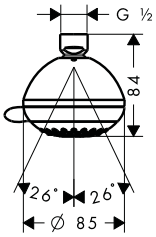

Crometta 85 Overhead shower Multi — Chrome — 28425000 — 53.50

Quick Clean

- spray type: MonoRain, normal spray, Massage spray
- shower head size: 85 mm
- ball-joint: overhead shower angle adjustable
- flow rate Mono spray (at 3 bar): 13 l/ min
- flow rate normal spray (at 3 bar): 15 l/ min
- flow rate massage spray (at 3 bar): 13 l/ min
- adjustment with shift on overhead shower
- grey spray disc
- material spray disc: plastic
- installation: ceiling or wall
- connection thread G ½
- connection dimension: DN15

Optional parts:

- Shower arm 12.8 cm — Chrome — 27411000 — 21.10



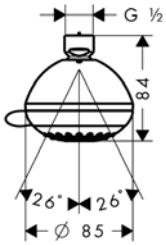

Crometta 85 Overhead shower Vario — Chrome — 28424000 — 43.10

Quick Clean

- spray type: normal spray, Vario spray
- shower head size: 85 mm
- ball-joint: overhead shower angle adjustable
- flow rate normal spray (at 3 bar): 18 l/ min
- flow rate Vario spray (at 3 bar): 14 l/ min
- adjustment with shift on overhead shower
- grey spray disc
- material spray disc: plastic
- installation: ceiling or wall
- connection thread G ½
- connection dimension: DN15

Optional parts:

- Shower arm 12.8 cm — Chrome — 27411000 — 21.10



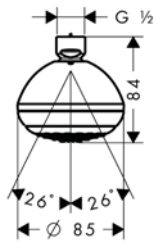

Crometta 85 Overhead shower 1jet Green 6 l/ min — Chrome — 28423000 — 42.60

Eco Smart

Quick Clean

- spray type: normal spray
- shower head size: 85 mm
- ball-joint: overhead shower angle adjustable
- flow rate normal spray (at 3 bar): 5.7 l/ min
- grey spray disc
- material spray disc: plastic
- installation: ceiling or wall
- connection thread G ½
- connection dimension: DN15

Optional parts:

- Shower arm 12.8 cm — Chrome — 27411000 — 21.10

Measurements within scale drawings are in mm.

Technical specifications and units of measure are subject to change.

Clubmaster



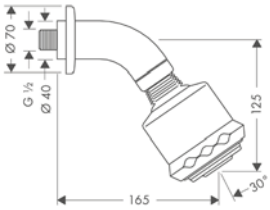

	finish	code no.	Euro
Clubmaster Overhead shower 3jet with shower arm · consists of: overhead shower, shower arm · spray type: Soft spray, normal spray, Massage spray · shower head size: 85 mm · shower arm length: 165 mm · ball-joint: overhead shower angle adjustable · flow rate soft spray (at 3 bar): 17 l/min · flow rate normal spray (at 3 bar): 19 l/min · flow rate massage spray (at 3 bar): 12 l/min · grey spray disc · material spray disc: plastic · installation: wall · connection thread G ½ · connection dimension: DN15	Chrome	27475000	257.50
Consisting of: · Shower arm 10 cm (# 27438000) · **Clubmaster** Overhead shower 3jet (# 28496000)			
Water saving EcoSmart version: · **Clubmaster** Overhead shower 3jet EcoSmart 9 l/min with shower arm	Chrome	26606000	257.50



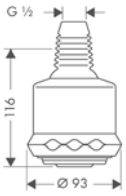

Clubmaster Overhead shower 3jet · spray type: Soft spray, normal spray, Massage spray · shower head size: 85 mm · ball-joint: overhead shower angle adjustable · flow rate soft spray (at 3 bar): 17 l/min · flow rate normal spray (at 3 bar): 19 l/min · flow rate massage spray (at 3 bar): 12 l/min · adjustment with shift on overhead shower · grey spray disc · material spray disc: plastic · installation: wall · connection thread G ½ · connection dimension: DN15	Chrome	28496000	199.50
Optional parts:			
· Shower arm 10 cm	Chrome	27438000	70.30
· Shower arm 12.8 cm	Chrome	27411000	21.10

Shower arms for overhead showers



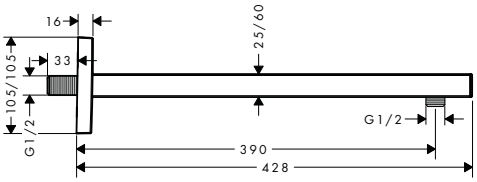

Shower arm square 38.9 cm · length: 390 mm · wall-mounted · installation type: exposed installation · connection thread G ½ · connection dimension DN15	Chrome	27694000	182.30
	Brushed Bronze*	27694140	273.50
	Brushed Black Chrome*	27694340	273.50
	Matt Black*	27694670	255.20
	Matt White	27694700	255.20
	Polished Gold Optic*	27694990	273.50

*** available from January 2021**

Measurements within scale drawings are in mm.

Technical specifications and units of measure are subject to change.

Overhead showers

	finish	code no.	Euro
 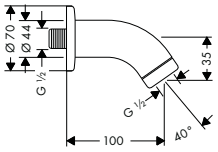	**Shower arm 10 cm** · length: 100 mm · wall-mounted · installation type: exposed installation · connection thread G ½ · connection dimension DN15	Chrome	27438000	70.30
	Optional parts: · **Clubmaster** Overhead shower 3jet	Chrome	28496000	199.50
 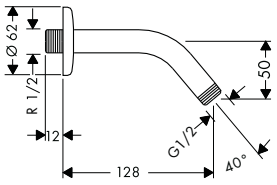	**Shower arm 12.8 cm** · length: 128 mm · wall-mounted · installation type: exposed installation · connection thread G ½ · connection dimension DN15	Chrome	27411000	21.10
 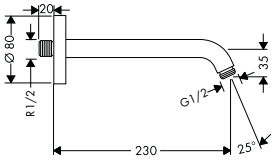	**Shower arm 23 cm** · length: 230 mm · wall-mounted · installation type: exposed installation · connection thread G ½ · connection dimension DN15	Chrome	27412000	57.70
 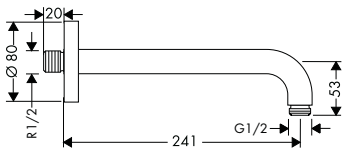	**Shower arm 24.1 cm** · length: 241 mm · wall-mounted · installation type: exposed installation · version: 90° angle · connection thread G ½ · connection dimension DN15	Chrome	27409000	57.70
 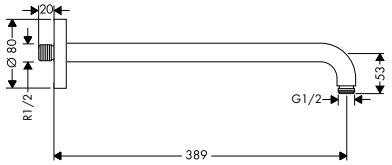	**Shower arm 38.9 cm** · length: 389 mm · wall-mounted · installation type: exposed installation · version: 90° angle · connection thread G ½ · connection dimension DN15	Chrome Brushed Bronze Brushed Black Chrome Matt Black Matt White Polished Gold Optic	27413000 27413140 27413340 27413670 27413700 27413990	81.60 122.40 122.40 114.20 114.20 122.40
 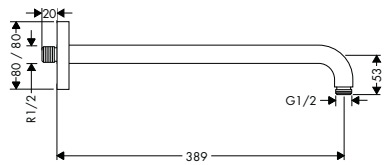	**Shower arm E 38.9 cm** · length: 389 mm · wall-mounted · installation type: exposed installation · version: 90° angle · connection thread G ½ · connection dimension DN15	Chrome	27446000	81.60

Measurements within scale drawings are in mm.

Technical specifications and units of measure are subject to change.

Ceiling connectors for overhead showers

	finish	code no.	Euro
Ceiling connector 10 cm · length: 100 mm · shaft Ø: 27 mm · purpose of use: also usable as an extension · ceiling · installation type: exposed installation · connection thread G ½ · connection dimension G ½	Chrome	27479000	55.00
Ceiling connector S 10 cm · length: 100 mm · shaft Ø: 27 mm · purpose of use: also usable as an extension · installation type: exposed installation · connection thread G ½ · connection dimension DN15	Chrome Brushed Bronze Brushed Black Chrome Matt Black Matt White Polished Gold Optic	27393000 27393140 27393340 27393670 27393700 27393990	55.20 82.80 82.80 77.30 77.30 82.80
Ceiling connector S 30 cm · length: 300 mm · shaft Ø: 27 mm · ceiling · installation type: exposed installation · connection thread G ½ · connection dimension DN15	Chrome Brushed Bronze Brushed Black Chrome Matt Black Matt White Polished Gold Optic	27389000 27389140 27389340 27389670 27389700 27389990	78.60 118.30 118.30 110.60 110.60 118.30
Ceiling connector E 10 cm · length: 100 mm · shaft Ø: 27 mm · purpose of use: also usable as an extension · installation type: exposed installation · connection thread G ½ · connection dimension DN15	Chrome	27467000	55.00
Ceiling connector E 30 cm · length: 100 mm · shaft Ø: 27 mm · installation type: exposed installation · connection thread G ½ · connection dimension DN15	Chrome	27388000	78.60

Measurements within scale drawings are in mm.

Technical specifications and units of measure are subject to change.

Body showers

	finish	code no.	Euro



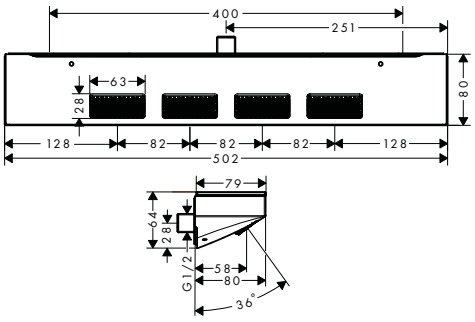

Rainfinity Shoulder shower 500 1jet with shower shelf

Chrome	26243000	455.90
Matt White	26243700	592.60

Quick Clean · XXL Performance

- shower head size: 502 x 81 mm
- spray type: PowderRain
- spray area: 309 x 28 mm
- field of application: functions as overhead, shoulder or side shower
- maximum flow rate at 3 bar: 13 l/min
- connection thread: G ½
- connection dimension: DN15
- material: metal
- shelf made of safety glass
- surface of the shelf at colour variant -000 = mirror glass, at colour variant -700 = graphite colour, satined



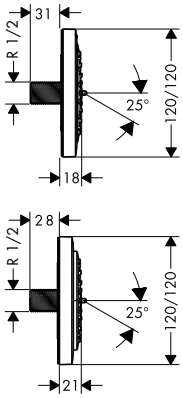

PuraVida Body shower 100 1jet

Chrome	28430000	140.40
White/Chrome	28430400	140.40

Air Power · Quick Clean · XXL Performance

- shower head size: 100 mm
- spray type: RainAir
- spray type adjustment by turning spray disc
- 360° range of rotation
- rosette: angular
- flow rate RainAir spray (at 3 bar): 4.5 l/min
- connection thread: G ½
- connection dimension: DN15



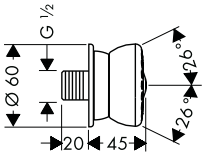

Bodyvette Body shower 1jet

Chrome	28466000	99.10

Quick Clean

- spray type: normal spray
- ball-joint: side shower angle adjustable
- rosette: circular
- flow rate normal spray (at 3 bar): 6 l/min
- grey spray disc
- connection thread: G ½
- connection dimension: DN15

Alternative products:

· **Bodyvette** Body shower 1jet stop	Chrome	28467000	114.80

Measurements within scale drawings are in mm.

Technical specifications and units of measure are subject to change.

Showerpipes and shower panels



Rainmaker Select Showerpipes	page 178		Rainfinity Showerpipes	page 180	
Raindance Select E Showerpipes	page 181		Raindance Select S Showerpipes	page 188	
Croma Select E Showerpipes	page 193		Croma Select S Showerpipes	page 196	
Croma E	page 203		Croma Showerpipes	page 205	
Crometta Showerpipes	page 215		Raindance shower panel	page 216	

hansgrohe Showerpipes

Selected Showerpipes at a glance

		Rainmaker® Select	**Rainfinity®**	**Raindance®**		
						
		Rainmaker® Select Showerpipe 460 3jet	**Rainfinity®** Showerpipe 360 1jet	**Raindance® Select E** Showerpipe 300 3jet	**Raindance® E** Showerpipe 300 1jet	**Raindance® Select S** Showerpipe 300 2jet
Versions	Shower with thermostat	27106, -400	26842, -000, -700	27127, -000, -400	27363, -000, -400	27133, -000, -400
	EcoSmart 9 l/min shower with thermostatic mixer	27029, -400			27364, -000, -400	
	Shower with single lever mixer					
	Bath with thermostat					
	Reno bath/shower					
Overhead shower	Overhead shower	Rainmaker Select Overhead shower 460 3jet	Rainfinity Overhead shower 360 1jet	Raindance Select E Overhead shower 300 3jet	Raindance E 300 Overhead shower 1jet	Raindance Select S Overhead shower 300 2jet
	Size of shower head	460 x 300 mm	360 mm	300 x 190 mm	300 x 300 mm	300 mm
	Spray modes (l/min in the standard version)	Rain 27 l/min RainStream 27 l/min Mono 27 l/min	PowderRain 19.6 l/min	Rain 16 l/min RainAir 16 l/min RainStream 19 l/min	RainAir 13 l/min	Rain 15 l/min RainAir 15 l/min
Hand shower	Hand shower	Raindance Select S Hand shower 120 3jet	Rainfinity Hand shower 130 3jet	Raindance Select E Hand shower 120 3jet	Raindance Select S Hand shower 120 3jet	Raindance Select S Hand shower 120 3jet
	Spray modes (l/min in the standard version)	RainAir 15 l/min Rain 15 l/min Whirl 15 l/min	PowderRain 10,6 l/min Intense PowderRain 10,6 l/min MonoRain 10,6 l/min	RainAir 15 l/min Rain 15 l/min Whirl 15 l/min	RainAir 15 l/min Rain 15 l/min Whirl 15 l/min	RainAir 15 l/min Rain 15 l/min Whirl 15 l/min
Features	Thermostat	ShowerTablet Select 700		ShowerTablet Select 300	ShowerTablet 600	Ecostat Comfort
	Shower hose	■	■	■	■	■
	Swivel shower arm		10–30°		90°	■
	Length of shower arm	450 mm			405 mm	460 mm
	Height of the Showerpipe can be reduced					■
Uniques	Select	■	■	■	■	■
	AirPower			■	■	■
	CoolContact	■		■	■	
	XXL Performance	■	■	■	■	■
	QuickClean	■	■	■	■	■

■ Available

	Croma®				**Crometta®**	
						
Raindance® Select S Showerpipe 240 1jet P	**Croma® Select E** Showerpipe 180 2jet	**Croma® Select S** Showerpipe 280 1jet	**Croma® E** Showerpipe 280 1jet	**Croma®** Showerpipe 220 1jet	**Crometta® E** Showerpipe 240 1jet	**Crometta®** Showerpipe 160 1jet
27633, -XXX	27256, -400	26790, -000	27630, -000	27185, -000	27271, -000	27264, -400
	27257, -400	26794, -000	27660, -000	27188, -000	27281, -000	27265, -400
	27258, -400	26791, -000		27222, -000	27284, -000	27266, -400
	27352, -400	26792, -000	27687, -000	27223, -000	27298, -000	
		26793, -000		27224, -000	27289, -000	
Raindance S Overhead shower 240 1jet P	Croma Select E Overhead shower 180 2jet	Croma Overhead shower 280 1jet	Croma E Overhead shower 280 1jet	Croma Overhead shower 220 1jet	Crometta E Overhead shower 240 1jet	Crometta Overhead shower 160 1jet
240 mm	180 x 180 mm	280 mm	280 mm	220 mm	240 x 240 mm	160 mm
PowderRain 16 l/min	Rain 16 l/min IntenseRain 16 l/min	RainAir 16 l/min	RainAir 15 l/min	RainAir 15 l/min	Rain 15 l/min	Rain 17 l/min
Raindance Select S Hand shower 120 3jet P	Croma Select E Hand shower Multi	Croma Select S Hand shower Multi	Croma Select E Hand shower Multi	Croma 100 Hand shower Vario	Crometta Hand shower Vario	Crometta 100 Hand shower Vario
Rain 12 l/min Whirl 12 l/min PowderRain 12 l/min	Massage 16 l/min IntenseRain 16 l/min SoftRain 16 l/min	Massage 16 l/min IntenseRain 16 l/min SoftRain 16 l/min	Massage 16 l/min IntenseRain 16 l/min SoftRain 16 l/min	Rain 18 l/min Massage 18 l/min	Rain 14 l/min IntenseRain 14 l/min	Rain 18 l/min Massage 18 l/min
Ecostat Comfort	Ecostat Comfort	Ecostat Comfort	Ecostat E	Ecostat Comfort	Ecostat 1001 CL	Ecostat Universal
■	■	■	■	■		■
■	■	■	■	■		■
460 mm	400 mm	400 mm		400 mm	350 mm	350 mm
		■		■	■	■
■	■					
		■	■	■		
			■			
■	■	■	■	■	■	■
■	■	■	■	■	■	■

All specified flow rates are based on an operating pressure of **0.3** MPa (3 bar).

Rainmaker Select Showerpipes



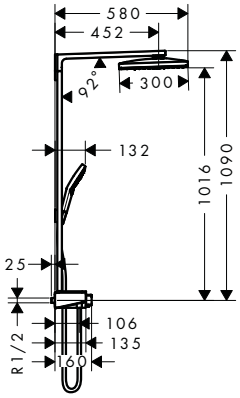

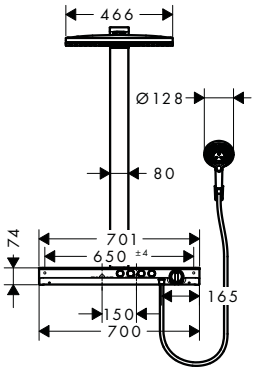

	finish	code no.	Euro
Rainmaker Select Showerpipe 460 3jet with thermostat	White/Chrome	27106400	3,666.00

Cool Contact · Select · Quick Clean · XXL Performance

- consists of: overhead shower, hand shower, shower thermostat, shower hose, shower holder
- overhead shower Rainmaker Select 460 3jet
- shower head size: 460 x 300 mm
- spray type: Rain, MonoRain, RainStream
- convenient diversion via Select button
- easy cleanable glass spray disc
- shelf made of safety glass
- shelf finish: white
- shower arm length: 450 mm
- maximum flow rate at 3 bar: 27 l/ min
- operating pressure: min. 1,5 bar/ max. 10 bar
- CoolContact thermostat: Prevents the housing from heating up, making showering even safer
- thermostat ShowerTablet Select 700
- isolated water conduction
- safety lock at 40° C
- adjustable hot water limitation
- convenient diversion via Select button
- simultaneous utilization by 4 outlets
- installation type: exposed installation
- connection dimension DN15
- connection thread G ½
- centre distance 150 ± 18 mm

Consisting of:

- Shower holder Porter S (# 28331XXX)
- **Isiflex** Shower hose 160 cm (# 28276XXX)
- **Raindance Select S** Hand shower 120 3jet (# 26530XXX)

Water saving EcoSmart version:

Rainmaker Select Showerpipe 460 3jet EcoSmart 9 l/ min with thermostat	White/Chrome	27029400	3,666.00

Measurements within scale drawings are in mm.

Technical specifications and units of measure are subject to change.

	finish	code no.	Euro
Rainmaker Select Showerpipe 460 2jet with thermostat	White/Chrome	27109400	3,207.80



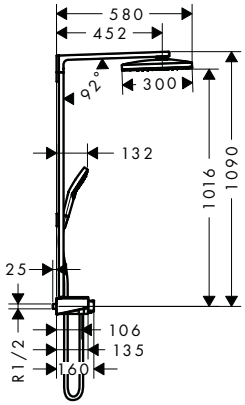

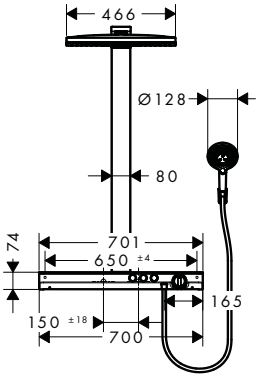

- consists of: overhead shower, hand shower, shower thermostat, shower hose, shower holder
- overhead shower Rainmaker Select 460 2jet
- shower head size: 460 x 300 mm
- spray type: Rain, RainStream
- easy cleanable glass spray disc
- shelf made of safety glass
- shelf finish: white
- shower arm length: 450 mm
- maximum flow rate at 3 bar: 19 l/ min
- operating pressure: min. 1,5 bar/ max. 10 bar
- CoolContact thermostat: Prevents the housing from heating up, making showering even safer
- thermostat ShowerTablet Select 700
- isolated water conduction
- safety lock at 40° C
- adjustable hot water limitation
- convenient diversion via Select button
- simultaneous utilization by 3 outlets
- installation type: exposed installation
- connection dimension DN15
- connection thread G ½
- centre distance 150 ± 18 mm

Consisting of:

- **Raindance Select S** Hand shower 120 3jet (# 26530XXX)
- **Isiflex** Shower hose 160 cm (# 28276XXX)
- Shower holder Porter S (# 28331XXX)

Water saving EcoSmart version:

	finish	code no.	Euro
Rainmaker Select Showerpipe 460 2jet EcoSmart 9 l/ min with thermostat	White/Chrome	27028400	3,207.80

Measurements within scale drawings are in mm.

Technical specifications and units of measure are subject to change.

Rainfinity Showerpipe



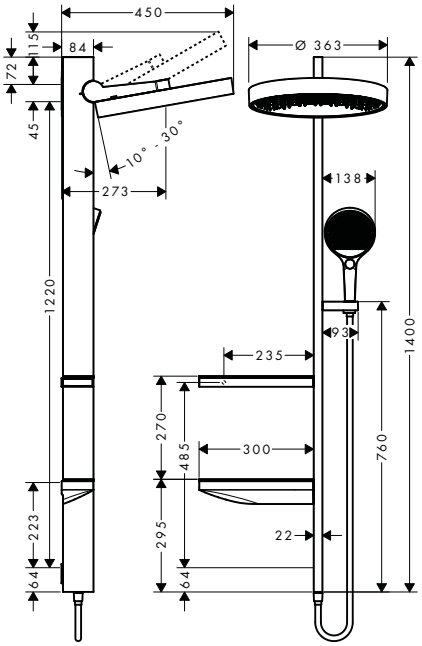

	finish	code no.	Euro
Rainfinity Showerpipe 360 1jet for concealed installation	Chrome	26842000	1,266.30
	Matt White	26842700	1,646.10

Select · Quick Clean · XXL Performance

- consists of: overhead shower, hand shower, shower hose, shower holder, 2 glass shelves
- overhead shower Rainfinity 360 1jet
- shower head size: 360 mm
- spray type: PowderRain
- spray disc surface: graphite
- shower holder inclination angle can be adjusted continously
- shower arm vertically inclinable by 10-30°
- shelf made of safety glass
- surface of the shelf at colour variant -000 = mirror glass, at colour variant -700 = graphite colour, satined
- requires a mixer for 2 functions
- maximum flow rate at 3 bar: 19.6 l/min
- operating pressure: min. 2,4 bar/ max. 6 bar
- installation type: exposed installation
- isolated water conduction
- water connection: in the lower shelf, covert
- connection dimension: DN15
- connection thread G ½

Consisting of:

- **Rainfinity** Hand shower 130 3jet (# 26864XXX)
- **Isiflex** Shower hose 160 cm (# 28276XXX)

Required parts:

· **Rainfinity** Basic set for showerpipe 360 1jet for concealed installation		26840180	111.40
· **RainSelect** Thermostat for concealed installation for 2 functions	Chrome	15380000	1,078.90
	Matt White	15380700	1,402.50



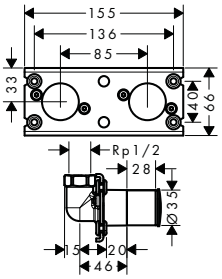

Rainfinity Basic set for showerpipe 360 1jet for concealed installation		26840180	111.40

- suitable for Showerpipe 360 1jet for concealed installation
- sound-decoupled installation
- The position of the connections is given, thus easy installation
- easy mounting
- connection dimension: G ½

Optional parts:

· **Rainfinity** Showerpipe 360 1jet for concealed installation	Chrome	26842000	1,266.30
	Matt White	26842700	1,646.10

Measurements within scale drawings are in mm.

Technical specifications and units of measure are subject to change.

Raindance Select E Showerpipes



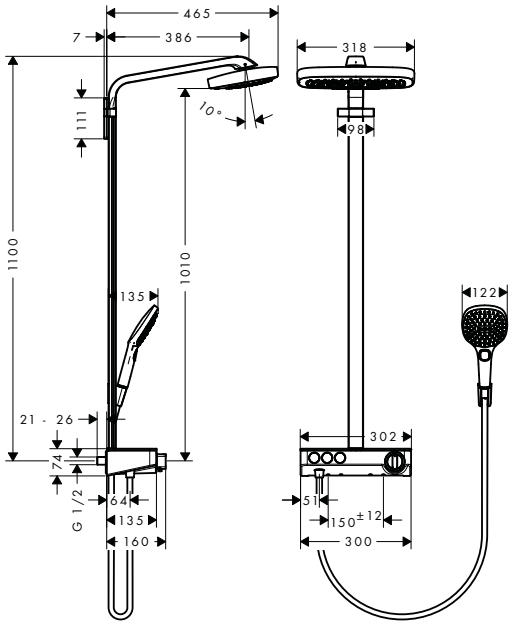

	finish	code no.	Euro
Raindance Select E	Chrome	27127000	1,920.00
Showerpipe 300 3jet	White/Chrome	27127400	1,920.00
with ShowerTablet Select 300			

Cool Contact · Select · Air Power · Quick Clean · XXL Performance

- consists of: overhead shower, hand shower, shower thermostat, shower hose, shower holder
- overhead shower Raindance Select E 300 3jet
- shower head size: 300 x 190 mm
- spray type: RainAir, Rain, RainStream
- convenient diversion via Select button
- spray disc surface in two variants: chrome or white
- shelf made of safety glass
- surface of the shelf at color variant -000 = mirror glass, at color variant -400 = white glass
- shower arm length: 380 mm
- maximum flow rate at 3 bar: 19 l/ min
- flow rate RainAir spray (at 3 bar): 16 l/ min
- flow rate Rain spray (at 3 bar): 16 l/ min
- flow rate RainStream spray (at 3 bar): 19 l/ min
- operating pressure: min. 2 bar/ max. 10 bar
- CoolContact thermostat: Prevents the housing from heating up, making showering even safer
- thermostat ShowerTablet Select 300
- isolated water conduction
- safety lock at 40° C
- adjustable hot water limitation
- convenient diversion via Select button
- installation type: exposed installation
- connection dimension DN15
- connection thread G ½
- centre distance 150 ± 12 mm
- in case of installation on existing G ¾ connections, adaptor # 02026000 must be used

Consisting of:

- Shower holder Porter S (# 28331XXX)
- **Raindance Select E** Hand shower 120 3jet (# 26520XXX)
- **Isiflex** Shower hose 160 cm (# 28276XXX)

Optional parts:

· S-connections adapter G ¾ for renovation	Chrome	02026000	30.10

Measurements within scale drawings are in mm.

Technical specifications and units of measure are subject to change.



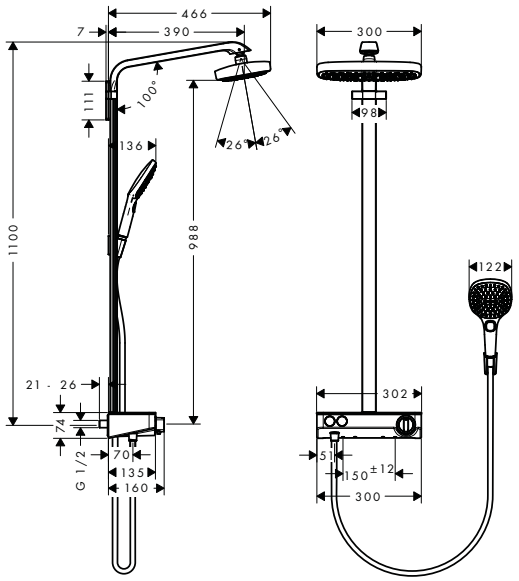

Raindance Select E

Showerpipe 300 2jet
with ShowerTablet Select 300

- consists of: overhead shower, hand shower, shower thermostat, shower hose, shower holder
- overhead shower Raindance Select E 300 2jet
- shower head size: 300 x 160 mm
- spray type: RainAir, Rain
- convenient diversion via Select button
- spray disc surface in two variants: chrome or white
- ball-joint: overhead shower angle adjustable
- shelf made of safety glass
- surface of the shelf at color variant -000 = mirror glass, at color variant -400 = white glass
- hand shower wall support
- shower arm length: 380 mm
- maximum flow rate at 3 bar: 16 l/ min
- flow rate RainAir spray (at 3 bar): 16 l/ min
- flow rate Rain spray (at 3 bar): 16 l/ min
- operating pressure: min. 1,5 bar/ max. 10 bar
- CoolContact thermostat: Prevents the housing from heating up, making showering even safer
- thermostat ShowerTablet Select 300
- isolated water conduction
- safety lock at 40° C
- adjustable hot water limitation
- convenient diversion via Select button
- installation type: exposed installation
- connection dimension DN15
- connection thread G ½
- centre distance 150 ± 12 mm
- in case of installation on existing G ¾ connections, adaptor # 02026000 must be used

Consisting of:

- Shower holder Porter S (# 28331XXX)
- **Isiflex** Shower hose 160 cm (# 28276XXX)
- **Raindance Select E** Hand shower 120 3jet (# 26520XXX)

Water saving EcoSmart version:

- **Raindance Select E** Showerpipe 300 2jet EcoSmart 9 l/ min with ShowerTablet Select 300

Optional parts:

- S-connections adapter G ¾ for renovation

finish	code no.	Euro
Chrome	27126000	1,620.20
White/Chrome	27126400	1,620.20
Chrome	27283000	1,620.20
White/Chrome	27283400	1,620.20
Chrome	02026000	30.10

Cool Contact · Select · Air Power · Quick Clean · XXL Performance

Measurements within scale drawings are in mm.

Technical specifications and units of measure are subject to change.

Raindance E Showerpipes



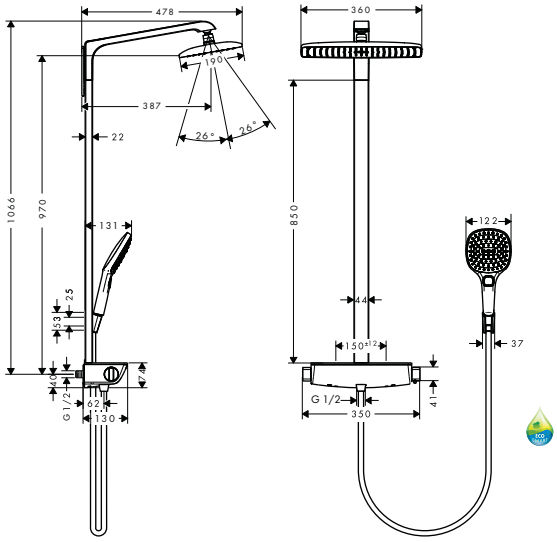

Raindance E Showerpipe 360 1jet with thermostat

- consists of: overhead shower, hand shower, shower thermostat, shower hose, shower holder
- overhead shower Raindance E 360 Air
- shower head size: 360 x 190 mm
- spray type: RainAir
- ball-joint: overhead shower angle adjustable
- shelf made of safety glass
- shelf finish: chrome or white
- surface of the shelf at color variant -000 = mirror glass, at color variant -400 = white glass
- shower arm length: 380 mm
- maximum flow rate at 3 bar: 15 l/min
- operating pressure: min. 1,5 bar/ max. 10 bar
- CoolContact thermostat: Prevents the housing from heating up, making showering even safer
- thermostat Ecostat Select
- isolated water conduction
- safety lock at 40° C
- adjustable hot water limitation
- outlets controlled via turning handle
- will not run two outlets at same time
- installation type: exposed installation
- connection dimension DN15
- connection thread G ½
- centre distance 150 ± 12 mm
- in case of installation on existing G ¾ connections, adaptor # 02026000 must be used

Consisting of:

- Shower holder Porter S (# 28331XXX)
- **Isiflex** Shower hose 160 cm (# 28276XXX)
- **Raindance Select E** Hand shower 120 3jet (# 26520XXX)

Water saving EcoSmart version:

- **Raindance E** Showerpipe 360 1jet EcoSmart 9 l/min with thermostat

Optional parts:

- S-connections adapter G ¾ for renovation
- Wall bar spacer for Raindance Select

finish	code no.	Euro
Chrome	27112000	1,364.40
White/Chrome	27112400	1,364.40
Chrome	27286000	1,364.40
White/Chrome	27286400	1,364.40
Chrome	02026000	30.10
Chrome	95960000	26.40

Cool Contact · Select · Air Power · Quick Clean · XXL Performance

Measurements within scale drawings are in mm.

Technical specifications and units of measure are subject to change.



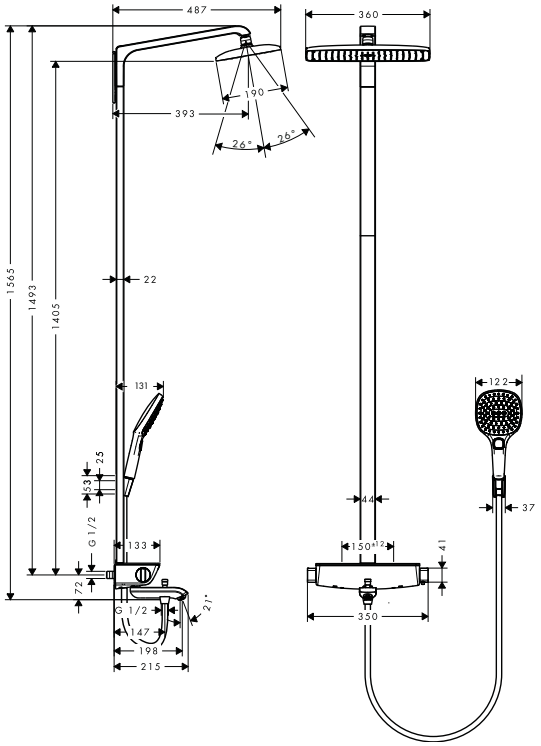

	finish	code no.	Euro
Raindance E Showerpipe 360 1jet with bath thermostat	Chrome	27113000	1,486.80
	White/Chrome	27113400	1,486.80

Cool Contact · Select · Air Power · Quick Clean · XXL Performance

- consists of: overhead shower, hand shower, bath thermostat, shower hose, shower holder
- overhead shower Raindance E 360 Air
- shower head size: 360 x 190 mm
- spray type: RainAir
- ball-joint: overhead shower angle adjustable
- shelf made of safety glass
- surface of the shelf at color variant -000 = mirror glass, at color variant -400 = white glass
- shower arm length: 380 mm
- maximum flow rate at 3 bar: 20 l/ min
- flow rate RainAir spray (at 3 bar): 17 l/ min
- operating pressure: min. 1,3 bar/ max. 10 bar
- CoolContact thermostat: Prevents the housing from heating up, making showering even safer
- thermostat Ecostat Select
- flow rate bath filler: 20 l/ min
- isolated water conduction
- safety lock at 40° C
- adjustable hot water limitation
- outlets controlled via turning handle
- installation type: exposed installation
- connection dimension DN15
- connection thread G ½
- centre distance 150 ± 12 mm
- intrinsically safe against backflow
- in case of installation on existing G ¾ connections, adaptor # 02026000 must be used

Consisting of:

- **Raindance Select E** Hand shower 120 3jet (# 26520XXX)
- **Isiflex** Shower hose 160 cm (# 28276XXX)
- Shower holder Porter S (# 28331XXX)

Optional parts:

· S-connections adapter G ¾ for renovation	Chrome	02026000	30.10
· Wall bar spacer for Raindance Select	Chrome	95960000	26.40

Measurements within scale drawings are in mm.

Technical specifications and units of measure are subject to change.

	finish	code no.	Euro
Raindance E Showerpipe 360 1jet with ShowerTablet Select 300	Chrome	27288000	1,620.20
	White/Chrome	27288400	1,620.20



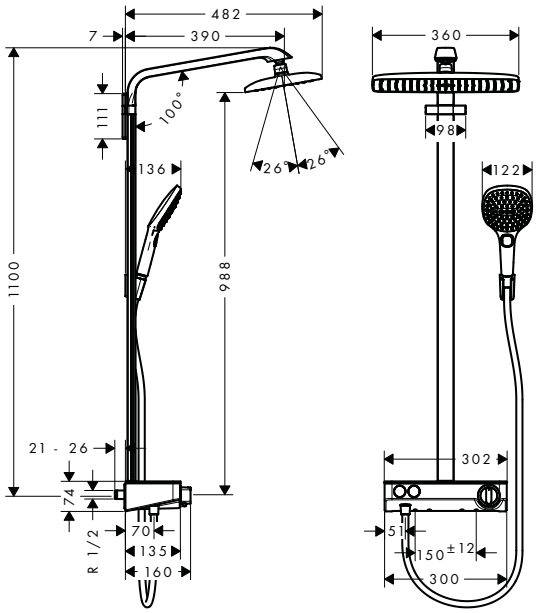

- consists of: overhead shower, hand shower, shower thermostat, shower hose, shower holder
- overhead shower Raindance E 360 Air
- shower head size: 360 x 190 mm
- spray type: RainAir
- ball-joint: overhead shower angle adjustable
- shelf made of safety glass
- surface of the shelf at color variant -000 = mirror glass, at color variant -400 = white glass
- shower arm length: 380 mm
- maximum flow rate at 3 bar: 11 l/min
- operating pressure: min. 2 bar/max. 10 bar
- CoolContact thermostat: Prevents the housing from heating up, making showering even safer
- thermostat ShowerTablet Select 300
- isolated water conduction
- safety lock at 40° C
- adjustable hot water limitation
- convenient diversion via Select button
- installation type: exposed installation
- connection dimension DN15
- connection thread G ½
- centre distance 150 ± 12 mm
- in case of installation on existing G ¾ connections, adaptor # 02026000 must be used

Consisting of:

- Shower holder Porter S (# 28331XXX)
- **Isiflex** Shower hose 160 cm (# 28276XXX)
- **Raindance Select E** Hand shower 120 3jet (# 26520XXX)

Optional parts:

· S-connections adapter G ¾ for renovation	Chrome	02026000	30.10



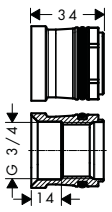

S-connections adapter G ¾ for renovation

Chrome	02026000	30.10

- installation type: exposed installation
- connection dimension G ¾
- adapter for installation on existing s-unions G ½ x G ¾

Measurements within scale drawings are in mm.

Technical specifications and units of measure are subject to change.



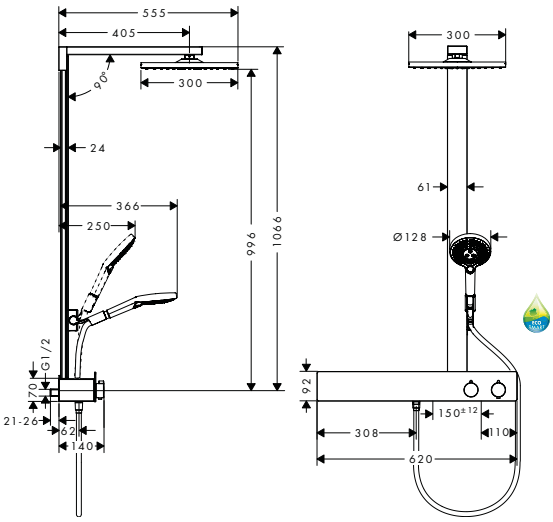

	finish	code no.	Euro
Raindance E Showerpipe 300 1jet with ShowerTablet 600	Chrome	27363000	1,558.40

Cool Contact · Select · Air Power · Quick Clean · XXL Performance

- consists of: overhead shower, hand shower, shower thermostat, shower hose, slider
- overhead shower Raindance E 300 Air 1jet
- shower head size: 300 x 300 mm
- spray type: RainAir
- ball-joint: overhead shower angle adjustable
- 90° position adjustable slider, pivots left and right, up and down
- shelf finish: aluminium anodized
- surface of the cover at color variant -000 = mirror glass, at color variant -400 = white glass
- shower arm length: 405 mm
- maximum flow rate at 3 bar: 16 l/min
- operating pressure: min. 1,5 bar/max. 10 bar
- CoolContact thermostat: Prevents the housing from heating up, making showering even safer
- thermostat ShowerTablet 600
- isolated water conduction
- safety lock at 40° C
- outlets controlled via turning handle
- will not run two outlets at same time
- installation type: exposed installation
- connection dimension DN15
- connection thread G ½
- centre distance 150 ± 12 mm

Consisting of:

- **Isiflex** Shower hose 160 cm (# 28276XXX)
- **Raindance Select S** Hand shower 120 3jet (# 26530XXX)

Water saving EcoSmart version:			
· **Raindance E** Showerpipe 300 1jet EcoSmart 9 l/min with ShowerTablet 600	Chrome	27364000	1,558.40
Optional parts:			
· **Casetta** Soap dish/ shelf E	Chrome	26511000	64.00
	White/Chrome	26511400	64.00
	Black/Chrome	26511600	64.00

Measurements within scale drawings are in mm.

Technical specifications and units of measure are subject to change.



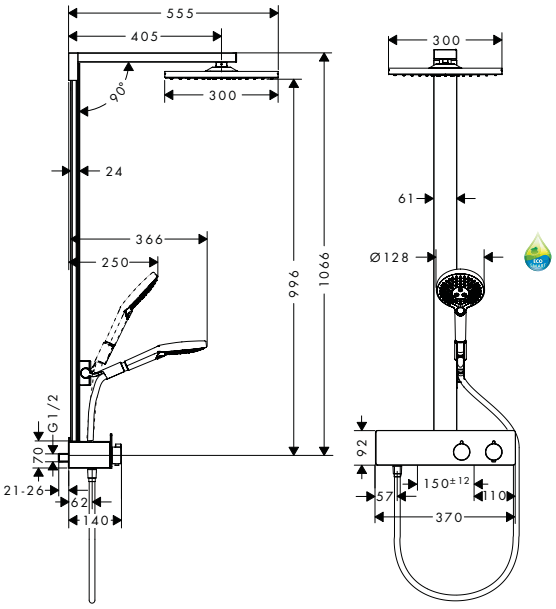

Raindance E Showerpipe 300 1jet with ShowerTablet 350

- consists of: overhead shower, hand shower, shower thermostat, shower hose, slider
- overhead shower Raindance E 300 Air 1jet
- shower head size: 300 x 300 mm
- spray type: RainAir
- ball-joint: overhead shower angle adjustable
- 90° position adjustable slider, pivots left and right, up and down
- shelf finish: aluminium anodized
- shower arm length: 405 mm
- maximum flow rate at 3 bar: 16 l/ min
- operating pressure: min. 1,5 bar/ max. 10 bar
- CoolContact thermostat: Prevents the housing from heating up, making showering even safer
- thermostat ShowerTablet 350
- isolated water conduction
- safety lock at 40° C
- outlets controlled via turning handle
- will not run two outlets at same time
- installation type: exposed installation
- connection dimension DN15
- connection thread G ½
- centre distance 150 ± 12 mm

Consisting of:

- **Isiflex** Shower hose 160 cm (# 28276XXX)
- **Raindance Select S** Hand shower 120 3jet (# 26530XXX)

Water saving EcoSmart version:

- **Raindance E** Showerpipe 300 1jet EcoSmart 9 l/ min with ShowerTablet 350

Optional parts:

- **Casetta** Soap dish/ shelf E

finish	code no.	Euro
Chrome	27361000	1,334.30
Chrome	27362000	1,334.30
Chrome	26511000	64.00
White/Chrome	26511400	64.00
Black/Chrome	26511600	64.00

Measurements within scale drawings are in mm.

Technical specifications and units of measure are subject to change.

Raindance Select S Showerpipes



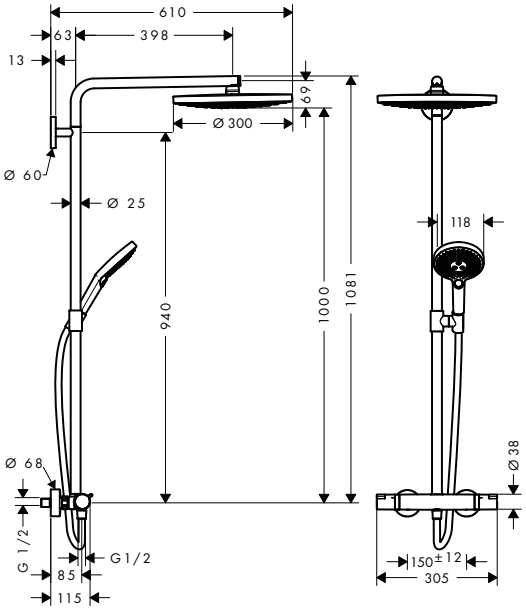

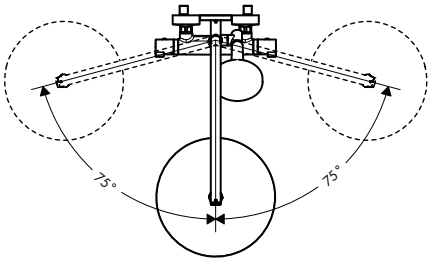

	finish	code no.	Euro
Raindance Select S Showerpipe 300 2jet with thermostat	Chrome White/Chrome	27133000 27133400	1,196.20 1,196.20

Select · Air Power · Quick Clean · XXL Performance

- consists of: overhead shower, hand shower, shower thermostat, shower hose, slider
- overhead shower Raindance Select S 300 2jet
- shower head size: 300 mm
- spray type: RainAir, Rain
- convenient diversion via Select button
- spray disc surface in two variants: chrome or white
- height-adjustable hand shower holder
- rising pipe can be shortened in height
- shower arm length: 460 mm
- swivel shower arm
- maximum flow rate at 3 bar: 15 l/min
- operating pressure: min. 1,5 bar/max. 10 bar
- thermostat Ecostat Comfort
- safety lock at 40° C
- adjustable hot water limitation
- outlets controlled via turning handle
- suitable for continuous flow water heaters
- installation type: exposed installation
- connection dimension DN15
- connection thread G ½
- centre distance 150 ± 12 mm

Consisting of:

- **Isiflex** Shower hose 160 cm (# 28276XXX)
- **Raindance Select S** Hand shower 120 3jet (# 26530XXX)

Optional parts:

· Wall bar spacer for Croma 100 Showerpipe	Chrome	95239000	10.20

Measurements within scale drawings are in mm.

Technical specifications and units of measure are subject to change.



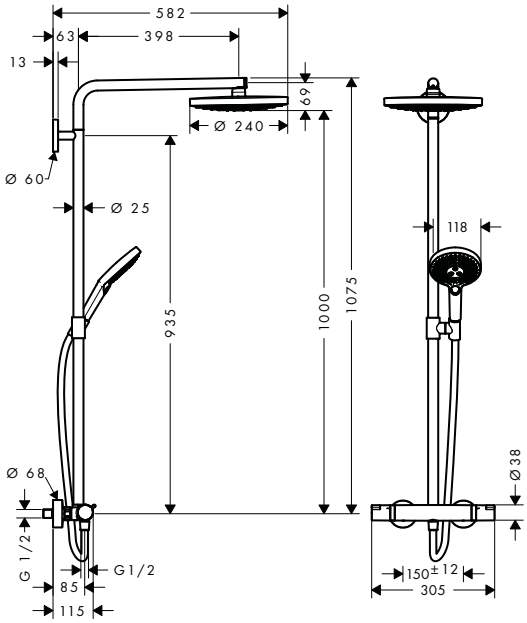

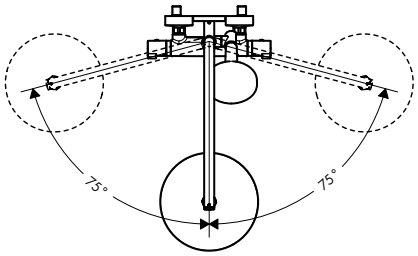

Raindance Select S

Showerpipe 240 2jet
with thermostat

- consists of: overhead shower, hand shower, shower thermostat, shower hose, slider
- overhead shower Raindance Select S 240 2jet
- shower head size: 240 mm
- spray type: RainAir, Rain
- convenient diversion via Select button
- spray disc surface in two variants: chrome or white
- height-adjustable hand shower holder
- rising pipe can be shortened in height
- shower arm length: 398 mm
- swivel shower arm
- maximum flow rate at 3 bar: 15 l/min
- operating pressure: min. 1,5 bar/max. 10 bar
- thermostat Ecostat Comfort
- safety lock at 40° C
- adjustable hot water limitation
- outlets controlled via turning handle
- suitable for continuous flow water heaters
- installation type: exposed installation
- connection dimension DN15
- connection thread G ½
- centre distance 150 ± 12 mm

Consisting of:

- **Isiflex** Shower hose 160 cm (# 28276XXX)
- **Raindance Select S** Hand shower 120 3jet (# 26530XXX)

Optional parts:

- Wall bar spacer for Croma 100 Showerpipe

finish	code no.	Euro
Chrome	27129000	1,007.30
White/Chrome	27129400	1,007.30
Chrome	95239000	10.20

Select · Air Power · Quick Clean · XXL Performance

Measurements within scale drawings are in mm.

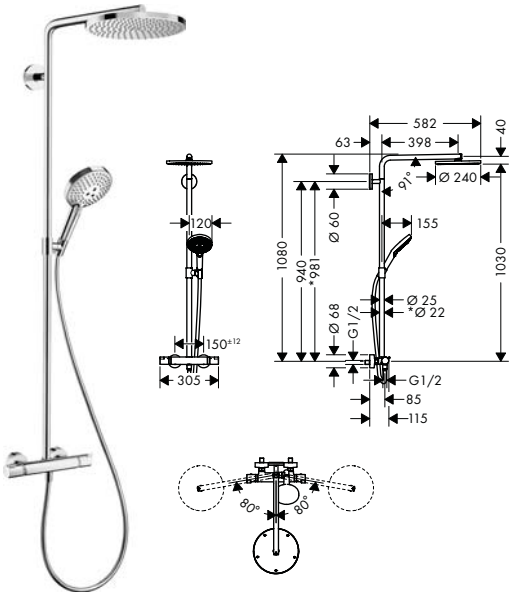

Raindance Select S
Showerpipe 240 1jet PowderRain with thermostat

- consists of: overhead shower, hand shower, shower thermostat, shower hose, slider
- overhead shower Raindance S240 P
- shower head size: 240 mm
- spray type: PowderRain
- height-adjustable hand shower holder
- rising pipe can be shortened in height
- shower arm length: 460 mm
- swivel shower arm
- maximum flow rate at 3 bar: 16 l/min
- flow rate PowderRain spray (at 0.3 bar): 16 l/min
- operating pressure: min. 1,5 bar/max. 10 bar
- thermostat Ecostat Comfort
- safety lock at 40° C
- adjustable hot water limitation
- outlets controlled via turning handle
- installation type: exposed installation
- connection dimension DN15
- connection thread G ½
- centre distance 150 ± 12 mm

Consisting of:
- **Raindance S** Overhead shower 240 1jet PowderRain (# 27623000)
- **Raindance Select S** Hand shower 120 3jet PowderRain (# 26014000)
- **Isiflex** Shower hose 160 cm (# 28276XXX)

Optional parts:
- Wall bar spacer for Croma 100 Showerpipe

finish	code no.	Euro
Chrome	27633000	923.30
Brushed Bronze	27633140	1,385.00
Brushed Black Chrome	27633340	1,385.00
Matt Black	27633670	1,292.60
Matt White	27633700	1,292.60
Polished Gold Optic	27633990	1,385.00
Chrome	95239000	10.20

Select · Quick Clean · XXL Performance

Raindance S Showerpipes

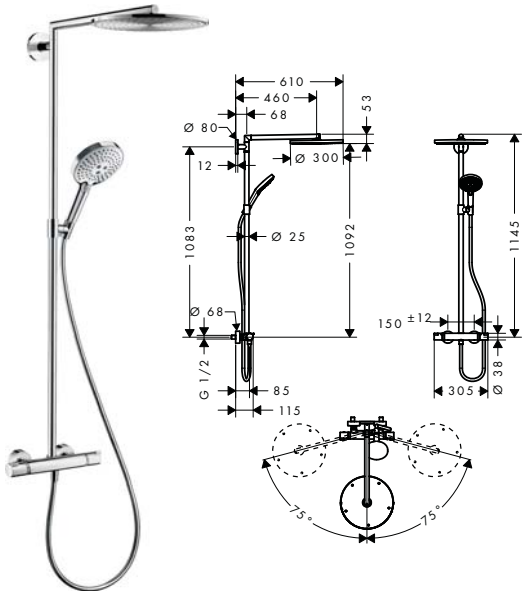

Raindance S Showerpipe 300 1jet with thermostat

- consists of: overhead shower, hand shower, shower thermostat, shower hose, slider
- overhead shower Raindance S 300 Air
- shower head size: 300 mm
- spray type: RainAir
- height-adjustable hand shower holder
- rising pipe can be shortened in height
- shower arm length: 460 mm
- swivel shower arm
- maximum flow rate at 3 bar: 16 l/min
- operating pressure: min. 2 bar/max. 10 bar
- thermostat Ecostat Comfort
- safety lock at 40° C
- adjustable hot water limitation
- outlets controlled via turning handle
- suitable for continuous flow water heaters
- installation type: exposed installation
- connection dimension DN15
- connection thread G ½
- centre distance 150 ± 12 mm

Consisting of:
- **Isiflex** Shower hose 160 cm (# 28276XXX)
- **Raindance Select S** Hand shower 120 3jet (# 26530XXX)

Optional parts:
- Wall bar spacer

finish	code no.	Euro
Chrome	27114000	1,043.20
Chrome	98681000	13.40

Select · Air Power · Quick Clean · XXL Performance

Measurements within scale drawings are in mm.

Technical specifications and units of measure are subject to change.



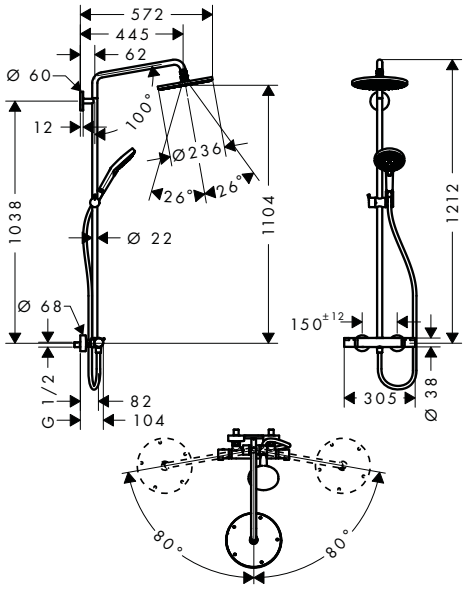

	finish	code no.	Euro
Raindance S Showerpipe 240 1jet with thermostat	Chrome	27115000	834.70

Select · Air Power · Quick Clean · XXL Performance

- consists of: overhead shower, hand shower, shower thermostat, shower hose, slider
- overhead shower Raindance S 240 Air
- shower head size: 236 mm
- spray type: RainAir
- ball-joint: overhead shower angle adjustable
- height-adjustable hand shower holder
- rising pipe can be shortened in height
- shower arm length: 460 mm
- swivel shower arm
- maximum flow rate at 3 bar: 16 l/min
- flow rate RainAir spray (at 3 bar): 16 l/min
- operating pressure: min. 1,5 bar/max. 10 bar
- thermostat Ecostat Comfort
- safety lock at 40° C
- adjustable hot water limitation
- outlets controlled via turning handle
- will not run two outlets at same time
- installation type: exposed installation
- connection dimension DN15
- connection thread G ½
- centre distance 150 ± 12 mm

Consisting of:

- **Isiflex** Shower hose 160 cm (# 28276XXX)
- **Raindance Select S** Hand shower 120 3jet (# 26530XXX)

Water saving EcoSmart version:

· **Raindance S** Showerpipe 240 1jet EcoSmart 9 l/min with thermostat	Chrome	27116000	834.70

Optional parts:

· Wall bar spacer for Croma 100 Showerpipe	Chrome	95239000	10.20

Measurements within scale drawings are in mm.

Technical specifications and units of measure are subject to change.

	finish	code no.	Euro
Raindance S Showerpipe 240 1jet with bath thermostat	Chrome	27117000	1,056.10



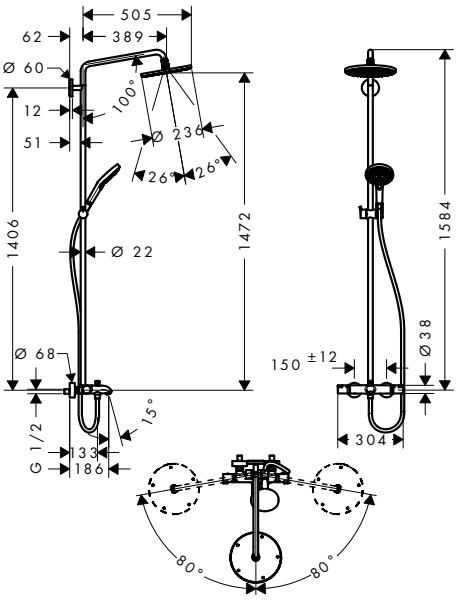

- consists of: overhead shower, hand shower, bath thermostat, shower hose, slider
- overhead shower Raindance S 240 Air
- shower head size: 240 mm
- spray type: RainAir
- ball-joint: overhead shower angle adjustable
- height-adjustable hand shower holder
- rising pipe can be shortened in height
- shower arm length: 460 mm
- swivel shower arm
- flow rate RainAir spray (at 3 bar): 17 l/ min
- operating pressure: min. 1,5 bar/ max. 10 bar
- thermostat Ecostat Comfort
- flow rate bath filler: 20 l/ min
- safety lock at 40° C
- adjustable hot water limitation
- outlets controlled via turning handle
- installation type: exposed installation
- connection dimension DN15
- connection thread G ½
- centre distance 150 ± 12 mm

Consisting of:

- **Isiflex** Shower hose 200 cm (# 28274000)
- **Raindance Select S** Hand shower 120 3jet (# 26530XXX)

Optional parts:

· Wall bar spacer for Croma 100 Showerpipe	Chrome	95239000	10.20

Measurements within scale drawings are in mm.

Technical specifications and units of measure are subject to change.

Croma Select E Showerpipes



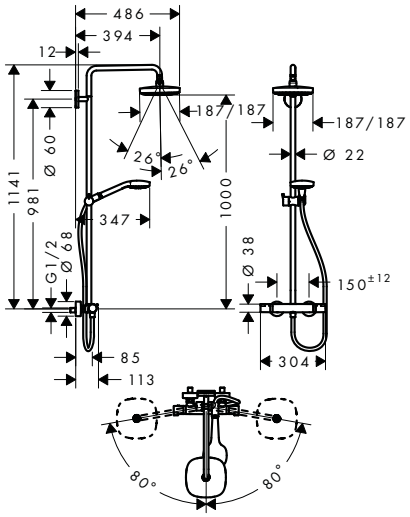

	finish	code no.	Euro
Croma Select E Showerpipe 180 2jet with thermostat	White/Chrome	27256400	672.00

Select · Quick Clean · XXL Performance

- consists of: overhead shower, hand shower, shower thermostat, shower hose, slider
- overhead shower Croma Select E 180 2jet
- shower head size: 180 x 180 mm
- spray type: Rain, IntenseRain
- convenient diversion via Select button
- ball-joint: overhead shower angle adjustable
- height-adjustable hand shower holder
- rising pipe can be shortened in height
- shower arm length: 400 mm
- swivel shower arm
- flow rate IntenseRain spray (at 3 bar): 16 l/min
- flow rate Rain spray (at 3 bar): 16 l/min
- operating pressure: min. 1,1 bar/max. 10 bar
- thermostat Ecostat Comfort
- safety lock at 40° C
- adjustable hot water limitation
- outlets controlled via turning handle
- installation type: exposed installation
- connection dimension DN15
- connection thread G ½
- centre distance 150 ± 12 mm

Consisting of:

- **Croma Select E** Overhead shower 180 2jet (# 26524XXX)
- **Croma Select E** Hand shower Multi (# 26810400)
- **Isiflex** Shower hose 160 cm (# 28276XXX)

Water saving EcoSmart version:

· **Croma Select E** Showerpipe 180 2jet EcoSmart 9 l/min with thermostat	White/Chrome	27257400	672.00

Optional parts:

· Wall bar spacer for Croma 100 Showerpipe	Chrome	95239000	10.20

Measurements within scale drawings are in mm.

Technical specifications and units of measure are subject to change.

	finish	code no.	Euro
Croma Select E Showerpipe 180 2jet with bath thermostat	White/Chrome	27352400	848.80



- consists of: overhead shower, hand shower, bath thermostat, shower hose, slider
- overhead shower Croma Select E 180 2jet
- shower head size: 180 x 180 mm
- spray type: Rain, IntenseRain
- ball-joint: overhead shower angle adjustable
- height-adjustable hand shower holder
- rising pipe can be shortened in height
- swivel shower arm
- maximum flow rate at 3 bar: 18 l/min
- flow rate IntenseRain spray (at 3 bar): 17 l/min
- flow rate Rain spray (at 3 bar): 17 l/min
- operating pressure: min. 1 bar/max. 10 bar
- thermostat Ecostat Comfort
- flow rate bath filler: 20 l/min
- safety lock at 40° C
- adjustable hot water limitation
- outlets controlled via turning handle
- suitable for continuous flow water heaters
- installation type: exposed installation
- connection dimension DN15
- connection thread G ½
- centre distance 150 ± 12 mm

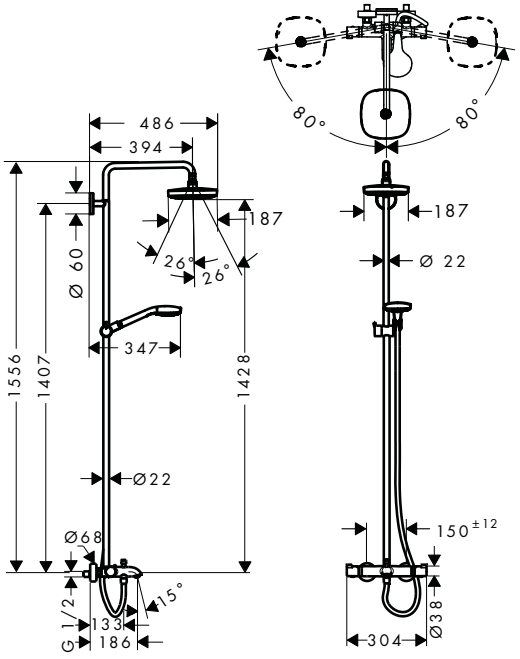

Consisting of:

- **Croma Select E** Hand shower Multi (# 26810400)
- **Croma Select E** Overhead shower 180 2jet (# 26524XXX)
- **Isiflex** Shower hose 200 cm (# 28274000)

Optional parts:

· Wall bar spacer for Croma 100 Showerpipe	Chrome	95239000	10.20

Measurements within scale drawings are in mm.

Technical specifications and units of measure are subject to change.

	finish	code no.	Euro

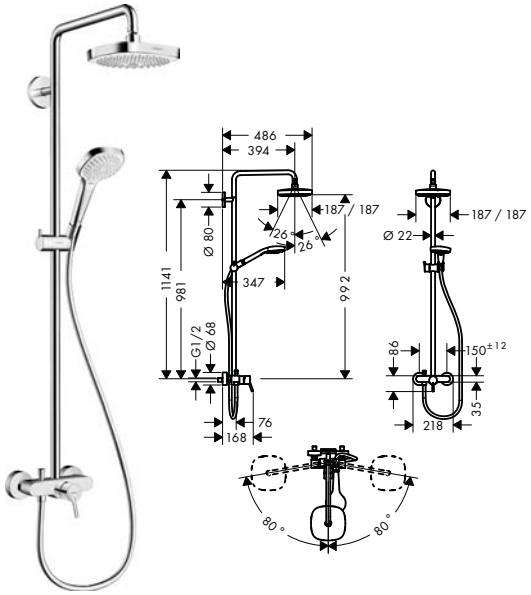

Croma Select E Showerpipe 180 2jet with single lever mixer

White/Chrome 27258400 636.60

- consists of: overhead shower, hand shower, single lever shower mixer, shower hose, slider
- overhead shower Croma Select E 180 2jet
- shower head size: 180 x 180 mm
- ball-joint: overhead shower angle adjustable
- spray type: Rain, IntenseRain
- height-adjustable hand shower holder
- shower arm length: 400 mm
- swivelling shower arm
- flow rate IntenseRain spray (at 3 bar): 16 l/min
- flow rate Rain spray (at 3 bar): 16 l/min
- operating pressure: min. 1,5 bar/max. 10 bar
- installation type: exposed installation
- connection dimension DN15
- connection thread G ½
- centre distance 150 ± 12 mm
- ceramic cartridge
- temperature limitation adjustable
- rising pipe can be shortened in height

Consisting of:
- **Isiflex** Shower hose 160 cm (# 28276XXX)
- **Croma Select E** Overhead shower 180 2jet (# 26524XXX)
- **Croma Select E** Hand shower Multi (# 26810400)

Optional parts:
- Wall bar spacer for Croma 100 Showerpipe — Chrome — 95239000 — 10.20

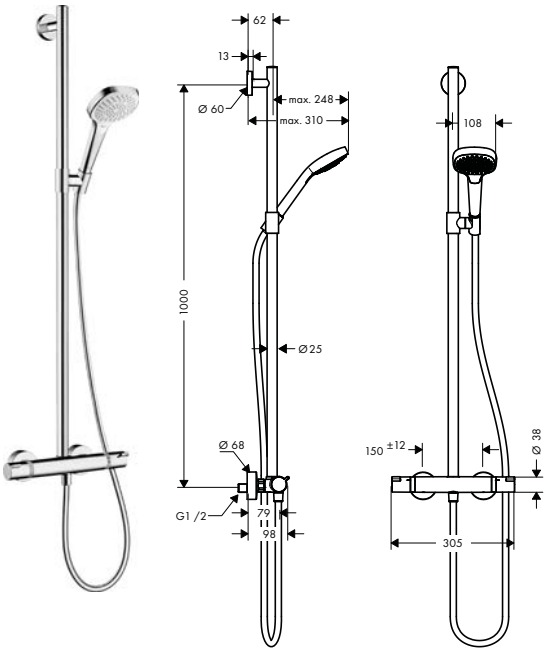

Croma Select E SemiPipe Multi with thermostat

White/Chrome 27248400 330.00

- consists of: hand shower, shower thermostat, shower hose, slider
- spray type hand shower: Massage spray, IntenseRain, SoftRain
- wallbar could be also used as grab bar
- height-adjustable hand shower holder
- wall bar: 1,000 mm
- maximum flow rate at 3 bar: 16 l/min
- operating pressure: min. 1 bar/max. 10 bar
- thermostat Ecostat Comfort
- safety lock at 40° C
- adjustable hot water limitation
- outlets controlled via turning handle
- installation type: exposed installation
- connection dimension DN15
- connection thread G ½
- centre distance 150 ± 12 mm
- TÜV certified

Consisting of:
- **Isiflex** Shower hose 160 cm (# 28276XXX)
- **Croma Select E** Hand shower Multi (# 26810400)

Optional parts:
- Wall bar spacer for Croma 100 Showerpipe — Chrome — 95239000 — 10.20

Measurements within scale drawings are in mm.

Technical specifications and units of measure are subject to change.

Croma Select S Showerpipes



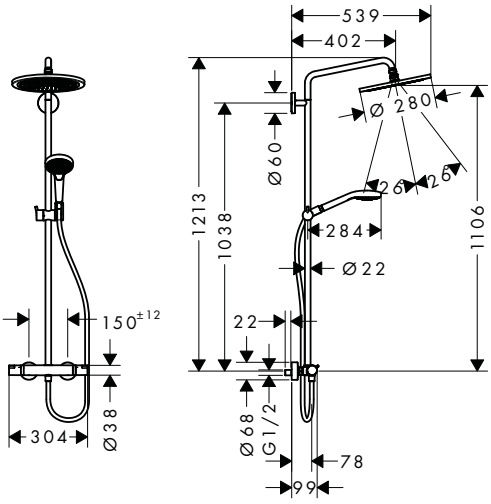

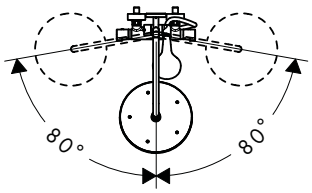

	finish	code no.	Euro
Croma Select S Showerpipe 280 1jet with thermostat	Chrome	26790000	750.40

Air Power · Quick Clean · XXL Performance

- consists of: overhead shower, hand shower, shower thermostat, shower hose, slider
- overhead shower Croma 280
- shower head size: 280 mm
- spray type: RainAir
- ball-joint: overhead shower angle adjustable
- height-adjustable hand shower holder
- rising pipe can be shortened in height
- shower arm length: 400 mm
- swivel shower arm
- maximum flow rate at 3 bar: 16 l/min
- flow rate RainAir spray (at 3 bar): 16 l/min
- operating pressure: min. 1 bar/max. 10 bar
- thermostat Ecostat Comfort
- safety lock at 40° C
- adjustable hot water limitation
- outlets controlled via turning handle
- suitable for continuous flow water heaters
- installation type: exposed installation
- connection dimension DN15
- connection thread G ½
- centre distance 150 ± 12 mm

Consisting of:

- **Croma** Overhead shower 280 1jet (# 26220XXX)
- **Croma Select S** Hand shower Multi (# 26800400)
- **Isiflex** Shower hose 160 cm (# 28276XXX)

Water saving EcoSmart version:

Croma Select S Showerpipe 280 1jet EcoSmart 9 l/min with thermostat	Chrome	26794000	752.40

Optional parts:

Wall bar spacer for Croma 100 Showerpipe	Chrome	95239000	10.20

Measurements within scale drawings are in mm.

Technical specifications and units of measure are subject to change.



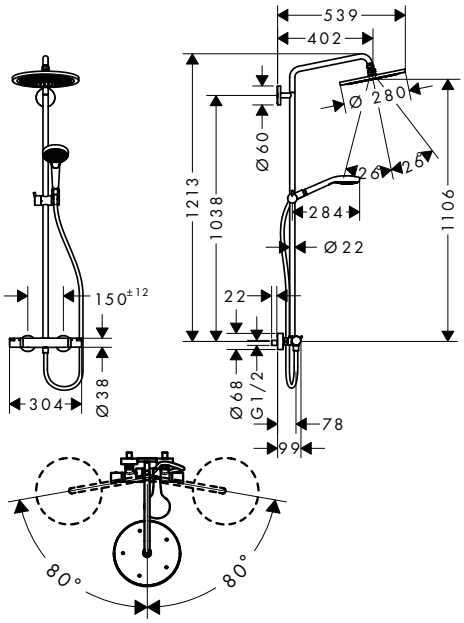

Croma Select S Showerpipe 280 1jet with thermostat and hand shower Raindance Select S 120 3jet

- consists of: overhead shower, hand shower, shower thermostat, shower hose, slider
- overhead shower Croma 280
- shower head size: 280 mm
- spray type: RainAir
- ball-joint: overhead shower angle adjustable
- height-adjustable hand shower holder
- rising pipe can be shortened in height
- shower arm length: 400 mm
- swivel shower arm
- maximum flow rate at 3 bar: 14.5 l/min
- flow rate RainAir spray (at 3 bar): 15 l/min
- flow rate Rain spray (at 3 bar): 11 l/min
- operating pressure: min. 1 bar/max. 10 bar
- thermostat Ecostat Comfort
- safety lock at 40° C
- adjustable hot water limitation
- outlets controlled via turning handle
- suitable for continuous flow water heaters
- installation type: exposed installation
- connection dimension DN15
- connection thread G ½
- centre distance 150 ± 12 mm

Consisting of:

- **Isiflex** Shower hose 160 cm (# 28276XXX)
- **Croma** Overhead shower 280 1jet (# 26220XXX)
- **Raindance Select S** Hand shower 120 3jet (# 26530XXX)

Water saving EcoSmart version:

- **Croma Select S** Showerpipe 280 1jet EcoSmart 9 l/min with thermostat and hand shower Raindance Select S 120 3jet

Optional parts:

- Wall bar spacer

finish	code no.	Euro
Brushed Bronze	26890140	1,177.10
Brushed Black Chrome	26890340	1,177.10
Matt Black	26890670	1,099.10
Matt White	26890700	1,099.10
Polished Gold Optic	26890990	1,177.10
Brushed Bronze	26891140	1,180.20
Brushed Black Chrome	26891340	1,180.20
Matt Black	26891670	1,102.10
Matt White	26891700	1,102.10
Polished Gold Optic	26891990	1,180.20
Chrome	98681000	13.40

Air Power · Quick Clean · XXL Performance

Measurements within scale drawings are in mm.

Technical specifications and units of measure are subject to change.

	finish	code no.	Euro

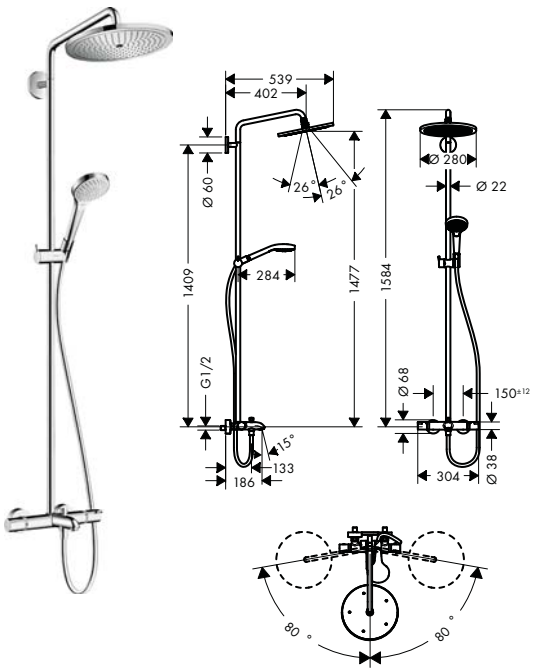

Croma Select S Showerpipe 280 1jet with bath thermostat

Chrome — 26792000 — 913.40

Air Power · Quick Clean · XXL Performance

- consists of: overhead shower, hand shower, bath thermostat, shower hose, slider
- overhead shower Croma 280
- shower head size: 280 mm
- spray type: RainAir
- ball-joint: overhead shower angle adjustable
- height-adjustable hand shower holder
- rising pipe can be shortened in height
- swivel shower arm
- flow rate RainAir spray (at 3 bar): 16 l/ min
- operating pressure: min. 1,4 bar/ max. 10 bar
- thermostat Ecostat Comfort
- flow rate bath filler: 20 l/ min
- safety lock at 40° C
- adjustable hot water limitation
- outlets controlled via turning handle
- installation type: exposed installation
- connection dimension DN15
- connection thread G ½
- centre distance 150 ± 12 mm

Consisting of:
- **Croma** Overhead shower 280 1jet (# 26220XXX)
- **Croma Select S** Hand shower Multi (# 26800400)
- **Isiflex** Shower hose 200 cm (# 28274000)

Optional parts:
- Wall bar spacer for Croma 100 Showerpipe — Chrome — 95239000 — 10.20

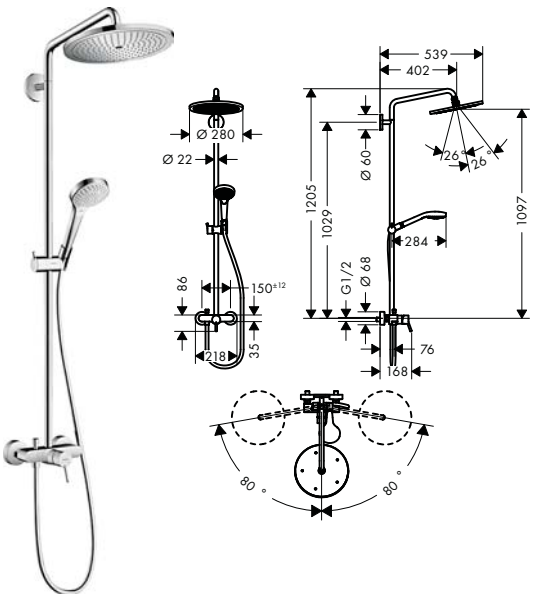

Croma Select S Showerpipe 280 1jet with single lever mixer

Chrome — 26791000 — 717.70

Air Power · Quick Clean · XXL Performance

- consists of: overhead shower, hand shower, single lever shower mixer, shower hose, slider
- overhead shower Croma 280
- shower head size: 280 mm
- ball-joint: overhead shower angle adjustable
- spray type: RainAir
- height-adjustable hand shower holder
- shower arm length: 400 mm
- swivelling shower arm
- maximum flow rate at 3 bar: 15 l/ min
- flow rate RainAir spray (at 3 bar): 15 l/ min
- operating pressure: min. 1 bar/ max. 10 bar
- installation type: exposed installation
- connection dimension DN15
- connection thread G ½
- centre distance 150 ± 12 mm
- ceramic cartridge
- temperature limitation adjustable
- rising pipe can be shortened in height

Consisting of:
- **Croma** Overhead shower 280 1jet (# 26220XXX)
- **Croma Select S** Hand shower Multi (# 26800400)
- **Isiflex** Shower hose 160 cm (# 28276XXX)

Optional parts:
- Wall bar spacer for Croma 100 Showerpipe — Chrome — 95239000 — 10.20

Measurements within scale drawings are in mm.

Technical specifications and units of measure are subject to change.

	finish	code no.	Euro
Croma Select S Showerpipe 280 1jet Reno	Chrome	26793000	674.20



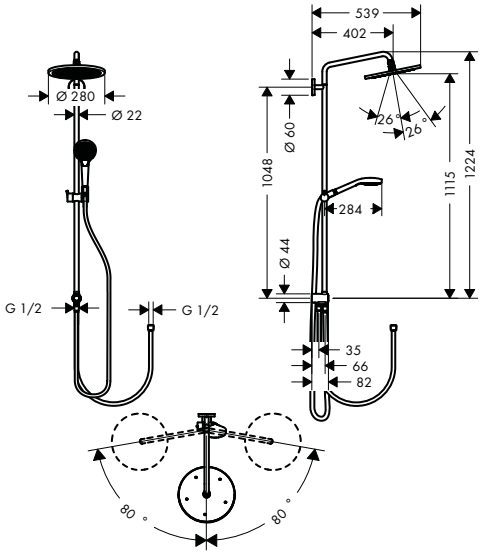

- consists of: overhead shower, hand shower, shower hose, slider
- overhead shower Croma 280
- shower head size: 280 mm
- spray type: RainAir
- ball-joint: overhead shower angle adjustable
- shower arm length: 400 mm
- swivelling shower arm
- height-adjustable hand shower holder
- flow rate RainAir spray (at 3 bar): 10 l/min
- operating pressure: min. 1 bar/max. 6 bar
- installation type: exposed installation
- water connection: Isiflex shower hose 80 cm
- connection dimension: DN15
- connection thread G ½
- rising pipe can be shortened in height

Consisting of:

- **Isiflex** Shower hose 160 cm (# 28276XXX)
- **Isiflex** Shower hose B 80 cm (# 28278000)
- **Croma** Overhead shower 280 1jet (# 26220XXX)
- **Croma Select S** Hand shower Multi (# 26800400)

Optional parts:

· Wall bar spacer for Croma 100 Showerpipe	Chrome	95239000	10.20

	finish	code no.	Euro
Croma Select S Showerpipe 180 2jet with thermostat	White/Chrome	27253400	672.00



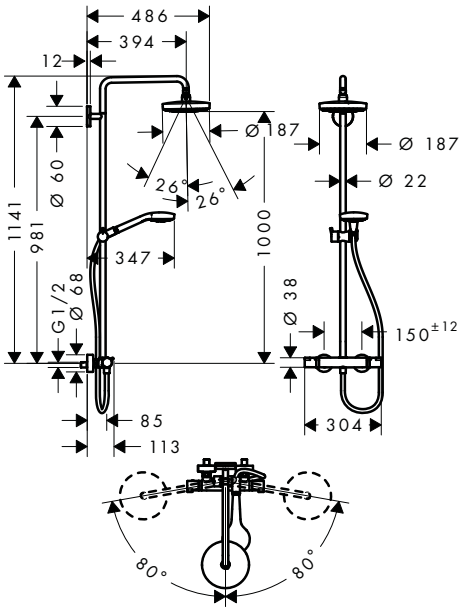

- consists of: overhead shower, hand shower, shower thermostat, shower hose, slider
- overhead shower Croma Select S 180 2jet
- shower head size: 180 mm
- spray type: Rain, IntenseRain
- convenient diversion via Select button
- ball-joint: overhead shower angle adjustable
- height-adjustable hand shower holder
- rising pipe can be shortened in height
- shower arm length: 400 mm
- swivel shower arm
- flow rate IntenseRain spray (at 3 bar): 16 l/ min
- flow rate Rain spray (at 3 bar): 16 l/ min
- operating pressure: min. 1,5 bar/ max. 10 bar
- thermostat Ecostat Comfort
- safety lock at 40° C
- adjustable hot water limitation
- outlets controlled via turning handle
- installation type: exposed installation
- connection dimension DN15
- connection thread G ½
- centre distance 150 ± 12 mm

Consisting of:

- **Isiflex** Shower hose 160 cm (# 28276XXX)
- **Croma Select S** Overhead shower 180 2jet (# 26522XXX)
- **Croma Select S** Hand shower Multi (# 26800400)

Water saving EcoSmart version:

· **Croma Select S** Showerpipe 180 2jet EcoSmart 9 l/ min with thermostat	White/Chrome	27254400	672.00

Optional parts:

· Wall bar spacer for Croma 100 Showerpipe	Chrome	95239000	10.20

Measurements within scale drawings are in mm.

Technical specifications and units of measure are subject to change.

	finish	code no.	Euro
Croma Select S Showerpipe 180 2jet with bath thermostat	White/Chrome	27351400	848.80



- consists of: overhead shower, hand shower, bath thermostat, shower hose, slider
- overhead shower Croma Select S 180 2jet
- shower head size: 180 mm
- spray type: Rain, IntenseRain
- convenient diversion via Select button
- ball-joint: overhead shower angle adjustable
- height-adjustable hand shower holder
- rising pipe can be shortened in height
- swivel shower arm
- flow rate IntenseRain spray (at 3 bar): 17 l/ min
- flow rate Rain spray (at 3 bar): 17 l/ min
- operating pressure: min. 1 bar/ max. 10 bar
- thermostat Ecostat Comfort
- flow rate bath filler: 20 l/ min
- safety lock at 40° C
- adjustable hot water limitation
- outlets controlled via turning handle
- installation type: exposed installation
- connection dimension DN15
- connection thread G ½
- centre distance 150 ± 12 mm

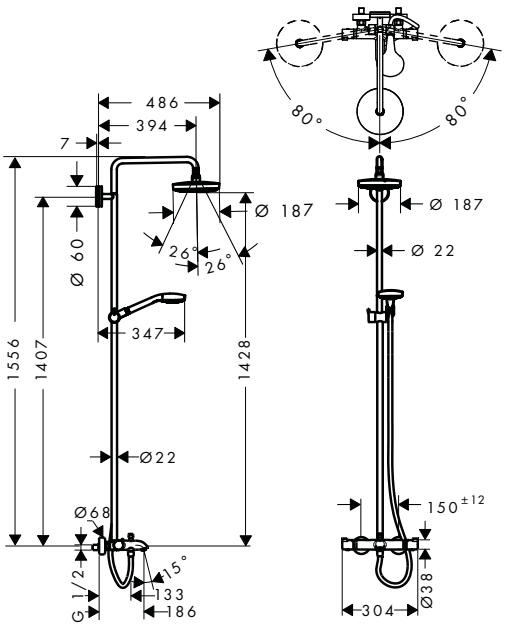

Consisting of:

- **Croma Select S** Overhead shower 180 2jet (# 26522XXX)
- **Croma Select S** Hand shower Multi (# 26800400)
- **Isiflex** Shower hose 200 cm (# 28274000)

Optional parts:

· Wall bar spacer for Croma 100 Showerpipe	Chrome	95239000	10.20

Measurements within scale drawings are in mm.

Technical specifications and units of measure are subject to change.

	finish	code no.	Euro



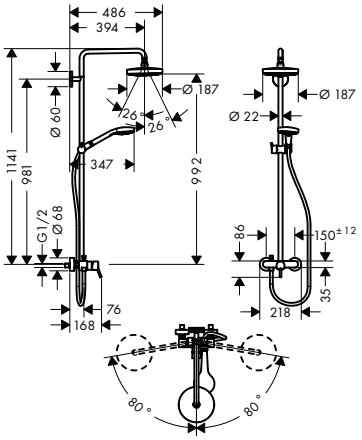

Croma Select S Showerpipe 180 2jet with single lever mixer

White/Chrome — 27255400 — 636.60

- consists of: overhead shower, hand shower, single lever shower mixer, shower hose, slider
- overhead shower Croma Select S 180 2jet
- shower head size: 180 mm
- ball-joint: overhead shower angle adjustable
- spray type: Rain, IntenseRain
- convenient diversion via Select button
- height-adjustable hand shower holder
- shower arm length: 400 mm
- swivelling shower arm
- flow rate IntenseRain spray (at 3 bar): 16 l/min
- flow rate Rain spray (at 3 bar): 16 l/min
- operating pressure: min. 1,5 bar/max. 10 bar
- installation type: exposed installation
- connection dimension DN15
- connection thread G ½
- centre distance 150 ± 12 mm
- ceramic cartridge
- temperature limitation adjustable

Consisting of:
- **Isiflex** Shower hose 160 cm (# 28276XXX)
- **Croma Select S** Overhead shower 180 2jet (# 26522XXX)
- **Croma Select S** Hand shower Multi (# 26800400)

Optional parts:
- Wall bar spacer for Croma 100 Showerpipe — Chrome — 95239000 — 10.20



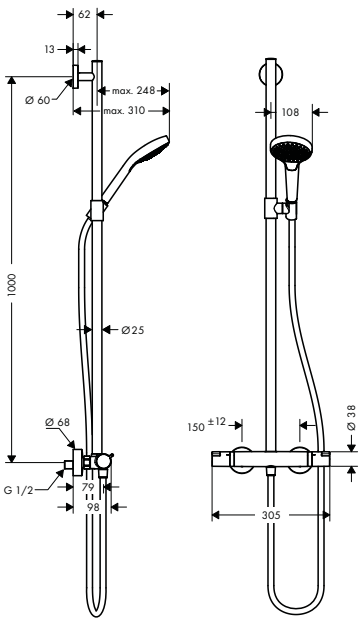

Croma Select S SemiPipe Multi with thermostat

White/Chrome — 27247400 — 330.00

- consists of: hand shower, shower thermostat, shower hose, slider
- spray type hand shower: Massage spray, IntenseRain, SoftRain
- wallbar could be also used as grab bar
- height-adjustable hand shower holder
- wall bar: 900 mm
- maximum flow rate at 3 bar: 16 l/min
- operating pressure: min. 1 bar/max. 10 bar
- thermostat Ecostat Comfort
- safety lock at 40° C
- adjustable hot water limitation
- outlets controlled via turning handle
- installation type: exposed installation
- connection dimension DN15
- connection thread G ½
- centre distance 150 ± 12 mm
- TÜV certified

Consisting of:
- **Isiflex** Shower hose 160 cm (# 28276XXX)
- **Croma Select S** Hand shower Multi (# 26800400)

Optional parts:
- Wall bar spacer for Croma 100 Showerpipe — Chrome — 95239000 — 10.20

Measurements within scale drawings are in mm.

Technical specifications and units of measure are subject to change.

Croma E





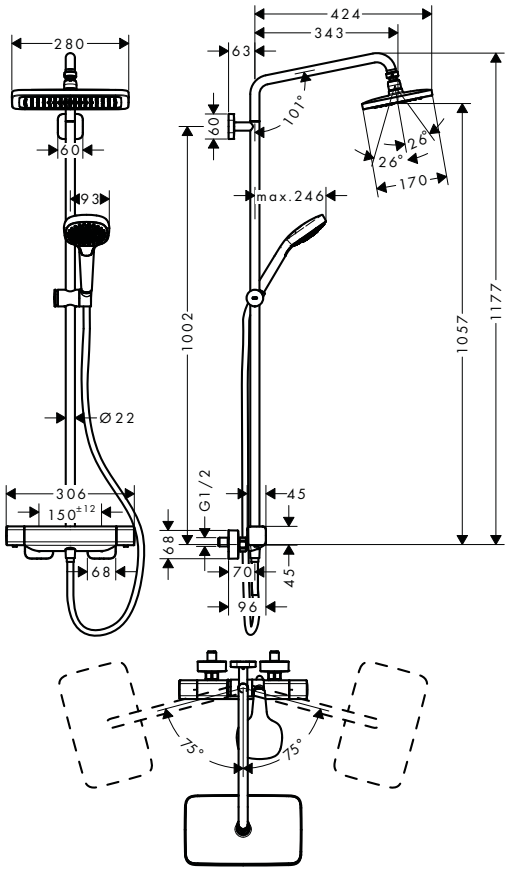

	finish	code no.	Euro
Croma E Showerpipe 280 1jet with thermostat	Chrome	27630000	710.00

Cool Contact · Select · Air Power · Quick Clean · XXL Performance

- consists of: overhead shower, hand shower, shower thermostat, shower hose, slider
- overhead shower Croma E 280 1jet
- shower head size: 280 x 170 mm
- spray type: RainAir
- ball-joint: overhead shower angle adjustable
- height-adjustable handshower holder with locking push-button slider
- rising pipe can be shortened in height
- shower arm length: 340 mm
- swivel shower arm
- maximum flow rate at 3 bar: 15 l/min
- operating pressure: min. 0.17 MPa/max. 1.0 MPa
- CoolContact thermostat: Prevents the housing from heating up, making showering even safer
- thermostat Ecostat E
- safety lock at 40° C
- suitable for continuous flow water heaters
- installation type: exposed installation
- connection thread G ½
- centre distance 150 ± 12 mm

Consisting of:

- **Croma E** Overhead shower 280 1jet (# 26257000)
- **Ecostat E** Shower thermostat for exposed installation (# 15773000)
- **Croma Select E** Hand shower Multi (# 26810400)
- **Isiflex** Shower hose 160 cm (# 28276XXX)

Water saving EcoSmart version:

Croma E Showerpipe 280 1jet EcoSmart with thermostat	Chrome	27660000	710.00

Measurements within scale drawings are in mm.

Technical specifications and units of measure are subject to change.

	finish	code no.	Euro
Croma E Showerpipe 280 1jet with bath thermostat	Chrome	27687000	875.00

Cool Contact · Air Power · Quick Clean · XXL Performance



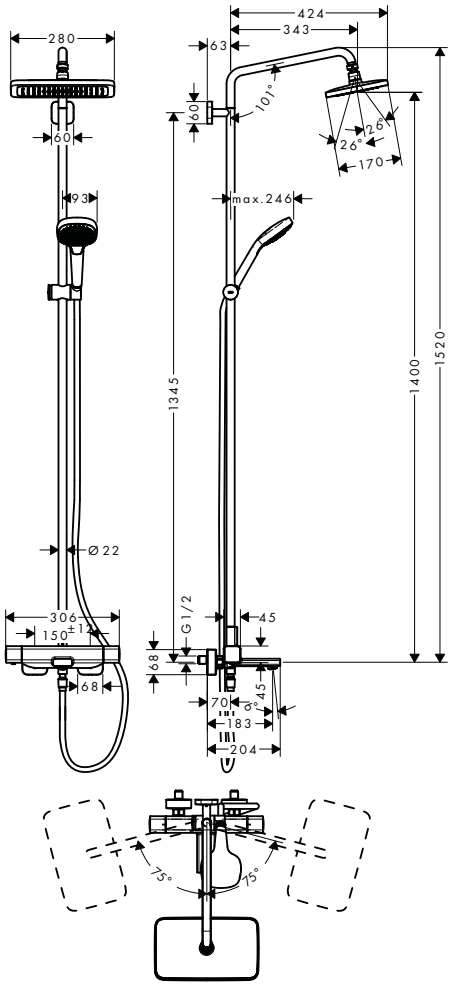

- consists of: overhead shower, hand shower, bath thermostat, shower hose, slider
- shower head size: 280 x 170 mm
- spray type: RainAir
- ball-joint: overhead shower angle adjustable
- height-adjustable handshower holder with locking push-button slider
- rising pipe can be shortened in height
- swivel shower arm
- maximum flow rate at 3 bar: 20.3 l/min
- flow rate RainAir spray (at 3 bar): 15 l/min
- operating pressure: min. 0.17 MPa/max. 1.0 MPa
- CoolContact thermostat: Prevents the housing from heating up, making showering even safer
- thermostat Ecostat E
- flow rate bath filler: 20 l/min
- safety lock at 40° C
- installation type: exposed installation
- connection thread G ½
- centre distance 150 ± 12 mm

Consisting of:

- **Croma E** Overhead shower 280 1jet (# 26257000)
- **Croma Select E** Hand shower Multi (# 26810400)
- **Ecostat E** Bath thermostat for exposed installation (# 15774000)
- **Isiflex** Shower hose 160 cm (# 28276XXX)

Measurements within scale drawings are in mm.

Technical specifications and units of measure are subject to change.

Croma Showerpipes



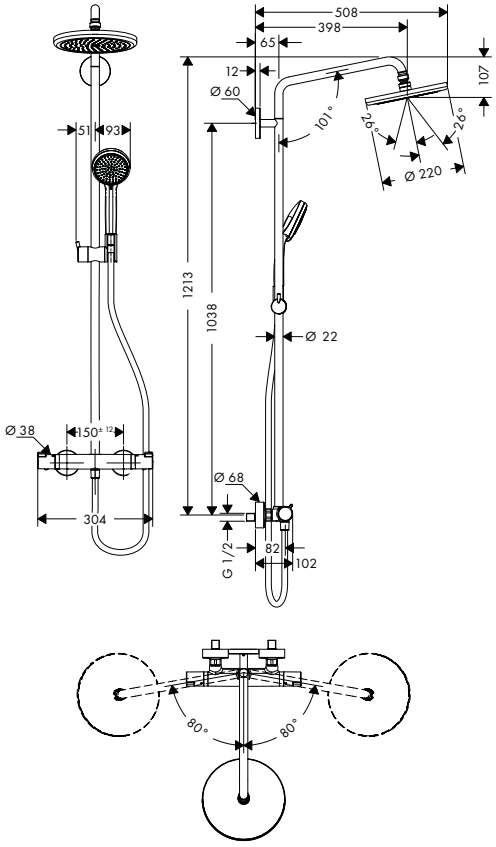

	finish	code no.	Euro
Croma Showerpipe 220 1jet with thermostat	Chrome	27185000	663.60

Air Power · Quick Clean · XXL Performance

- consists of: overhead shower, hand shower, shower thermostat, shower hose, slider
- overhead shower Croma 220
- shower head size: 220 mm
- spray type: RainAir
- ball-joint: overhead shower angle adjustable
- height-adjustable hand shower holder
- rising pipe can be shortened in height
- shower arm length: 400 mm
- swivel shower arm
- maximum flow rate at 3 bar: 15 l/min
- operating pressure: min. 1,3 bar/max. 10 bar
- thermostat Ecostat Comfort
- safety lock at 40° C
- adjustable hot water limitation
- outlets controlled via turning handle
- will not run two outlets at same time
- installation type: exposed installation
- connection dimension DN15
- connection thread G ½
- centre distance 150 ± 12 mm

Consisting of:
- **Croma** Overhead shower 220 1jet (# 26464000)
- **Croma 100** Hand shower Vario (# 28535000)
- **Isiflex** Shower hose 160 cm (# 28276XXX)

Water saving EcoSmart version:

· **Croma** Showerpipe 220 1jet EcoSmart 9 l/min with thermostat	Chrome	27188000	663.60

Optional parts:

· Wall bar spacer for Croma 100 Showerpipe	Chrome	95239000	10.20

Measurements within scale drawings are in mm.

Technical specifications and units of measure are subject to change.

	finish	code no.	Euro

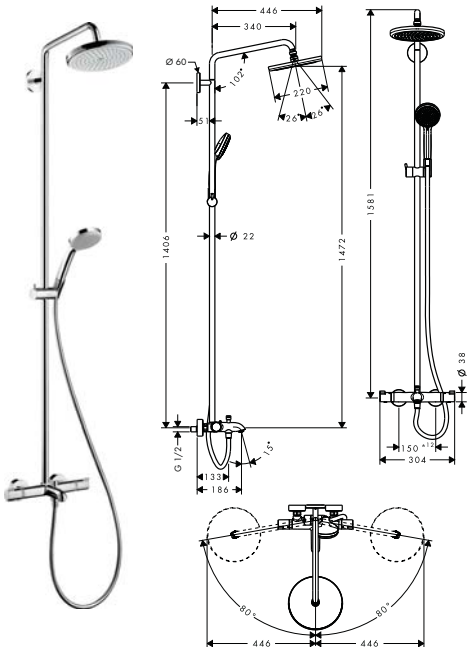

Croma Showerpipe 220 1jet with bath thermostat

Chrome — 27223000 — 861.80

Air Power · Quick Clean · XXL Performance

- consists of: overhead shower, hand shower, bath thermostat, shower hose, slider
- overhead shower Croma 220
- shower head size: 220 mm
- spray type: RainAir
- ball-joint: overhead shower angle adjustable
- height-adjustable hand shower holder
- swivel shower arm
- flow rate RainAir spray (at 3 bar): 17 l/ min
- operating pressure: min. 1,5 bar/ max. 10 bar
- thermostat Ecostat Comfort
- flow rate bath filler: 20 l/ min
- safety lock at 40° C
- adjustable hot water limitation
- outlets controlled via turning handle
- installation type: exposed installation
- connection dimension DN15
- connection thread G ½
- centre distance 150 ± 12 mm

Consisting of:

- **Croma** Overhead shower 220 1jet (# 26464000)
- **Croma 100** Hand shower Vario (# 28535000)
- **Isiflex** Shower hose 200 cm (# 28274000)

Optional parts:

- Wall bar spacer for Croma 100 Showerpipe — Chrome — 95239000 — 10.20

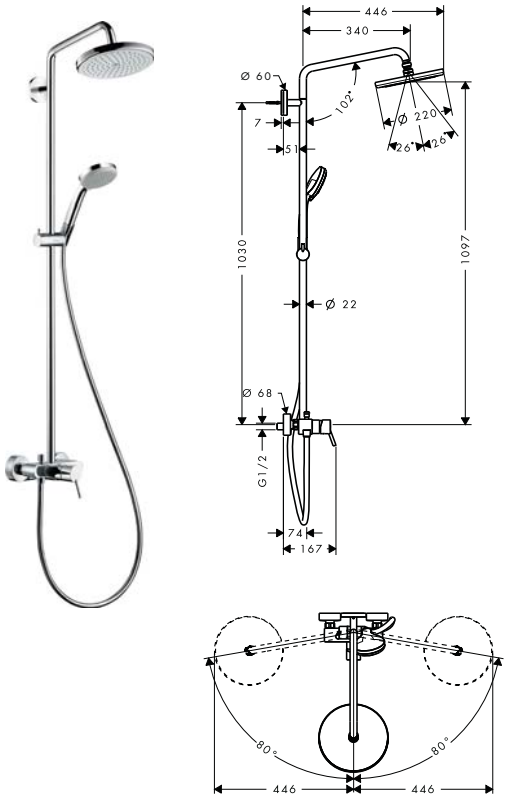

Croma Showerpipe 220 1jet with single lever mixer

Chrome — 27222000 — 623.50

Air Power · Quick Clean · XXL Performance

- consists of: overhead shower, hand shower, single lever shower mixer, shower hose, slider
- overhead shower Croma 220
- shower head size: 220 mm
- ball-joint: overhead shower angle adjustable
- spray type: RainAir
- height-adjustable hand shower holder
- shower arm length: 400 mm
- swivelling shower arm
- flow rate RainAir spray (at 3 bar): 16 l/ min
- operating pressure: min. 1,5 bar/ max. 10 bar
- installation type: exposed installation
- connection dimension DN15
- connection thread G ½
- centre distance 150 ± 12 mm
- ceramic cartridge
- temperature limitation adjustable
- rising pipe can be shortened in height

Consisting of:

- **Croma** Overhead shower 220 1jet (# 26464000)
- **Croma 100** Hand shower Vario (# 28535000)
- **Isiflex** Shower hose 160 cm (# 28276XXX)

Optional parts:

- Wall bar spacer for Croma 100 Showerpipe — Chrome — 95239000 — 10.20

Measurements within scale drawings are in mm.

Technical specifications and units of measure are subject to change.

	finish	code no.	Euro

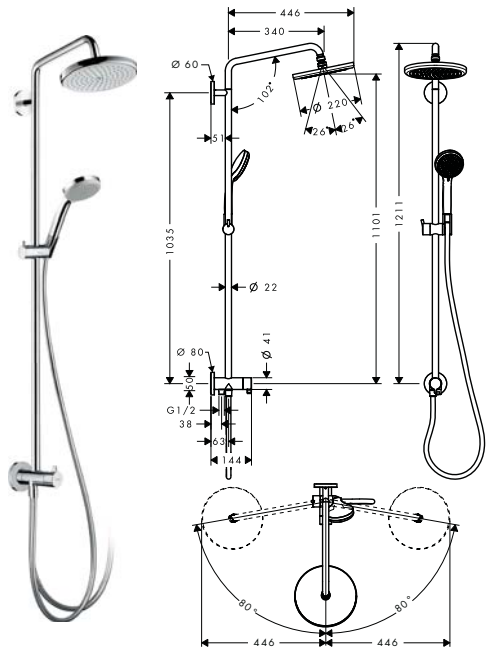

Croma Showerpipe 220 1jet Reno

Chrome — 27224000 — 503.90

Air Power · Quick Clean · XXL Performance

- consists of: overhead shower, hand shower, shower hose, slider
- overhead shower Croma 220
- shower head size: 220 mm
- spray type: RainAir
- ball-joint: overhead shower angle adjustable
- shower arm length: 400 mm
- swivelling shower arm
- height-adjustable hand shower holder
- flow rate RainAir spray (at 3 bar): 14 l/min
- operating pressure: min. 1 bar/max. 6 bar
- installation type: exposed installation
- water connection: Isiflex shower hose 80 cm
- connection dimension: DN15
- connection thread G ½
- rising pipe can be shortened in height

Consisting of:

- **Croma** Overhead shower 220 1jet (# 26464000)
- **Croma 100** Hand shower Vario (# 28535000)
- **Isiflex** Shower hose 160 cm (# 28276XXX)
- **Isiflex** Shower hose B 80 cm (# 28278000)

Optional parts:

- Wall bar spacer for Croma 100 Showerpipe — Chrome — 95239000 — 10.20

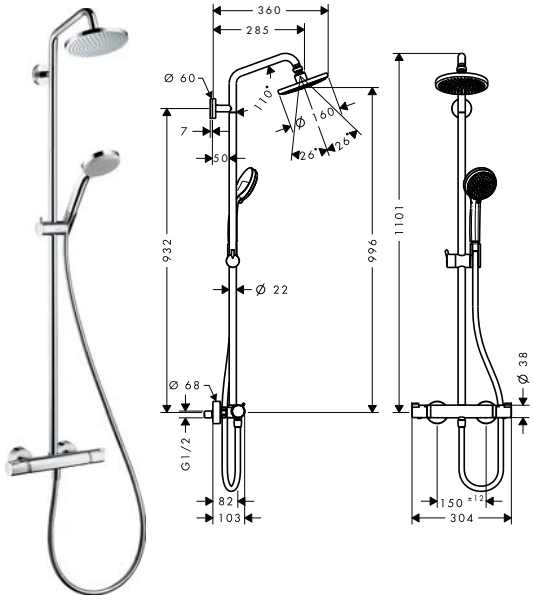

Croma Showerpipe 160 1jet with thermostat

Chrome — 27135000 — 469.30

Quick Clean · XXL Performance

- consists of: overhead shower, hand shower, shower thermostat, shower hose, slider
- overhead shower Croma 160
- shower head size: 160 mm
- spray type: Rain
- ball-joint: overhead shower angle adjustable
- height-adjustable hand shower holder
- rising pipe can be shortened in height
- shower arm length: 270 mm
- maximum flow rate at 3 bar: 17 l/min
- operating pressure: min. 1,5 bar/max. 10 bar
- thermostat Ecostat Comfort
- safety lock at 40° C
- adjustable hot water limitation
- outlets controlled via turning handle
- installation type: exposed installation
- connection dimension DN15
- connection thread G ½
- centre distance 150 ± 12 mm

Consisting of:

- **Croma** Overhead shower 160 1jet (# 27450000)
- **Croma 100** Hand shower Vario (# 28535000)
- **Isiflex** Shower hose 160 cm (# 28276XXX)

Optional parts:

- Wall bar spacer for Croma 100 Showerpipe — Chrome — 95239000 — 10.20

Measurements within scale drawings are in mm.

Technical specifications and units of measure are subject to change.



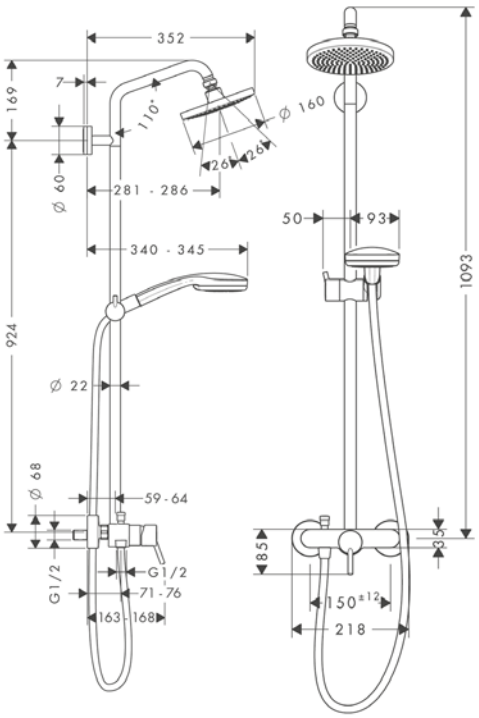

	finish	code no.	Euro
Croma Showerpipe 160 1jet with single lever mixer · consists of: overhead shower, hand shower, single lever shower mixer, shower hose, slider · overhead shower Croma 160 · shower head size: 160 mm · ball-joint: overhead shower angle adjustable · spray type: Rain · height-adjustable hand shower holder · shower arm length: 270 mm · adjustable hot water limitation · flow rate Rain spray (at 3 bar): 16 l/min · operating pressure: min. 0.12 MPa/max. 1.0 MPa · installation type: exposed installation · connection dimension DN15 · connection thread G ½ · centre distance 150 ± 12 mm · ceramic cartridge · rising pipe can be shortened in height	Chrome	27154000	459.70
Consisting of: · **Isiflex** Shower hose 160 cm (# 28276XXX) · **Croma** Overhead shower 160 1jet (# 27450000) · **Croma 100** Hand shower Vario (# 28535000)			
Optional parts: · Wall bar spacer for Croma 100 Showerpipe	Chrome	95239000	10.20

Measurements within scale drawings are in mm.

Technical specifications and units of measure are subject to change.

Crometta E Showerpipes



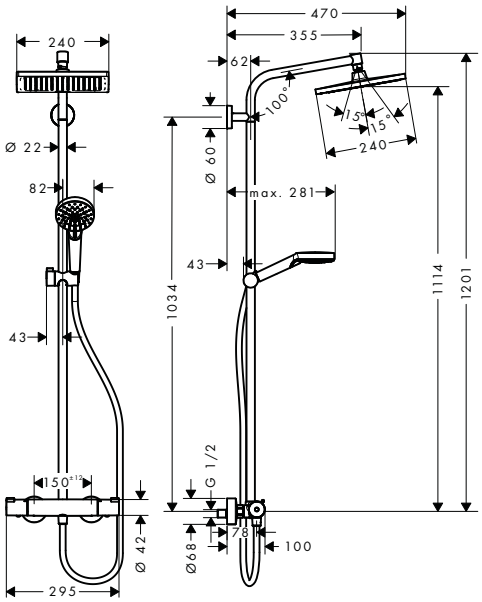

	finish	code no.	Euro
Crometta E Showerpipe 240 1jet with thermostat · consists of: overhead shower, hand shower, shower thermostat, shower hose, slider · overhead shower Crometta E 240 · shower head size: 240 x 240 mm · spray type: Rain · ball-joint: overhead shower angle adjustable · slide inclination angle can be adjusted by 45° · height-adjustable hand shower holder · rising pipe can be shortened in height · shower arm length: 350 mm · flow rate Rain spray (at 3 bar): 15 l/min · operating pressure: min. 0.18 MPa/max. 1.0 MPa · thermostat Ecostat 1001 CL · safety lock at 40° C · adjustable hot water limitation · outlets controlled via turning handle · installation type: exposed installation · connection dimension DN15 · connection thread G ½ · centre distance 150 ± 12 mm	Chrome	27271000	429.60
Consisting of: · **Crometta E** Overhead shower 240 1jet (# 26726000) · **Crometta** Hand shower Vario (# 26330400) · **Isiflex** Shower hose 160 cm (# 28276XXX)			
Water saving EcoSmart version: · **Crometta E** Showerpipe 240 1jet Green with thermostat	Chrome	27281000	431.70
Optional parts: · Wall bar spacer for Croma 100 Showerpipe	Chrome	95239000	10.20

Measurements within scale drawings are in mm.

Technical specifications and units of measure are subject to change.

	finish	code no.	Euro
Crometta E Showerpipe 240 1jet with bath thermostat	Chrome	27298000	594.90



- consists of: overhead shower, hand shower, bath thermostat, shower hose, slider
- overhead shower Crometta E 240
- shower head size: 240 x 240 mm
- spray type: Rain
- ball-joint: overhead shower angle adjustable
- slide inclination angle can be adjusted by 45°
- height-adjustable hand shower holder
- rising pipe can be shortened in height
- shower arm length: 350 mm
- flow rate Rain spray (at 3 bar): 17 l/min
- operating pressure: min. 1,5 bar/ max. 10 bar
- thermostat Ecostat Comfort
- flow rate bath filler: 20 l/min
- safety lock at 40° C
- adjustable hot water limitation
- outlets controlled via turning handle
- installation type: exposed installation
- connection dimension DN15
- connection thread G ½
- centre distance 150 ± 12 mm

Consisting of:

- **Crometta E** Overhead shower 240 1jet (# 26726000)
- **Crometta** Hand shower Vario (# 26330400)
- **Isiflex** Shower hose 160 cm (# 28276XXX)

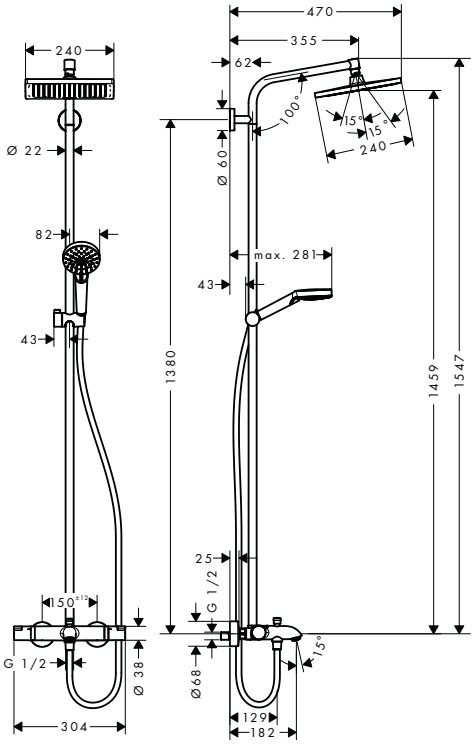

Optional parts:

· Wall bar spacer for Croma 100 Showerpipe	Chrome	95239000	10.20

Measurements within scale drawings are in mm.

Technical specifications and units of measure are subject to change.

	finish	code no.	Euro

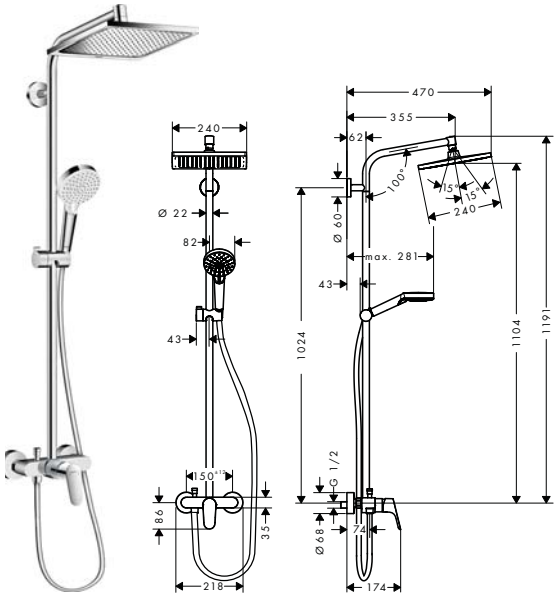

Crometta E Showerpipe 240 1jet with single lever mixer

Chrome 27284000 396.60

- consists of: overhead shower, hand shower, single lever shower mixer, shower hose, slider
- overhead shower Crometta E 240
- shower head size: 240 x 240 mm
- ball-joint: overhead shower angle adjustable
- spray type: Rain
- slide inclination angle can be adjusted by 45°
- height-adjustable hand shower holder
- shower arm length: 350 mm
- adjustable hot water limitation
- maximum flow rate at 3 bar: 13 l/ min
- flow rate Rain spray (at 3 bar): 15 l/ min
- operating pressure: min. 0.18 MPa/ max. 1.0 MPa
- installation type: exposed installation
- connection dimension DN15
- connection thread G ½
- centre distance 150 ± 12 mm
- ceramic cartridge
- rising pipe can be shortened in height

Consisting of:

- **Crometta E** Overhead shower 240 1jet (# 26726000)
- **Crometta** Hand shower Vario (# 26330400)
- **Isiflex** Shower hose 160 cm (# 28276XXX)

Optional parts:

- Wall bar spacer for Croma 100 Showerpipe — Chrome — 95239000 — 10.20

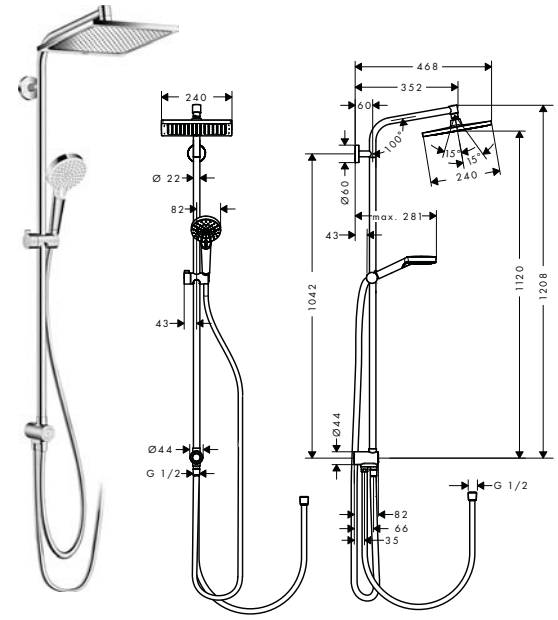

Crometta E Showerpipe 240 1jet EcoSmart 9 l/ min Reno

Chrome 27289000 352.50

- consists of: overhead shower, hand shower, shower hose, slider, wall connector
- overhead shower Crometta E 240
- shower head size: 240 x 240 mm
- spray type: Rain
- ball-joint: overhead shower angle adjustable
- shower arm length: 350 mm
- slide inclination angle can be adjusted by 45°
- height-adjustable hand shower holder
- maximum flow rate at 3 bar: 9 l/ min
- flow rate Rain spray (at 3 bar): 9 l/ min
- installation type: exposed installation
- water connection: Isiflex shower hose 80 cm
- connection dimension: DN15
- connection thread G ½
- rising pipe can be shortened in height

Consisting of:

- **Crometta E** Overhead shower 240 1jet EcoSmart 9 l/ min (# 26727000)
- **Crometta** Hand shower Vario EcoSmart 9 l/ min (# 26332400)
- **Isiflex** Shower hose 160 cm (# 28276XXX)
- **Isiflex** Shower hose B 80 cm (# 28278000)

Optional parts:

- Wall bar spacer for Croma 100 Showerpipe — Chrome — 95239000 — 10.20

Measurements within scale drawings are in mm.

Technical specifications and units of measure are subject to change.

Crometta S Showerpipes



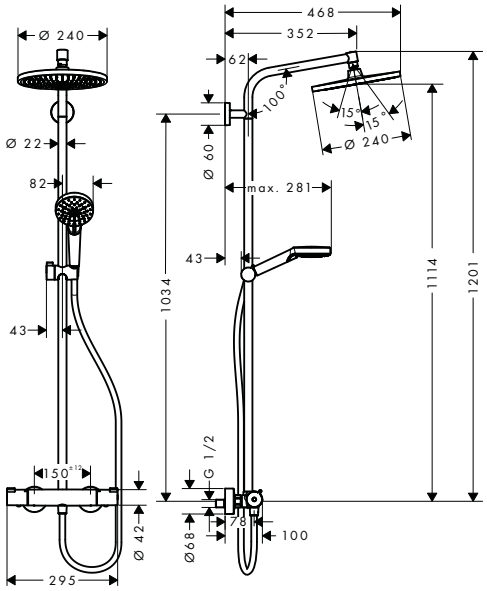

	finish	code no.	Euro
Crometta S Showerpipe 240 1jet with thermostat · consists of: overhead shower, hand shower, shower thermostat, shower hose, slider · overhead shower Crometta S 240 · shower head size: 240 mm · spray type: Rain · ball-joint: overhead shower angle adjustable · slide inclination angle can be adjusted by 45° · height-adjustable hand shower holder · rising pipe can be shortened in height · shower arm length: 350 mm · maximum flow rate at 3 bar: 16 l/min · flow rate Rain spray (at 3 bar): 16 l/min · operating pressure: min. 0.12 MPa/max. 1.0 MPa · thermostat Ecostat 1001 CL · safety lock at 40° C · adjustable hot water limitation · outlets controlled via turning handle · installation type: exposed installation · connection dimension DN15 · connection thread G ½ · centre distance 150 ± 12 mm	Chrome	27267000	429.60
Consisting of: · **Crometta S** Overhead shower 240 1jet (# 26723000) · **Crometta** Hand shower Vario (# 26330400) · **Isiflex** Shower hose 160 cm (# 28276XXX)			
Water saving EcoSmart version: · **Crometta S** Showerpipe 240 1jet EcoSmart 9 l/min with thermostat	Chrome	27268000	431.70
Optional parts: · Wall bar spacer for Croma 100 Showerpipe	Chrome	95239000	10.20

Measurements within scale drawings are in mm.

Technical specifications and units of measure are subject to change.

	finish	code no.	Euro
Crometta S Showerpipe 240 1jet with bath thermostat	Chrome	27320000	594.90



- consists of: overhead shower, hand shower, bath thermostat, shower hose, slider
- overhead shower Crometta S 240
- shower head size: 240 mm
- spray type: Rain
- ball-joint: overhead shower angle adjustable
- slide inclination angle can be adjusted by 45°
- height-adjustable hand shower holder
- rising pipe can be shortened in height
- shower arm length: 350 mm
- flow rate Rain spray (at 3 bar): 17 l/min
- operating pressure: min. 1,5 bar/max. 10 bar
- thermostat Ecostat Comfort
- flow rate bath filler: 20 l/min
- safety lock at 40° C
- adjustable hot water limitation
- outlets controlled via turning handle
- installation type: exposed installation
- connection dimension DN15
- connection thread G ½
- centre distance 150 ± 12 mm

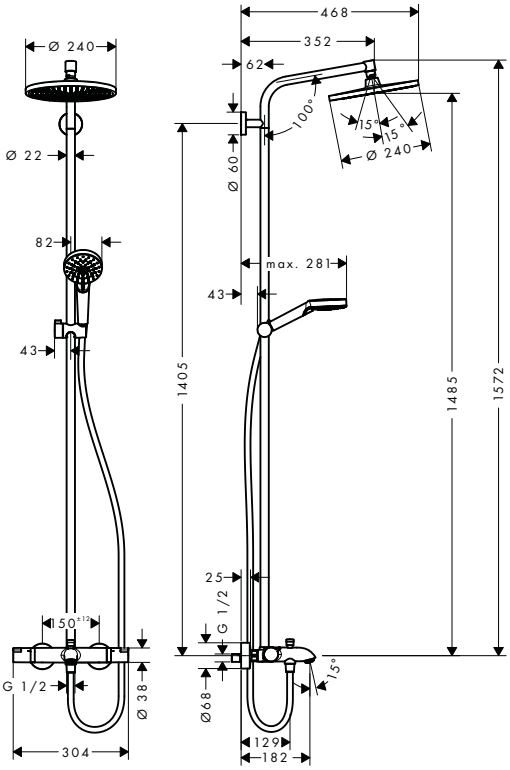

Consisting of:

- **Crometta S** Overhead shower 240 1jet (# 26723000)
- **Crometta** Hand shower Vario (# 26330400)
- **Isiflex** Shower hose 160 cm (# 28276XXX)

Optional parts:

· Wall bar spacer for Croma 100 Showerpipe	Chrome	95239000	10.20

Measurements within scale drawings are in mm.

Technical specifications and units of measure are subject to change.

	finish	code no.	Euro

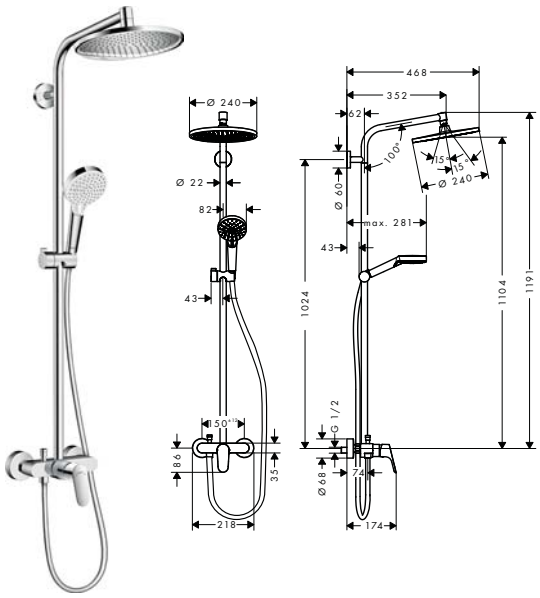

Crometta S Showerpipe 240 1jet with single lever mixer

Chrome — 27269000 — 396.60

- consists of: overhead shower, hand shower, single lever shower mixer, shower hose, slider
- overhead shower Crometta S 240
- shower head size: 240 mm
- ball-joint: overhead shower angle adjustable
- spray type: Rain
- slide inclination angle can be adjusted by 45°
- height-adjustable hand shower holder
- shower arm length: 350 mm
- adjustable hot water limitation
- flow rate Rain spray (at 3 bar): 15 l/min
- operating pressure: min. 0.18 MPa/max. 1.0 MPa
- installation type: exposed installation
- connection dimension DN15
- connection thread G ½
- centre distance 150 ± 12 mm
- ceramic cartridge
- rising pipe can be shortened in height

Consisting of:

- **Crometta S** Overhead shower 240 1jet (# 26723000)
- **Crometta** Hand shower Vario (# 26330400)
- **Isiflex** Shower hose 160 cm (# 28276XXX)

Optional parts:

- Wall bar spacer for Croma 100 Showerpipe — Chrome — 95239000 — 10.20

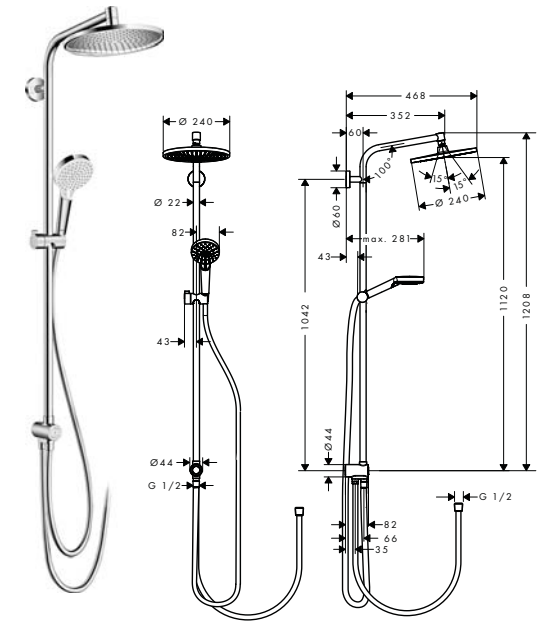

Crometta S Showerpipe 240 1jet EcoSmart 9 l/min Reno

Chrome — 27270000 — 352.50

- consists of: overhead shower, hand shower, shower hose, slider, wall connector
- overhead shower Crometta S 240
- shower head size: 240 mm
- spray type: Rain
- ball-joint: overhead shower angle adjustable
- shower arm length: 350 mm
- slide inclination angle can be adjusted by 45°
- height-adjustable hand shower holder
- flow rate Rain spray (at 3 bar): 9 l/min
- installation type: exposed installation
- water connection: Isiflex shower hose 80 cm
- connection dimension: DN15
- connection thread G ½
- rising pipe can be shortened in height

Consisting of:

- **Crometta S** Overhead shower 240 1jet EcoSmart 9 l/min (# 26724000)
- **Crometta** Hand shower Vario EcoSmart 9 l/min (# 26332400)
- **Isiflex** Shower hose 160 cm (# 28276XXX)
- **Isiflex** Shower hose B 80 cm (# 28278000)

Optional parts:

- Wall bar spacer for Croma 100 Showerpipe — Chrome — 95239000 — 10.20

Measurements within scale drawings are in mm.

Technical specifications and units of measure are subject to change.

Crometta Showerpipes



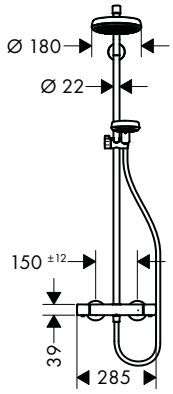

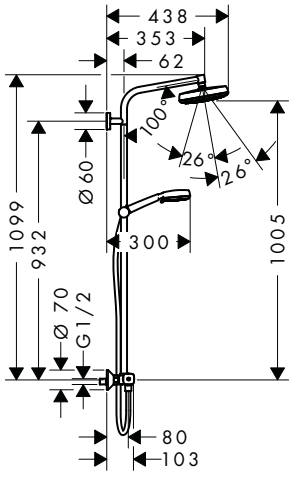

	finish	code no.	Euro
Crometta Showerpipe 160 1jet with thermostat	White/Chrome	27264400	408.80

Quick Clean | XXL Performance

- consists of: overhead shower, hand shower, shower thermostat, shower hose, slider
- overhead shower Crometta 160
- shower head size: 160 mm
- spray type: Rain
- ball-joint: overhead shower angle adjustable
- slide inclination angle can be adjusted by 45°
- height-adjustable hand shower holder
- rising pipe can be shortened in height
- shower arm length: 350 mm
- maximum flow rate at 3 bar: 17 l/min
- flow rate Rain spray (at 3 bar): 17 l/min
- operating pressure: min. 1,5 bar/max. 10 bar
- thermostat Ecostat Universal
- safety lock at 40° C
- adjustable hot water limitation
- outlets controlled via turning handle
- installation type: exposed installation
- connection dimension DN15
- connection thread G ½
- centre distance 150 ± 12 mm

Consisting of:

- **Crometta** Overhead shower 160 1jet (# 26577XXX)
- **Crometta 100** Hand shower Vario (# 26824400)
- **Isiflex** Shower hose 160 cm (# 28276XXX)

Water saving EcoSmart version:

· **Crometta** Showerpipe 160 1jet EcoSmart 9 l/min with thermostat	White/Chrome	27265400	408.80

Optional parts:

· Wall bar spacer for Croma 100 Showerpipe	Chrome	95239000	10.20

Measurements within scale drawings are in mm.

Technical specifications and units of measure are subject to change.

	finish	code no.	Euro

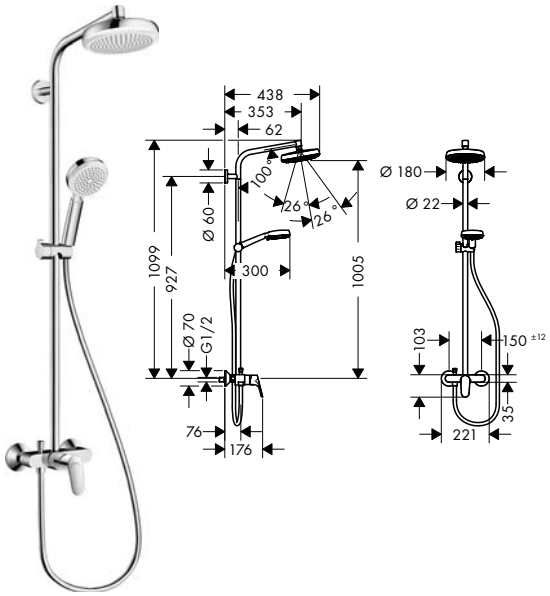

Crometta Showerpipe 160 1jet with single lever mixer

White/Chrome — 27266400 — 385.40

Quick Clean · XXL Performance

- consists of: overhead shower, hand shower, single lever shower mixer, shower hose, slider
- overhead shower Crometta 160
- shower head size: 160 mm
- ball-joint: overhead shower angle adjustable
- spray type: Rain
- slide inclination angle can be adjusted by 45°
- height-adjustable hand shower holder
- shower arm length: 350 mm
- adjustable hot water limitation
- flow rate Rain spray (at 3 bar): 16 l/min
- operating pressure: min. 1 bar/max. 10 bar
- installation type: exposed installation
- connection dimension DN15
- connection thread G ½
- centre distance 150 ± 12 mm
- ceramic cartridge
- temperature limitation adjustable
- rising pipe can be shortened in height

Consisting of:

- **Crometta** Overhead shower 160 1jet (# 26577XXX)
- **Crometta 100** Hand shower Vario (# 26824400)
- **Isiflex** Shower hose 160 cm (# 28276XXX)

Optional parts:

- Wall bar spacer for Croma 100 Showerpipe — Chrome — 95239000 — 10.20

Raindance shower panels

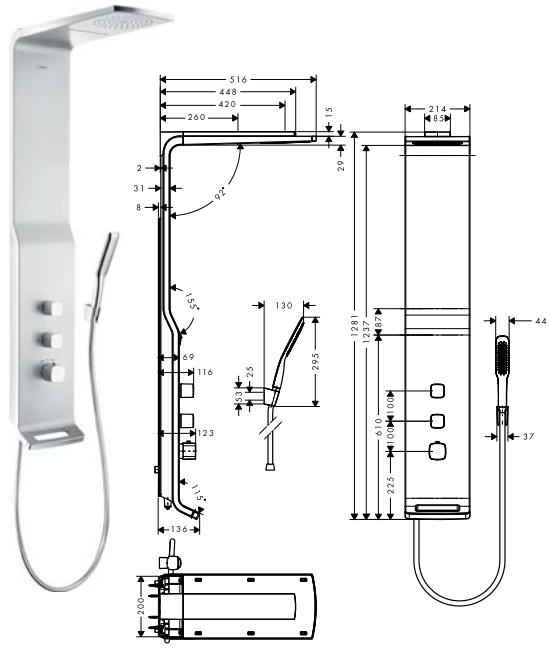

Raindance Shower panel Lift 180 2jet for exposed installation

Satin Chrome — 27008000 — 2,449.90
White/Chrome — 27008400 — 2,449.90

Air Power · Quick Clean · XXL Performance

- consists of: shower panel, overhead shower, baton hand shower, shower hose, shower holder
- overhead shower Raindance S 180 Air
- shower head size: 180 mm
- shower arm length: 420 mm
- height adjustment: 200 mm
- spray type (overhead shower): RainAir, wide flood jet
- flow rate RainAir spray (at 3 bar): 14 l/min
- flow rate RainFlow spray (at 3 bar): 17 l/min
- scald protection at 40°
- adjustable hot water limitation
- isolated water conduction
- centre distance: 150 ± 12 mm
- connection thread G ½
- site: wall
- installation type: exposed installation
- suitable for continuous flow water heaters
- connection dimension: DN15

Consisting of:

- **PuraVida** Baton hand shower 120 1jet (# 28558XXX)
- Shower holder Porter S (# 28331XXX)
- **Isiflex** Shower hose 160 cm (# 28276XXX)

Optional parts:

- **Raindance** Corner fitting set for shower panel Lift 180 2jet for exposed installation — 27999000 — 203.50

Measurements within scale drawings are in mm.

Technical specifications and units of measure are subject to change.

Thermostatic mixers / valves



Thermostatic mixers and combis for exposed installation page 226



Thermostatic mixers for concealed installation page 240



hansgrohe Exposed thermostatic mixers

Selected exposed thermostatic mixers at a glance

		ShowerTablet® Select		**Ecostat® Select**	**Ecostat® E**
					
		ShowerTablet® Select Bath thermostat 700	ShowerTablet® Select Bath thermostat 300	Ecostat Select® Bath thermostat	Ecostat® E Bath thermostat
Versions	Standard	13183, -000, -400	13151, -000, -400	13141, -000, -400	15774, -000
	Bath filler flow rate (l/min in the standard version)	20 l/min	20 l/min	20 l/min	18.6 l/min
Features	Scald protection at 40°C	■	■	■	■
	Adjustable temperature limit	■	■	■	■
	EcoStop button				■
	Consumer control	Select	Select	Turn	Turn
	Shelf	■	■	■	
	Concealed connection for an additional user				
Uniques	Select	■	■		
	CoolContact	■	■	■	■
	Air Power	■	■	■	
	QuickClean	■	■	■	■
					
		ShowerTablet® Select Thermostat 700 Universal	ShowerTablet® Select Shower thermostat 300	Ecostat Select® Shower thermostat	Ecostat® E Shower thermostat
Versions	Standard	13184, -000, -400	13171, -000, -400	13161, -000, -400	15773, -000
Features	Scald protection at 40°C	■	■	■	■
	Adjustable temperature limit	■	■	■	■
	EcoStop button		■	■	■
	Consumer control	Select	Select	Turn	Turn
	Shelf	■	■	■	
	Concealed connection for an additional user	■			
Uniques	Select	■	■		
	CoolContact	■	■	■	■

■ Available

Ecostat®

		
Ecostat® Bath thermostat Comfort	Ecostat® Bath thermostat Universal	Ecostat® Bath thermostat 1001 CL
13114, -000, -140, -340, -670, -700, -990	13123, -000	13201, -000
23 l/min	20 l/min	20 l/min
■	■	■
■	■	■
Turn	Turn	Turn
■	■	■
■	■	

		
Ecostat® Shower thermostat Comfort	Ecostat® Shower thermostat Universal	Ecostat® Shower thermostat 1001 CL
13116, -000, -140, -340, -670, -700, -990	13122, -000	13211, -000
■	■	■
■	■	■
■	■	■
Turn	Turn	Turn

All specified flow rates are based on an operating pressure of **0.3** MPa (3 bar).

hansgrohe Concealed thermostatic mixers

Selected concealed thermostatic mixers at a glance

		PuraVida	**RainSelect**		
					
Versions	Surface glass			■	■
	Variants incl. shower support			■	■
Thermostat	Thermostat solution for 1 function				
	Thermostat solution for 2 functions	15771, -000, -400	15380, -000, -140, -340, -670, -700, -990	15355, -000, -400, -600 15359, -000, -400, -600	15359, -000, -400, -600 (bathtub)
	Thermostat solution for 3 functions	15777, -000	15381, -000, -700	15356, -000, -400, -600	
	Thermostat solution for 4 functions		15382, -000, -140, -340, -670, -700, -990	15357, -000, -400, -600	
	Thermostat solution for 5 functions		15384, -000, -700	15358, -000, -400, -600	
Mixer	Mixer solution for 1 function				
	Mixer solution for 2 functions				
Features	Scald protection at 40°C	■	■	■	■
	Adjustable temperature limit	■	■	■	■
	Consumer control	Turn	Select	Select	Select
	based on iBox universal	■			

■ Available

ShowerSelect Glass	**ShowerSelect**	**ShowerSelect S**	**Ecostat Square**	**Ecostat E**	**Ecostat S**
					
■					
	■				
15737, -400, -600	15762, -000	15744, -000	15712, -000	15707, -000	15757, -000
15738, -400, -600	15763, -000, -140, -340, -670, -700, -990	15743, -000, -140, -340, -670, -700, -990 15765, -000	15714, -000, -140, -340, -670, -700, -990	15708, -000	15758, -000, -140, -340, -670, -700, -990
15736, -400, -600 + 15734, -400, -600	15764, -000 + 15760, -000	15745, -000 + 15741, -000		15706, -000 15705, -000	15755, -000 15756, -000
15736, -400, -600 + 15735, -400, -600	15764, -000 + 15761, -000	15745, -000 + 15742, -000			
	15767, -000	15747, -000			
	15768, -000	15748, -000			
■	■	■	■	■	■
■	■	■	■	■	■
Select	Select	Select	Turn	Turn	Turn
■	■	■	■	■	■

All specified flow rates are based on an operating pressure of **0.3** MPa (3 bar).

hansgrohe concealed finish sets based on the iBox universal

Concealed installation overview of functions





1 function



ShowerSelect Thermostat



ShowerSelect
Thermostat
15762, -000
Glass surface
15737, -400, -600

ShowerSelect Mixer



ShowerSelect
Mixer
15767, -000

Ecostat Thermostat



Ecostat
Thermostat
for 1 function
15712, -000



Ecostat E
Thermostat
15707, -000

ShowerSelect Thermostat



ShowerSelect S
Thermostat
15744, -000

ShowerSelect Mixer



ShowerSelect S
Mixer
15747, -000

Ecostat Thermostat



Ecostat S
Thermostat
15757, -000

You will be able to satisfy any of your customers' requirements – and help them keep to their budgets – with hansgrohe's complete concealed range for between one and four functions. The choice starts with the operation: are the showers and spray types to be controlled conventionally by turning, or with complete ease at the touch of a button? Your customers also have complete freedom of design: the ShowerSelect is now also available in a round design and as a mixer. Ecostat thermostats are available as a circle, and now also as a square with rounded corners. Plenty of options for attractive installations that blend beautifully with the bathroom.



2 functions



ShowerSelect Thermostat



ShowerSelect
Thermostat
#15763, -000
Glass surface
#15738, -400, -600



ShowerSelect
Thermostat
with Fixfit and Porter
#15765, -000

ShowerSelect Mixer



ShowerSelect
Mixer
#15768, -000

Ecostat Thermostat



Ecostat
Thermostat
for 2 functions
#15714, -000



Ecostat E
Thermostat
#15708, -000

ShowerSelect Thermostat



ShowerSelect S
Thermostat
#15743, -000

ShowerSelect Mixer



ShowerSelect S
Mixer
#15748, -000

Ecostat Thermostat



Ecostat S
Thermostat
#15758, -000



3 FUNCTIONS



ShowerSelect



ShowerSelect
Valve
15764, -000



ShowerSelect
Thermostat highflow
15760, -000

Ecostat Thermostatic mixer



iControl E
Valve
15777, -000



Ecostat E
Thermostatic mixer highflow
15706, -000
Thermostatic mixer
15705, -000 (not shown)

ShowerSelect



ShowerSelect S
Valve
15745, -000



ShowerSelect S
Thermostatic mixer highflow
15741, -000

Ecostat Thermostat mixer



Trio/Quattro S
Shut-off/ diverter valve
15932, -000



Ecostat S
Thermostatic mixer highflow
15756, -000
Thermostatic mixer
15755, -000 (not shown)



Shut-off valve S
15972, -000



4 FUNCTIONS



ShowerSelect



ShowerSelect
Valve
15764, -000



ShowerSelect
Thermostatic mixer highflow
15761, -000

Ecostat Thermostatic mixer



iControl E
Valve
15777, -000



Ecostat E
Thermostatic mixer highflow
15706, -000



Absperrventil E
15978, -000

ShowerSelect



ShowerSelect S
Valve
15745, -000



ShowerSelect S
Thermostatic mixer highflow
15742, -000

Ecostat Thermostatic mixer



Trio/Quattro S
Shut-off/ diverter valve
15932, -000



Shut-off valve S
15972, -000



Ecostat S
Thermostatic mixer highflow
15756, -000



Shut-off valve S
15972, -000

Thermostatic mixers and combis for exposed installation



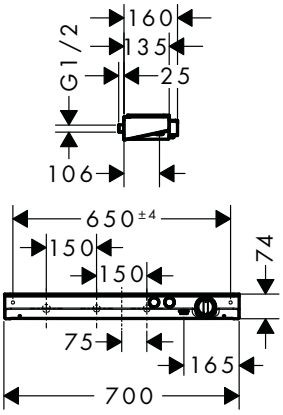

	finish	code no.	Euro
ShowerTablet Select Thermostat 700 universal for exposed installation for 2 functions	Chrome	13184000	1,145.60
	White/Chrome	13184400	1,145.60

Cool Contact | Select

- 2 functions
- simultaneous utilization by 2 outlets
- centre distance: 150 mm
- CoolContact thermostat: Prevents the housing from heating up, making showering even safer
- maximum flow rate at 3 bar: 28 l/ min
- flow rate hand shower connection at 3 bar: 14 l/ min
- flow rate upper outlet: 28 l/ min
- Select valve, thermostat cartridge
- min. operating pressure: 1 bar
- max. operating pressure: 10 bar
- safety lock at 40° C
- temperature limitation adjustable
- with isolated water conduction
- non-return valve
- with silencer
- material handles: metal
- shelf made of safety glass
- surface of the shelf at color variant -000 = mirror glass, at color variant -400 = white glass
- control of an external shower or bath tub filler via concealed connection G ½ possible
- connection type: G ½
- connection dimension: DN15
- dirt filter included
- Thermostat is delivered with buttons Rain large and hand shower

Optional parts:

· **Rainmaker Select** Overhead shower 460 1jet with ceiling connector	White/Chrome	24002400	1,489.40
	Black/Chrome	24002600	1,489.40
· **Rainmaker Select** Overhead shower 460 1jet with shower arm	White/Chrome	24003400	1,603.90
	Black/Chrome	24003600	1,603.90

Measurements within scale drawings are in mm.

Technical specifications and units of measure are subject to change.

	finish	code no.	Euro
ShowerTablet Select Bath thermostat 700 for exposed installation	Chrome	13183000	1,374.70
	White/Chrome	13183400	1,374.70



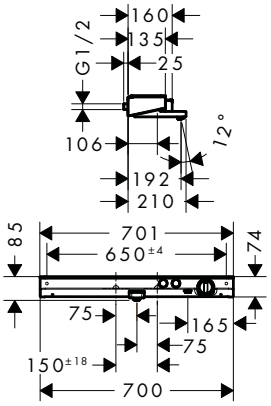

- projection 192 mm
- 2 functions
- simultaneous utilization by 2 outlets
- centre distance: 150 ± 18 mm
- CoolContact thermostat: Prevents the housing from heating up, making showering even safer
- flow rate for bath spout at 3 bar: 20 l/ min
- flow rate of hand shower at 3 bar: 15 l/ min
- Select valve, thermostat cartridge
- min. operating pressure: 1 bar
- max. operating pressure: 10 bar
- safety lock at 40° C
- temperature limitation adjustable
- with isolated water conduction
- non-return valve
- with silencer
- material handles: metal
- shelf made of safety glass
- surface of the shelf at color variant -000 = mirror glass, at color variant -400 = white glass
- connection type: G ½
- connection dimension: DN15
- dirt filter included
- Thermostat is delivered with buttons hand shower and bath tub

	finish	code no.	Euro
ShowerTablet Select Shower thermostat 300 for exposed installation	Chrome	13171000	456.70
	White/Chrome	13171400	456.70



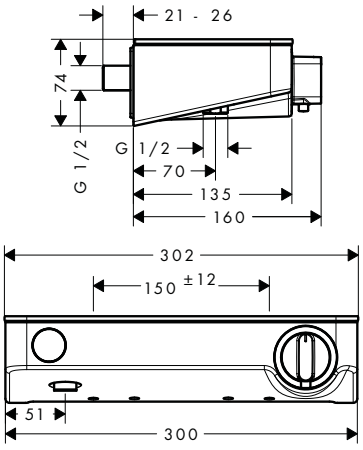

- 1 function
- centre distance: 150 ± 12 mm
- CoolContact thermostat: Prevents the housing from heating up, making showering even safer
- maximum flow rate at 3 bar: 14 l/ min
- flow rate hand shower connection at 3 bar: 14 l/ min
- thermostat cartridge, Select valve
- min. operating pressure: 1 bar
- max. operating pressure: 10 bar
- safety lock at 40° C
- temperature limitation adjustable
- with isolated water conduction
- non-return valve
- with silencer
- material handles: metal
- shelf made of safety glass
- surface of the shelf at color variant -000 = mirror glass, at color variant -400 = white glass
- in case of installation on existing G ¾ connections, adaptor # 02026000 must be used
- connection type: G ½
- connection dimension: DN15
- dirt filter included
- Thermostat is delivered with button hand shower

Consisting of:
- S-Union Set (# 95772000)

Optional parts:

· S-connections adapter G ¾ for renovation	Chrome	02026000	30.10

Measurements within scale drawings are in mm.

Technical specifications and units of measure are subject to change.

	finish	code no.	Euro
ShowerTablet Select Bath thermostat 300 for exposed installation	Chrome	13151000	610.70
	White/Chrome	13151400	610.70



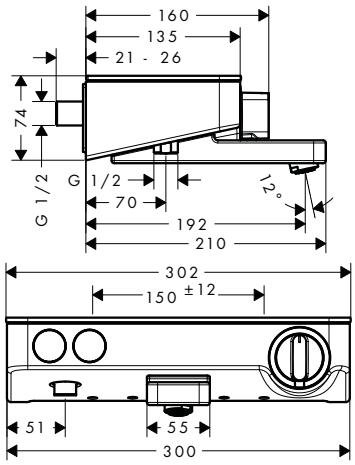

- projection 192 mm
- 2 functions
- simultaneous utilization by 2 outlets
- centre distance: 150 ± 12 mm
- CoolContact thermostat: Prevents the housing from heating up, making showering even safer
- flow rate for bath spout at 3 bar: 20 l/ min
- flow rate of hand shower at 3 bar: 16 l/ min
- thermostat cartridge, Select valve
- min. operating pressure: 1 bar
- max. operating pressure: 10 bar
- safety lock at 40° C
- temperature limitation adjustable
- with isolated water conduction
- non-return valve
- with silencer
- material handles: metal
- shelf made of safety glass
- surface of the shelf at color variant -000 = mirror glass, at color variant -400 = white glass
- in case of installation on existing G ¾ connections, adaptor # 02026000 must be used
- connection type: G ½
- connection dimension: DN15
- dirt filter included
- Thermostat is delivered with buttons hand shower and bath tub

Consisting of:
- S-Union Set (# 95772000)

Optional parts:

· S-connections adapter G ¾ for renovation	Chrome	02026000	30.10



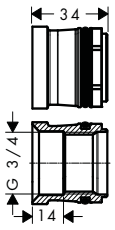

S-connections adapter G ¾ for renovation

Chrome	02026000	30.10

- installation type: exposed installation
- connection dimension G ¾
- adapter for installation on existing s-unions G ½ x G ¾

Measurements within scale drawings are in mm.

Technical specifications and units of measure are subject to change.

	finish	code no.	Euro
Ecostat Select Bath thermostat for exposed installation	Chrome	13141000	456.70
	White/Chrome	13141400	456.70



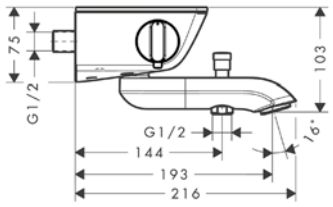

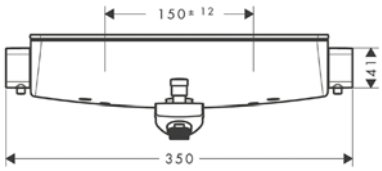

- projection 193 mm
- 2 functions
- centre distance: 150 ± 12 mm
- CoolContact thermostat: Prevents the housing from heating up, making showering even safer
- flow rate for bath spout at 3 bar: 20 l/ min
- flow rate of hand shower at 3 bar: 12 l/ min
- thermostat cartridge, ceramic valve 180°
- min. operating pressure: 1 bar
- max. operating pressure: 10 bar
- safety lock at 40° C
- temperature limitation adjustable
- with isolated water conduction
- intrinsically safe against backflow
- with silencer
- material handles: metal
- shelf made of safety glass
- in case of installation on existing G ¾ connections, adaptor # 02026000 must be used
- surface of the shelf at color variant -000 = mirror glass, at color variant -400 = white glass
- connection type: s-shaped connections
- connection dimension: DN15
- dirt filter included

Consisting of:
- S-Union Set (# 95772000)

Optional parts:

· S-connections adapter G ¾ for renovation	Chrome	02026000	30.10

Ecostat Select Shower thermostat for exposed installation	Chrome	13161000	351.70
	White/Chrome	13161400	351.70



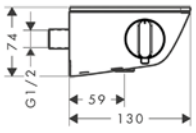

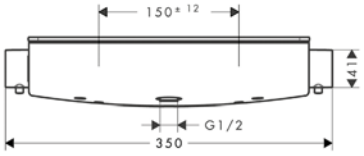

- 1 function
- volume control for 1 outlet
- centre distance: 150 ± 12 mm
- CoolContact thermostat: Prevents the housing from heating up, making showering even safer
- EcoStop button limits the water consumption to 10 l/ min
- maximum flow rate at 3 bar: 12 l/ min
- flow rate hand shower connection at 3 bar: 12 l/ min
- thermostat cartridge, ceramic valve 180°
- min. operating pressure: 1 bar
- max. operating pressure: 10 bar
- safety lock at 40° C
- temperature limitation adjustable
- with isolated water conduction
- non-return valve
- with silencer
- shelf made of safety glass
- in case of installation on existing G ¾ connections, adaptor # 02026000 must be used
- surface of the shelf at color variant -000 = mirror glass, at color variant -400 = white glass
- connection type: s-shaped connections
- connection dimension: DN15
- dirt filter included

Consisting of:
- S-Union Set (# 95772000)

Optional parts:

· S-connections adapter G ¾ for renovation	Chrome	02026000	30.10

Measurements within scale drawings are in mm.

Technical specifications and units of measure are subject to change.

	finish	code no.	Euro
Ecostat Select Shower thermostat for exposed installation renovation	Chrome	13111000	351.70
	White/Chrome	13111400	351.70



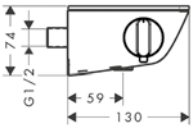

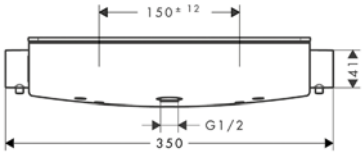

- 1 function
- volume control for 1 outlet
- centre distance: 150 ± 12 mm
- CoolContact thermostat: Prevents the housing from heating up, making showering even safer
- EcoStop button limits the water consumption to 10 l/ min
- maximum flow rate at 3 bar: 12 l/ min
- flow rate hand shower connection at 3 bar: 12 l/ min
- thermostat cartridge, ceramic valve 180°
- min. operating pressure: 1 bar
- max. operating pressure: 10 bar
- safety lock at 40° C
- temperature limitation adjustable
- with isolated water conduction
- non-return valve
- with silencer
- material handles: metal
- shelf made of safety glass
- surface of the shelf at color variant -000 = mirror glass, at color variant -400 = white glass
- for installation on existing G ½ connections
- connection type: s-shaped connections
- connection dimension: DN15
- dirt filter included

Consisting of:
- S-connections adapter G ¾ for renovation (# 02026000)
- S-Union Set (# 95772000)

Raindance Select E Shower system for exposed installation 120 with Ecostat Select thermostat and shower bar 90 cm	Chrome	27039000	475.70
	White/Chrome	27039400	475.70



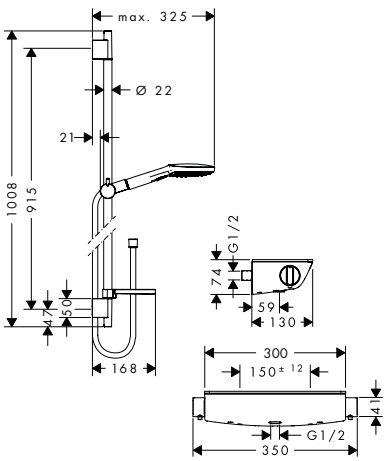

- consists of: hand shower, shower thermostat, shower bar, slider, soap dish, shower hose
- spray type overhead shower: Rain, RainAir, Whirl
- convenient diversion via Select button
- pivot connector prevent hose from tangling
- 90° position adjustable slider, pivots left and right, up and down
- CoolContact thermostat: Prevents the housing from heating up, making showering even safer
- maximum flow rate at 3 bar: 15 l/ min
- in case of installation on existing G ¾ connections, adaptor # 02026000 must be used

Consisting of:
- **Ecostat Select** Shower thermostat for exposed installation (# 13161XXX)
- **Raindance Select E** Shower set 120 3jet with shower bar 90 cm and soap dish (# 26621XXX)

Alternative sizes:

Raindance Select E Shower system for exposed installation 120 with Ecostat Select thermostat and shower bar 65 cm	Chrome	27038000	468.40
	White/Chrome	27038400	468.40

Optional parts:

S-connections adapter G ¾ for renovation	Chrome	02026000	30.10

Measurements within scale drawings are in mm.

Technical specifications and units of measure are subject to change.

	finish	code no.	Euro



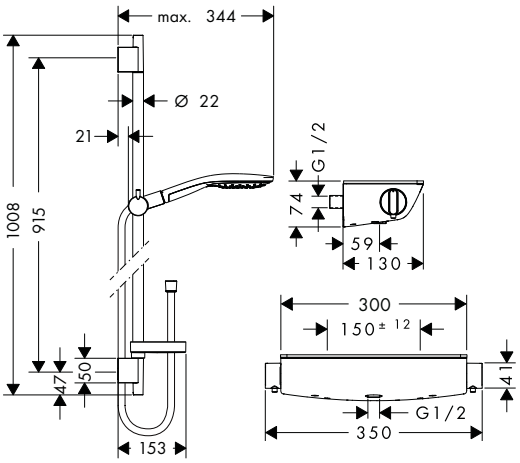

Raindance Select S Shower system for exposed installation 150 with Ecostat Select thermostat and shower bar 90 cm

finish	code no.	Euro
Chrome	27037000	522.50
White/Chrome	27037400	522.50

Cool Contact · Select · Air Power · Quick Clean · XXL Performance

- consists of: hand shower, shower thermostat, shower bar, slider, soap dish, shower hose
- spray type overhead shower: RainAir, CaresseAir, Mix
- convenient diversion via Select button
- pivot connector prevent hose from tangling
- 90° position adjustable slider, pivots left and right, up and down
- CoolContact thermostat: Prevents the housing from heating up, making showering even safer
- maximum flow rate at 3 bar: 16 l/ min
- in case of installation on existing G ¾ connections, adaptor # 02026000 must be used

Consisting of:
- **Ecostat Select** Shower thermostat for exposed installation (# 13161XXX)
- **Raindance Select S** Shower set 150 3jet with shower bar 90 cm and soap dish (# 27803XXX)

Alternative sizes:

Raindance Select S Shower system for exposed installation 150 with Ecostat Select thermostat and shower bar 65 cm	Chrome	27036000	515.10
	White/Chrome	27036400	515.10

Optional parts:

S-connections adapter G ¾ for renovation	Chrome	02026000	30.10



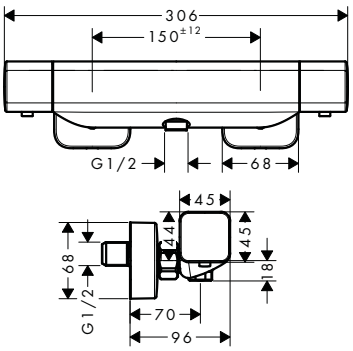

Ecostat E Shower thermostat for exposed installation

finish	code no.	Euro
Chrome	15773000	270.00

Cool Contact

- 1 function
- centre distance: 150 ± 12 mm
- CoolContact thermostat: Prevents the housing from heating up, making showering even safer
- EcoStop button limits the water consumption to 9 l/ min
- maximum flow rate at 3 bar: 28.6 l/ min
- thermostat cartridge
- min. operating pressure: 1 bar
- max. operating pressure: 10 bar
- safety lock at 40° C
- temperature limitation adjustable
- non-return valve
- with silencer
- suitable for continous flow water heaters
- material handles: metal
- connection type: s-shaped connections
- connection dimension: G ½
- dirt filter included

Measurements within scale drawings are in mm.

Technical specifications and units of measure are subject to change.

	finish	code no.	Euro



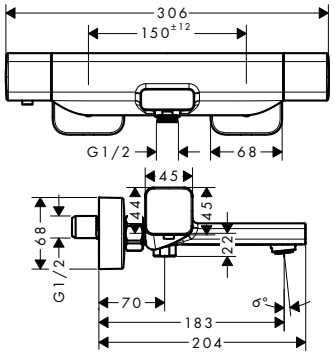

Ecostat E Bath thermostat for exposed installation

- 2 functions
- centre distance: 150 ± 12 mm
- CoolContact thermostat: Prevents the housing from heating up, making showering even safer
- EcoStop button limits the water consumption to 9 l/ min
- flow rate for bath spout at 3 bar: 18.6 l/ min
- flow rate of hand shower at 3 bar: 15.4 l/ min
- thermostat cartridge
- min. operating pressure: 1 bar
- max. operating pressure: 10 bar
- safety lock at 40° C
- temperature limitation adjustable
- non-return valve
- with silencer
- material handles: metal
- connection type: s-shaped connections
- connection dimension: G ½
- dirt filter included

Chrome	15774000	330.00

Cool Contact · Quick Clean



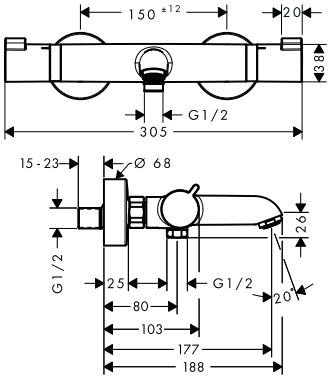

Ecostat Bath thermostat Comfort for exposed installation

- projection 177 mm
- 2 functions
- centre distance: 150 ± 12 mm
- spray type mixer: normal spray
- flow rate for bath spout at 3 bar: 20 l/ min
- flow rate of hand shower at 3 bar: 15 l/ min
- thermostat cartridge, shut-off/ diverter valve
- min. operating pressure: 1 bar
- max. operating pressure: 10 bar
- safety lock at 40° C
- temperature limitation adjustable
- non-return valve
- with silencer
- material handles: metal
- connection type: s-shaped connections
- connection dimension: DN15
- dirt filter included

Chrome	13114000	299.00
Brushed Bronze	13114140	448.50
Brushed Black Chrome	13114340	448.50
Matt Black	13114670	418.60
Matt White	13114700	418.60
Polished Gold Optic	13114990	448.50

Air Power · Quick Clean



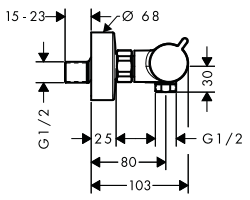

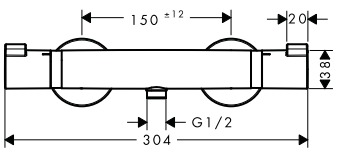

Ecostat Shower thermostat Comfort for exposed installation

- 1 function
- centre distance: 150 ± 12 mm
- EcoStop button limits the water consumption to 10 l/ min
- maximum flow rate at 3 bar: 17 l/ min
- flow rate hand shower connection at 3 bar: 17 l/ min
- thermostat cartridge, ceramic valve 180°
- min. operating pressure: 1 bar
- max. operating pressure: 10 bar
- safety lock at 40° C
- temperature limitation adjustable
- non-return valve
- with silencer
- material handles: metal
- connection type: s-shaped connections
- connection dimension: DN15
- dirt filter included

Chrome	13116000	234.10
Brushed Bronze	13116140	351.20
Brushed Black Chrome	13116340	351.20
Matt Black	13116670	327.70
Matt White	13116700	327.70
Polished Gold Optic	13116990	351.20

Measurements within scale drawings are in mm.

Technical specifications and units of measure are subject to change.

	finish	code no.	Euro



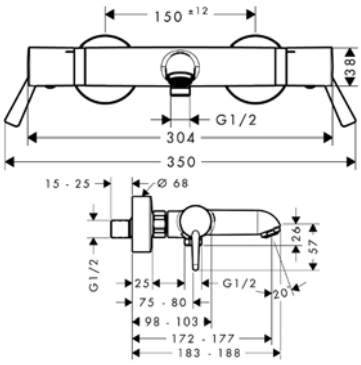

Ecostat Bath thermostat Comfort Care for exposed installation with extra long handles — Chrome — 13115000 — 322.60

Quick Clean

- larger print for greater clarity
- with extra long barrier-free handles
- projection 172 - 177 mm
- 2 functions
- centre distance: 150 ± 12 mm
- flow rate for bath spout at 3 bar: 23 l/ min
- flow rate of hand shower at 3 bar: 15 l/ min
- thermostat cartridge, shut-off/ diverter valve
- min. operating pressure: 1 bar
- max. operating pressure: 10 bar
- safety lock at 40° C
- temperature limitation adjustable
- non-return valve
- with silencer
- material handles: metal
- connection type: s-shaped connections
- connection dimension: DN15
- dirt filter included



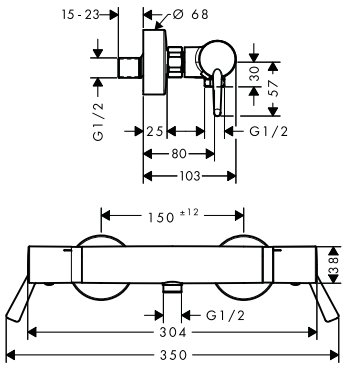

Ecostat Shower thermostat Comfort Care for exposed installation with extra long handles — Chrome — 13117000 — 257.60

- larger print for greater clarity
- with extra long barrier-free handles
- 1 function
- centre distance: 150 ± 12 mm
- flow rate hand shower connection at 3 bar: 17 l/ min
- thermostat cartridge, ceramic valve 180°
- min. operating pressure: 1 bar
- max. operating pressure: 10 bar
- safety lock at 40° C
- temperature limitation adjustable
- non-return valve
- with silencer
- material handles: metal
- connection type: s-shaped connections
- connection dimension: DN15
- dirt filter included

Measurements within scale drawings are in mm.

Technical specifications and units of measure are subject to change.

	finish	code no.	Euro



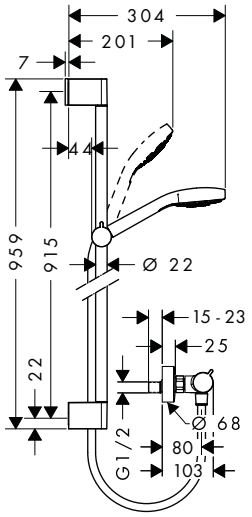

Croma Select E Shower system for exposed installation Vario with Ecostat Comfort thermostat and shower bar 90 cm

White/Chrome 27082400 275.90

Select · Eco Smart · Quick Clean · XXL Performance

- consists of: hand shower, shower thermostat, shower bar, slider, shower hose
- spray type overhead shower: Rain, TurboRain, IntenseRain
- convenient diversion via Select button
- pivot connector prevent hose from tangling
- slide inclination angle can be adjusted by 45°
- maximum flow rate at 3 bar: 15 l/min

Consisting of:

- **Croma Select E** Shower set Vario with shower bar 90 cm (# 26592400)
- **Ecostat** Shower thermostat Comfort for exposed installation (# 13116XXX)

Alternative sizes:

- **Croma Select E** Shower system for exposed installation Vario with Ecostat Comfort thermostat and shower bar 65 cm — White/Chrome 27081400 270.20



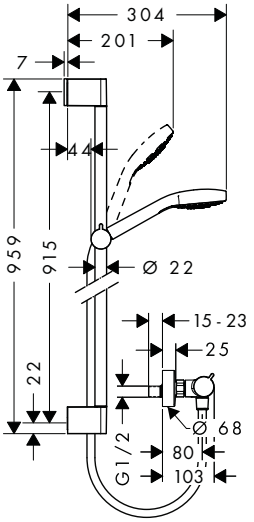

Croma Select S Shower system for exposed installation Vario with Ecostat Comfort thermostat and shower bar 90 cm

White/Chrome 27014400 275.90

Select · Quick Clean · XXL Performance

- consists of: hand shower, shower thermostat, shower bar, slider, shower hose
- spray type overhead shower: Rain, TurboRain, IntenseRain
- convenient diversion via Select button
- pivot connector prevent hose from tangling
- slide inclination angle can be adjusted by 45°
- maximum flow rate at 3 bar: 15 l/min

Consisting of:

- **Croma Select S** Shower set Vario with shower bar 90 cm (# 26572400)
- **Ecostat** Shower thermostat Comfort for exposed installation (# 13116XXX)

Alternative sizes:

- **Croma Select S** Shower system for exposed installation Vario with Ecostat Comfort thermostat and shower bar 65 cm — White/Chrome 27013400 270.20

Measurements within scale drawings are in mm.

Technical specifications and units of measure are subject to change.

	finish	code no.	Euro



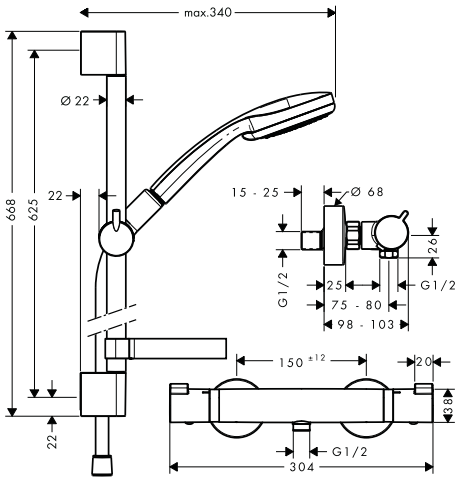

Croma 100 Shower system for exposed installation Multi with Ecostat Comfort thermostat and shower bar 90 cm

Chrome 27085000 334.50

Quick Clean

- consists of: hand shower, shower thermostat, shower bar, slider, soap dish, shower hose
- spray type overhead shower: Rain, MonoRain, Massage spray
- spray type adjustment by turning spray disc
- pivot connector prevent hose from tangling
- 90° position adjustable slider, pivots left and right, up and down
- maximum flow rate at 3 bar: 17 l/ min

Consisting of:
- **Croma 100** Shower set Multi with shower bar 90 cm and soap dish (# 27774000)
- **Ecostat** Shower thermostat Comfort for exposed installation (# 13116XXX)

Alternative sizes:
- **Croma 100** Shower system for exposed installation Multi with Ecostat Comfort thermostat and shower bar 65 cm — Chrome 27086000 312.00

Optional parts:
- Wall bar spacer — Chrome 97450000 8.10



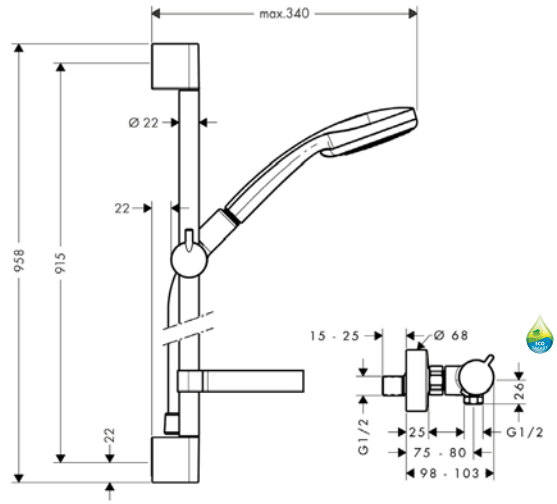

Croma 100 Shower system for exposed installation Vario with Ecostat Comfort thermostat and shower bar 90 cm

Chrome 27035000 312.40

Quick Clean XXL Performance

- consists of: hand shower, shower thermostat, shower bar, slider, soap dish, shower hose
- spray type overhead shower: normal spray, Rain, Massage spray, Shampoo spray
- spray type adjustment by turning spray disc
- pivot connector prevent hose from tangling
- 90° position adjustable slider, pivots left and right, up and down
- maximum flow rate at 3 bar: 18 l/ min

Consisting of:
- **Croma 100** Shower set Vario with shower bar 90 cm and soap dish (# 27771000)
- **Ecostat** Shower thermostat Comfort for exposed installation (# 13116XXX)

Alternative sizes:
- **Croma 100** Shower system for exposed installation Vario with Ecostat Comfort thermostat and shower bar 65 cm — Chrome 27034000 305.70

Water saving EcoSmart version:
- **Croma 100** Shower system for exposed installation Vario EcoSmart 9 l/ min with Ecostat Comfort thermostat and shower bar 90 cm — Chrome 27033000 317.80

Optional parts:
- Wall bar spacer — Chrome 97450000 8.10

Measurements within scale drawings are in mm.

Technical specifications and units of measure are subject to change.

	finish	code no.	Euro



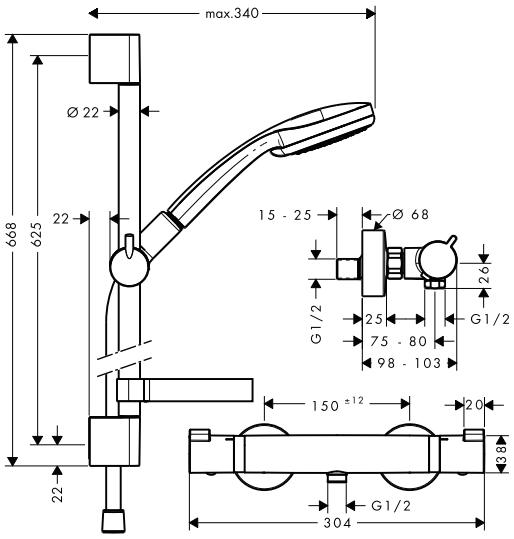

Croma 100 Shower system for exposed installation Vario with Ecostat Comfort thermostat and shower bar 65 cm

Chrome 27034000 305.70

Quick Clean · XXL Performance

- consists of: hand shower, shower thermostat, shower bar, slider, soap dish, shower hose
- spray type overhead shower: normal spray, Rain, Massage spray, Shampoo spray
- spray type adjustment by turning spray disc
- pivot connector prevent hose from tangling
- 90° position adjustable slider, pivots left and right, up and down
- maximum flow rate at 3 bar: 18 l/min

Consisting of:

- **Croma 100** Shower set Vario with shower bar 65 cm and soap dish (# 27772000)
- **Ecostat** Shower thermostat Comfort for exposed installation (# 13116XXX)

Water saving EcoSmart version:

- **Croma 100** Shower system for exposed installation Vario EcoSmart 9 l/min with Ecostat Comfort thermostat and shower bar 65 cm — Chrome 27032000 311.10



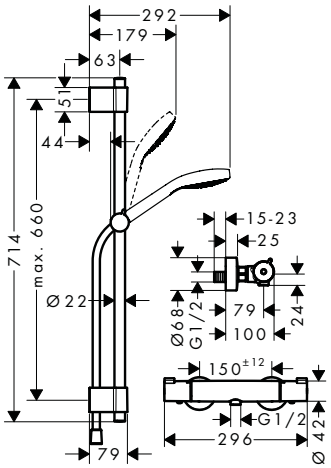

Croma Select S Shower system for exposed installation Vario with Ecostat 1001 CL thermostat and shower bar 72 cm

White/Chrome 27833400 232.20

Select · Quick Clean · XXL Performance

- consists of: hand shower, shower thermostat, shower bar, slider, shower hose
- spray type overhead shower: Rain, IntenseRain, TurboRain
- convenient diversion via Select button
- pivot connector prevent hose from tangling
- 90° position adjustable slider, pivots left and right, up and down
- maximum flow rate at 3 bar: 9 l/min
- variable drilling hole distance: 400 - 660 mm
- wall supports of plastic

Consisting of:

- **Ecostat** Shower thermostat 1001 CL for exposed installation (# 13211000)
- **Croma Select S** Hand shower Vario (# 26802400)
- **Unica** Shower bar Varia 72 cm (# 27355000)
- **Comfortflex** Shower hose 160 cm (# 28168000)

Measurements within scale drawings are in mm.

Technical specifications and units of measure are subject to change.

	finish	code no.	Euro



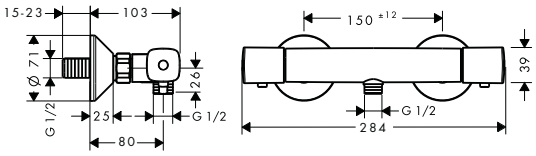

Ecostat Shower thermostat universal for exposed installation

Chrome | 13122000 | 210.20

- 1 function
- centre distance: 150 ± 12 mm
- EcoStop button limits the water consumption to 10 l/ min
- maximum flow rate at 3 bar: 17 l/ min
- flow rate hand shower connection at 3 bar: 17 l/ min
- thermostat cartridge, ceramic valve 180°
- min. operating pressure: 1 bar
- max. operating pressure: 10 bar
- safety lock at 40° C
- temperature limitation adjustable
- non-return valve
- with silencer
- connection type: s-shaped connections
- connection dimension: DN15
- dirt filter included



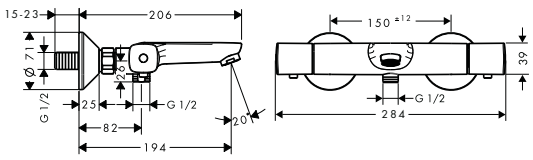

Ecostat Bath thermostat universal for exposed installation

Chrome | 13123000 | 268.60

Air Power | Quick Clean

- projection 194 mm
- 2 functions
- centre distance: 150 ± 12 mm
- flow rate for bath spout at 3 bar: 20 l/ min
- flow rate of hand shower at 3 bar: 16 l/ min
- thermostat cartridge, shut-off/ diverter valve
- min. operating pressure: 1 bar
- max. operating pressure: 10 bar
- safety lock at 40° C
- temperature limitation adjustable
- non-return valve
- with silencer
- connection type: s-shaped connections
- connection dimension: DN15
- dirt filter included

Measurements within scale drawings are in mm.

Technical specifications and units of measure are subject to change.

	finish	code no.	Euro



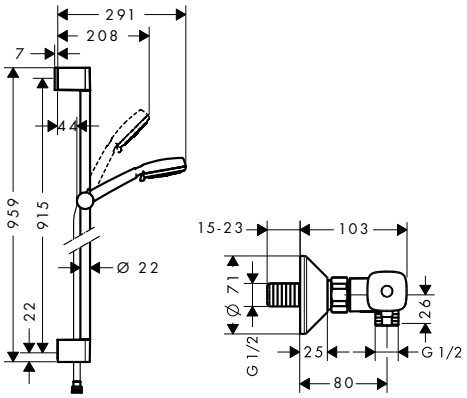

Crometta 100 Shower system for exposed installation Vario with Ecostat universal thermostat and shower bar 90 cm — White/Chrome — 27031400 — 232.70

Quick Clean · XXL Performance

- consists of: hand shower, shower thermostat, shower bar, slider, shower hose
- spray type overhead shower: Rain, normal spray, Shampoo spray, Massage spray
- spray type adjustment by turning spray disc
- pivot connector prevent hose from tangling
- 90° position adjustable slider, pivots left and right, up and down
- maximum flow rate at 3 bar: 16 l/ min

Consisting of:
- **Crometta 100** Shower set Vario with shower bar 90 cm (# 26657400)
- **Ecostat** Shower thermostat universal for exposed installation (# 13122000)

Alternative sizes:
- **Crometta 100** Shower system for exposed installation Vario with Ecostat universal thermostat and shower bar 65 cm — White/Chrome — 27030400 — 226.90

Optional parts:
- Wall bar spacer — Chrome — 97450000 — 8.10



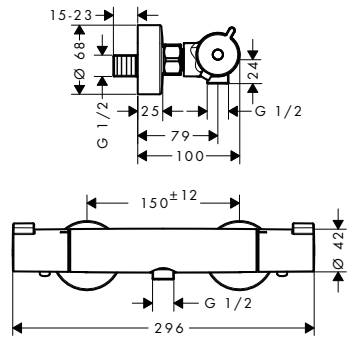

Ecostat Shower thermostat 1001 CL for exposed installation — Chrome — 13211000 — 164.20

- 1 function
- centre distance: 150 ± 12 mm
- EcoStop button limits the water consumption to 10 l/ min
- maximum flow rate at 3 bar: 17 l/ min
- flow rate hand shower connection at 3 bar: 17 l/ min
- thermostat cartridge, ceramic valve 180°
- min. operating pressure: 1 bar
- max. operating pressure: 10 bar
- safety lock at 40° C
- temperature limitation adjustable
- non-return valve
- with silencer
- material handles: metal
- connection type: s-shaped connections
- connection dimension: DN15
- dirt filter included

Measurements within scale drawings are in mm.

Technical specifications and units of measure are subject to change.

	finish	code no.	Euro



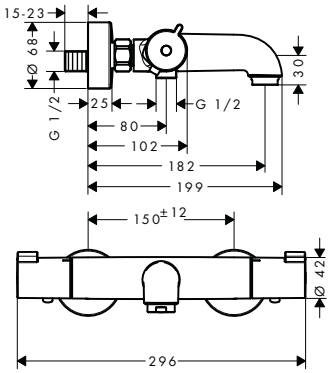

Ecostat Bath thermostat 1001 CL for exposed installation — Chrome — 13201000 — 208.30

Air Power

- projection 182 mm
- 2 functions
- centre distance: 150 ± 12 mm
- spray type mixer: normal spray
- flow rate for bath spout at 3 bar: 20 l/ min
- flow rate of hand shower at 3 bar: 17 l/ min
- thermostat cartridge, shut-off valve
- min. operating pressure: 1 bar
- max. operating pressure: 10 bar
- safety lock at 40° C
- temperature limitation adjustable
- non-return valve
- with silencer
- material handles: metal
- connection type: s-shaped connections
- connection dimension: DN15
- dirt filter included



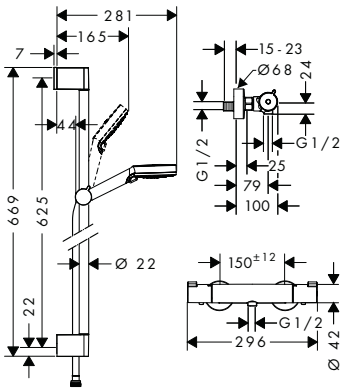

Crometta Shower system for exposed installation Vario with Ecostat 1001 CL thermostat and shower bar 65 cm — White/Chrome — 27812400 — 203.70

Quick Clean — XXL Performance

- consists of: hand shower, shower thermostat, shower bar, slider, shower hose
- spray type overhead shower: Rain, IntenseRain
- spray type adjustment by turning spray disc
- pivot connector prevent hose from tangling
- 90° position adjustable slider, pivots left and right, up and down
- maximum flow rate at 3 bar: 14 l/ min

Consisting of:

- **Crometta** Shower set Vario with shower bar 65 cm (# 26532400)
- **Ecostat** Shower thermostat 1001 CL for exposed installation (# 13211000)

Alternative sizes:

- **Crometta** Shower system for exposed installation Vario with Ecostat 1001 CL thermostat and shower bar 90 cm — White/Chrome — 27813400 — 212.60

Thermostatic mixer for exposed installation



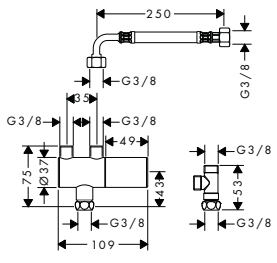

Ecostat Under-basin thermostat for exposed installation — Chrome — 15346000 — 259.20

- the thermostat offers the possibility for thermal disinfection
- connection dimension: G ⅜

Measurements within scale drawings are in mm.

Technical specifications and units of measure are subject to change.

RainSelect thermostatic mixers for concealed installation



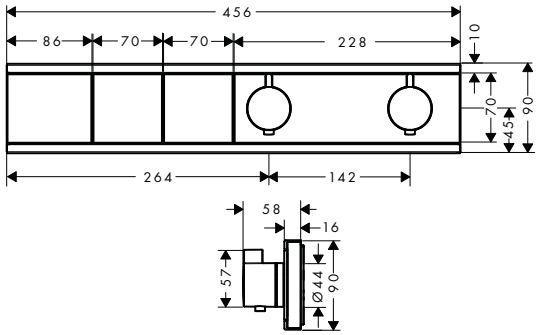

RainSelect Thermostat for concealed installation for 2 functions

- depending on volume flow and installation situation approx. 50% flow rate reduction and integrated shut off function
- 2 functions
- simultaneous use of several outlets
- Select push-button on/off control for 2 outlets
- maximum flow rate at 3 bar: 26 l/ min
- thermostat cartridge, Select valve
- min. operating pressure: 1 bar
- max. operating pressure: 10 bar
- safety lock at 40° C
- temperature limitation adjustable
- non-return valve
- connection type: basic set
- Thermostat is delivered with buttons handshower and PowderRain

Required parts:
- **RainSelect** Basic set for 2 functions

finish	code no.	Euro
Chrome	15380000	1,078.90
Brushed Bronze*	15380140	1,618.40
Brushed Black Chrome*	15380340	1,618.40
Matt Black*	15380670	1,402.50
Matt White	15380700	1,402.50
Polished Gold Optic*	15380990	1,618.40
	15310180	600.00

Select

*** available from January 2021**



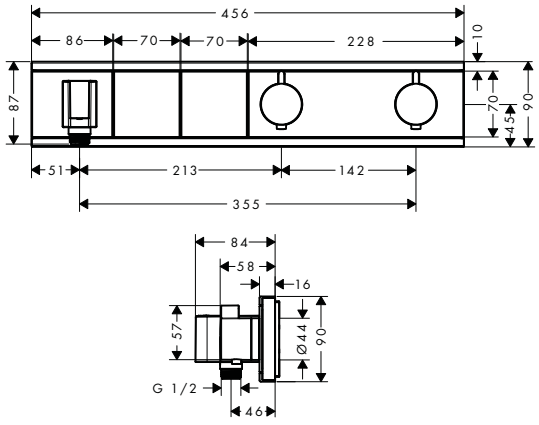

RainSelect Thermostat for concealed installation for 2 functions with integrated shower holder

- consists of: Thermostat, shower holder
- depending on volume flow and installation situation approx. 50% flow rate reduction and integrated shut off function
- 2 functions
- simultaneous use of several outlets
- Select push-button on/off control for 2 outlets
- maximum flow rate at 3 bar: 26 l/ min
- thermostat cartridge, Select valve
- min. operating pressure: 1 bar
- max. operating pressure: 10 bar
- safety lock at 40° C
- temperature limitation adjustable
- non-return valve
- hose nut: for shower hoses with conical or cylindrical nut on both sides
- connection type: basic set
- Thermostat is delivered with buttons Rain large and hand shower

Required parts:
- **RainSelect** Basic set for 2 functions

Chrome	15355000	1,174.20
White/Chrome	15355400	1,174.20
Black/Chrome	15355600	1,174.20
	15310180	600.00

Select



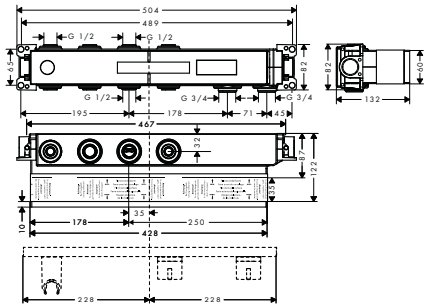

RainSelect Basic set for 2 functions

15310180 600.00

- 2 functions
- connection thread
- Rp ¾
- installation depth: 87 - 122 mm
- horizontal installation
- sound-decoupled installation
- connection dimension: DN15/DN20

Measurements within scale drawings are in mm.

Technical specifications and units of measure are subject to change.

	finish	code no.	Euro



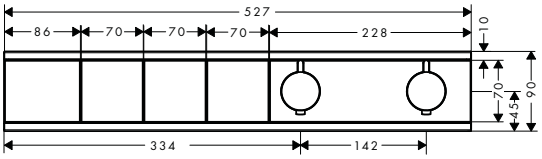

RainSelect Thermostat for concealed installation for 3 functions

- depending on volume flow and installation situation approx. 50% flow rate reduction and integrated shut off function
- 3 functions
- simultaneous use of several outlets
- Select push-button on/off control for 3 outlets
- thermostat cartridge, Select valve
- min. operating pressure: 1 bar
- max. operating pressure: 10 bar
- safety lock at 40° C
- temperature limitation adjustable
- non-return valve
- connection type: basic set
- Thermostat is delivered with buttons handshower, PowderRain, shoulder shower

Chrome	15381000	1,281.50
Matt White	15381700	1,665.90

Required parts:

- **RainSelect** Basic set for 3 functions — 15311180 — 700.00



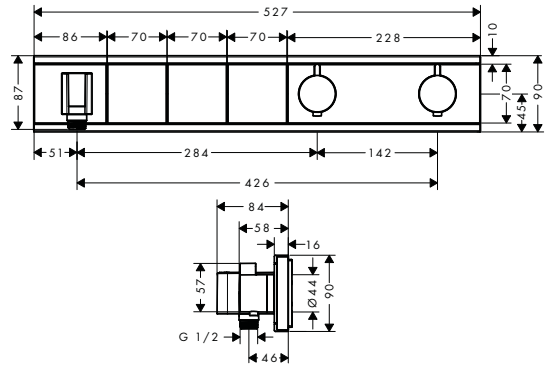

RainSelect Thermostat for concealed installation for 3 functions with integrated shower holder

- consists of: Thermostat, shower holder
- depending on volume flow and installation situation approx. 50% flow rate reduction and integrated shut off function
- 3 functions
- simultaneous use of several outlets
- Select push-button on/off control for 3 outlets
- maximum flow rate at 3 bar: 26 l/ min
- thermostat cartridge, Select valve
- min. operating pressure: 1 bar
- max. operating pressure: 10 bar
- safety lock at 40° C
- temperature limitation adjustable
- non-return valve
- hose nut: for shower hoses with conical or cylindrical nut on both sides
- connection type: basic set
- Thermostat is delivered with buttons hand shower, Waterfall, Rain large

Chrome	15356000	1,387.60
White/Chrome	15356400	1,387.60
Black/Chrome	15356600	1,387.60

Required parts:

- **RainSelect** Basic set for 3 functions — 15311180 — 700.00



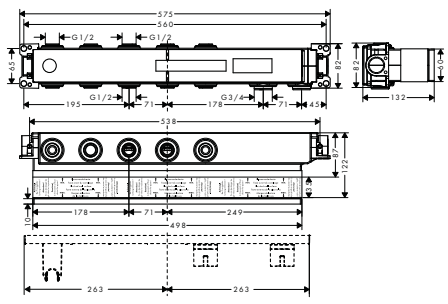

RainSelect Basic set for 3 functions

15311180 — 700.00

- 3 functions
- connection thread
- Rp ¾
- installation depth: 87 - 122 mm
- horizontal installation
- sound-decoupled installation
- connection dimension: DN15/DN20

Measurements within scale drawings are in mm.

	finish	code no.	Euro
RainSelect Thermostat for concealed installation for 4 functions	Chrome	15382000	1,484.10
	Brushed Bronze*	15382140	2,226.20
	Brushed Black Chrome*	15382340	2,226.20
	Matt Black*	15382670	1,929.30
	Matt White	15382700	1,929.30
	Polished Gold Optic*	15382990	2,226.20



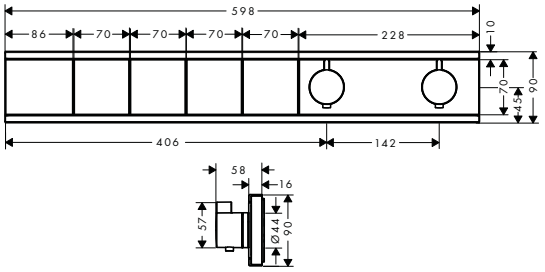

- depending on volume flow and installation situation approx. 50% flow rate reduction and integrated shut off function
- 4 functions
- simultaneous use of several outlets
- Select push-button on/off control for 4 outlets
- thermostat cartridge, Select valve
- min. operating pressure: 1 bar
- max. operating pressure: 10 bar
- safety lock at 40° C
- temperature limitation adjustable
- non-return valve
- connection type: basic set
- Thermostat is delivered with buttons handshower, PowderRain, Waterfall, Rain large

Required parts:
- **RainSelect** Basic set for 4 functions — 15312180 — 800.00

*** available from January 2021**

RainSelect Thermostat for concealed installation for 4 functions with integrated shower holder	Chrome	15357000	1,601.10
	White/Chrome	15357400	1,601.10
	Black/Chrome	15357600	1,601.10



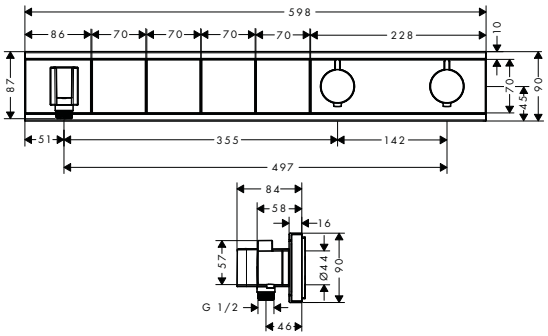

- consists of: Thermostat, shower holder
- depending on volume flow and installation situation approx. 50% flow rate reduction and integrated shut off function
- 4 functions
- simultaneous use of several outlets
- Select push-button on/off control for 4 outlets
- maximum flow rate at 3 bar: 26 l/min
- thermostat cartridge, Select valve
- min. operating pressure: 1 bar
- max. operating pressure: 10 bar
- safety lock at 40° C
- temperature limitation adjustable
- non-return valve
- hose nut: for shower hoses with conical or cylindrical nut on both sides
- connection type: basic set
- Thermostat is delivered with buttons hand shower, Waterfall, Rain large, Mono

Required parts:
- **RainSelect** Basic set for 4 functions — 15312180 — 800.00

RainSelect Basic set for 4 functions		15312180	800.00



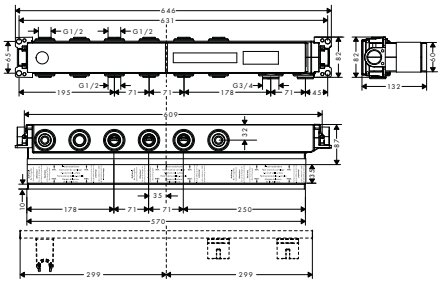

- 4 functions
- connection thread
- Rp ¾
- installation depth: 87 - 122 mm
- horizontal installation
- sound-decoupled installation
- connection dimension: DN15/DN20

Measurements within scale drawings are in mm.

Technical specifications and units of measure are subject to change.

	finish	code no.	Euro



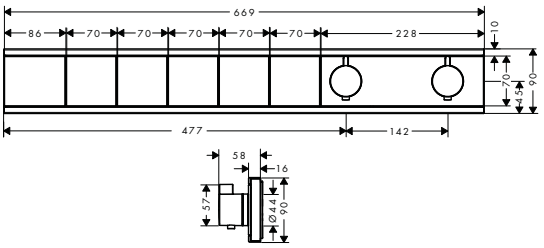

RainSelect Thermostat for concealed installation for 5 functions

Chrome	15384000	1,686.70
Matt White	15384700	2,192.60

Select

- depending on volume flow and installation situation approx. 50% flow rate reduction and integrated shut off function
- 5 functions
- simultaneous use of several outlets
- Select push-button on/off control for 5 outlets
- thermostat cartridge, Select valve
- min. operating pressure: 1 bar
- max. operating pressure: 10 bar
- safety lock at 40° C
- temperature limitation adjustable
- non-return valve
- connection type: basic set
- Thermostat is delivered with buttons handshower, PowderRain, Waterfall, Rain large, shoulder shower

Required parts:

· **RainSelect** Basic set for 5 functions	15313180	900.00



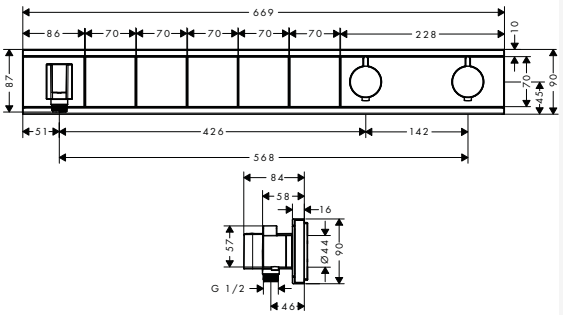

RainSelect Thermostat for concealed installation for 5 functions with integrated shower holder

Chrome	15358000	1,814.60
White/Chrome	15358400	1,814.60
Black/Chrome	15358600	1,814.60

Select

- consists of: Thermostat, shower holder
- depending on volume flow and installation situation approx. 50% flow rate reduction and integrated shut off function
- 5 functions
- simultaneous use of several outlets
- Select push-button on/off control for 5 outlets
- maximum flow rate at 3 bar: 26 l/ min
- thermostat cartridge, Select valve
- min. operating pressure: 1 bar
- max. operating pressure: 10 bar
- safety lock at 40° C
- temperature limitation adjustable
- non-return valve
- hose nut: for shower hoses with conical or cylindrical nut on both sides
- connection type: basic set
- Thermostat is delivered with buttons hand shower, Waterfall, Rain large, Mono, body shower

Required parts:

· **RainSelect** Basic set for 5 functions	15313180	900.00



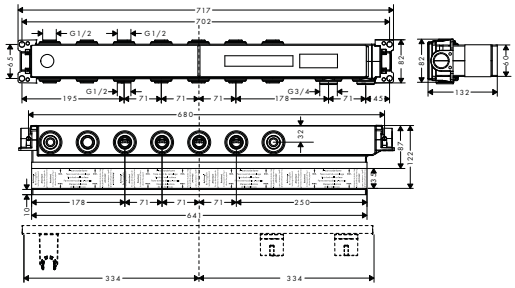

RainSelect Basic set for 5 functions

	15313180	900.00

- 5 functions
- connection thread
- Rp ¾
- installation depth: 87 - 122 mm
- horizontal installation
- sound-decoupled installation
- connection dimension: DN15/DN20

Measurements within scale drawings are in mm.

Technical specifications and units of measure are subject to change.

	finish	code no.	Euro



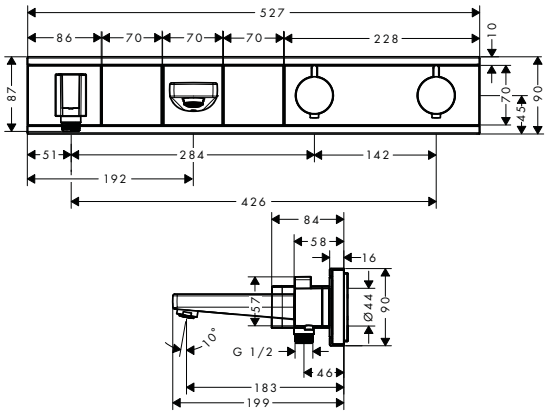

RainSelect Thermostat for concealed installation for 2 functions bath tub

Chrome	15359000	1,387.60
White/Chrome	15359400	1,387.60
Black/Chrome	15359600	1,387.60

Select

- consists of: Thermostat, shower holder
- depending on volume flow and installation situation approx. 50% flow rate reduction and integrated shut off function
- 2 functions
- simultaneous use of several outlets
- Select push-button on/off control for 2 outlets
- thermostat cartridge, Select valve
- min. operating pressure: 1 bar
- max. operating pressure: 10 bar
- safety lock at 40° C
- temperature limitation adjustable
- non-return valve
- hose nut: for shower hoses with conical or cylindrical nut on both sides
- connection type: basic set
- Thermostat is delivered with buttons hand shower and bath tub

Required parts:

· **RainSelect** Basic set for 2 functions bath tub	15314180	800.00



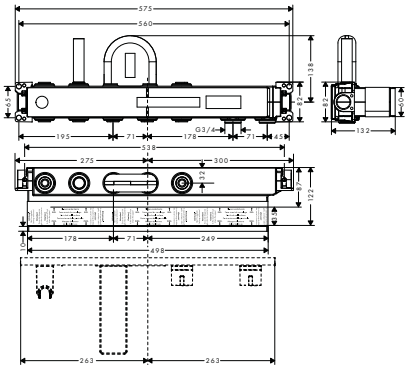

RainSelect Basic set for 2 functions bath tub

	15314180	800.00

- suitable for all shower, bath tub and thermostat finish sets for concealed installation
- connection thread
- Rp ¾
- installation depth: 87 - 122 mm
- sound-decoupled installation
- connection dimension: DN15/DN20

ShowerSelect glass thermostatic mixers for concealed installation



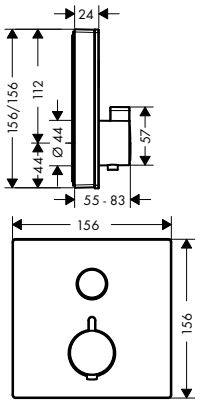

ShowerSelect Glass Thermostat for concealed installation for 1 function

White/Chrome	15737400	663.80
Black/Chrome	15737600	663.80

Select

- 1 function
- Select push-button on/off control for 1 outlet
- flow rate hand shower connection at 3 bar: 26 l/ min
- thermostat cartridge, Select valve
- min. operating pressure: 1 bar
- max. operating pressure: 10 bar
- safety lock at 40° C
- temperature limitation adjustable
- connection type: basic set
- Thermostat is delivered with button On/ Off

Required parts:

· Basic set iBox universal	01800180	130.80

Optional parts:

· Extension iBox universal basic set 2.5 cm		13595000	47.10
· **ShowerSelect Glass** Extension element	Chrome	13604000	93.60

Measurements within scale drawings are in mm.

Technical specifications and units of measure are subject to change.

	finish	code no.	Euro
ShowerSelect Glass Thermostat for concealed installation for 2 functions	White/Chrome	15738400	726.10
	Black/Chrome	15738600	726.10



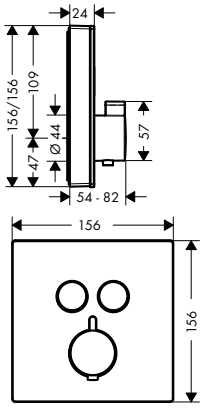

- 2 functions
- simultaneous use of several outlets
- Select push-button on/off control for 2 outlets
- flow rate upper outlet: 25 l/ min
- flow rate lower outlet: 23 l/ min
- thermostat cartridge, Select valve
- min. operating pressure: 1 bar
- max. operating pressure: 10 bar
- safety lock at 40° C
- temperature limitation adjustable
- connection type: basic set
- Thermostat is delivered with buttons hand shower and Rain large

Required parts:

· Basic set iBox universal		01800180	130.80

Optional parts:

· Extension iBox universal basic set 2.5 cm		13595000	47.10
· **ShowerSelect Glass** Extension element	Chrome	13604000	93.60

ShowerSelect Glass Thermostat HighFlow for concealed installation	White/Chrome	15734400	482.30
	Black/Chrome	15734600	482.30



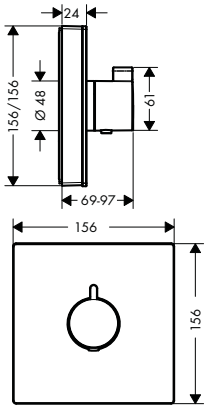

- maximum flow rate at 3 bar: 42 l/ min
- flow rate upper outlet: 42 l/ min
- flow rate lower outlet: 42 l/ min
- thermostat cartridge
- safety lock at 40° C
- temperature limitation adjustable
- connection type: basic set
- dirt filter included

Required parts:

· Basic set iBox universal		01800180	130.80

Optional parts:

· **ShowerSelect Glass** Valve for concealed installation for 3 functions	White/Chrome	15736400	482.30
	Black/Chrome	15736600	482.30
· Extension iBox universal basic set 2.5 cm		13595000	47.10
· **ShowerSelect Glass** Extension element	Chrome	13604000	93.60

Measurements within scale drawings are in mm.

Technical specifications and units of measure are subject to change.

	finish	code no.	Euro
ShowerSelect Glass Thermostat HighFlow for concealed installation for 1 function and additional outlet	White/Chrome	15735400	663.80
	Black/Chrome	15735600	663.80
· 1 function and 1 additional outlet · Select push-button on/off control for 1 outlet · flow rate hand shower connection at 3 bar: 34 l/ min · flow rate upper outlet: 59 l/ min · thermostat cartridge, Select valve · min. operating pressure: 1 bar · max. operating pressure: 10 bar · safety lock at 40° C · temperature limitation adjustable · connection type: basic set · dirt filter included · Thermostat is delivered with button hand shower			
Required parts:			
· Basic set iBox universal		01800180	130.80
Optional parts:			
· **ShowerSelect Glass** Valve for concealed installation for 3 functions	White/Chrome	15736400	482.30
	Black/Chrome	15736600	482.30
· Extension iBox universal basic set 2.5 cm		13595000	47.10
· **ShowerSelect Glass** Extension element	Chrome	13604000	93.60



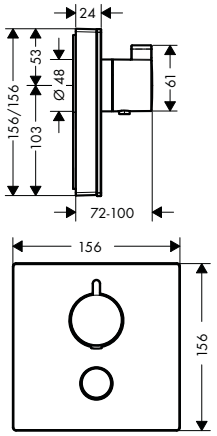

ShowerSelect Glass Valve for concealed installation for 3 functions	White/Chrome	15736400	482.30
	Black/Chrome	15736600	482.30
· 3 functions · simultaneous use of several outlets · Select valve · connection type: basic set · Thermostat is delivered with buttons Waterfall, Rain large, Mono			
Required parts:			
· Basic set iBox universal		01800180	130.80
Optional parts:			
· **ShowerSelect Glass** Thermostat HighFlow for concealed installation	White/Chrome	15734400	482.30
	Black/Chrome	15734600	482.30
· **ShowerSelect Glass** Thermostat HighFlow for concealed installation for 1 function and additional outlet	White/Chrome	15735400	663.80
	Black/Chrome	15735600	663.80
· Extension iBox universal basic set 2.5 cm		13595000	47.10
· **ShowerSelect Glass** Extension element	Chrome	13604000	93.60



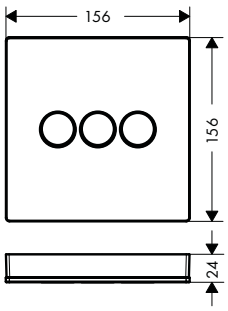

Optional parts - buttons - please order separately



Symbol ON/OFF	White	92579450	23.50
	Black	92579610	23.50



Symbol handshower	White	92573450	23.50
	Black	92573610	23.50

Measurements within scale drawings are in mm.

Technical specifications and units of measure are subject to change.

		finish	code no.	Euro
	Symbol showerhead Rain large	White Black	92571450 92571610	23.50 23.50
	Symbol showerhead Rain small	White Black	92572450 92572610	23.50 23.50
	Symbol Rain Flow	White Black	92574450 92574610	23.50 23.50
	Symbol Whirl	White Black	92575450 92575610	23.50 23.50
	Symbol Mono	White Black	92576450 92576610	23.50 23.50
	Symbol Tub	White Black	92577450 92577610	23.50 23.50
	Symbol Body spray	White Black	92578450 92578610	23.50 23.50
	Basic set iBox universal · suitable for all shower, bath tub and thermostat finish sets for concealed installation · connection thread · Rp ¾ · rotationally-symmetric installation · sound-decoupled installation · connection dimension: DN20 **Alternative products:** · Basic set iBox universal with shut-off unit **Optional parts:** · Extension iBox universal basic set 2.5 cm · Fastening rail set for iBox universal · Assembly aid for iBox universal		01800180 01850180 13595000 96615000 93500000	130.80 169.90 47.10 33.40 12.20
	**ShowerSelect Glass** Extension element · for installation between tiles and finish set · diameter: 157 mm · extension length: 22 mm	Chrome	13604000	93.60

Measurements within scale drawings are in mm.

Technical specifications and units of measure are subject to change.

ShowerSelect mixers for concealed installation

	finish	code no.	Euro
ShowerSelect Thermostat for concealed installation for 1 function	Chrome	15762000	536.90



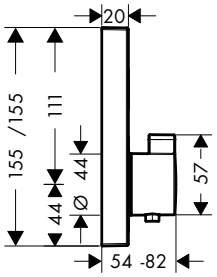

- 1 function
- Select push-button on/off control for 1 outlet
- flow rate hand shower connection at 3 bar: 26 l/ min
- thermostat cartridge, Select valve
- min. operating pressure: 1 bar
- max. operating pressure: 10 bar
- safety lock at 40° C
- temperature limitation adjustable
- connection type: basic set
- Thermostat is delivered with button On/ Off

Required parts:

· Basic set iBox universal		01800180	130.80

Optional parts:

· **ShowerSelect** Extension element	Chrome	13593000	43.70
· Extension iBox universal basic set 2.5 cm		13595000	47.10

ShowerSelect Thermostat for concealed installation for 2 functions	Chrome	15763000	584.70
	Brushed Bronze	15763140	877.10
	Brushed Black	15763340	877.10
	Chrome Matt Black	15763670	818.60
	Matt White	15763700	818.60
	Polished Gold Optic	15763990	877.10



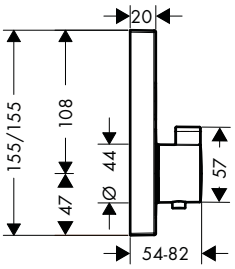

- 2 functions
- simultaneous use of several outlets
- Select push-button on/off control for 2 outlets
- flow rate upper outlet: 25 l/ min
- flow rate lower outlet: 23 l/ min
- thermostat cartridge, Select valve
- min. operating pressure: 1 bar
- max. operating pressure: 10 bar
- safety lock at 40° C
- temperature limitation adjustable
- connection type: basic set
- Thermostat is delivered with buttons hand shower and Rain large

Required parts:

· Basic set iBox universal		01800180	130.80

Optional parts:

· **ShowerSelect** Extension element	Chrome	13593000	43.70
· Extension iBox universal basic set 2.5 cm		13595000	47.10

Measurements within scale drawings are in mm.

Technical specifications and units of measure are subject to change.

	finish	code no.	Euro



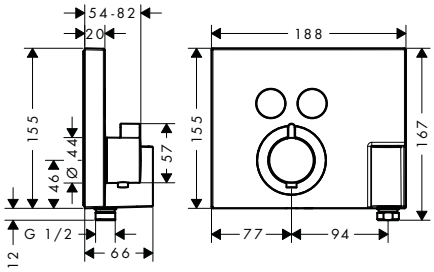

ShowerSelect Thermostat for concealed installation for 2 functions with hose connection and shower holder — Chrome — 15765000 — 716.00

- consists of: Thermostat, shower holder
- 2 functions
- simultaneous use of several outlets
- Select push-button on/off control for 2 outlets
- flow rate hand shower connection at 3 bar: 14 l/ min
- flow rate upper outlet: 29 l/ min
- thermostat cartridge, Select valve
- min. operating pressure: 1 bar
- max. operating pressure: 10 bar
- safety lock at 40° C
- temperature limitation adjustable
- hose nut: for shower hoses with conical nut on both sides
- connection type: basic set
- Thermostat is delivered with buttons hand shower and Rain large

Required parts:

- Basic set iBox universal — 01800180 — 130.80

Optional parts:

- Extension element ShowerSelect FixFit Porter — Chrome — 13601000 — 106.20



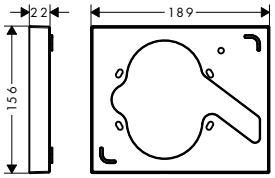

Extension element ShowerSelect FixFit Porter — Chrome — 13601000 — 106.20

- for installation between tiles and finish set
- extension length: 22 mm

Optional parts:

- **ShowerSelect** Thermostat for concealed installation for 2 functions with hose connection and shower holder — Chrome — 15765000 — 716.00



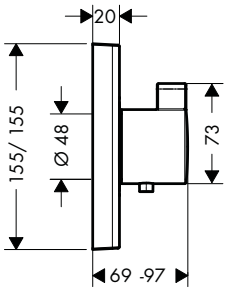

ShowerSelect Thermostat HighFlow for concealed installation — Chrome — 15760000 — 387.90

- maximum flow rate at 3 bar: 42 l/ min
- flow rate upper outlet: 42 l/ min
- flow rate lower outlet: 42 l/ min
- thermostat cartridge
- safety lock at 40° C
- temperature limitation adjustable
- connection type: basic set
- dirt filter included

Required parts:

- Basic set iBox universal — 01800180 — 130.80

Optional parts:

- **ShowerSelect** Valve for concealed installation for 3 functions — Chrome — 15764000 — 387.90
- **ShowerSelect** Extension element — Chrome — 13593000 — 43.70
- Extension iBox universal basic set 2.5 cm — 13595000 — 47.10

Measurements within scale drawings are in mm.

Technical specifications and units of measure are subject to change.

	finish	code no.	Euro
 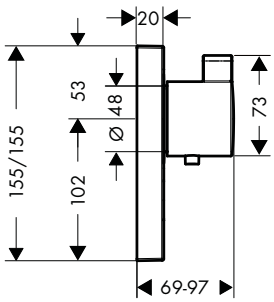			
ShowerSelect Thermostat HighFlow for concealed installation for 1 function and additional outlet · 1 function and 1 additional outlet · Select push-button on/off control for 1 outlet · flow rate hand shower connection at 3 bar: 34 l/ min · flow rate upper outlet: 59 l/ min · thermostat cartridge, Select valve · min. operating pressure: 1 bar · max. operating pressure: 10 bar · safety lock at 40° C · temperature limitation adjustable · connection type: basic set · dirt filter included · Thermostat is delivered with button hand shower	Chrome	15761000	536.90
Required parts: · Basic set iBox universal		01800180	130.80
Optional parts: · **ShowerSelect** Valve for concealed installation for 3 functions	Chrome	15764000	387.90
· **ShowerSelect** Extension element	Chrome	13593000	43.70
· Extension iBox universal basic set 2.5 cm		13595000	47.10
 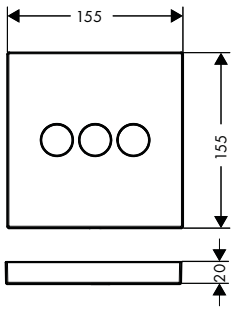			
ShowerSelect Valve for concealed installation for 3 functions · 3 functions · simultaneous use of several outlets · maximum flow rate at 3 bar: 30 l/ min · Select valve · connection type: basic set · Thermostat is delivered with buttons hand shower, Rain large, Waterfall	Chrome	15764000	387.90
Required parts: · Basic set iBox universal		01800180	130.80
Optional parts: · **ShowerSelect** Thermostat HighFlow for concealed installation	Chrome	15760000	387.90
· **ShowerSelect** Thermostat HighFlow for concealed installation for 1 function and additional outlet	Chrome	15761000	536.90
· **ShowerSelect** Extension element	Chrome	13593000	43.70
· Extension iBox universal basic set 2.5 cm		13595000	47.10

Measurements within scale drawings are in mm.

Technical specifications and units of measure are subject to change.

ShowerSelect mixers for concealed installation

	finish	code no.	Euro
ShowerSelect Mixer for concealed installation for 1 function	Chrome	15767000	447.50



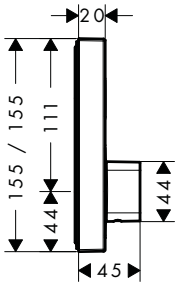

- 1 function
- connection type: basic set
- flow rate of hand shower at 3 bar: 21 l/min
- ceramic cartridge for temperature control, Select valve
- min. operating pressure: 1 bar
- max. operating pressure: 10 bar
- temperature limitation adjustable
- Thermostat is delivered with button On/ Off

Required parts:

· Basic set iBox universal		01800180	130.80

Optional parts:

· **ShowerSelect** Extension element	Chrome	13593000	43.70
· Extension iBox universal basic set 2.5 cm		13595000	47.10

ShowerSelect Mixer for concealed installation for 2 functions	Chrome	15768000	495.40



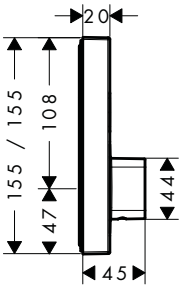

- 2 functions
- simultaneous use of several outlets
- connection type: basic set
- flow rate upper outlet: 20 l/min
- flow rate lower outlet: 20 l/min
- ceramic cartridge for temperature control, Select valve
- min. operating pressure: 1 bar
- max. operating pressure: 10 bar
- temperature limitation adjustable
- Thermostat is delivered with buttons hand shower and Rain large

Required parts:

· Basic set iBox universal		01800180	130.80

Optional parts:

· **ShowerSelect** Extension element	Chrome	13593000	43.70
· Extension iBox universal basic set 2.5 cm		13595000	47.10

Basic set iBox universal		01800180	130.80



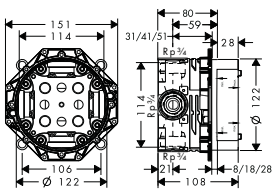

- suitable for all shower, bath tub and thermostat finish sets for concealed installation
- connection thread
- Rp ¾
- rotationally-symmetric installation
- sound-decoupled installation
- connection dimension: DN20

Alternative products:

· Basic set iBox universal with shut-off unit		01850180	169.90

Optional parts:

· Extension iBox universal basic set 2.5 cm		13595000	47.10
· Fastening rail set for iBox universal		96615000	33.40
· Assembly aid for iBox universal		93500000	12.20

Measurements within scale drawings are in mm.

Technical specifications and units of measure are subject to change.

ShowerSelect S thermostatic mixers for concealed installation



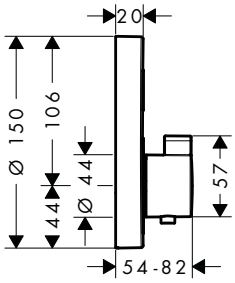

	finish	code no.	Euro
ShowerSelect S Thermostat for concealed installation for 1 function	Chrome	15744000	536.90
· 1 function · Select push-button on/off control for 1 outlet · thermostat cartridge, Select valve · min. operating pressure: 1 bar · max. operating pressure: 10 bar · safety lock at 40° C · temperature limitation adjustable · connection type: basic set · Thermostat is delivered with button On/ Off			
Required parts:			
· Basic set iBox universal		01800180	130.80
Optional parts:			
· Extension element 15 cm	Chrome	13597000	44.70
· Extension iBox universal basic set 2.5 cm		13595000	47.10



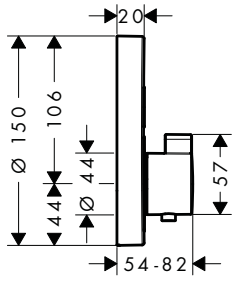

ShowerSelect S Thermostat for concealed installation for 2 functions	Chrome	15743000	584.70
	Brushed Bronze	15743140	877.10
	Brushed Black Chrome	15743340	877.10
	Matt Black	15743670	818.60
	Matt White	15743700	818.60
	Polished Gold Optic	15743990	877.10
· 2 functions · simultaneous use of several outlets · Select push-button on/off control for 2 outlets · flow rate upper outlet: 25 l/ min · flow rate lower outlet: 23 l/ min · thermostat cartridge, Select valve · min. operating pressure: 1 bar · max. operating pressure: 10 bar · safety lock at 40° C · temperature limitation adjustable · connection type: basic set · Thermostat is delivered with buttons hand shower and Rain large			
Required parts:			
· Basic set iBox universal		01800180	130.80
Optional parts:			
· Extension element 15 cm	Chrome	13597000	44.70
· Extension iBox universal basic set 2.5 cm		13595000	47.10



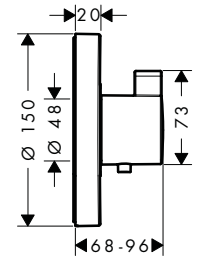

ShowerSelect S Thermostat HighFlow for concealed installation	Chrome	15741000	387.90
· maximum flow rate at 3 bar: 42 l/ min · flow rate upper outlet: 42 l/ min · flow rate lower outlet: 42 l/ min · thermostat cartridge · safety lock at 40° C · temperature limitation adjustable · connection type: basic set · dirt filter included			
Required parts:			
· Basic set iBox universal		01800180	130.80
Optional parts:			
· **ShowerSelect S** Valve for concealed installation for 3 functions	Chrome	15745000	387.90
· Extension element 15 cm	Chrome	13597000	44.70
· Extension iBox universal basic set 2.5 cm		13595000	47.10

Measurements within scale drawings are in mm.

Technical specifications and units of measure are subject to change.

	finish	code no.	Euro



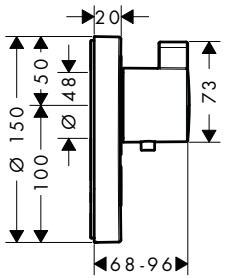

ShowerSelect S Thermostat HighFlow for concealed installation for 1 function and additional outlet

	Chrome	15742000	536.90

- 1 function and 1 additional outlet
- flow rate hand shower connection at 3 bar: 34 l/ min
- flow rate upper outlet: 59 l/ min
- thermostat cartridge
- min. operating pressure: 1 bar
- max. operating pressure: 10 bar
- safety lock at 40° C
- temperature limitation adjustable
- connection type: basic set
- Thermostat is delivered with button hand shower

Required parts:

· Basic set iBox universal		01800180	130.80

Optional parts:

· **ShowerSelect S** Valve for concealed installation for 3 functions	Chrome	15745000	387.90
· Extension element 15 cm	Chrome	13597000	44.70
· Extension iBox universal basic set 2.5 cm		13595000	47.10



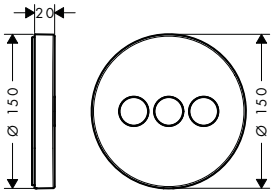

ShowerSelect S Valve for concealed installation for 3 functions

	Chrome	15745000	387.90

- 3 functions
- simultaneous use of several outlets
- Select valve
- min. operating pressure: 1 bar
- max. operating pressure: 10 bar
- connection type: basic set
- Thermostat is delivered with buttons Rain large, Whirl, Waterfall

Required parts:

· Basic set iBox universal		01800180	130.80

Optional parts:

· **ShowerSelect S** Thermostat HighFlow for concealed installation	Chrome	15741000	387.90
· **ShowerSelect S** Thermostat HighFlow for concealed installation for 1 function and additional outlet	Chrome	15742000	536.90
· Extension element 15 cm	Chrome	13597000	44.70
· Extension iBox universal basic set 2.5 cm		13595000	47.10

Measurements within scale drawings are in mm.

Technical specifications and units of measure are subject to change.

ShowerSelect S mixers for concealed installation

	finish	code no.	Euro
 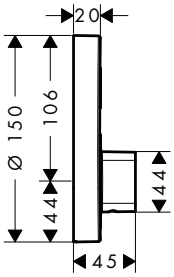 **ShowerSelect S** Mixer for concealed installation for 1 function · 1 function · connection type: basic set · flow rate of hand shower at 3 bar: 21 l/ min · ceramic cartridge for temperature control, Select valve · min. operating pressure: 1 bar · max. operating pressure: 10 bar · temperature limitation adjustable · Thermostat is delivered with button On/ Off	Chrome	15747000	447.50
Required parts:			
· Basic set iBox universal		01800180	130.80
Optional parts:			
· Extension element 15 cm	Chrome	13597000	44.70
· Extension iBox universal basic set 2.5 cm		13595000	47.10
 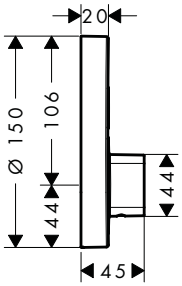 **ShowerSelect S** Mixer for concealed installation for 2 functions · 2 functions · simultaneous use of several outlets · connection type: basic set · flow rate upper outlet: 20 l/ min · flow rate lower outlet: 20 l/ min · ceramic cartridge for temperature control, Select valve · min. operating pressure: 1 bar · max. operating pressure: 10 bar · temperature limitation adjustable · Thermostat is delivered with buttons hand shower and Rain large	Chrome	15748000	495.40
Required parts:			
· Basic set iBox universal		01800180	130.80
Optional parts:			
· Extension element 15 cm	Chrome	13597000	44.70
· Extension iBox universal basic set 2.5 cm		13595000	47.10

Optional parts - buttons - please order separately

 Symbol ON/OFF	Matt Black	93579670	9.30
	Matt White	93579700	9.30
	Satin Chrome	93579880	6.20
 Symbol hand shower	Matt Black	93573670	9.30
	Matt White	93573700	9.30
	Satin Chrome	93573880	6.20
 Symbol overhead shower Rain large	Matt Black	93571670	9.30
	Matt White	93571700	9.30
	Satin Chrome	93571880	6.20

Measurements within scale drawings are in mm.

Technical specifications and units of measure are subject to change.

		finish	code no.	Euro
	Symbol overhead shower Rain small	Matt Black Matt White Satin Chrome	93572670 93572700 93572880	9.30 9.30 6.20
	Symbol Rain Flow	Matt Black Matt White Satin Chrome	93574670 93574700 93574880	9.30 9.30 6.20
	Symbol Whirl	Matt Black Matt White Satin Chrome	93575670 93575700 93575880	9.30 9.30 6.20
	Symbol Mono	Matt Black Matt White Satin Chrome	93576670 93576700 93576880	9.30 9.30 6.20
	Symbol tub	Matt Black Matt White Satin Chrome	93577670 93577700 93577880	9.30 9.30 6.20
	Symbol body spray	Matt Black Matt White Satin Chrome	93578670 93578700 93578880	9.30 9.30 6.20
	Basic set iBox universal · suitable for all shower, bath tub and thermostat finish sets for concealed installation · connection thread · Rp ¾ · rotationally-symmetric installation · sound-decoupled installation · connection dimension: DN20		01800180	130.80
	Alternative products: · Basic set iBox universal with shut-off unit		01850180	169.90
	Optional parts: · Extension iBox universal basic set 2.5 cm · Fastening rail set for iBox universal · Assembly aid for iBox universal		13595000 96615000 93500000	47.10 33.40 12.20

Measurements within scale drawings are in mm.

Technical specifications and units of measure are subject to change.

Ecostat Square thermostatic mixers and valves for concealed installation



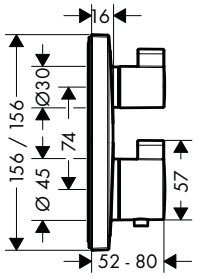

	finish	code no.	Euro
Ecostat Square Thermostat for concealed installation for 1 function · 1 function · maximum flow rate at 3 bar: 26 l/ min · thermostat cartridge · min. operating pressure: 1 bar · max. operating pressure: 10 bar · safety lock at 40° C · temperature limitation adjustable · volume control · connection type: basic set	Chrome	15712000	378.10
Required parts:			
· Basic set iBox universal		01800180	130.80
Optional parts:			
· **ShowerSelect** Extension element	Chrome	13593000	43.70
· Extension iBox universal basic set 2.5 cm		13595000	47.10



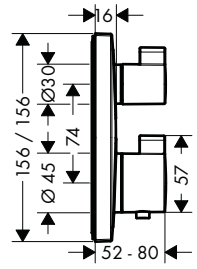

Ecostat Square Thermostat for concealed installation for 2 functions · 2 functions · maximum flow rate at 3 bar: 26 l/ min · thermostat cartridge, shut-off/ diverter valve · min. operating pressure: 1 bar · max. operating pressure: 10 bar · safety lock at 40° C · temperature limitation adjustable · connection type: basic set	Chrome	15714000	424.40
	Brushed Bronze	15714140	636.60
	Brushed Black Chrome	15714340	636.60
	Matt Black	15714670	594.20
	Matt White	15714700	594.20
	Polished Gold Optic	15714990	636.60
Required parts:			
· Basic set iBox universal		01800180	130.80
Optional parts:			
· **ShowerSelect** Extension element	Chrome	13593000	43.70
· Extension iBox universal basic set 2.5 cm		13595000	47.10

Ecostat E thermostatic mixers and valves for concealed installation



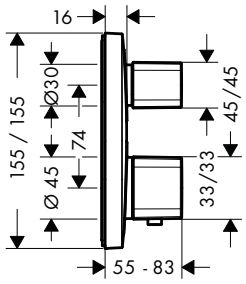

Ecostat E Thermostat for concealed installation for 1 function · 1 function · flow rate at 3 bar: 26 l/ min · thermostat cartridge · safety lock at 40° C · temperature limitation adjustable · volume control · connection type: basic set	Chrome	15707000	378.10
Required parts:			
· Basic set iBox universal		01800180	130.80
Optional parts:			
· **PuraVida** Extension element	Chrome	15597000	43.60
· Extension iBox universal basic set 2.5 cm		13595000	47.10

Measurements within scale drawings are in mm.

Technical specifications and units of measure are subject to change.

	finish	code no.	Euro
 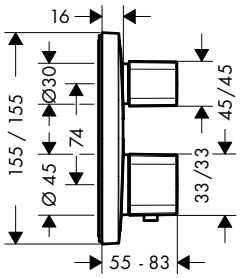			
Ecostat E Thermostat for concealed installation for 2 functions · 2 functions · maximum flow rate at 3 bar: 26 l/ min · flow rate at 3 bar: 26 l/ min · thermostat cartridge, shut-off/ diverter valve · safety lock at 40° C · temperature limitation adjustable · connection type: basic set	Chrome	15708000	424.40
Required parts:			
· Basic set iBox universal		01800180	130.80
Optional parts:			
· **PuraVida** Extension element	Chrome	15597000	43.60
· Extension iBox universal basic set 2.5 cm		13595000	47.10
 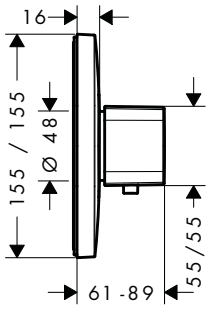			
Ecostat E Thermostat HighFlow for concealed installation · maximum flow rate at 3 bar: 59 l/ min · flow rate at 3 bar: 59 l/ min · thermostat cartridge · safety lock at 40° C · temperature limitation adjustable · connection type: basic set	Chrome	15706000	378.10
Required parts:			
· Basic set iBox universal		01800180	130.80
Optional parts:			
· **PuraVida** Shut-off/ diverter valve iControl for concealed installation for 3 functions	Chrome	15777000	424.20
· **PuraVida** Extension element	Chrome	15597000	43.60
· Extension iBox universal basic set 2.5 cm		13595000	47.10
 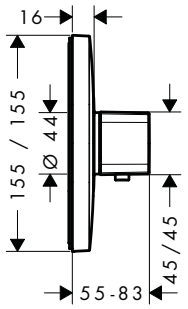			
Ecostat E Thermostat for concealed installation · flow rate at 3 bar: 37.9 l/ min · thermostat cartridge · safety lock at 40° C · temperature limitation adjustable · connection type: basic set	Chrome	15705000	232.70
Required parts:			
· Basic set iBox universal		01800180	130.80
Optional parts:			
· **PuraVida** Extension element	Chrome	15597000	43.60
· Extension iBox universal basic set 2.5 cm		13595000	47.10

Measurements within scale drawings are in mm.

Ecostat S thermostatic mixers and valves for concealed installation

	finish	code no.	Euro
 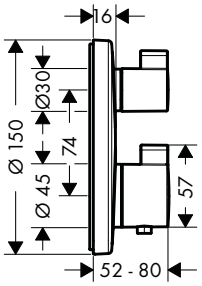 **Ecostat S** Thermostat for concealed installation for 1 function · 1 function · thermostat cartridge, ceramic valves 90° · safety lock at 40° C · temperature limitation adjustable · volume control · connection type: basic set	Chrome	15757000	378.10
Required parts:			
· Basic set iBox universal		01800180	130.80
Optional parts:			
· Extension element 15 cm	Chrome	13597000	44.70
· Extension iBox universal basic set 2.5 cm		13595000	47.10
 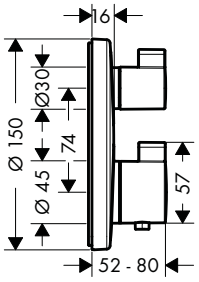 **Ecostat S** Thermostat for concealed installation for 2 functions · 2 functions · volume control and diverter for 2 outlets · thermostat cartridge, shut-off/ diverter valve · safety lock at 40° C · temperature limitation adjustable · connection type: basic set	Chrome Brushed Bronze Brushed Black Chrome Matt Black Matt White Polished Gold Optic	15758000 15758140 15758340 15758670 15758700 15758990	424.40 636.60 636.60 594.20 594.20 636.60
Required parts:			
· Basic set iBox universal		01800180	130.80
Optional parts:			
· Extension element 15 cm	Chrome	13597000	44.70
· Extension iBox universal basic set 2.5 cm		13595000	47.10
 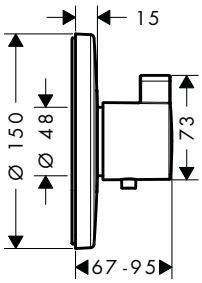 **Ecostat S** Thermostat HighFlow for concealed installation · maximum flow rate at 3 bar: 59 l/ min · flow rate at 3 bar: 59 l/ min · thermostat cartridge · safety lock at 40° C · temperature limitation adjustable · connection type: basic set	Chrome	15756000	378.10
Required parts:			
· Basic set iBox universal		01800180	130.80
Optional parts:			
· Extension element 15 cm	Chrome	13597000	44.70
· Extension iBox universal basic set 2.5 cm		13595000	47.10
 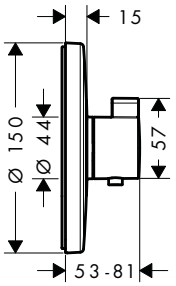 **Ecostat S** Thermostat for concealed installation · maximum flow rate at 3 bar: 37.9 l/ min · thermostat cartridge · safety lock at 40° C · temperature limitation adjustable · connection type: basic set	Chrome	15755000	232.70
Required parts:			
· Basic set iBox universal		01800180	130.80
Optional parts:			
· Extension element 15 cm	Chrome	13597000	44.70
· Extension iBox universal basic set 2.5 cm		13595000	47.10

Measurements within scale drawings are in mm.

Technical specifications and units of measure are subject to change.

	finish	code no.	Euro
Shut-off/ diverter valve S Trio/ Quattro for concealed installation	Chrome	15932000	122.80
Required parts:			
· Basic set for Trio shut-off/ diverter valve for concealed installation		15981180	159.00
· Basic set for Quattro four-way diverter valve for concealed installation		15930180	250.70



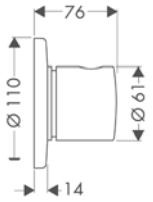

Shut-off valve S for concealed installation	Chrome	15972000	91.80
Required parts:			
· Basic set 52 l/ min for shut-off valve for concealed installation spindle		15973180	80.60
· Basic set 40 l/ min for shut-off valve for concealed installation ceramic		15974180	83.70
· Basic set 130 l/ min for shut-off valve for concealed installation spindle		15970180	87.50
Optional parts:			
· Extension set 2.5 cm		96370000	45.40



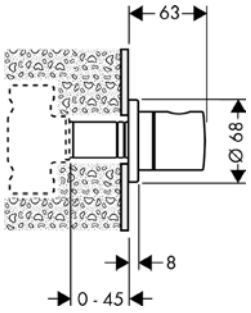

Extension element 15 cm	Chrome	13597000	44.70
· for installation between tiles and finish set			
· suitable for all shower and bath tub finish sets Ø 150 mm			
· diameter: 152 mm			
· extension length: 22 mm			



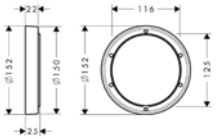

PuraVida thermostatic mixers and valves for concealed installation

PuraVida Thermostat for concealed installation with shut-off/ diverter valve	Chrome White/Chrome	15771000 15771400	1,178.70 1,178.70
· 2 functions			
· flow rate: 26 l/ min			
· thermostat cartridge			
· min. operating pressure: 1 bar			
· max. operating pressure: 10 bar			
· safety lock at 40° C			
· temperature limitation adjustable			
· volume control			
· connection type: basic set			
Required parts:			
· Basic set iBox universal		01800180	130.80
Optional parts:			
· **PuraVida** Extension element	Chrome	15597000	43.60



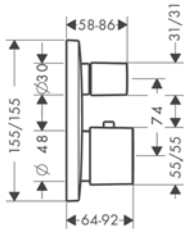

Measurements within scale drawings are in mm.

Technical specifications and units of measure are subject to change.

	finish	code no.	Euro
 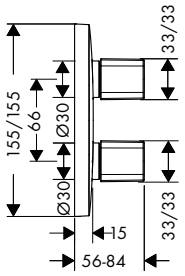			
PuraVida Shut-off/ diverter valve iControl for concealed installation for 3 functions · 3 functions · simultaneous utilization by 3 outlets · connection dimension: DN20	Chrome	15777000	424.20
Required parts:			
· Basic set iBox universal		01800180	130.80
Optional parts:			
· **PuraVida** Extension element	Chrome	15597000	43.60
· Extension iBox universal basic set 2.5 cm		13595000	47.10
· Flushing board iControl	Chrome	15956000	58.60
 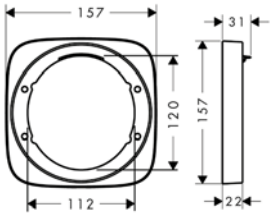			
PuraVida Extension element · for installation between tiles and finish set · diameter: 157 mm · extension length: 31 mm	Chrome	15597000	43.60
 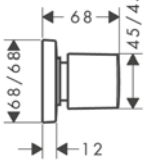			
PuraVida Shut-off valve for concealed installation · connection type: DN15/DN20	Chrome White/Chrome	15978000 15978400	144.40 144.40
Required parts:			
· Basic set 52 l/ min for shut-off valve for concealed installation spindle		15973180	80.60
· Basic set 40 l/ min for shut-off valve for concealed installation ceramic		15974180	83.70
· Basic set 130 l/ min for shut-off valve for concealed installation spindle		15970180	87.50
 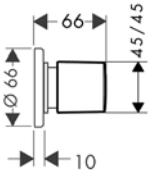			
Metris Shut-off valve E for concealed installation · connection type: DN15/DN20	Chrome	31677000	37.20
Required parts:			
· Basic set 52 l/ min for shut-off valve for concealed installation spindle		15973180	80.60
· Basic set 40 l/ min for shut-off valve for concealed installation ceramic		15974180	83.70
· Basic set 130 l/ min for shut-off valve for concealed installation spindle		15970180	87.50
· Extension set 2.5 cm		96370000	45.40

Measurements within scale drawings are in mm.

Technical specifications and units of measure are subject to change.

	finish	code no.	Euro
 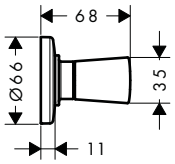			
Logis Shut-off valve for concealed installation · connection type: DN15/DN20	Chrome	71970000	27.40
Required parts:			
· Basic set 52 l/ min for shut-off valve for concealed installation spindle		15973180	80.60
· Basic set 40 l/ min for shut-off valve for concealed installation ceramic		15974180	83.70
· Basic set 130 l/ min for shut-off valve for concealed installation spindle		15970180	87.50
Optional parts:			
· Extension set 2.5 cm		96370000	45.40

Basic sets

 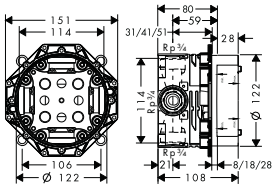			
Basic set iBox universal · suitable for all shower, bath tub and thermostat finish sets for concealed installation · connection thread · Rp ¾ · rotationally-symmetric installation · sound-decoupled installation · connection dimension: DN20		01800180	130.80
Alternative products:			
· Basic set iBox universal with shut-off unit		01850180	169.90
Optional parts:			
· Extension iBox universal basic set 2.5 cm		13595000	47.10
· Fastening rail set for iBox universal		96615000	33.40
· Assembly aid for iBox universal		93500000	12.20
 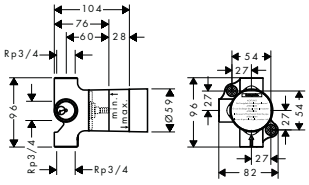			
Basic set for Trio shut-off/ diverter valve for concealed installation · 2 functions · simultaneous utilization by 2 outlets · suitable for all Trio finish sets · flow rate: 65 l/ min · connection dimension: DN20		15981180	159.00
Optional parts:			
· Extension set 2.5 cm		96370000	45.40
 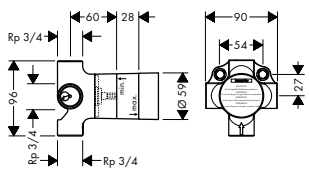			
Basic set for Quattro four-way diverter valve for concealed installation · requires volume control · 3 functions · simultaneous utilization by 2 outlets · suitable for all Quattro finish sets · flow rate: 65 l/ min · connection dimension: DN20		15930180	250.70
Optional parts:			
· Extension set 2.5 cm		96370000	45.40

Measurements within scale drawings are in mm.

Technical specifications and units of measure are subject to change.

	finish	code no.	Euro
 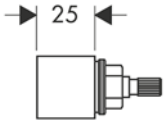		96370000	45.40
Extension set 2.5 cm · extension length: 25 mm			
 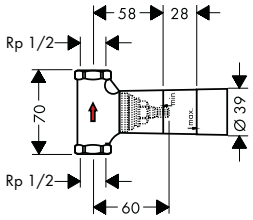		15973180	80.60
Basic set 52 l/ min for shut-off valve for concealed installation spindle · connection type: DN15 · suitable for all shut-off valves finish sets · flow rate: 52 l/ min · connection dimension: DN15			
Alternative products:			
· Basic set 40 l/ min for shut-off valve for concealed installation ceramic		15974180	83.70
· Basic set 130 l/ min for shut-off valve for concealed installation spindle		15970180	87.50
Optional parts:			
· Extension set 2.5 cm		96370000	45.40

Measurements within scale drawings are in mm.

Technical specifications and units of measure are subject to change.

hansgrohe

iBox® universal



Hansgrohe iBox® universal: one for all. All finish sets and overhead showers at a glance.

iBox universal



01800180

PuraVida bath



15445, -000, -400
15447, -000, -400

PuraVida shower



15665, -000, -400

PuraVida
thermostatic mixer
with shut-off valve



15771, -000, -400

PuraVida iControl
with shut-off/
diverter valve



15777, -000

Metropol bath
with lever handle



32545, -000
32546, -000

Metropol bath
with loop handle



74545, -000
74546, -000

Metropol shower
with lever handle



32565, -000

Metropol shower
with loop handle



74565, -000

Metropol Classic
bath



31345, -000, -090

Metropol Classic
shower



31365, -000, -090

Metris bath



31493, -000
31487, -000

Metris shower



31685, -000

Metris bath



31454, -000
31451, -000

Metris shower



31456, -000

Metris S bath



31465, -000
31466, -000

Metris S shower



31665, -000

Talis E bath



71745, -000
71474, -000

Talis E shower



71765, -000
71768, -000

Talis S bath



72405, -000
72406, -000

Talis S shower



72605, -000

Talis S bath



32475, -000
32477, -000

Talis S shower



32675, -000

Focus bath



31945, -000
31946, -000

Focus shower



31965, -000



71045, -000



71065, -000

Logis bath



71405, -000

Logis shower



71605, -000

Eocstat
thermostatic mixer
for 1 function



15712, -000

Eocstat
thermostatic mixer
for 2 functions



15714, -000

Ecostat E
thermostatic mixer



15705, -000

Ecostat E
thermostatic mixer
highflow



15706, -000

Ecostat E
thermostatic mixer
for 1 function



15707, -000

Ecostat E
thermostatic mixer
for 2 functions



15708, -000

Ecostat S
thermostatic mixer



15755, -000

Ecostat S
thermostatic mixer
highflow



15756, -000

Ecostat S
thermostatic mixer
with shut-off valve



15757, -000

Ecostat S
thermostatic mixer
with shut-off/diverter
valve



15758, -000

ShowerSelect
thermostatic mixer
for 1 function



15762, -000

ShowerSelect
thermostatic mixer
for 2 functions



15763, -000

ShowerSelect
thermostatic mixer
highflow for 1 function



15760, -000

ShowerSelect
thermostatic mixer
highflow for 1 function
and 1 additional
function



15761, -000

ShowerSelect
valve for 3 func-
tions



15764, -000

ShowerSelect
thermostatic mixer
for 2 functions with
FixFit and porter unit



15765, -000

ShowerSelect
mixer for 1 function



15767, -000

ShowerSelect
mixer for 2 functions



15768, -000

ShowerSelect glass
thermostatic mixer
for 1 function



15737, -400, -600

ShowerSelect glass
thermostatic mixer
for 2 functions



15738, -400, -600

ShowerSelect glass
thermostatic mixer
highflow for 1 function



15734, -400, -600

ShowerSelect glass
thermostatic mixer
highflow for 1 function
and 1 additional
function



15735, -400, -600

ShowerSelect glass
valve for 3 functions



15736, -400, -600

ShowerSelect S
thermostatic mixer
for 1 function



15744, -000

ShowerSelect S ther-
mostatic mixer
for 2 functions



15743, -000

ShowerSelect S
thermostatic mixer
highflow for 1 function



15741, -000

ShowerSelect S
thermostatic mixer
highflow for 1 function
and 1 additional
function



15742, -000

ShowerSelect S
valve for 3
functions



15745, -000

ShowerSelect S
mixer for 1 function



15747, -000

ShowerSelect S
mixer for 2 functions



15748, -000

Rainmaker Select
460 3jet



24007, -400

Rainmaker Select
460 2jet



24005, -400

Rainmaker Select
580 3jet



24001, -400

Raindance
Rainfall
240 Air 3jet



28410, -000

Raindance
Rainfall
180 Air 2jet



28433, -000

Raindance
Select E
300 3jet



26468, -000

iBox universal

		finish	code no.	Euro
	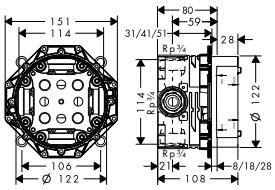	**Basic set iBox universal** · suitable for all shower, bath tub and thermostat finish sets for concealed installation · connection thread · Rp ¾ · rotationally-symmetric installation · sound-decoupled installation · connection dimension: DN20		01800180	130.80
		Alternative products:			
		· Basic set iBox universal with shut-off unit		01850180	169.90
		Optional parts:			
		· Extension iBox universal basic set 2.5 cm		13595000	47.10
		· Fastening rail set for iBox universal		96615000	33.40
		· Assembly aid for iBox universal		93500000	12.20
	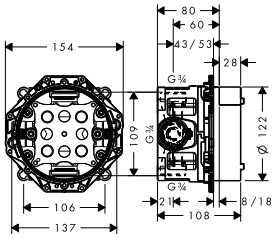	**Basic set iBox universal with shut-off unit** · suitable for all shower, bath tub and thermostat finish sets for concealed installation · connection thread · Rp ¾ · sound-decoupled installation · connection dimension: DN20		01850180	169.90
		Alternative products:			
		· Basic set iBox universal		01800180	130.80
		Optional parts:			
		· Extension iBox universal basic set 2.5 cm		13595000	47.10
		· Fastening rail set for iBox universal		96615000	33.40
		· Assembly aid for iBox universal		93500000	12.20
		**Assembly aid for iBox universal** · spirit levels for correct horizontal and vertical alignment of the iBox universal · with fixations to simply put the assembly aid on the iBox universal · markings for the tile spacer · 4 more fixation aids all around, thus against rotation		93500000	12.20
	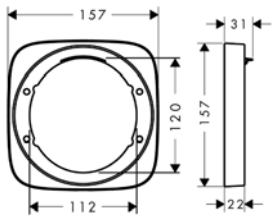	**PuraVida** Extension element · for installation between tiles and finish set · diameter: 157 mm · extension length: 31 mm	Chrome	15597000	43.60
	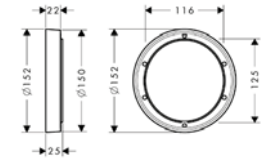	Extension element 15 cm · for installation between tiles and finish set · suitable for all shower and bath tub finish sets Ø 150 mm · diameter: 152 mm · extension length: 22 mm	Chrome	13597000	44.70

Measurements within scale drawings are in mm.

Technical specifications and units of measure are subject to change.

	finish	code no.	Euro
 			
ShowerSelect Extension element · for installation between tiles and finish set · suitable for all shower and bath tub finish sets Ø 150 mm · diameter: 157 mm · extension length: 22 mm	Chrome	13593000	43.70
 			
ShowerSelect Glass Extension element · for installation between tiles and finish set · diameter: 157 mm · extension length: 22 mm	Chrome	13604000	93.60
 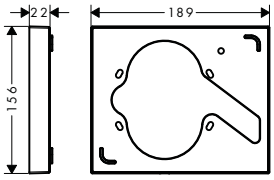			
Extension element ShowerSelect FixFit Porter · for installation between tiles and finish set · extension length: 22 mm	Chrome	13601000	106.20
Optional parts: · **ShowerSelect** Thermostat for concealed installation for 2 functions with hose connection and shower holder	Chrome	15765000	716.00
 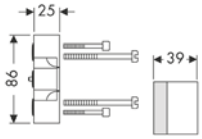			
Extension iBox universal basic set 2.5 cm · extension for basic set · extension length: 25 mm		13595000	47.10
Required parts: · Basic set iBox universal · Basic set iBox universal with shut-off unit		01800180 01850180	130.80 169.90
 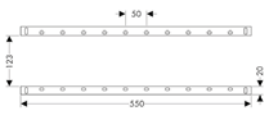			
Fastening rail set for iBox universal		96615000	33.40
			
Flushing board iControl	Chrome	15956000	58.60

Measurements within scale drawings are in mm.

Technical specifications and units of measure are subject to change.

Mixer lines



PuraVida	page 275		Metropol	page 291	
Metris	page 325		Talis	page 347	
Focus	page 381		Novus	page 397	
Logis	page 411				

BATH MIXERS

The perfect product for every style

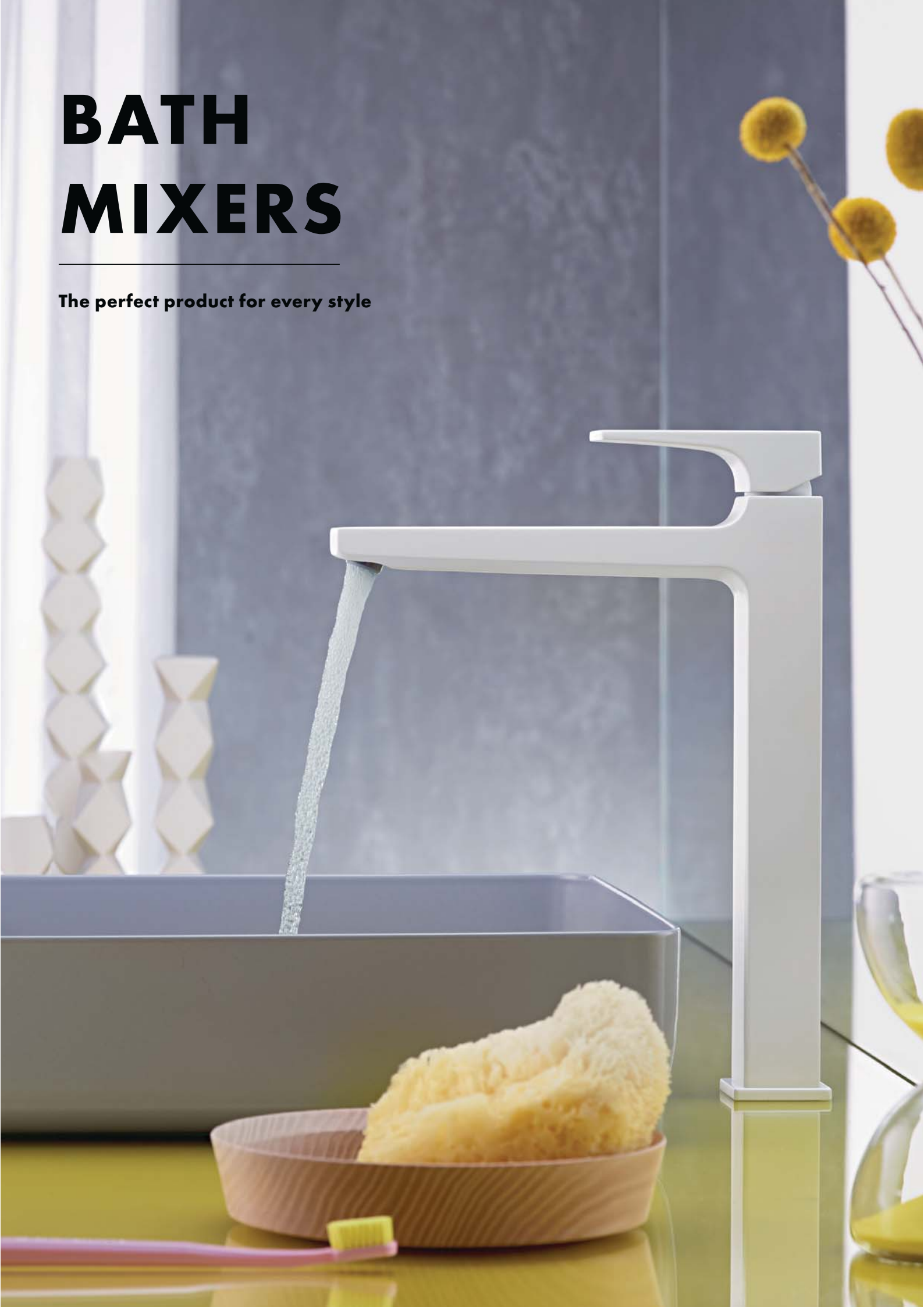

hansgrohe bathroom mixers

Selected taps at a glance

		PuraVida	**Metropol Select**	**Metropol** with loop handle	**Metropol** with lever handle	**Metropol Classic**
						
Basin mixer						
Standard ComfortZone 70–110	Pillar tap				32501, -000	
	With pop-up waste set	15074, -000, -400		74506, -000	32506, -000	31300, -000, -090
	with Push-Open waste set	15070, -000, -400 15075, -000, -400	32571, -000 32570, -000	74507, -000 74502, -000 74500, -000	32507, -XXX 32502, -000 32500, -XXX	
	Without waste set					31301, -000, -090
	For open water heaters					
	LowFlow					
	CoolStart				32508, -000 32503, -000	
Taller models ComfortZone 130–260	With pop-up waste set					31303, -000, -090 31302, -000, -090
	with Push-Open waste set	15072, -000, -400 15081, -000, -400	32572, -000	74512, -000 74511, -000	32512, -XXX 32511, -XXX	
	Without waste set					
With swivel spout	With pop-up waste set					
	with Push-Open waste set					
	Without waste set					
Floor standing				74530, -000	32530, -000	
3-hole		15063, -000		74515, -000 74514, -000	32515, -XXX 32514, -000	31331, -000, -090 31307, -000, -090 31330, -000, -090 31306, -000, -090
Wall mounting		15084, -000, -400 15085, -000, -400		74525, -000 74526, -000	32525, -000 32526, -XXX	
Bidet						
		15270, -000, -400		74520, -000	32520, -XXX	31320, -000, -090
Bath						
	Exposed	15472, -000, -400		74540, -000	32540, -XXX	31340, -000, -090
	concealed	15445, -000, -400		74545, -000	32545, -XXX	31345, -000, -090
	With safety combination	15447, -000, -400		74546, -000	32546, -XXX	
Floor standing		15473, -000, -400		74532, -000	32532, -XXX 32531, -000	31445, -000, -090
2-hole				74548, -000	32548, -000	
3-hole		15432, -000, -400		74550, -000	32550, -000	
4-hole				74552, -000	32552, -000	31441, -000, -090 31449, -000, -090 31315, -000, -090
Bath filler		15412, -000, -400		32543, -000 32542, -000	32542, -000 32543, -XXX	13425, -000, -090
Shower						
	Exposed	15672, -000, -400		74560, -000	32560, -XXX	31360, -000, -090
	concealed	15665, -000, -400		74565, -000	32565, -XXX	31365, -000, -090

hansgrohe bathroom mixers

Selected taps at a glance

		Metris	Metris S	Talis Select E	Talis E
					
Basin mixer					
Standard ComfortZone 70–110	Pillar tap	31166, -000			71706, -000
	With pop-up waste set	31080, -000 31088, -000	31060, -000	71750, -000	71710, -XXX 71700, -000
	with Push-Open waste set				71711, -000 71701, -000
	Without waste set	31084, -000 31186, -000	31068, -000	71751, -000	71712, -XXX 71702, -000
	For open water heaters	31074, -000			71707, -000
	LowFlow	31203, -000 31204, -000	31063, -000 31015, -000 31016, -000		71715, -000 71705, -000
	CoolStart	31121, -000			71713, -XXX 71714, -XXX 71703, -000 71704, -000
Taller models ComfortZone 130–260	With pop-up waste set	31082, -000 31087, -000 31183, -000	31022, -000	71752, -000	71716, -XXX 71754, -XXX
	with Push-Open waste set	31187, -000			
	Without waste set	31184, -000 31081, -000 31185, -000	31023, -000	71753, -000	71717, -XXX 71755, -000
With swivel spout	With pop-up waste set		31159, -000		
	with Push-Open waste set		31161, -000		
	Without waste set				
Floor standing					
3-hole					71733, -XXX
Wall mounting		31085, -000 31086, -000	31162, -000 31163, -000		71732, -000 71734, -XXX
Bidet					
		31280, -000	31261, -000		71720, -XXX 71721, -000
Bath					
	Exposed	31480, -000	31460, -000		71740, -XXX
	concealed	31493, -000 31454, -000	31465, -000		71745, -000
	With safety combination	31487, -000 31451, -000	31466, -000		71474, -000
Floor standing		31471, -000			
2-hole					
3-hole		31190, -000			71747, -000 71730, -000
4-hole		31442, -000	31446, -000 31447, -000		71748, -XXX
Bath filler		31494, -000	14420, -000		71410, -000
Shower					
	Exposed	31680, -000	31660, -000		71760, -XXX
	concealed	31685, -000 31456, -000	31665, -000		71765, -XXX

Talis Select S	Talis S	Talis S Talis	Focus	Novus	Logis
					
	72017, -000	13132, -000	31130, -000		71120, -000
72042, -000 72040, -000	72020, -000 72010, -000	32040, -000 32020, -000	31607, -000 31730, -000	71030, -000 71020, -000	71100, -000 71070, -000 71222, -000
	72011, -000		31604, -000		71107, -000 71077, -000
72043, -000 72041, -000	72021, -000 72012, -000	32041, -000 32031, -000	31517, -000 31733, -000	71031, -000 71021, -000	71101, -000 71071, -000 71221, -000
		32032, -000	31132, -000	71036, -000	71074, -000
	72024, -000 72025, -000 72015, -000 72018, -000		31603, -000 31513, -000 31951, -000 31952, -000	71034, -000 71024, -000	71078, -000
	72022, -000 72023, -000 72013, -000 72014, -000		31621, -000 31539, -000	71032, -000 71022, -000	71102, -000 71103, -000 71072, -000 71073, -000
72044, -000	72031, -000 72115, -000 72113, -000		31531, -000 31608, -000	71123, -000	71090, -000
		32080, -000			
72045, -000	72032, -000 72116, -000 72114, -000		31532, -000 31518, -000	71124, -000	71091, -000
	72105, -000	32084, -000 32070, -000	31609, -000	71126, -000	71130, -000
		32082, -000			
			31519, -000	71128, -000	71131, -000
				71140, -000	71133, -000
	72110, -000 72111, -000		31923, -000	71127, -000	71220, -000 71225, -000
72202, -000	72200, -000	32240, -000	31920, -000 31922, -000	71142, -000	71204, -000 71200, -000
	72400, -000	32440, -000 32420, -000	31940, -000	71040, -000	71400, -000 71243, -000
	72405, -000	32475, -000	31945, -000	71045, -000	71405, -000
	72406, -000	32477, -000	31946, -000	71046, -000	71407, -000
	72412, -000				
	72416, -000				71310, -000
	72418, -000				
	72410, -000	13414, -000	13414, -000	71320, -000	71410, -000
	72600, -000	32640, -000 32620, -000	31960, -000	71060, -000	71600, -000 71263, -000
	72605, -000 72607, -000	32675, -000	31965, -000	71065, -000	71605, -000 71607, -000

PuraVida®





Basin	page 277		Bidet	page 279	
Bath	page 280		Shower	page 282	
Thermostatic mixers/ valves/ diverters	page 283		Showers and shower holder	page 285	
Overhead showers	page 287		Accessories	page 287	

Possible combinations PuraVida

Basin


no.15072000, -400


no.15081000, -400


no.15070000, -400*


no.15075000, -400


no.15085000, -400*


no.15170000, -400*

Bath


no.15472000, -400


no.15445000, -400*


no.15771000, -400*


no.15473000, -400


no.15432000, -400

Shower


no.15672000, -400


no.15665000, -400*


no.15777000


no.27853000, -400


no.28558000, -400*


no.28557000, -400*


no.27437000, -400*

Accessories


no.41503000


no.41508000


no.41505000


no.01800180

* as an example

Basin

	finish	code no.	Euro



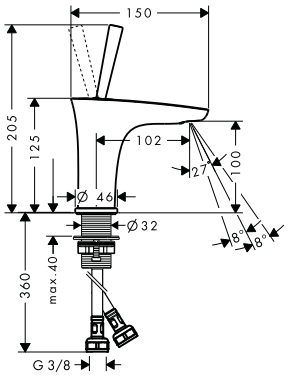

Single lever basin mixer 100 for hand washbasins with push-open waste set

- consists of: single lever basin mixer, waste set
- ComfortZone 100
- projection 102 mm
- laminar spray
- swiveling spray former
- flow rate at 3 bar: 5 l/min
- joystick ceramic cartridge
- suitable for continuous flow water heaters
- push-open waste set G 1¼
- material waste set: metal
- connection type: G ⅜ connections
- connection dimension: DN15

Chrome	15075000	426.00
White/Chrome	15075400	426.00

Eco Smart · Quick Clean · Comfort Zone



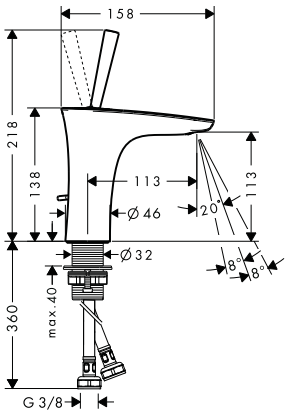

Single lever basin mixer 110 with pop-up waste set

- consists of: single lever basin mixer, waste set
- ComfortZone 110
- projection 113 mm
- laminar spray
- swiveling spray former
- flow rate at 3 bar: 5 l/min
- joystick ceramic cartridge
- suitable for continuous flow water heaters
- pop-up waste set G 1¼
- material waste set: metal
- connection type: G ⅜ connections
- connection dimension: DN15

Chrome	15074000	441.10
White/Chrome	15074400	441.10

Eco Smart · Quick Clean · Comfort Zone

Alternative products:

· Single lever basin mixer 110 with push-open waste set		
Chrome	15070000	441.10
White/Chrome	15070400	441.10



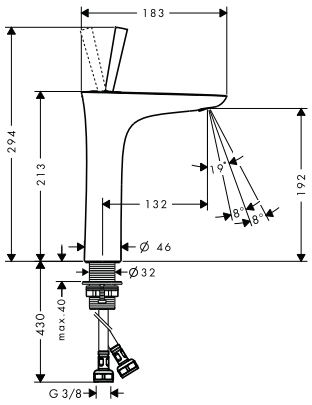

Single lever basin mixer 200 with push-open waste set

- consists of: single lever basin mixer, waste set
- ComfortZone 200
- projection 132 mm
- laminar spray
- swiveling spray former
- flow rate at 3 bar: 5 l/min
- joystick ceramic cartridge
- suitable for continuous flow water heaters
- push-open waste set G 1¼
- material waste set: metal
- connection type: G ⅜ connections
- connection dimension: DN15

Chrome	15081000	521.90
White/Chrome	15081400	521.90

Eco Smart · Quick Clean · Comfort Zone

Measurements within scale drawings are in mm.

Technical specifications and units of measure are subject to change.

	finish	code no.	Euro



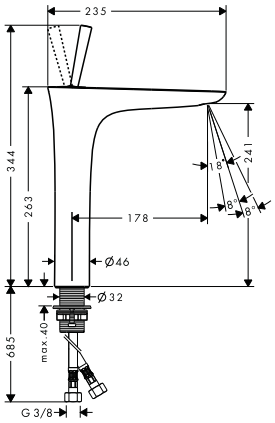

Single lever basin mixer 240 for washbowls with push-open waste set

- consists of: single lever basin mixer, waste set
- ComfortZone 240
- projection 178 mm
- laminar spray
- swiveling spray former
- flow rate at 3 bar: 5 l/min
- joystick ceramic cartridge
- suitable for continuous flow water heaters
- push-open waste set G 1¼
- material waste set: metal
- connection type: G ⅜ connections
- connection dimension: DN15

Chrome	15072000	676.80
White/Chrome	15072400	676.80

Eco Smart · Quick Clean · Comfort Zone



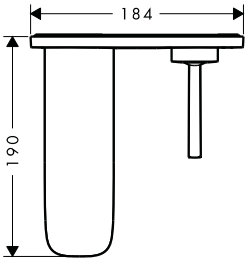

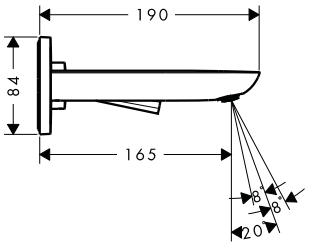

Single lever basin mixer for concealed installation wall-mounted with spout 16.5 cm

- consists of: single lever basin mixer for concealed installation wall-mounted, waste set
- projection 165 mm
- laminar spray
- swiveling spray former
- flow rate at 3 bar: 5 l/min
- joystick ceramic cartridge
- suitable for continuous flow water heaters
- non-closing waste set
- material waste set: metal
- connection type: basic set
- connection dimension: DN15
- handle can be positioned on the right or left

Chrome	15084000	545.80
White/Chrome	15084400	545.80

Eco Smart · Quick Clean

Alternative sizes:

- Single lever basin mixer for concealed installation wall-mounted with spout 22.5 cm

Chrome	15085000	574.00
White/Chrome	15085400	574.00

Required parts:

- Basic set for single lever basin mixer for concealed installation wall-mounted

	13622180	210.00



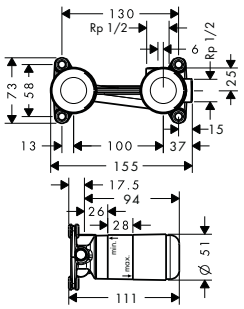

Basic set for single lever basin mixer for concealed installation wall-mounted

- variable positioning of the mixer system, can be left or right of the spout
- connection dimension: DN15

	13622180	210.00

Optional parts:

- Extension set 2.5 cm

	31971000	105.40



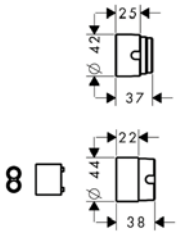

Extension set 2.5 cm

- extension length: 25 mm

	31971000	105.40

Measurements within scale drawings are in mm.

Technical specifications and units of measure are subject to change.

	finish	code no.	Euro



Electronic basin mixer with temperature control battery operation

finish	code no.	Euro
Chrome	15170000	839.30
White/Chrome	15170400	839.30

Air Power · Eco Smart · Comfort Zone

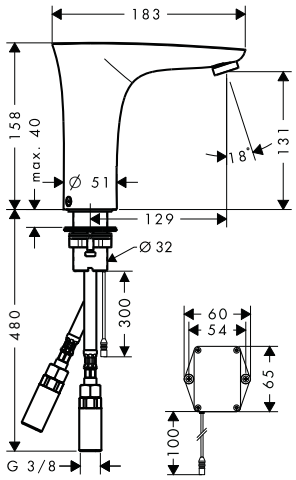

- ComfortZone 130
- projection 129 mm
- flow rate at 3 bar: 5 l/min
- theft-proof aerator
- temperature limitation adjustable
- temperature adjustable via mixer lever on the side
- non-return valve
- suitable for continous flow water heaters
- infrared sensor technology
- automatic environmental adjustment of infrared sensor
- adjustable optical range of infrared sensor (2 settings)
- battery condition indicator available
- battery operation 6 V (Lithium battery, lifetime approx. 2 years, battery included in scope of delivery)
- hygiene rinse activatable (automatic water flow for 10 seconds every 24 hours following the last operation)
- permanent rinse activatable (single water flow for 180 seconds, suitable for thermal disinfection)
- manual water stop for washbasin cleaning
- performance may be impaired if the sensor is obscured by the design of the wash basin, or when the wash basin is oversized and the distance between sensor and the wash basin edge is larger than 75 mm
- functional restriction due to too large distance
- connection dimension: DN15
- TÜV certified
- dirt filters in the connection hoses
- two filter units with fine filter to protect from incoming dirt, for assembly on existing angle valves, filter element can be removed and cleaned

Alternative products:

· Electronic basin mixer with temperature control mains connection 230 V	Chrome	15172000	874.30

Bidet



Single lever bidet mixer with pop-up waste set

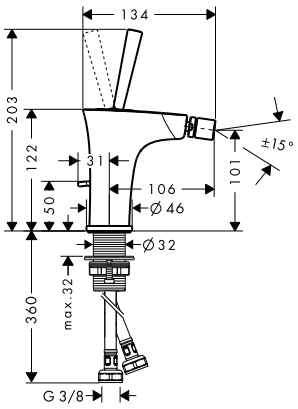

	finish	code no.	Euro
	Chrome	15270000	501.90
	White/Chrome	15270400	501.90

- consists of: single lever bidet mixer, waste set
- projection 106 mm
- ball-pivot joint
- laminar spray
- flow rate at 3 bar: 7.2 l/min
- joystick ceramic cartridge
- suitable for continous flow water heaters
- material waste set: metal
- connection dimension: DN15

Measurements within scale drawings are in mm.

Technical specifications and units of measure are subject to change.

	finish	code no.	Euro



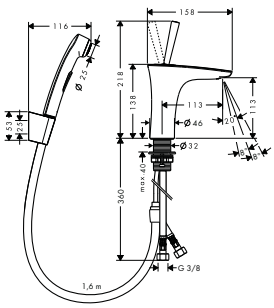

Single lever basin mixer with bidette hand shower and shower hose 160 cm

White/Chrome 15275400 526.40

Air Power · Eco Smart · Quick Clean · Comfort Zone

- consists of: single lever basin mixer, bidette hand shower, shower holder, shower hose, waste set
- ComfortZone 110
- flow rate at 3 bar: 5 l/ min
- ceramic cartridge
- temperature limitation adjustable
- suitable for continuous flow water heaters
- push-open waste set G 1¼
- material waste set: metal
- connection type: G ⅜ connections
- connection dimension: DN15

Bath



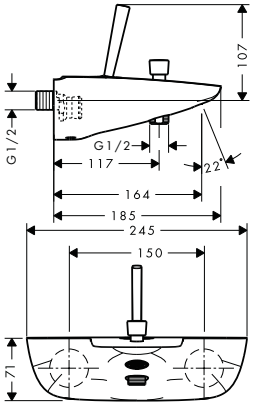

Single lever bath mixer for exposed installation

Chrome 15472000 803.40
White/Chrome 15472400 803.40

- projection 164 mm
- connection type: s-shaped connections
- centre distance: 150 ± 12 mm
- spray type mixer: normal spray
- flow rate for bath spout at 3 bar: 19 l/ min
- flow rate of hand shower at 3 bar: 23 l/ min
- joystick ceramic cartridge
- min. operating pressure: 1 bar
- max. operating pressure: 10 bar
- diverter with automatic resetting
- non-return valve
- with silencer
- suitable for continous flow water heaters
- connection dimension: DN15



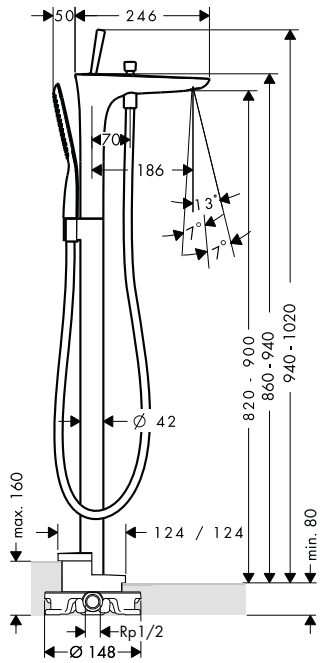

Single lever bath mixer floor-standing

Chrome 15473000 2,273.80
White/Chrome 15473400 2,273.80

Air Power · Eco Smart

- consists of: single lever bath mixer floor standing, baton hand shower, shower hose, shower holder
- projection 186 mm
- connection type: basic set
- spray type mixer: normal spray
- spray type hand shower: RainAir
- flow rate at 3 bar: 20 l/ min
- joystick ceramic cartridge
- min. operating pressure: 1 bar
- max. operating pressure: 10 bar
- diverter with automatic resetting
- intrinsically safe against backflow
- connection dimension: DN15

Consisting of:

- Baton hand shower 120 1jet (# 28558XXX)
- Shower hose 125 cm (# 28272XXX)

Required parts:

- Basic set for mixers floor-standing 10452180 437.90
- Sealing foil for basic set bath mixer floor-standing 96441000 118.90

Measurements within scale drawings are in mm.

Technical specifications and units of measure are subject to change.

	finish	code no.	Euro
 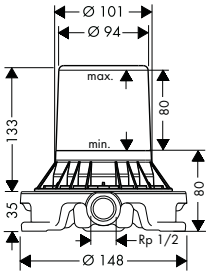			
Basic set for mixers floor-standing · for mounting on unfinished floor · suitable for single lever bath mixer, single lever basin mixer and bath spout floor-standing · connection dimension: DN15		10452180	437.90
Optional parts:			
· Sealing foil for basic set bath mixer floor-standing		96441000	118.90
 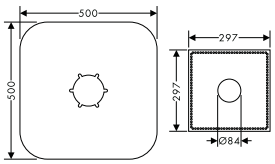			
Sealing foil for basic set bath mixer floor-standing		96441000	118.90
 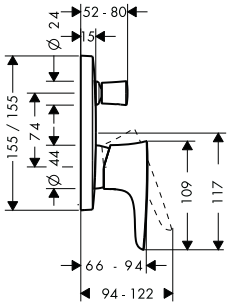			
Single lever bath mixer for concealed installation · connection type: basic set · ceramic cartridge · min. operating pressure: 1 bar · max. operating pressure: 10 bar · temperature limitation adjustable · diverter with automatic resetting	Chrome White/Chrome	15445000 15445400	448.80 448.80
Alternative products:			
· Single lever bath mixer for concealed installation with integrated security combination according to EN1717	Chrome White/Chrome	15447000 15447400	600.90 600.90
Required parts:			
· Basic set iBox universal		01800180	130.80
Optional parts:			
· Extension element	Chrome	15597000	43.60
 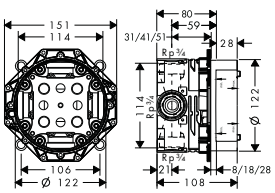			
Basic set iBox universal · suitable for all shower, bath tub and thermostat finish sets for concealed installation · connection thread · Rp ¾ · rotationally-symmetric installation · sound-decoupled installation · connection dimension: DN20		01800180	130.80
Alternative products:			
· Basic set iBox universal with shut-off unit		01850180	169.90
Optional parts:			
· Extension iBox universal basic set 2.5 cm		13595000	47.10
· Fastening rail set for iBox universal		96615000	33.40
· Assembly aid for iBox universal		93500000	12.20

Measurements within scale drawings are in mm.

Technical specifications and units of measure are subject to change.

	finish	code no.	Euro
Bath spout	Chrome	15412000	292.90
	White/Chrome	15412400	292.90



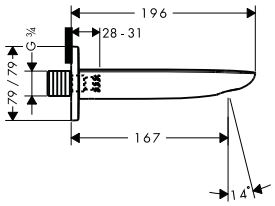

- projection 196 mm
- wall-mounted
- flow rate: 25 l/min
- connection dimension: DN20
- spray type: normal spray

3-hole rim mounted single lever bath mixer	Chrome	15432000	1,057.60
	White/Chrome	15432400	1,057.60



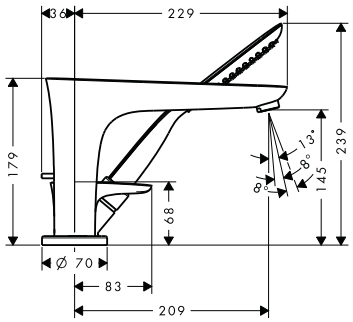

- consists of: 3-hole rim mounted single lever bath mixer, baton hand shower, shower holder
- projection 229 mm
- connection type: basic set
- spray type mixer: normal spray
- spray type hand shower: RainAir
- maximum pull-out length of hand shower: 1.10 m
- flow rate at 3 bar: 22 l/min
- ceramic cartridge
- min. operating pressure: 1 bar
- max. operating pressure: 10 bar
- temperature limitation adjustable
- non-return valve
- connection dimension: DN15

Consisting of:
- Baton hand shower 120 1jet (# 28558XXX)

Required parts:

· Basic set for 3-hole rim mounted single lever bath mixer	13437180	653.90

Basic set for 3-hole rim mounted single lever bath mixer	13437180	653.90



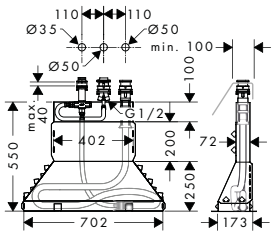

- consists of: basic set, shower hose, Secubox
- maximum pull-out length of hand shower: 1.10 m
- connection thread: G ½
- connection dimension: DN15

Optional parts:

· Secuflex insert extension	98806000	3.80

Shower

Single lever shower mixer for exposed installation	Chrome	15672000	639.40
	White/Chrome	15672400	639.40



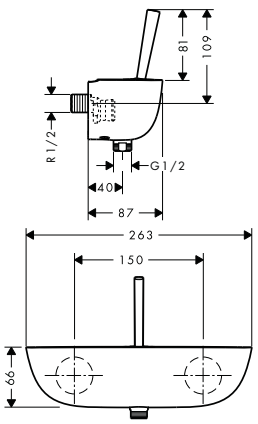

- 1 function
- connection type: s-shaped connections
- centre distance: 150 ± 12 mm
- flow rate of hand shower at 3 bar: 25 l/min
- joystick ceramic cartridge
- min. operating pressure: 1 bar
- max. operating pressure: 10 bar
- non-return valve
- with silencer
- hose connection DN15
- connection dimension: DN15

Measurements within scale drawings are in mm.

Technical specifications and units of measure are subject to change.

	finish	code no.	Euro
Single lever shower mixer for concealed installation	Chrome	15665000	395.70
	White/Chrome	15665400	395.70



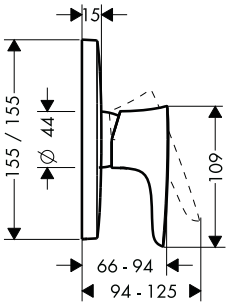

- 1 function
- connection type: basic set
- flow rate at 3 bar: 29.3 l/ min
- ceramic cartridge
- min. operating pressure: 1 bar
- max. operating pressure: 10 bar
- temperature limitation adjustable

Required parts:

· Basic set iBox universal		01800180	130.80

Optional parts:

· Extension element	Chrome	15597000	43.60

Basic set iBox universal

01800180 130.80



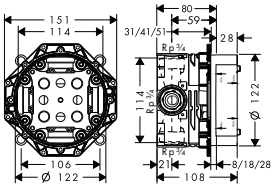

- suitable for all shower, bath tub and thermostat finish sets for concealed installation
- connection thread
- Rp ¾
- rotationally-symmetric installation
- sound-decoupled installation
- connection dimension: DN20

Alternative products:

· Basic set iBox universal with shut-off unit		01850180	169.90

Optional parts:

· Extension iBox universal basic set 2.5 cm		13595000	47.10
· Fastening rail set for iBox universal		96615000	33.40
· Assembly aid for iBox universal		93500000	12.20

Thermostatic mixers/ valves/ diverters

Thermostat for concealed installation with shut-off/ diverter valve	Chrome	15771000	1,178.70
	White/Chrome	15771400	1,178.70



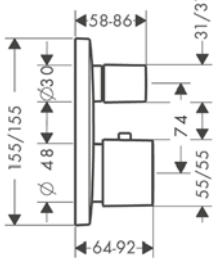

- 2 functions
- flow rate: 26 l/ min
- thermostat cartridge
- min. operating pressure: 1 bar
- max. operating pressure: 10 bar
- safety lock at 40° C
- temperature limitation adjustable
- volume control
- connection type: basic set

Required parts:

· Basic set iBox universal		01800180	130.80

Optional parts:

· Extension element	Chrome	15597000	43.60

Measurements within scale drawings are in mm.

Technical specifications and units of measure are subject to change.

	finish	code no.	Euro
 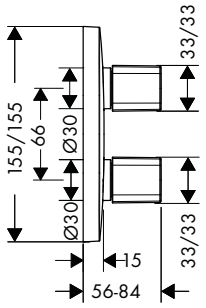			
Shut-off/ diverter valve iControl for concealed installation for 3 functions · 3 functions · simultaneous utilization by 3 outlets · connection dimension: DN20	Chrome	15777000	424.20
Required parts:			
· Basic set iBox universal		01800180	130.80
Optional parts:			
· Extension element	Chrome	15597000	43.60
· Extension iBox universal basic set 2.5 cm		13595000	47.10
· Flushing board iControl	Chrome	15956000	58.60
 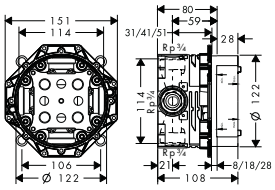			
Basic set iBox universal · suitable for all shower, bath tub and thermostat finish sets for concealed installation · connection thread · Rp ¾ · rotationally-symmetric installation · sound-decoupled installation · connection dimension: DN20		01800180	130.80
Alternative products:			
· Basic set iBox universal with shut-off unit		01850180	169.90
Optional parts:			
· Extension iBox universal basic set 2.5 cm		13595000	47.10
· Fastening rail set for iBox universal		96615000	33.40
· Assembly aid for iBox universal		93500000	12.20
 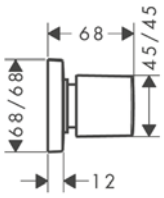			
Shut-off valve for concealed installation · connection type: DN15/DN20	Chrome White/Chrome	15978000 15978400	144.40 144.40
Required parts:			
· Basic set 52 l/ min for shut-off valve for concealed installation spindle		15973180	80.60
· Basic set 40 l/ min for shut-off valve for concealed installation ceramic		15974180	83.70
· Basic set 130 l/ min for shut-off valve for concealed installation spindle		15970180	87.50
 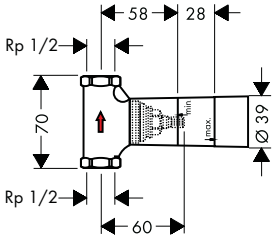			
Basic set 52 l/ min for shut-off valve for concealed installation spindle · connection type: DN15 · suitable for all shut-off valves finish sets · flow rate: 52 l/ min · connection dimension: DN15		15973180	80.60
Alternative products:			
· Basic set 40 l/ min for shut-off valve for concealed installation ceramic		15974180	83.70
· Basic set 130 l/ min for shut-off valve for concealed installation spindle		15970180	87.50
Optional parts:			
· Extension set 2.5 cm		96370000	45.40

Measurements within scale drawings are in mm.

Technical specifications and units of measure are subject to change.

Showers and shower holder

	finish	code no.	Euro



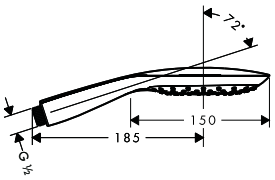

Hand shower 150 3jet

- shower head size: 150 mm
- spray type: RainAir, CaresseAir, Mix
- convenient diversion via Select button
- hand shower with 2-shell construction
- maximum flow rate at 3 bar: 16 l/ min
- with internal water conduction
- rinseable dirt filter
- connection thread G ½
- connection dimension: DN15
- suitable for continous flow water heaters
- the hand shower shouldn't be combined with sliders which have two adjustable positions

Chrome	28557000	165.10
White/Chrome	28557400	165.10

Select · Air Power · Quick Clean · XXL Performance

Water saving EcoSmart version:

- Hand shower 3jet EcoSmart 9 l/ min

Chrome	28567000	169.60
White/Chrome	28567400	169.60



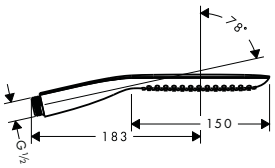

Baton hand shower 120 1jet

- shower head size: 150 mm
- spray type: RainAir
- hand shower with 2-shell construction
- maximum flow rate at 3 bar: 16 l/ min
- with internal water conduction
- rinseable dirt filter
- connection thread G ½
- connection dimension: DN15
- suitable for continous flow water heaters

Chrome	28558000	103.90
White/Chrome	28558400	103.90

Air Power · Quick Clean · XXL Performance

Water saving EcoSmart version:

- Baton hand shower 120 1jet EcoSmart 9 l/ min

Chrome	28568000	108.80
White/Chrome	28568400	108.80



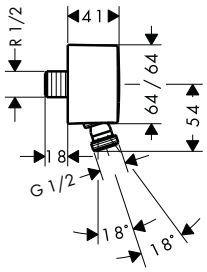

Wall outlet with non-return valve and pivot joint

- shower hose connection with ball joint
- plastic connection angle with metal ball joint
- non-return valve
- installation: wall
- hose nut: for shower hoses with conical nut on both sides

Chrome	27414000	40.10



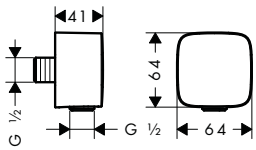

Wall outlet with non-return valve

- non-return valve
- installation: wall

	Chrome	26457000	25.20
NEW	Brushed Bronze	26457140	37.80
NEW	Brushed Black	26457340	37.80
	Chrome		
NEW	Matt Black	26457670	35.30
NEW	Matt White	26457700	35.30
NEW	Polished Gold Optic	26457990	37.80



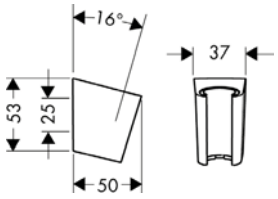

Shower holder Porter S

- fixed holding position
- for hoses with conical nut

Chrome	28331000	23.70
Brushed Bronze	28331140	35.60
Brushed Black	28331340	35.60
Chrome		
Matt Black	28331670	33.20
Matt White	28331700	33.20
Stainless Steel Optic	28331800	35.50
Polished Gold Optic	28331990	35.60

Measurements within scale drawings are in mm.

Technical specifications and units of measure are subject to change.

	finish	code no.	Euro

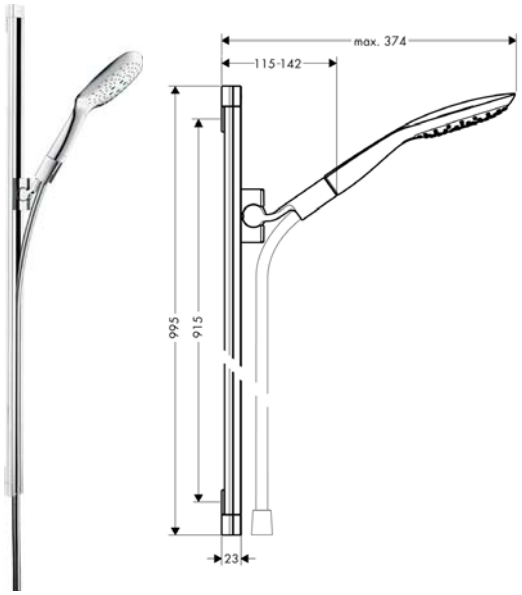

Shower set with shower bar 90 cm

Chrome	27853000	415.20
White/Chrome	27853400	415.20

Select · Air Power · Quick Clean · XXL Performance

- consists of: hand shower, shower bar, shower hose, slider
- shower head size: 150 mm
- spray type: RainAir, CaresseAir, Mix
- convenient diversion via Select button
- pivot connector prevent hose from tangling
- 90° position adjustable slider, pivots left and right, up and down
- maximum flow rate at 3 bar: 16 l/min
- wall supports of plastic

Consisting of:
- Hand shower 150 3jet (# 28557XXX)
- Shower bar PuraVida 90 cm with shower hose (# 27844000)
- Shower hose 160 cm (# 28276XXX)

Optional parts:

Corner fitting set		28694000	32.70
Wall bar spacer	Chrome	98993000	7.60

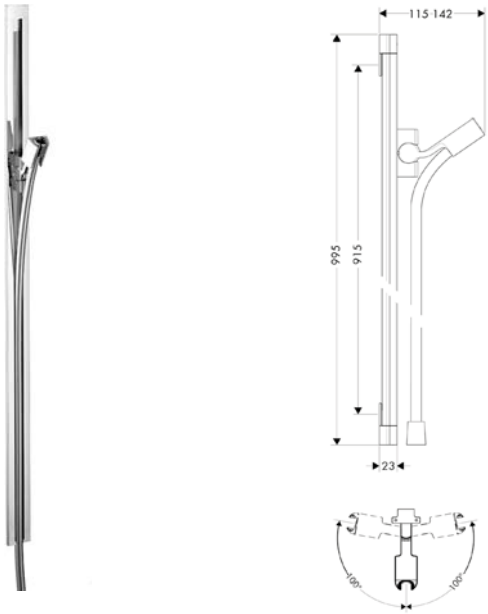

Shower bar PuraVida 90 cm with shower hose

Chrome	27844000	275.30

- consists of: shower bar, shower hose, slider
- wall bar type: flat and slim aluminium profile
- metal shower slide
- self-locking slide
- slide inclination angle steplessly adjustable
- silent inclination angle adjustment

Consisting of:
- Shower hose 160 cm (# 28276XXX)

Optional parts:

Corner fitting set		28694000	32.70
Soap dishes Raindance	Chrome	28698000	73.80
Wall bar spacer	Chrome	98993000	7.60



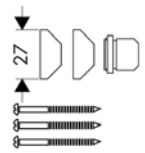

Corner fitting set

28694000		32.70

- material: plastic



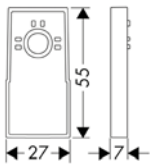

Wall bar spacer

Chrome	98993000	7.60

- also usable as an extension
- material: plastic

Measurements within scale drawings are in mm.

Technical specifications and units of measure are subject to change.

Body showers



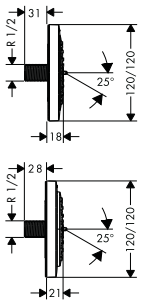

	finish	code no.	Euro
Body shower 100 1jet · shower head size: 100 mm · spray type: RainAir · spray type adjustment by turning spray disc · 360° range of rotation · rosette: angular · flow rate RainAir spray (at 3 bar): 4.5 l/ min · connection thread: G ½ · connection dimension: DN15	Chrome White/Chrome	28430000 28430400	140.40 140.40

Overhead showers



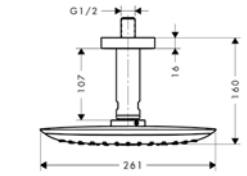

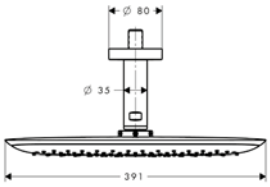

	finish	code no.	Euro
Overhead shower 400 1jet with ceiling connector · consists of: overhead shower, ceiling connector · spray type: RainAir · shower head size: 390 x 260 mm · ball-joint: overhead shower angle adjustable · flow rate RainAir spray (at 3 bar): 21 l/ min · spray disc surface in two variants: chrome or white · material spray disc: metal · ceiling connection length: 100 mm · installation: ceiling · connection thread G ½ · connection dimension: DN15	Chrome White/Chrome	27390000 27390400	1,147.10 1,147.10
Optional parts: · Thermostat for concealed installation with shut-off/ diverter valve	Chrome White/Chrome	15771000 15771400	1,178.70 1,178.70



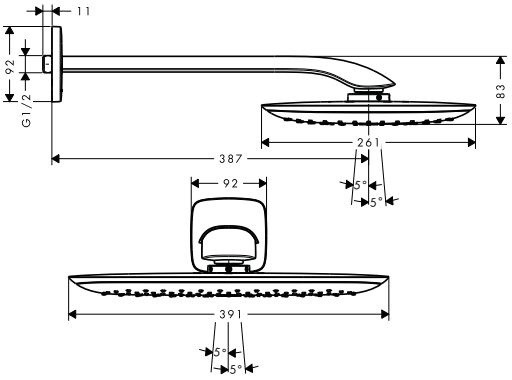

	finish	code no.	Euro
Overhead shower 400 1jet with shower arm · consists of: overhead shower, shower arm · spray type: RainAir · shower head size: 390 x 260 mm · shower arm length: 390 mm · flow rate RainAir spray (at 3 bar): 21 l/ min · spray disc surface in two variants: chrome or white · material spray disc: metal · installation: wall · connection thread G ½ · connection dimension: DN15	Chrome White/Chrome	27437000 27437400	1,237.60 1,237.60
Optional parts: · Thermostat for concealed installation with shut-off/ diverter valve	Chrome White/Chrome	15771000 15771400	1,178.70 1,178.70

Accessories



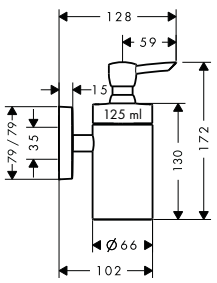

	finish	code no.	Euro
Liquid soap dispenser · wall-mounted · filling capacity 125 ml · dosage 1.5 ml · material holder: metal	Chrome	41503000	137.20

Measurements within scale drawings are in mm.

Technical specifications and units of measure are subject to change.

	finish	code no.	Euro
Toothbrush tumbler · wall-mounted · material holder: metal	Chrome	41504000	101.60



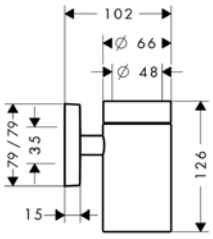

Soap dish · material: brass, ceramic · wall-mounted · material holder: metal	Chrome	41502000	100.10



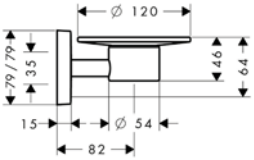

Towel hook · material: brass · wall-mounted	Chrome	41501000	18.20



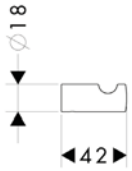

Towel holder twin-handle · wall-mounted · material holder: metal · length 445 mm · swivelling	Chrome	41512000	119.30





Grab rail · drilling distance 300 mm · wall-mounted · material holder: metal · length 466 mm · TÜV certified	Chrome	41513000	119.30



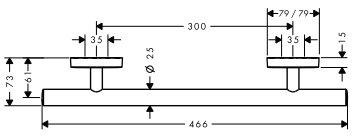

Bath towel rail · drilling distance 600 mm · wall-mounted · material holder: metal · length 763 mm	Chrome	41506000	137.20



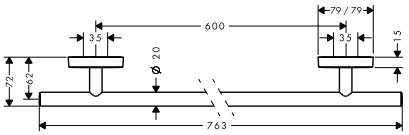

Measurements within scale drawings are in mm.

Technical specifications and units of measure are subject to change.

		finish	code no.	Euro
	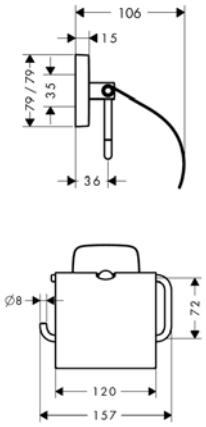	**Roll holder with cover** · wall-mounted · material holder: metal	Chrome	41508000	128.10
	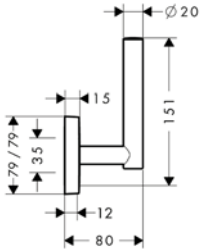	**Spare roll holder** · wall-mounted · material holder: metal · for spare rolls	Chrome	41518000	100.10
	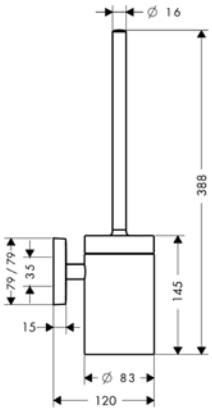	**Toilet brush with tumbler wall-mounted** · material holder: metal · material: brass, ceramic · wall-mounted	Chrome	41505000	164.00

Measurements within scale drawings are in mm.

Technical specifications and units of measure are subject to change.

Metropol®



Metropol page 292



Metropol Classic page 318



Possible combinations Metropol

Basin mixer 260


no.32572000


no.32512000


no.74512000

Basin mixer 230


no.32511000


no.74511000

Basin mixer 110


no.32571000


no.32507000*


no.74507000*

Basin mixer 100


no.32570000


no.32502000*


no.74502000


no.32500000


no.74500000

3-hole basin mixer


no.32515000


no.74515000


no.32514000


no.74514000

2-hole wall-mounted


no.32526000


no.74526000


no.32525000


no.74525000

Floor-standing basin mixer



no.32530000



no.74530000

Floor-standing bath mixer



no.32532000



no.74532000



no.32540000*



no.74540000*



no.32545000*



no.74545000*



no.13151000, -400

Bath



no.32550000*



no.74550000*



no.32552000*



no.74552000*



no.32531000



no.32548000



no.74548000



no.32543000



no.32542000

Shower



no.32560000*



no.74560000*



no.32565000



no.74565000



no.13171000, -400

* as an example

Additional FinishPlus products Metropol

Hand showers and accessories



Rainfinity®
Hand shower 130 3jet
26864, -000, -140, -340, -670, -700, -990
Hand shower 130 3jet EcoSmart
26865, -000, -140, -340, -670, -700, -990



Rainfinity®
Baton hand shower 100 1jet
26866, -000, -140, -340, -670, -700, -990
Baton hand shower 100 1jet EcoSmart
26867, -000, -140, -340, -670, -700, -990



Raindance® Select E
Hand shower 120 3jet
26520, -000, -140, -340, -400, -670, -700, -990

Raindance® Select S
Hand shower 120 3jet
26530, -000, -140, -340, -400, -670, -700, -990 (not shown)

Hand shower 120 3jet EcoSmart 9 l/min
26531, -000, -140, -340, -400, -670, -700, -990 (not shown)



FixFit®
Wall outlet Square
with non-return valve
26455, -000, -140, -340, -670, -700, -990
Wall outlet E without non-return valve
27454, -000, -140, -340, -670, -700, -990 (not shown)
Wall outlet with non-return valve
26457, -000, -140, -340, -670, -700, -990 (not shown)
Wall outlet S with non-return valve
and synthetic connection angle# 26453, -000, -140, -340, -670, -700, -990 (not shown)



Shower holder Porter E
28387, -000, -140, -340, -670, -700, -990



Isiflex®
Shower hose 125 cm
28272, -000, -140, -340, -670, -700, -990
Shower hose 160 cm
28276, -000, -140, -340, -670, -700, -990

Overhead showers and accessories



Rainfinity®
Overhead shower 360 3jet with wall connector
26234, -000, -140, -340, -670, -700, -990



Rainfinity®
Overhead shower 360 1jet with wall connector
26230, -000, -140, -340, -670, -700, -990



Rainfinity®
Overhead shower 360 1jet
26231, -000, -140, -340, -670, -700, -990



Rainfinity®
Overhead shower 250 1jet
26228, -000, -140, -340, -670, -700, -990
Overhead shower 250 1jet EcoSmart
26229, -000, -140, -340, -670, -700, -990



Raindance® E
Overhead shower 300 1jet with ceiling connector
26250, -000, -140, -340, -670, -700, -990

Overhead shower 300 1jet with shower arm
26238, -000, -140, -340, -670, -700, -990 (not shown)

Croma®
Overhead shower 280 1jet
26220, -000, -140, -340, -670, -700, -990 (not shown)

Overhead shower 280 1jet EcoSmart 9 l/min
26221, -000, -140, -340, -670, -700, -990 (not shown)



Ceiling connector S 10 cm
27393, -000, -140, -340, -670, -700, -990

Ceiling connector S 30 cm
27389, -000, -140, -340, -670, -700, -990 (not shown)

Shower arm square 38.9 cm
27694, -000, -140, -340, -670, -700, -990 (not shown)

Shower arm 38.9 cm
27413, -000, -140, -340, -670, -700, -990 (not shown)

Additional FinishPlus products Metropol

Shower bars and Showerpipes



Unica®
Shower bar S Puro 65 cm
with shower hose
28632, -000, -140, -340, -670, -700, -990

Shower bar S Puro 90 cm
with shower hose (not shown)
28631, -000, -140, -340, -670, -700, -990



Raindance® Select S
Showerpipe 240 1jet P with thermostat
27633, -000, -140, -340, -670, -700, -990

Croma® Select S
Showerpipe 280 1jet with thermostat
26890, -140, -340, -670, -700, -990 (not shown)

Showerpipe 280 1jet EcoSmart 9 l/min with thermostat
26891, -140, -340, -670, -700, -990 (not shown)

Thermostat for exposed / concealed installation



Ecostat®
Shower thermostat Comfort for exposed installation
13116, -000, -140, -340, -670, -700, -990



Ecostat®
Bath thermostat Comfort for exposed installation
13114, -000, -140, -340, -670, -700, -990



RainSelect®
Thermostat for concealed installation
for 2 functions
15380, -000, -140, -340, -670, -700, -990

Basic set for 2 functions
15310180 (not shown)



RainSelect®
Thermostat for concealed installation
for 4 functions
15382, -000, -140, -340, -670, -700, -990

Basic set for 4 functions
15312180 (not shown)



ShowerSelect®
Thermostat for concealed installation
for 2 functions
15763, -000, -140, -340, -670, -700, -990

ShowerSelect® S
Thermostat for concealed installation
for 2 functions
15743, -000, -140, -340, -670, -700, -990 (not shown)



Ecostat® Square
Thermostat for concealed installation
for 2 functions
15714, -000, -140, -340, -670, -700, -990

Ecostat® S
Thermostat for concealed installation
for 2 functions
15758, -000, -140, -340, -670, -700, -990 (not shown)

Additional FinishPlus products Metropol

Wastes and overflow



Exafill® S
Finish set bath filler, waste and overflow set
58117, -000, -140, -340, -670, -700, -990



Flexaplus®
Finish set waste and overflow set
58185, -000, -140, -340, -670, -700, -990



Design trap Flowstar S
52105, -000, -140, -340, -670, -700, -990

Waste set push-open
for basin and bidet mixers
50100, -000, -140, -340, -670, -700, -990 (not shown)
Cover
13950, -000, -140, -670, -700, -990 (not shown)



sBox®
Finish set square
28010, -000, -140, -340, -670, -700, -990

Rim and tile mounted bath basic set
13560180 (not shown)

Installation plate for tile mounted installation
28016000 (not shown)

Mounting angle for installation plate
for tile mounted installation
28021000 (not shown)

Kitchen mixers



Metris® Select M71
2-hole single lever kitchen mixer
with pull-out spray
73818, -000, -340, -670, -800



Focus® M41
Single lever kitchen mixer 240
with pull-out spray
31815, -000, -670, -800



Focus® M41
Single lever kitchen mixer 280
with swivel spout
31817, -000, -670, -800



Focus® M41
Single lever kitchen mixer 260
with swivel spout
31820, -000, -670, -800

-000 Chrome
-140 Brushed Bronze
-340 Brushed Black Chrome
-670 Matt Black
-700 Matt White
-990 Polished Gold Optic

Basin

	finish	code no.	Euro



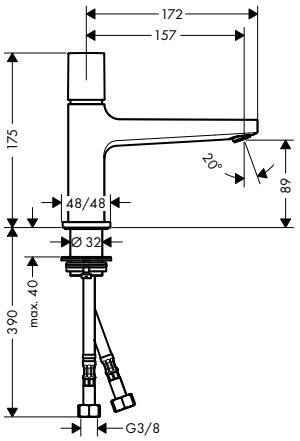

Basin mixer 100 Select with push-open waste set

Chrome 32570000 298.80

- consists of: Basin mixer, waste set
- ComfortZone 100
- projection 157 mm
- normal spray
- flow rate at 3 bar: 5 l/min
- Select cartridge with temperature control
- temperature limitation adjustable
- suitable for continuous flow water heaters
- push-open waste set G 1¼
- material waste set: metal
- connection type: G ⅜ connections
- connection dimension: DN15



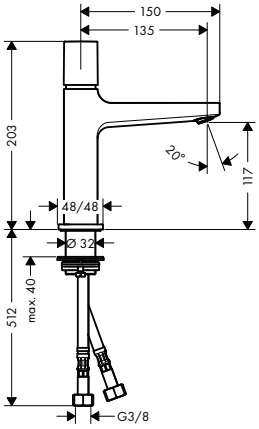

Basin mixer 110 Select with push-open waste set

Chrome 32571000 309.60

- consists of: Basin mixer, waste set
- ComfortZone 110
- projection 135 mm
- normal spray
- flow rate at 3 bar: 5 l/min
- Select cartridge with temperature control
- temperature limitation adjustable
- suitable for continuous flow water heaters
- push-open waste set G 1¼
- material waste set: metal
- connection type: G ⅜ connections
- connection dimension: DN15



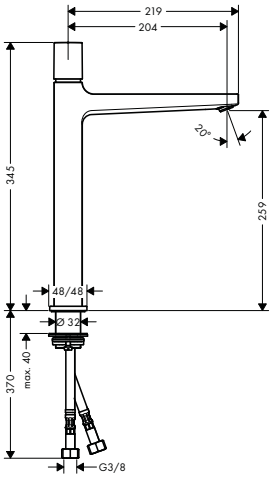

Basin mixer 260 Select with push-open waste set

Chrome 32572000 427.00

- consists of: Basin mixer, waste set
- ComfortZone 260
- projection 204 mm
- normal spray
- flow rate at 3 bar: 5 l/min
- Select cartridge with temperature control
- temperature limitation adjustable
- suitable for continuous flow water heaters
- push-open waste set G 1¼
- material waste set: metal
- connection type: G ⅜ connections
- connection dimension: DN15



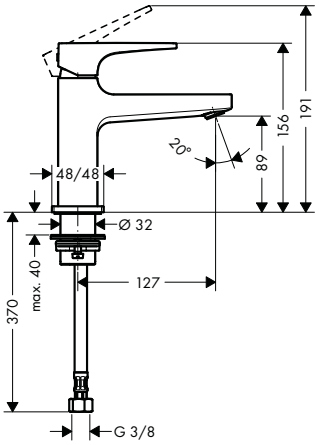

Single lever basin mixer 100 with lever handle for hand washbasins for cold water

Chrome 32501000 234.80

- ComfortZone 100
- projection 127 mm
- normal spray
- flow rate at 3 bar: 5 l/min
- ceramic cartridge
- for cold water connection
- connection type: G ⅜ connections
- connection dimension: DN15

Measurements within scale drawings are in mm.

Technical specifications and units of measure are subject to change.

	finish	code no.	Euro



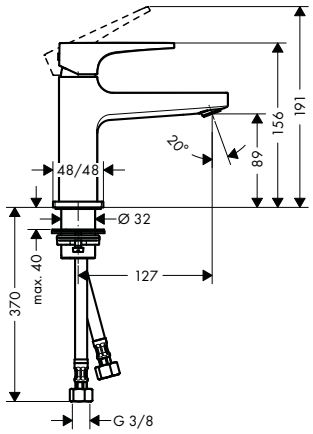

Single lever basin mixer 100 with lever handle for hand washbasins with push-open waste set

- consists of: single lever basin mixer, waste set
- ComfortZone 100
- projection 127 mm
- normal spray
- flow rate at 3 bar: 5 l/min
- ceramic cartridge
- temperature limitation adjustable
- suitable for continuous flow water heaters
- push-open waste set G 1¼
- material waste set: metal
- connection type: G ⅜ connections
- connection dimension: DN15

finish	code no.	Euro
Chrome	32500000	250.80
Brushed Bronze	32500140	376.20
Brushed Black	32500340	376.20
Chrome		
Matt Black	32500670	351.10
Matt White	32500700	351.10
Polished Gold Optic	32500990	376.20

Air Power · Eco Smart · Quick Clean · Comfort Zone



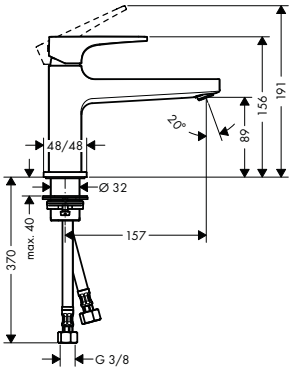

Single lever basin mixer 100 with lever handle and push-open waste set

- consists of: single lever basin mixer, waste set
- ComfortZone 100
- projection 157 mm
- normal spray
- flow rate at 3 bar: 5 l/min
- ceramic cartridge
- temperature limitation adjustable
- suitable for continuous flow water heaters
- push-open waste set G 1¼
- material waste set: metal
- connection type: G ⅜ connections
- connection dimension: DN15

finish	code no.	Euro
Chrome	32502000	256.20

Air Power · Eco Smart · Quick Clean · Comfort Zone

Alternative products:

· Single lever basin mixer 100 CoolStart with lever handle and push-open waste set	Chrome	32503000	261.60



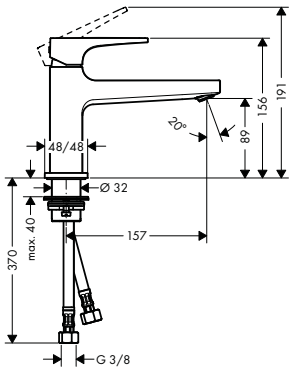

Single lever basin mixer 100 CoolStart with lever handle and push-open waste set

- consists of: single lever basin mixer, waste set
- ComfortZone 100
- projection 157 mm
- normal spray
- flow rate at 3 bar: 5 l/min
- ceramic cartridge
- temperature limitation adjustable
- suitable for continuous flow water heaters
- push-open waste set G 1¼
- material waste set: metal
- connection type: G ⅜ connections
- connection dimension: DN15
- cold water in middle position

finish	code no.	Euro
Chrome	32503000	261.60

Air Power · Eco Smart · Quick Clean · Comfort Zone · Cool Start

Alternative products:

· Single lever basin mixer 100 with lever handle and push-open waste set	Chrome	32502000	256.20

Measurements within scale drawings are in mm.

Technical specifications and units of measure are subject to change.



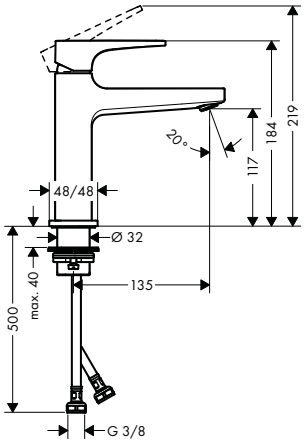

Single lever basin mixer 110 with lever handle and push-open waste set

- consists of: single lever basin mixer, waste set
- ComfortZone 110
- projection 135 mm
- normal spray
- flow rate at 3 bar: 5 l/min
- ceramic cartridge
- temperature limitation adjustable
- suitable for continuous flow water heaters
- push-open waste set G 1¼
- material waste set: metal
- connection type: G ⅜ connections
- connection dimension: DN15

finish	code no.	Euro
Chrome	32507000	272.20
Brushed Bronze	32507140	408.30
Brushed Black	32507340	408.30
Chrome		
Matt Black	32507670	381.10
Matt White	32507700	381.10
Polished Gold Optic	32507990	408.30

Air Power · Eco Smart · Quick Clean · Comfort Zone

Alternative products:

· Single lever basin mixer 110 with lever handle and pop-up waste set	Chrome	32506000	266.90
· Single lever basin mixer 110 CoolStart with lever handle and push-open waste set	Chrome	32508000	277.50



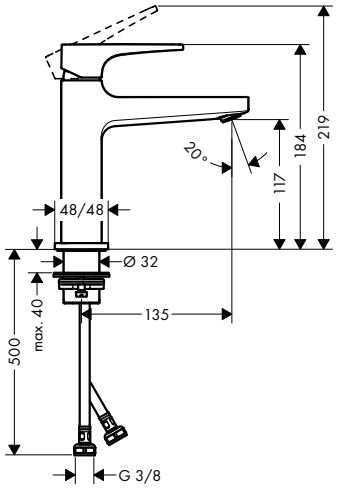

Single lever basin mixer 110 CoolStart with lever handle and push-open waste set

Chrome	32508000	277.50

Air Power · Eco Smart · Quick Clean · Comfort Zone · Cool Start

- consists of: single lever basin mixer, waste set
- ComfortZone 110
- projection 135 mm
- normal spray
- flow rate at 3 bar: 5 l/min
- ceramic cartridge
- temperature limitation adjustable
- suitable for continuous flow water heaters
- push-open waste set G 1¼
- material waste set: metal
- connection type: G ⅜ connections
- connection dimension: DN15
- cold water in middle position

Alternative products:

· Single lever basin mixer 110 with lever handle and pop-up waste set	Chrome	32506000	266.90
· Single lever basin mixer 110 with lever handle and push-open waste set	Chrome	32507000	272.20
	Brushed Bronze	32507140	408.30
	Brushed Black	32507340	408.30
	Chrome		
	Matt Black	32507670	381.10
	Matt White	32507700	381.10
	Polished Gold Optic	32507990	408.30

Measurements within scale drawings are in mm.

Technical specifications and units of measure are subject to change.

	finish	code no.	Euro
Single lever basin mixer 230 with lever handle and push-open waste set	Chrome	32511000	373.60
	Brushed Bronze	32511140	560.40
	Brushed Black	32511340	560.40
	Chrome Matt Black	32511670	523.00
	Matt White	32511700	523.00
	Polished Gold Optic	32511990	560.40



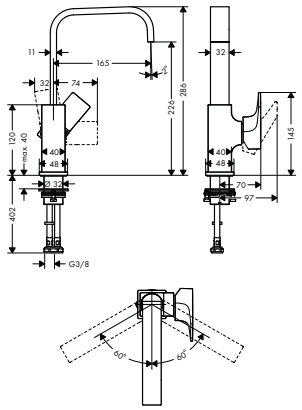

- consists of: single lever basin mixer, waste set
- ComfortZone 230
- projection 165 mm
- swivel range 120°
- normal spray
- flow rate at 3 bar: 5 l/min
- ceramic cartridge
- temperature limitation adjustable
- suitable for continuous flow water heaters
- push-open waste set G 1¼
- material waste set: metal
- connection type: G ⅜ connections
- connection dimension: DN15
- handle position on the side: bottom-side at the base body (not suitable for wash bowls)

Air Power · Eco Smart · Comfort Zone

Single lever basin mixer 260 with lever handle for washbowls with push-open waste set	Chrome	32512000	384.20
	Brushed Bronze	32512140	576.30
	Brushed Black	32512340	576.30
	Chrome Matt Black	32512670	537.90
	Matt White	32512700	537.90
	Polished Gold Optic	32512990	576.30



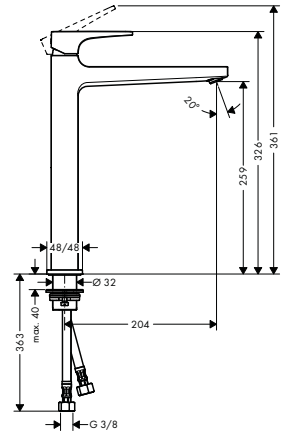

- consists of: single lever basin mixer, waste set
- ComfortZone 260
- projection 204 mm
- normal spray
- flow rate at 3 bar: 5 l/min
- ceramic cartridge
- temperature limitation adjustable
- suitable for continuous flow water heaters
- push-open waste set G 1¼
- material waste set: metal
- connection type: G ⅜ connections
- connection dimension: DN15

Air Power · Eco Smart · Quick Clean · Comfort Zone

Single lever basin mixer 100 with loop handle for hand washbasins with push-open waste set	Chrome	74500000	272.20



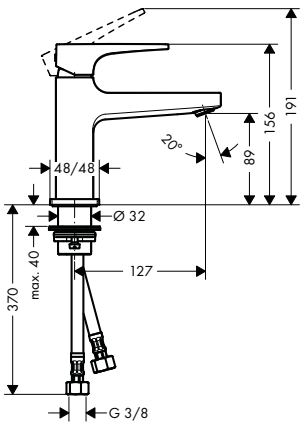

- consists of: single lever basin mixer, waste set
- ComfortZone 100
- projection 127 mm
- normal spray
- flow rate at 3 bar: 5 l/min
- ceramic cartridge
- temperature limitation adjustable
- suitable for continuous flow water heaters
- push-open waste set G 1¼
- material waste set: metal
- connection type: G ⅜ connections
- connection dimension: DN15

Air Power · Eco Smart · Quick Clean · Comfort Zone

Measurements within scale drawings are in mm.

Technical specifications and units of measure are subject to change.

	finish	code no.	Euro

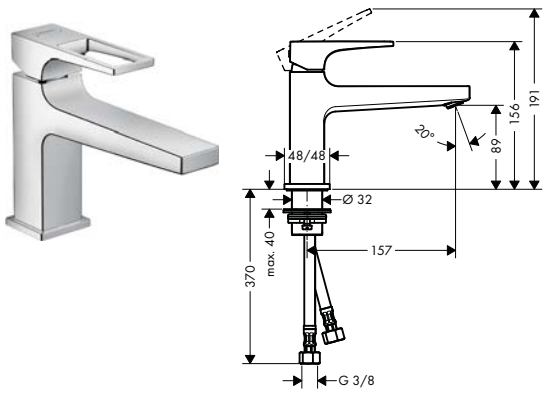

Single lever basin mixer 100 with loop handle and push-open waste set

- consists of: single lever basin mixer, waste set
- ComfortZone 100
- projection 157 mm
- normal spray
- flow rate at 3 bar: 5 l/min
- ceramic cartridge
- temperature limitation adjustable
- suitable for continuous flow water heaters
- push-open waste set G 1¼
- material waste set: metal
- connection type: G ⅜ connections
- connection dimension: DN15

Chrome — 74502000 — 277.50

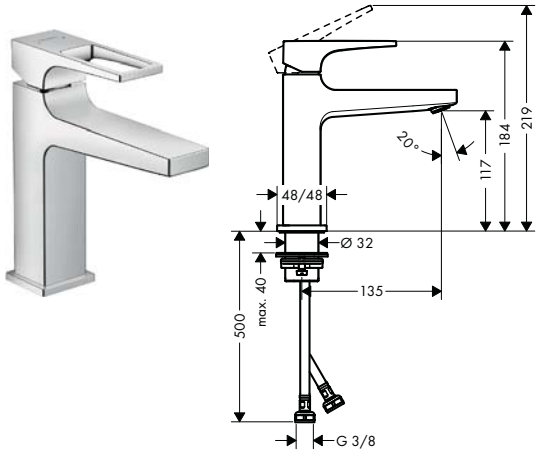

Single lever basin mixer 110 with loop handle and push-open waste set

- consists of: single lever basin mixer, waste set
- ComfortZone 110
- projection 135 mm
- normal spray
- flow rate at 3 bar: 5 l/min
- ceramic cartridge
- temperature limitation adjustable
- suitable for continuous flow water heaters
- push-open waste set G 1¼
- material waste set: metal
- connection type: G ⅜ connections
- connection dimension: DN15

Chrome — 74507000 — 298.80

Alternative products:

- Single lever basin mixer 110 with loop handle and pop-up waste set

Chrome — 74506000 — 293.60

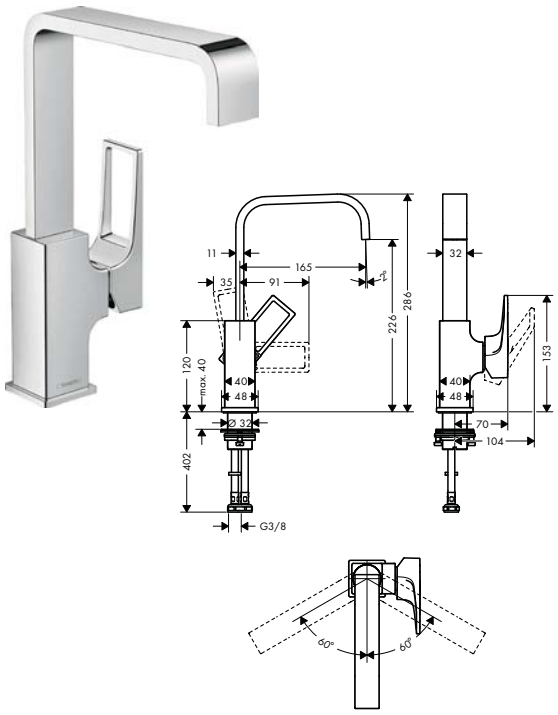

Single lever basin mixer 230 with loop handle and push-open waste set

- consists of: single lever basin mixer, waste set
- ComfortZone 230
- projection 165 mm
- swivel range 120°
- normal spray
- flow rate at 3 bar: 5 l/min
- ceramic cartridge
- temperature limitation adjustable
- suitable for continuous flow water heaters
- push-open waste set G 1¼
- material waste set: metal
- connection type: G ⅜ connections
- connection dimension: DN15
- handle position on the side: bottom-side at the base body (not suitable for wash bowls)

Chrome — 74511000 — 394.90

Measurements within scale drawings are in mm.

Technical specifications and units of measure are subject to change.



Single lever basin mixer 260 with loop handle for washbowls with push-open waste set

- consists of: single lever basin mixer, waste set
- ComfortZone 260
- projection 204 mm
- normal spray
- flow rate at 3 bar: 5 l/min
- ceramic cartridge
- temperature limitation adjustable
- suitable for continuous flow water heaters
- push-open waste set G 1¼
- material waste set: metal
- connection type: G ⅜ connections
- connection dimension: DN15

finish	code no.	Euro
Chrome	74512000	405.60

Air Power · Eco Smart · Quick Clean · Comfort Zone

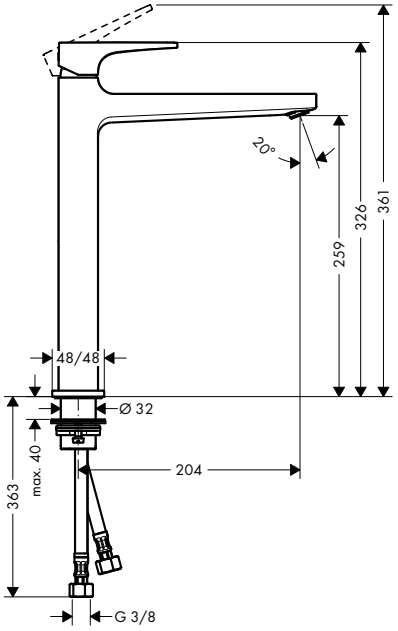



Single lever basin mixer for concealed installation wall-mounted with lever handle and spout 22.5 cm

- consists of: single lever basin mixer for concealed installation wall-mounted, waste set
- projection 225 mm
- normal spray
- flow rate at 3 bar: 5 l/min
- ceramic cartridge
- temperature limitation adjustable
- suitable for continuous flow water heaters
- non-closing waste set
- material waste set: metal
- connection type: basic set
- connection dimension: DN15
- handle can be positioned on the right or left, depends on the basic set installation

Chrome	32526000	341.60
Brushed Bronze	32526140	512.40
Brushed Black	32526340	512.40
Chrome Matt Black	32526670	478.20
Matt White	32526700	478.20
Polished Gold Optic	32526990	512.40

Air Power · Eco Smart · Quick Clean

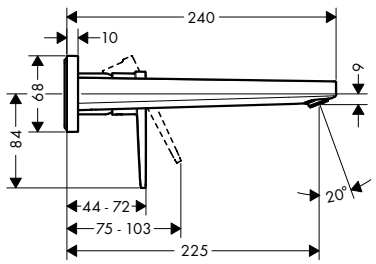

Alternative sizes:

- Single lever basin mixer for concealed installation wall-mounted with lever handle and spout 16.5 cm

Chrome	32525000	320.20

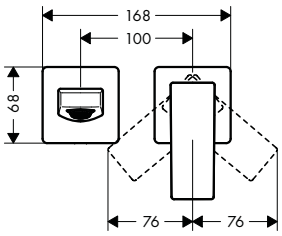

Required parts:

- Basic set for single lever basin mixer for concealed installation wall-mounted

	13622180	210.00

Measurements within scale drawings are in mm.

Technical specifications and units of measure are subject to change.

	finish	code no.	Euro



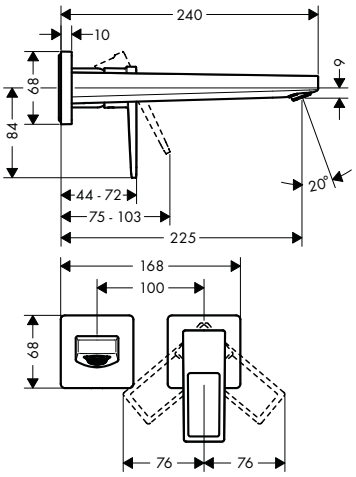

Single lever basin mixer for concealed installation wall-mounted with loop handle and spout 22.5 cm

Chrome — 74526000 — 363.00

Air Power · Eco Smart · Quick Clean

- consists of: single lever basin mixer for concealed installation wall-mounted, waste set
- projection 225 mm
- normal spray
- flow rate at 3 bar: 5 l/ min
- ceramic cartridge
- temperature limitation adjustable
- suitable for continuous flow water heaters
- non-closing waste set
- material waste set: metal
- connection type: basic set
- connection dimension: DN15
- handle can be positioned on the right or left, depends on the basic set installation

Alternative sizes:

- Single lever basin mixer for concealed installation wall-mounted with loop handle and spout 16.5 cm — Chrome — 74525000 — 341.60

Required parts:

- Basic set for single lever basin mixer for concealed installation wall-mounted — 13622180 — 210.00



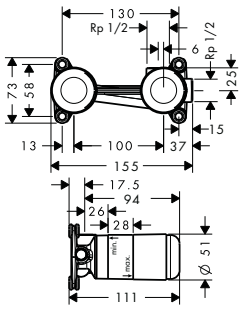

Basic set for single lever basin mixer for concealed installation wall-mounted

13622180 — 210.00

- variable positioning of the mixer system, can be left or right of the spout
- connection dimension: DN15

Optional parts:

- Extension set 2.5 cm — 31971000 — 105.40



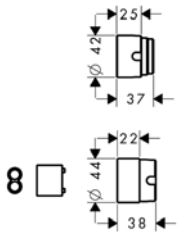

Extension set 2.5 cm

31971000 — 105.40

- extension length: 25 mm



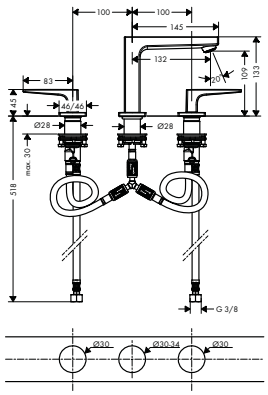

3-hole basin mixer 110 with lever handles and push-open waste set

Chrome — 32514000 — 357.60

Air Power · Eco Smart · Quick Clean · Comfort Zone

- consists of: 3-hole basin mixer, waste set
- ComfortZone 110
- projection 132 mm
- flow rate at 3 bar: 5 l/ min
- ceramic valves hot/ cold 90°
- suitable for continuous flow water heaters
- push-open waste set G 1¼
- material waste set: metal
- connection type: G ⅜ connections
- connection dimension: DN15

Measurements within scale drawings are in mm.

Technical specifications and units of measure are subject to change.

	finish	code no.	Euro
3-hole basin mixer 160 with lever handles and push-open waste set	Chrome	32515000	373.60
	Brushed Bronze	32515140	560.40
	Brushed Black	32515340	560.40
	Chrome Matt Black	32515670	523.00
	Matt White	32515700	523.00
	Polished Gold Optic	32515990	560.40

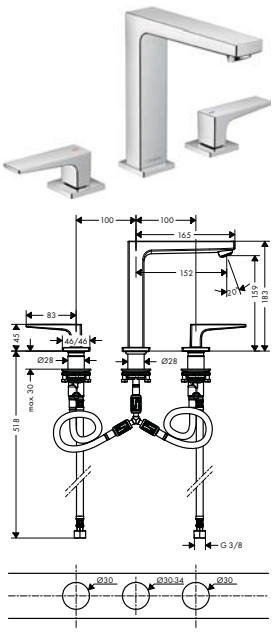

- consists of: 3-hole basin mixer, waste set
- ComfortZone 160
- projection 152 mm
- flow rate at 3 bar: 5 l/ min
- ceramic valves hot/ cold 90°
- suitable for continuous flow water heaters
- push-open waste set G 1¼
- material waste set: metal
- connection type: G ⅜ connections
- connection dimension: DN15

Air Power · Eco Smart · Quick Clean · Comfort Zone

3-hole basin mixer 110 with loop handles and push-open waste set	Chrome	74514000	379.00

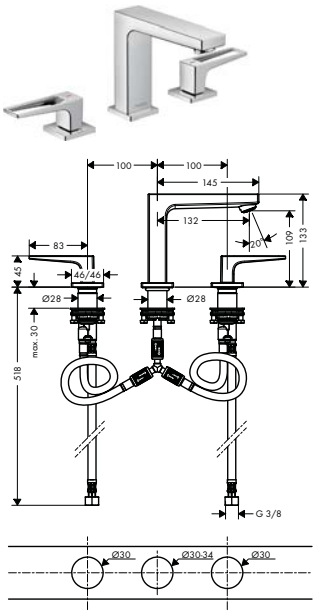

- consists of: 3-hole basin mixer, waste set
- ComfortZone 110
- projection 132 mm
- flow rate at 3 bar: 5 l/ min
- ceramic valves hot/ cold 90°
- suitable for continuous flow water heaters
- push-open waste set G 1¼
- material waste set: metal
- connection type: G ⅜ connections
- connection dimension: DN15

Air Power · Eco Smart · Quick Clean · Comfort Zone

3-hole basin mixer 160 with loop handles and push-open waste set	Chrome	74515000	394.90

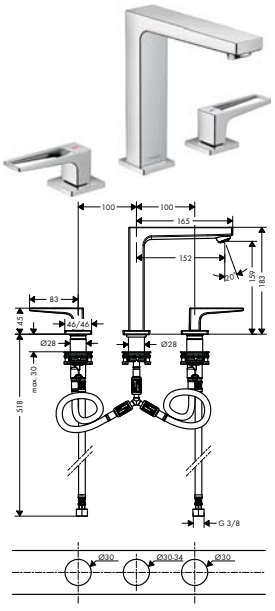

- consists of: 3-hole basin mixer, waste set
- ComfortZone 160
- projection 152 mm
- flow rate at 3 bar: 5 l/ min
- ceramic valves hot/ cold 90°
- suitable for continuous flow water heaters
- push-open waste set G 1¼
- material waste set: metal
- connection type: G ⅜ connections
- connection dimension: DN15

Air Power · Eco Smart · Quick Clean · Comfort Zone

Measurements within scale drawings are in mm.

Technical specifications and units of measure are subject to change.

	finish	code no.	Euro



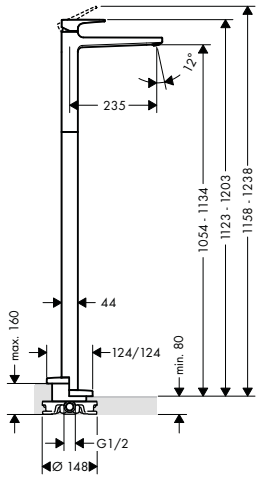

Single lever basin mixer floor-standing with lever handle without waste set

Chrome — 32530000 — 1,120.80

Air Power · Eco Smart · Quick Clean

- projection 235 mm
- normal spray
- flow rate at 3 bar: 5 l/min
- ceramic cartridge
- temperature limitation adjustable
- suitable for continuous flow water heaters
- connection type: basic set
- connection dimension: DN15

Required parts:

- Basic set for mixers floor-standing — 10452180 — 437.90

Optional parts:

- Sealing foil for basic set bath mixer floor-standing — 96441000 — 118.90



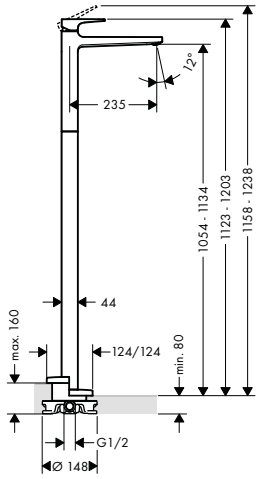

Single lever basin mixer floor-standing with loop handle without waste set

Chrome — 74530000 — 1,142.10

Air Power · Eco Smart · Quick Clean

- projection 235 mm
- normal spray
- flow rate at 3 bar: 5 l/min
- ceramic cartridge
- temperature limitation adjustable
- suitable for continuous flow water heaters
- connection type: basic set
- connection dimension: DN15

Required parts:

- Basic set for mixers floor-standing — 10452180 — 437.90

Optional parts:

- Sealing foil for basic set bath mixer floor-standing — 96441000 — 118.90



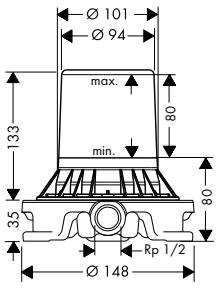

Basic set for mixers floor-standing

10452180 — 437.90

- for mounting on unfinished floor
- suitable for single lever bath mixer, single lever basin mixer and bath spout floor-standing
- connection dimension: DN15

Optional parts:

- Sealing foil for basic set bath mixer floor-standing — 96441000 — 118.90



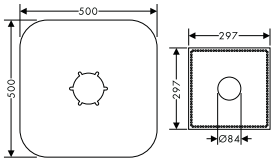

Sealing foil for basic set bath mixer floor-standing

96441000 — 118.90

Measurements within scale drawings are in mm.

Technical specifications and units of measure are subject to change.

Bidet

	finish	code no.	Euro
Single lever bidet mixer with lever handle and push-open waste set			
· consists of: single lever bidet mixer, waste set · projection 129 mm · ball-pivot joint · laminar spray · flow rate at 3 bar: 7.2 l/min · ceramic cartridge · temperature limitation adjustable · suitable for continous flow water heaters · material waste set: metal · connection dimension: DN15	Chrome	32520000	352.30
	Brushed Bronze	32520140	528.50
	Brushed Black Chrome	32520340	528.50
	Matt Black	32520670	493.20
	Matt White	32520700	493.20
	Polished Gold Optic	32520990	528.50
			Air Power

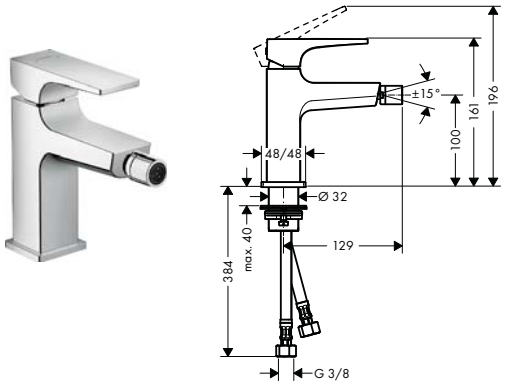

	finish	code no.	Euro
Single lever bidet mixer with loop handle and push-open waste set			
· consists of: single lever bidet mixer, waste set · projection 129 mm · ball-pivot joint · laminar spray · flow rate at 3 bar: 7.2 l/min · ceramic cartridge · temperature limitation adjustable · suitable for continous flow water heaters · material waste set: metal · connection dimension: DN15	Chrome	74520000	373.60
			Air Power

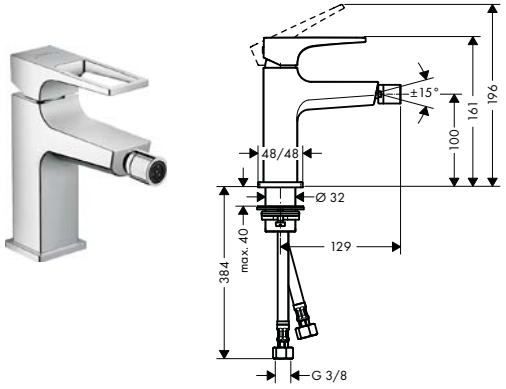

	finish	code no.	Euro
Single lever basin mixer with lever handle with bidette hand shower and shower hose 160 cm			
· consists of: single lever basin mixer, bidette hand shower, shower holder, shower hose, waste set · ComfortZone 110 · projection 135 mm · flow rate at 3 bar: 5 l/min · ceramic cartridge · temperature limitation adjustable · suitable for continuous flow water heaters · push-open waste set G 1¼ · material waste set: metal · connection type: G ⅜ connections · connection dimension: DN15	Chrome	32522000	357.60
			Air Power, Eco Smart, Quick Clean, Comfort Zone



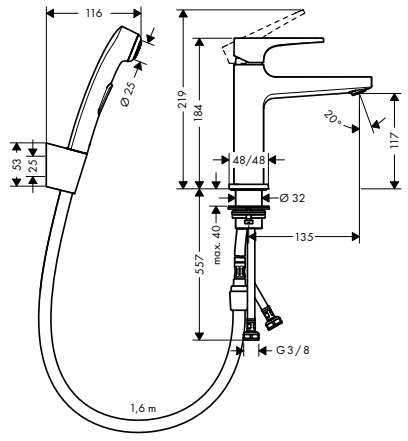

Measurements within scale drawings are in mm.

Technical specifications and units of measure are subject to change.

	finish	code no.	Euro
Single lever basin mixer with loop handle with bidette hand shower and shower hose 160 cm	Chrome	74522000	379.00



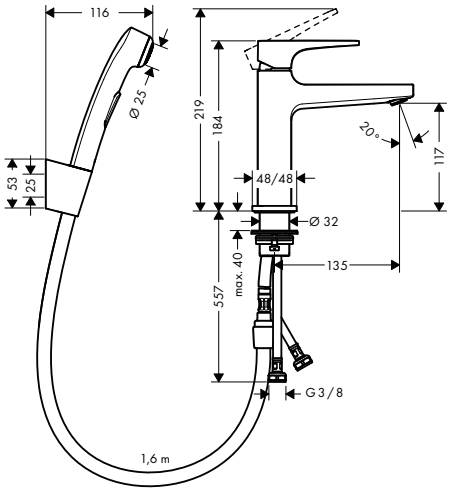

- consists of: single lever basin mixer, bidette hand shower, shower holder, shower hose, waste set
- ComfortZone 110
- projection 135 mm
- flow rate at 3 bar: 5 l/min
- ceramic cartridge
- temperature limitation adjustable
- suitable for continuous flow water heaters
- push-open waste set G 1¼
- material waste set: metal
- connection type: G ⅜ connections
- connection dimension: DN15

Bath



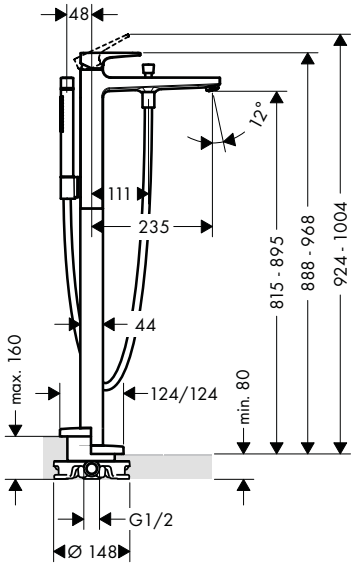

	finish	code no.	Euro
Single lever bath mixer floor-standing with lever handle	Chrome	32532000	1,654.50
	Brushed Bronze	32532140	2,481.80
	Brushed Black	32532340	2,481.80
	Chrome Matt Black	32532670	2,316.30
	Matt White	32532700	2,316.30
	Polished Gold Optic	32532990	2,481.80

- consists of: single lever bath mixer floor standing, baton hand shower, shower hose, shower holder
- projection 235 mm
- connection type: basic set
- spray type mixer: normal spray
- spray type hand shower: Rain, MonoRain
- flow rate at 3 bar: 18 l/min
- ceramic cartridge
- min. operating pressure: 1 bar
- max. operating pressure: 10 bar
- temperature limitation adjustable
- diverter with automatic resetting
- non-return valve
- connection dimension: DN15

Consisting of:
- Shower hose 125 cm (# 28272XXX)

Required parts:

· Basic set for mixers floor-standing	10452180	437.90

Optional parts:

· Sealing foil for basic set bath mixer floor-standing	96441000	118.90

Measurements within scale drawings are in mm.

Technical specifications and units of measure are subject to change.

	finish	code no.	Euro



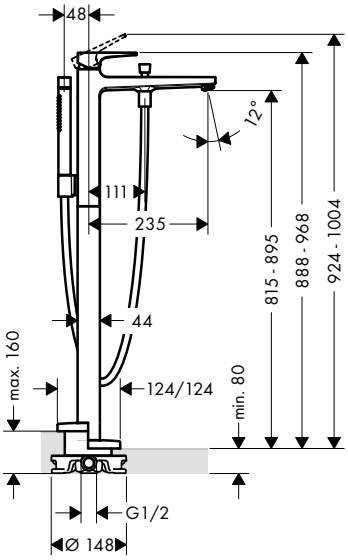

Single lever bath mixer floor-standing with loop handle

Chrome	74532000	1,675.80

Air Power · Quick Clean

- consists of: single lever bath mixer floor standing, baton hand shower, shower hose, shower holder
- projection 235 mm
- connection type: basic set
- spray type mixer: normal spray
- spray type hand shower: Rain, MonoRain
- flow rate at 3 bar: 21 l/min
- ceramic cartridge
- min. operating pressure: 1 bar
- max. operating pressure: 10 bar
- temperature limitation adjustable
- diverter with automatic resetting
- non-return valve
- connection dimension: DN15

Consisting of:
- Shower hose 125 cm (# 28272XXX)

Required parts:

· Basic set for mixers floor-standing	10452180	437.90

Optional parts:

· Sealing foil for basic set bath mixer floor-standing	96441000	118.90



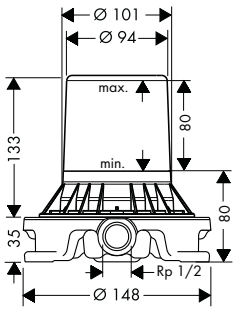

Basic set for mixers floor-standing

10452180 437.90

- for mounting on unfinished floor
- suitable for single lever bath mixer, single lever basin mixer and bath spout floor-standing
- connection dimension: DN15

Optional parts:

· Sealing foil for basic set bath mixer floor-standing	96441000	118.90



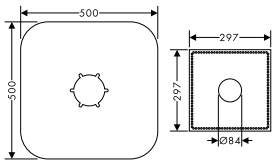

Sealing foil for basic set bath mixer floor-standing

96441000 118.90



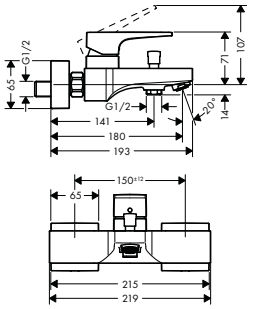

Single lever bath mixer for exposed installation with lever handle

Chrome	32540000	331.00
Brushed Bronze	32540140	496.50
Brushed Black	32540340	496.50
Chrome Matt Black	32540670	463.40
Matt White	32540700	463.40
Polished Gold Optic	32540990	496.50

Air Power · Quick Clean

- projection 180 mm
- connection type: s-shaped connections
- centre distance: 150 ± 12 mm
- spray type mixer: normal spray
- flow rate at 3 bar: 22 l/min
- ceramic cartridge
- min. operating pressure: 1 bar
- max. operating pressure: 10 bar
- temperature limitation adjustable
- diverter with automatic resetting
- intrinsically safe against backflow
- suitable for continous flow water heaters
- connection dimension: DN15

Measurements within scale drawings are in mm.

Technical specifications and units of measure are subject to change.

	finish	code no.	Euro



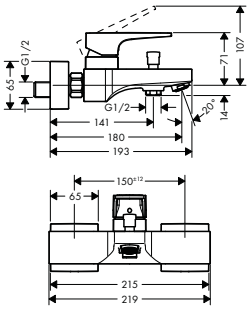

Single lever bath mixer for exposed installation with loop handle

Chrome 74540000 352.30

Air Power · Quick Clean

- projection 180 mm
- connection type: s-shaped connections
- centre distance: 150 ± 12 mm
- spray type mixer: normal spray
- flow rate at 3 bar: 22 l/min
- ceramic cartridge
- min. operating pressure: 1 bar
- max. operating pressure: 10 bar
- temperature limitation adjustable
- diverter with automatic resetting
- intrinsically safe against backflow
- with silencer
- suitable for continous flow water heaters
- connection dimension: DN15



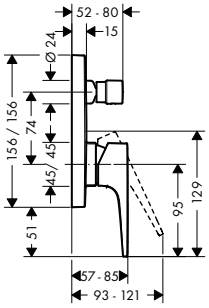

Single lever bath mixer for concealed installation with lever handle

	Chrome	32545000	224.20
	Brushed Bronze	32545140	336.30
	Brushed Black	32545340	336.30
	Chrome Matt Black	32545670	313.90
	Matt White	32545700	313.90
	Polished Gold Optic	32545990	336.30

- connection type: basic set
- ceramic cartridge
- min. operating pressure: 1 bar
- max. operating pressure: 10 bar
- temperature limitation adjustable
- diverter with automatic resetting
- non-return valve
- with silencer

Alternative products:

- Single lever bath mixer for concealed installation with lever handle and integrated security combination according to EN1717

Chrome	32546000	320.20
Brushed Bronze	32546140	480.30
Brushed Black	32546340	480.30
Chrome Matt Black	32546670	448.30
Matt White	32546700	448.30
Polished Gold Optic	32546990	480.30

Required parts:

- Basic set iBox universal — 01800180 — 130.80

Optional parts:

- Extension element — Chrome — 13593000 — 43.70



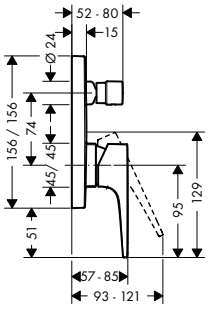

Single lever bath mixer for concealed installation with loop handle

Chrome 74545000 245.60

- connection type: basic set
- ceramic cartridge
- min. operating pressure: 1 bar
- max. operating pressure: 10 bar
- temperature limitation adjustable
- diverter with automatic resetting
- non-return valve
- with silencer

Alternative products:

- Single lever bath mixer for concealed installation with loop handle and integrated security combination according to EN1717 — Chrome — 74546000 — 341.60

Required parts:

- Basic set iBox universal — 01800180 — 130.80

Optional parts:

- Extension element — Chrome — 13593000 — 43.70

Measurements within scale drawings are in mm.

Technical specifications and units of measure are subject to change.

	finish	code no.	Euro
Basic set iBox universal · suitable for all shower, bath tub and thermostat finish sets for concealed installation · connection thread · Rp ¾ · rotationally-symmetric installation · sound-decoupled installation · connection dimension: DN20		01800180	130.80
Alternative products:			
· Basic set iBox universal with shut-off unit		01850180	169.90
Optional parts:			
· Extension iBox universal basic set 2.5 cm		13595000	47.10
· Fastening rail set for iBox universal		96615000	33.40
· Assembly aid for iBox universal		93500000	12.20
Extension element · for installation between tiles and finish set · suitable for all shower and bath tub finish sets Ø 150 mm · diameter: 157 mm · extension length: 22 mm	Chrome	13593000	43.70
Bath spout floor-standing · connection type: basic set · projection 235 mm · free-standing installation · flow rate: 20 l/min · spray type: normal spray	Chrome	32531000	854.00
Required parts:			
· Basic set for mixers floor-standing		10452180	437.90
Optional parts:			
· Sealing foil for basic set bath mixer floor-standing		96441000	118.90
Basic set for mixers floor-standing · for mounting on unfinished floor · suitable for single lever bath mixer, single lever basin mixer and bath spout floor-standing · connection dimension: DN15		10452180	437.90
Optional parts:			
· Sealing foil for basic set bath mixer floor-standing		96441000	118.90
Sealing foil for basic set bath mixer floor-standing		96441000	118.90

Measurements within scale drawings are in mm.

Technical specifications and units of measure are subject to change.

	finish	code no.	Euro



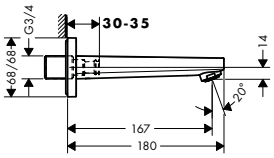

Bath spout

- connection type: G ¾
- projection 167.5 mm
- wall-mounted
- flow rate: 20 l/ min
- spray type: normal spray

Chrome 32542000 213.40

Air Power Quick Clean



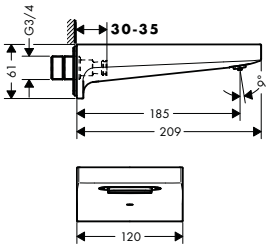

Bath spout

- projection 185 mm
- wall-mounted
- flow rate: 28 l/ min
- spray type: wide flood jet

Chrome	32543000	320.20
Brushed Bronze	32543140	480.30
Brushed Black	32543340	480.30
Chrome Matt Black	32543670	448.30
Matt White	32543700	448.30
Polished Gold Optic	32543990	480.30

Air Power Quick Clean



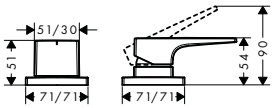

2-hole rim mounted single lever bath mixer with lever handle

- connection type: basic set
- ceramic cartridge
- min. operating pressure: 1 bar
- max. operating pressure: 10 bar
- temperature limitation adjustable
- connection dimension: DN15

Chrome 32548000 266.90

Required parts:

- Basic set for 2-hole rim mounted bath mixer

13159180 200.00



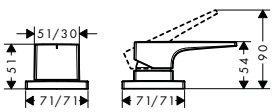

2-hole rim mounted single lever bath mixer with loop handle

- connection type: basic set
- ceramic cartridge
- min. operating pressure: 1 bar
- max. operating pressure: 10 bar
- temperature limitation adjustable
- connection dimension: DN15

Chrome 74548000 288.20

Required parts:

- Basic set for 2-hole rim mounted bath mixer

13159180 200.00

Measurements within scale drawings are in mm.

Technical specifications and units of measure are subject to change.

	finish	code no.	Euro



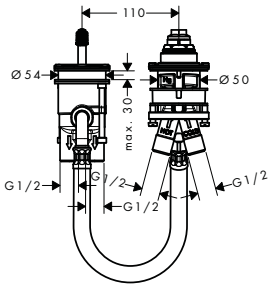

Basic set for 2-hole rim mounted bath mixer

13159180 — 200.00

- suitable for remote spout
- connection thread: G ½
- connection dimension: DN15
- ceramic cartridge

Optional parts:

· Flexible connection tube 80 cm		58192000	104.50
· Connection tube set for 2-hole rim mounted thermostatic bath mixer		96387000	52.00
· Rim mounted bath set with hand shower	Chrome	19418000	410.70



3-hole rim mounted single lever bath mixer with lever handle and Secuflex

Chrome — 32550000 — 640.40

Air Power — Quick Clean

- consists of: 3-hole rim mounted single lever bath mixer, hand shower, shower holder
- projection 197 mm
- connection type: basic set
- spray type mixer: normal spray
- spray type hand shower: Rain, RainAir, Whirl
- maximum pull-out length of hand shower: 1.10 m
- flow rate at 3 bar: 22 l/ min
- ceramic cartridge
- min. operating pressure: 1 bar
- max. operating pressure: 10 bar
- temperature limitation adjustable
- connection dimension: DN15

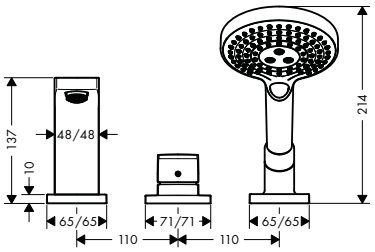

Consisting of:

- Hand shower 120 3jet (# 26530XXX)

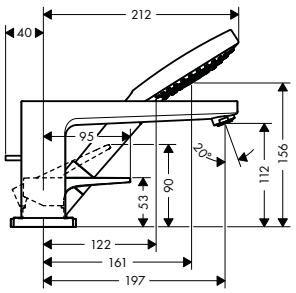

Required parts:

· Basic set for 3-hole rim mounted single lever bath mixer		13437180	653.90

Measurements within scale drawings are in mm.

Technical specifications and units of measure are subject to change.

	finish	code no.	Euro



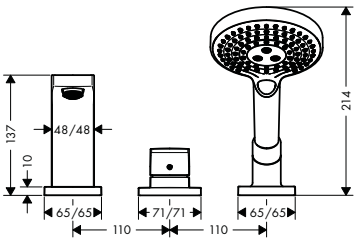

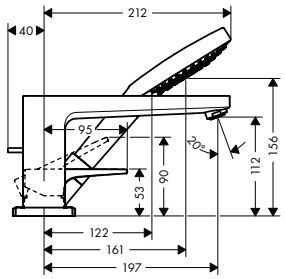

3-hole rim mounted single lever bath mixer with loop handle and Secuflex

Chrome | 74550000 | 661.80

Air Power | Quick Clean

- consists of: 3-hole rim mounted single lever bath mixer, hand shower, shower holder
- projection 197 mm
- connection type: basic set
- spray type mixer: normal spray
- spray type hand shower: Rain, RainAir, Whirl
- maximum pull-out length of hand shower: 1.10 m
- flow rate at 3 bar: 22 l/ min
- ceramic cartridge
- min. operating pressure: 1 bar
- max. operating pressure: 10 bar
- temperature limitation adjustable
- connection dimension: DN15

Consisting of:

- Hand shower 120 3jet (# 26530XXX)

Required parts:

- Basic set for 3-hole rim mounted single lever bath mixer — 13437180 | 653.90



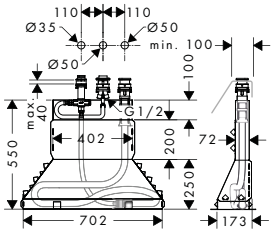

Basic set for 3-hole rim mounted single lever bath mixer

13437180 | 653.90

- consists of: basic set, shower hose, Secubox
- maximum pull-out length of hand shower: 1.10 m
- connection thread: G ½
- connection dimension: DN15

Optional parts:

- Secuflex insert extension — 98806000 | 3.80



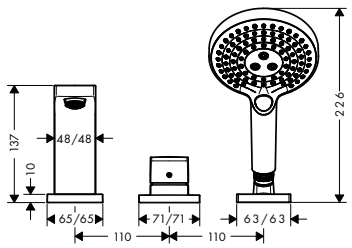

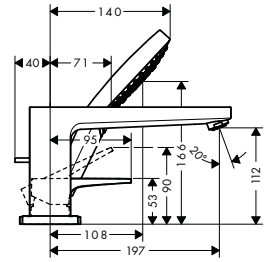

3-hole rim mounted single lever bath mixer with lever handle

Chrome | 32551000 | 480.40

Air Power | Quick Clean

- consists of: 3-hole rim mounted single lever bath mixer, hand shower, shower holder
- projection 197 mm
- connection type: basic set
- spray type mixer: normal spray
- spray type hand shower: Rain, RainAir, Whirl
- maximum pull-out length of hand shower: 1.60 m
- flow rate at 3 bar: 22 l/ min
- ceramic valves hot/ cold 180°
- min. operating pressure: 1 bar
- max. operating pressure: 10 bar
- temperature limitation adjustable
- connection dimension: DN15

Consisting of:

- Hand shower 120 3jet (# 26530XXX)

Required parts:

- Basic set for 3-hole rim mounted single lever bath mixer — 13439180 | 333.40

Measurements within scale drawings are in mm.

Technical specifications and units of measure are subject to change.

	finish	code no.	Euro



3-hole rim mounted single lever bath mixer with loop handle

Chrome | 74551000 | 501.60

Air Power | Quick Clean

- consists of: 3-hole rim mounted single lever bath mixer, hand shower, shower holder, shower hose
- projection 197 mm
- connection type: basic set
- spray type mixer: normal spray
- spray type hand shower: Rain, RainAir, Whirl
- maximum pull-out length of hand shower: 1.60 m
- flow rate at 3 bar: 22 l/ min
- ceramic cartridge
- min. operating pressure: 1 bar
- max. operating pressure: 10 bar
- temperature limitation adjustable
- connection dimension: DN15

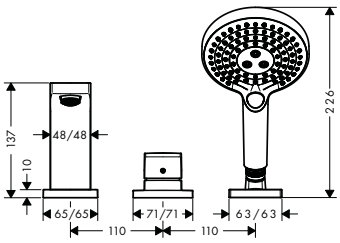

Consisting of:
- Hand shower 120 3jet (# 26530XXX)

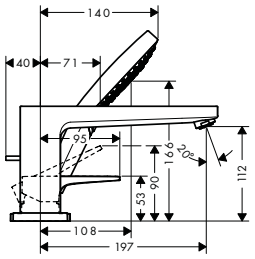

Required parts:
- Basic set for 3-hole rim mounted single lever bath mixer — 13439180 | 333.40

Basic set for 3-hole rim mounted single lever bath mixer

13439180 | 333.40

- consists of: basic set, shower holder, shower hose
- maximum pull-out length of hand shower: 1.60 m
- maintenance opening required
- connection dimension: G ½
- ceramic cartridge

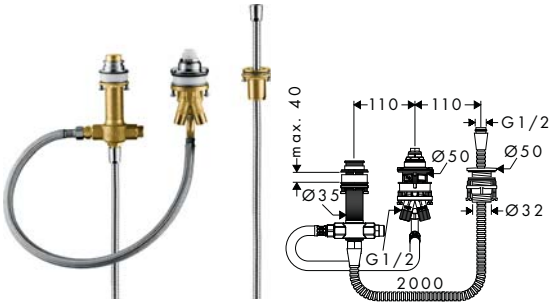

4-hole rim mounted bath mixer with lever handles and Secuflex

Chrome | 32552000 | 640.40

Air Power | Quick Clean

- consists of: 4-hole rim mounted bath mixer, hand shower, shower holder
- projection 197 mm
- connection type: basic set
- spray type mixer: normal spray
- spray type hand shower: Rain, RainAir, Whirl
- maximum pull-out length of hand shower: 1.10 m
- flow rate at 3 bar: 22 l/ min
- ceramic valves hot/ cold 90°
- min. operating pressure: 1 bar
- max. operating pressure: 10 bar
- connection dimension: DN15



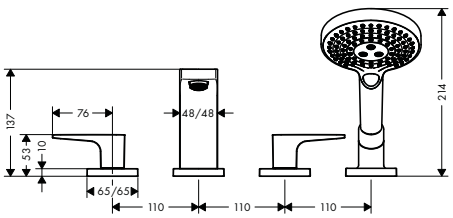

Consisting of:
- Hand shower 120 3jet (# 26530XXX)

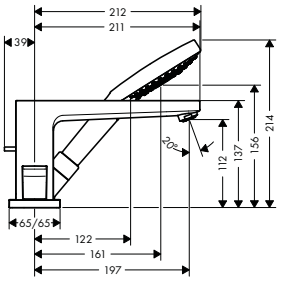

Required parts:
- Basic set for 4-hole rim mounted bath mixer — 13444180 | 798.10

Measurements within scale drawings are in mm.

Technical specifications and units of measure are subject to change.

	finish	code no.	Euro



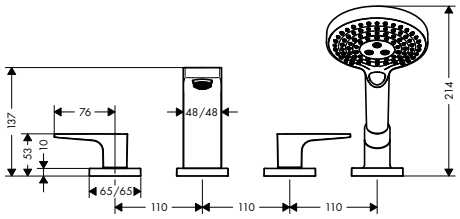

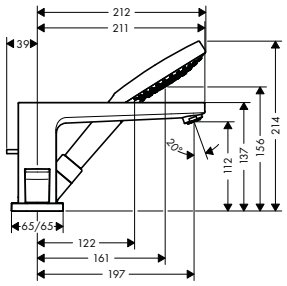

4-hole rim mounted bath mixer with loop handles and Secuflex

Chrome — 74552000 — 661.80

Air Power · Quick Clean

- consists of: 4-hole rim mounted bath mixer, hand shower, shower holder
- projection 197 mm
- connection type: basic set
- spray type mixer: normal spray
- spray type hand shower: Rain, RainAir, Whirl
- maximum pull-out length of hand shower: 1.10 m
- flow rate at 3 bar: 22 l/min
- ceramic valves hot/ cold 90°
- min. operating pressure: 1 bar
- max. operating pressure: 10 bar
- connection dimension: DN15

Consisting of:
- Hand shower 120 3jet (# 26530XXX)

Required parts:
- Basic set for 4-hole rim mounted bath mixer — 13444180 — 798.10



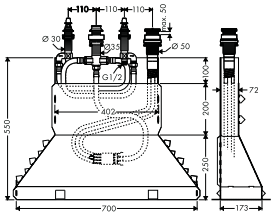

Basic set for 4-hole rim mounted bath mixer

13444180 — 798.10

- consists of: basic set, shower hose, Secubox
- maximum pull-out length of hand shower: 1.10 m
- connection dimension: DN15

Optional parts:
- Secuflex insert extension — 98806000 — 3.80



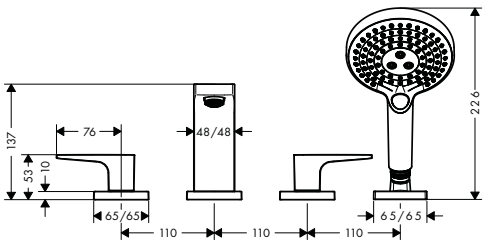

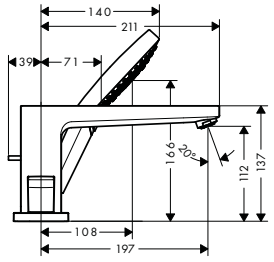

4-hole rim mounted bath mixer with lever handles

Chrome — 32553000 — 480.40

Air Power · Quick Clean

- consists of: 4-hole rim mounted bath mixer, hand shower, shower holder
- projection 197 mm
- connection type: basic set
- spray type mixer: normal spray
- spray type hand shower: Rain, RainAir, Whirl
- maximum pull-out length of hand shower: 1.60 m
- flow rate at 3 bar: 22 l/min
- ceramic valves hot/ cold 90°
- min. operating pressure: 1 bar
- max. operating pressure: 10 bar
- connection dimension: DN15

Consisting of:
- Hand shower 120 3jet (# 26530XXX)

Required parts:
- Basic set for 4-hole rim mounted bath mixer — 13244180 — 275.20

Measurements within scale drawings are in mm.

Technical specifications and units of measure are subject to change.

	finish	code no.	Euro



4-hole rim mounted bath mixer with loop handles

Chrome 74553000 501.60

Air Power · Quick Clean

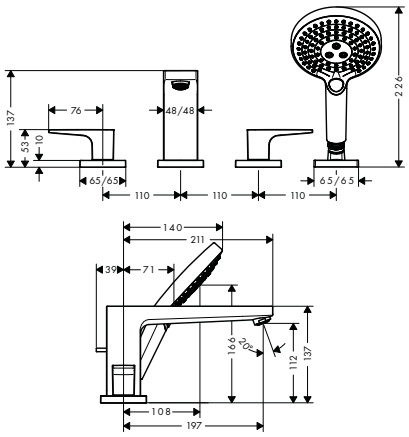

- consists of: 4-hole rim mounted bath mixer, hand shower, shower holder
- projection 197 mm
- connection type: basic set
- spray type mixer: normal spray
- spray type hand shower: Rain, RainAir, Whirl
- maximum pull-out length of hand shower: 1.60 m
- flow rate at 3 bar: 22 l/ min
- ceramic valves hot/ cold 90°
- min. operating pressure: 1 bar
- max. operating pressure: 10 bar
- connection dimension: DN15

Consisting of:

- Hand shower 120 3jet (# 26530XXX)

Required parts:

- Basic set for 4-hole rim mounted bath mixer — 13244180 — 275.20



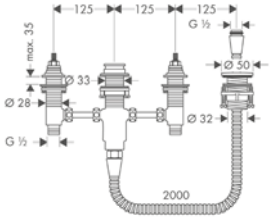

Basic set for 4-hole rim mounted bath mixer

13244180 275.20

- consists of: basic set, shower holder, shower hose
- maximum pull-out length of hand shower: 1.60 m
- maintenance opening required
- suitable for 4-hole rim mounted bath mixer
- connection thread: G ½
- connection dimension: DN15
- ceramic valves hot/ cold 90°

Shower



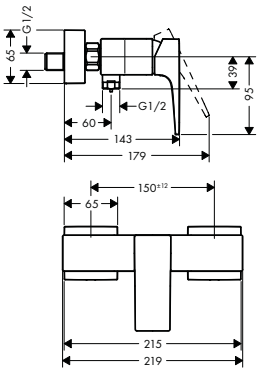

Single lever shower mixer for exposed installation with lever handle

Chrome	32560000	224.20
Brushed Bronze	32560140	336.30
Brushed Black	32560340	336.30
Chrome Matt Black	32560670	313.90
Matt White	32560700	313.90
Polished Gold Optic	32560990	336.30

- connection type: s-shaped connections
- centre distance: 150 ± 12 mm
- flow rate at 3 bar: 22 l/ min
- ceramic cartridge
- min. operating pressure: 1 bar
- max. operating pressure: 10 bar
- temperature limitation adjustable
- non-return valve
- with silencer
- hose connection DN15
- connection dimension: DN15



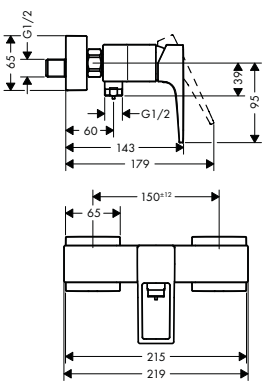

Single lever shower mixer for exposed installation with loop handle

Chrome 74560000 245.60

- connection type: s-shaped connections
- centre distance: 150 ± 12 mm
- flow rate at 3 bar: 22 l/ min
- ceramic cartridge
- min. operating pressure: 1 bar
- max. operating pressure: 10 bar
- temperature limitation adjustable
- non-return valve
- with silencer
- hose connection DN15
- connection dimension: DN15

Measurements within scale drawings are in mm.

Technical specifications and units of measure are subject to change.

	finish	code no.	Euro
Single lever shower mixer for concealed installation with lever handle	Chrome	32565000	208.20
	Brushed Bronze	32565140	312.30
	Brushed Black Chrome	32565340	312.30
	Matt Black	32565670	291.50
	Matt White	32565700	291.50
	Polished Gold Optic	32565990	312.30
· 1 function · connection type: basic set · flow rate at 3 bar: 29.3 l/min · ceramic cartridge · min. operating pressure: 1 bar · max. operating pressure: 10 bar · temperature limitation adjustable · with silencer			
Required parts:			
· Basic set iBox universal		01800180	130.80
Optional parts:			
· Extension element	Chrome	13593000	43.70
Single lever shower mixer for concealed installation with loop handle	Chrome	74565000	229.40
· connection type: basic set · flow rate at 3 bar: 29.3 l/min · ceramic cartridge · min. operating pressure: 1 bar · max. operating pressure: 10 bar · temperature limitation adjustable · with silencer			
Required parts:			
· Basic set iBox universal		01800180	130.80
Optional parts:			
· Extension element	Chrome	13593000	43.70
Basic set iBox universal		01800180	130.80
· suitable for all shower, bath tub and thermostat finish sets for concealed installation · connection thread · Rp ¾ · rotationally-symmetric installation · sound-decoupled installation · connection dimension: DN20			
Alternative products:			
· Basic set iBox universal with shut-off unit		01850180	169.90
Optional parts:			
· Extension iBox universal basic set 2.5 cm		13595000	47.10
· Fastening rail set for iBox universal		96615000	33.40
· Assembly aid for iBox universal		93500000	12.20
Extension element	Chrome	13593000	43.70
· for installation between tiles and finish set · suitable for all shower and bath tub finish sets Ø 150 mm · diameter: 157 mm · extension length: 22 mm			

Measurements within scale drawings are in mm.

Possible combinations Metropol Classic

Basin


31303000, -090


31302000, -090


31300000, -090*


31330000, -090


31306000, -090


31331000, -090


31307000, -090

Bath


31340000, -090


31345000, -090


31441000, -090


31449000, -090


31445000, -090

Shower


31360000, -090


31365000, -090


28548000, -090


27424000, -090

Accessories


no.01800180

* as an example

Basin



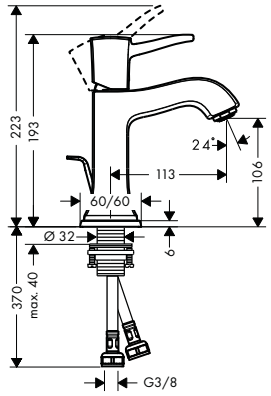

Single lever basin mixer 110 with lever handle and pop-up waste set

- consists of: single lever basin mixer, waste set
- ComfortZone 110
- projection 113 mm
- normal spray
- flow rate at 3 bar: 5 l/min
- ceramic cartridge
- temperature limitation adjustable
- suitable for continuous flow water heaters
- pop-up waste set G 1¼
- material waste set: metal
- connection type: G ⅜ connections
- connection dimension: DN15

finish	code no.	Euro
Chrome	31300000	352.50
Chrome/Gold Optic	31300090	440.70

Alternative products:

- Single lever basin mixer 110 with lever handle without waste set

finish	code no.	Euro
Chrome	31301000	352.50
Chrome/Gold Optic	31301090	440.70



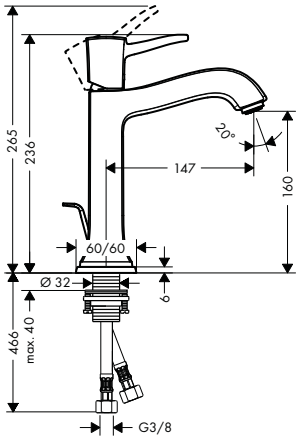

Single lever basin mixer 160 with lever handle for washbowls with pop-up waste set

- consists of: single lever basin mixer, waste set
- ComfortZone 160
- projection 147 mm
- normal spray
- flow rate at 3 bar: 5 l/min
- ceramic cartridge
- temperature limitation adjustable
- suitable for continuous flow water heaters
- pop-up waste set G 1¼
- material waste set: metal
- connection type: G ⅜ connections
- connection dimension: DN15

finish	code no.	Euro
Chrome	31302000	374.60
Chrome/Gold Optic	31302090	468.10



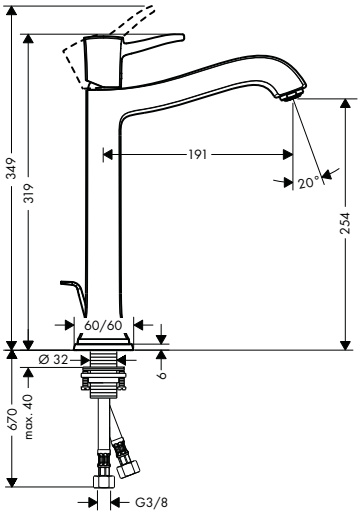

Single lever basin mixer 260 with lever handle for washbowls with pop-up waste set

- consists of: single lever basin mixer, waste set
- ComfortZone 260
- projection 191 mm
- normal spray
- flow rate at 3 bar: 5 l/min
- ceramic cartridge
- temperature limitation adjustable
- suitable for continuous flow water heaters
- pop-up waste set G 1¼
- material waste set: metal
- connection type: G ⅜ connections
- connection dimension: DN15

finish	code no.	Euro
Chrome	31303000	440.70
Chrome/Gold Optic	31303090	550.80

Measurements within scale drawings are in mm.

	finish	code no.	Euro
3-hole basin mixer 110 with lever handles and pop-up waste set	Chrome	31330000	484.70
	Chrome/Gold Optic	31330090	605.90



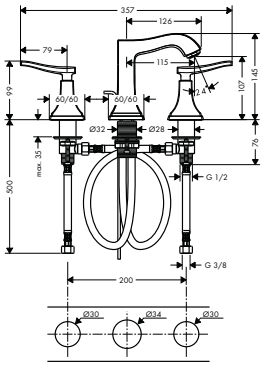

- consists of: 3-hole basin mixer, waste set
- ComfortZone 110
- projection 115 mm
- normal spray
- flow rate at 3 bar: 5 l/ min
- ceramic valves hot/ cold 90°
- temperature limitation adjustable
- suitable for continuous flow water heaters
- pop-up waste set G 1¼
- material waste set: metal
- connection type: G ⅜ connections
- connection dimension: DN15

3-hole basin mixer 160 with lever handles and pop-up waste set	Chrome	31331000	506.70
	Chrome/Gold Optic	31331090	633.40



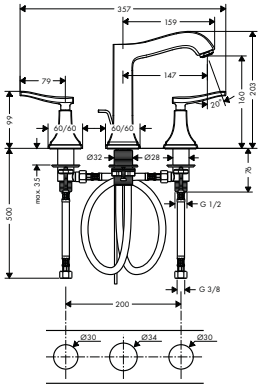

- consists of: 3-hole basin mixer, waste set
- ComfortZone 160
- projection 147 mm
- normal spray
- flow rate at 3 bar: 5 l/ min
- ceramic valves hot/ cold 90°
- temperature limitation adjustable
- suitable for continuous flow water heaters
- pop-up waste set G 1¼
- material waste set: metal
- connection type: G ⅜ connections
- connection dimension: DN15

3-hole basin mixer 110 with cross handles and pop-up waste set	Chrome	31306000	528.80
	Chrome/Gold Optic	31306090	661.00



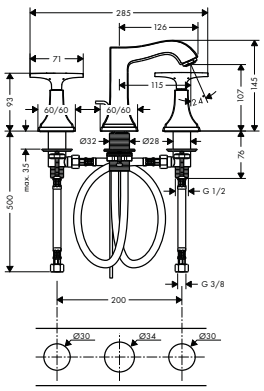

- consists of: 3-hole basin mixer, waste set
- ComfortZone 110
- projection 115 mm
- normal spray
- flow rate at 3 bar: 5 l/ min
- ceramic valves hot/ cold 90°
- temperature limitation adjustable
- suitable for continuous flow water heaters
- pop-up waste set G 1¼
- material waste set: metal
- connection type: G ⅜ connections
- connection dimension: DN15

3-hole basin mixer 160 with cross handles and pop-up waste set	Chrome	31307000	550.80
	Chrome/Gold Optic	31307090	688.40



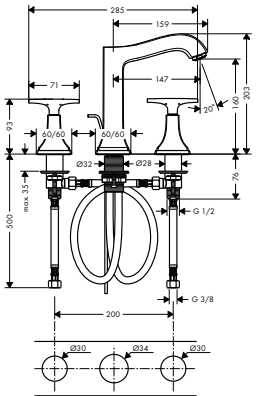

- consists of: 3-hole basin mixer, waste set
- ComfortZone 160
- projection 147 mm
- normal spray
- flow rate at 3 bar: 5 l/ min
- ceramic valves hot/ cold 90°
- temperature limitation adjustable
- suitable for continuous flow water heaters
- pop-up waste set G 1¼
- material waste set: metal
- connection type: G ⅜ connections
- connection dimension: DN15

Measurements within scale drawings are in mm.

Technical specifications and units of measure are subject to change.

Bidet

	finish	code no.	Euro
Single lever bidet mixer with lever handle and pop-up waste set	Chrome	31320000	385.60
	Chrome/Gold Optic	31320090	484.70

Air Power · Eco Smart · Quick Clean



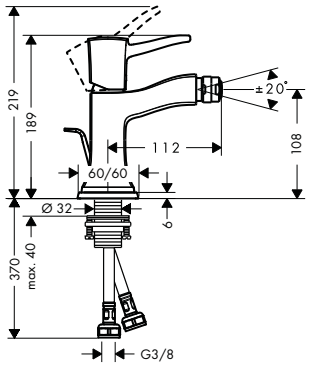

- consists of: single lever bidet mixer, waste set
- projection 112 mm
- aerator with ball pivot
- normal spray
- flow rate at 3 bar: 5 l/ min
- ceramic cartridge
- temperature limitation adjustable
- suitable for continous flow water heaters
- material waste set: metal
- connection dimension: DN15

Bath

Single lever bath mixer floor-standing with lever handle	Chrome	31445000	1,817.60
	Chrome/Gold Optic	31445090	2,313.30

Air Power · Quick Clean



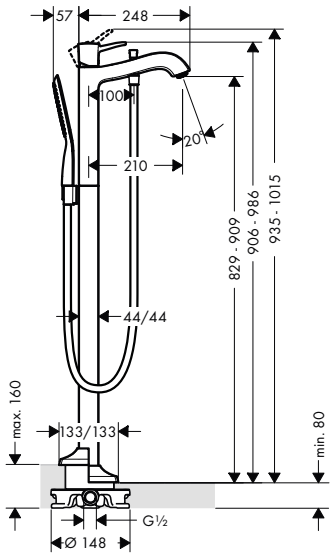

- consists of: single lever bath mixer floor standing, baton hand shower, shower hose, shower holder
- projection 210 mm
- connection type: basic set
- spray type mixer: normal spray
- spray type hand shower: RainAir
- flow rate at 3 bar: 20 l/ min
- ceramic cartridge
- min. operating pressure: 1 bar
- max. operating pressure: 10 bar
- temperature limitation adjustable
- diverter with automatic resetting
- intrinsically safe against backflow
- connection dimension: DN15

Consisting of:

- Baton hand shower 120 1jet (# 28558XXX)
- Shower hose 125 cm (# 28272XXX)

Required parts:

· Basic set for mixers floor-standing	10452180	437.90
· Sealing foil for basic set bath mixer floor-standing	96441000	118.90

Basic set for mixers floor-standing

	10452180	437.90



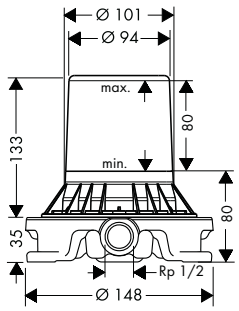

- for mounting on unfinished floor
- suitable for single lever bath mixer, single lever basin mixer and bath spout floor-standing
- connection dimension: DN15

Optional parts:

· Sealing foil for basic set bath mixer floor-standing	96441000	118.90

Sealing foil for basic set bath mixer floor-standing

	96441000	118.90



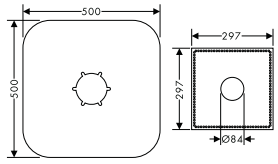

Measurements within scale drawings are in mm.

Technical specifications and units of measure are subject to change.

	finish	code no.	Euro



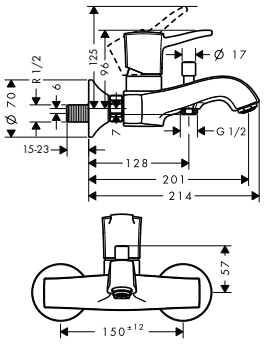

Single lever bath mixer for exposed installation with lever handle

Chrome	31340000	462.60
Chrome/Gold Optic	31340090	578.30

Air Power · Quick Clean

- projection 201 - 214 mm
- connection type: s-shaped connections
- centre distance: 150 ± 12 mm
- spray type mixer: normal spray
- flow rate at 3 bar: 22 l/ min
- ceramic cartridge
- min. operating pressure: 1 bar
- max. operating pressure: 10 bar
- temperature limitation adjustable
- diverter with automatic resetting
- intrinsically safe against backflow
- with silencer
- suitable for continous flow water heaters
- connection dimension: DN15



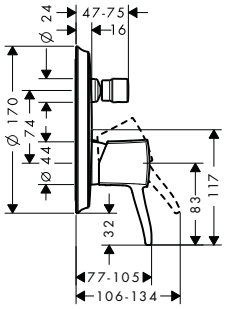

Single lever bath mixer for concealed installation with lever handle

Chrome	31345000	313.90
Chrome/Gold Optic	31345090	396.60

- connection type: basic set
- ceramic cartridge
- min. operating pressure: 1 bar
- max. operating pressure: 10 bar
- temperature limitation adjustable
- diverter with automatic resetting
- with silencer

Required parts:

· Basic set iBox universal		01800180	130.80

Optional parts:

· Extension element 17 cm	Chrome	13596000	44.70



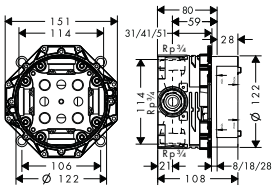

Basic set iBox universal

01800180 130.80

- suitable for all shower, bath tub and thermostat finish sets for concealed installation
- connection thread
- Rp ¾
- rotationally-symmetric installation
- sound-decoupled installation
- connection dimension: DN20

Alternative products:

· Basic set iBox universal with shut-off unit		01850180	169.90

Optional parts:

· Extension iBox universal basic set 2.5 cm		13595000	47.10
· Fastening rail set for iBox universal		96615000	33.40
· Assembly aid for iBox universal		93500000	12.20



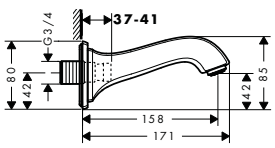

Bath spout

Chrome	13425000	181.70
Chrome/Gold Optic	13425090	231.40

Air Power · Quick Clean

- projection 158 mm
- wall-mounted
- flow rate: 22 l/ min
- spray type: normal spray

Measurements within scale drawings are in mm.

Technical specifications and units of measure are subject to change.

	finish	code no.	Euro



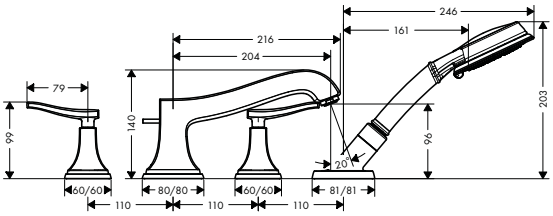

4-hole rim mounted bath mixer with lever handles

- consists of: 4-hole rim mounted bath mixer, hand shower, shower holder
- projection 204 mm
- connection type: basic set
- flow rate at 3 bar: 22 l/ min
- ceramic valves hot/ cold 180°
- diverter with automatic resetting
- non-return valve
- connection dimension: DN15

Consisting of:
- Hand shower 100 3jet (# 28548XXX)

Required parts:
- Basic set for 4-hole rim mounted bath mixer

Chrome	31441000	672.00
Chrome/Gold Optic	31441090	842.70
	13444180	798.10



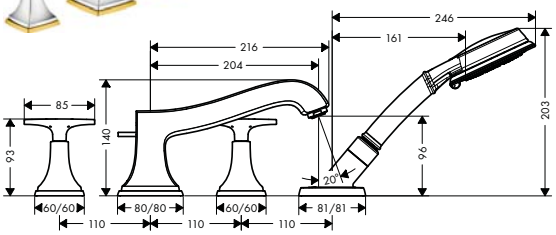

4-hole rim mounted bath mixer with cross handles

- consists of: 4-hole rim mounted bath mixer, hand shower, shower holder
- projection 204 mm
- connection type: basic set
- flow rate at 3 bar: 22 l/ min
- ceramic valves hot/ cold 180°
- diverter with automatic resetting
- non-return valve
- connection dimension: DN15

Consisting of:
- Hand shower 100 3jet (# 28548XXX)

Required parts:
- Basic set for 4-hole rim mounted bath mixer

Chrome	31449000	733.60
Chrome/Gold Optic	31449090	919.80
	13444180	798.10



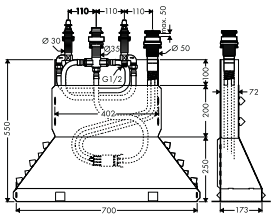

Basic set for 4-hole rim mounted bath mixer

- consists of: basic set, shower hose, Secubox
- maximum pull-out length of hand shower: 1.10 m
- connection dimension: DN15

Optional parts:
- Secuflex insert extension

	13444180	798.10
	98806000	3.80

Shower



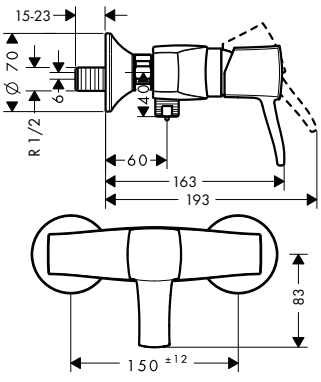

Single lever shower mixer for exposed installation with lever handle

- 1 function
- connection type: s-shaped connections
- centre distance: 150 ± 12 mm
- flow rate at 3 bar: 16 l/ min
- ceramic cartridge
- min. operating pressure: 1 bar
- max. operating pressure: 10 bar
- temperature limitation adjustable
- non-return valve
- with silencer
- hose connection DN15
- connection dimension: DN15

Chrome	31360000	352.50
Chrome/Gold Optic	31360090	440.70

Measurements within scale drawings are in mm.

Technical specifications and units of measure are subject to change.

	finish	code no.	Euro
 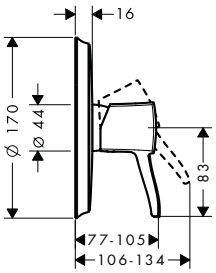			
Single lever shower mixer for concealed installation with lever handle · 1 function · connection type: basic set · flow rate at 3 bar: 29.3 l/min · ceramic cartridge · min. operating pressure: 1 bar · max. operating pressure: 10 bar · temperature limitation adjustable	Chrome Chrome/Gold Optic	31365000 31365090	280.90 352.50
Required parts: · Basic set iBox universal		01800180	130.80
Optional parts: · Extension element 17 cm	Chrome	13596000	44.70
 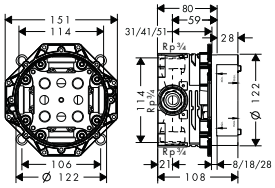			
Basic set iBox universal · suitable for all shower, bath tub and thermostat finish sets for concealed installation · connection thread · Rp ¾ · rotationally-symmetric installation · sound-decoupled installation · connection dimension: DN20		01800180	130.80
Alternative products: · Basic set iBox universal with shut-off unit		01850180	169.90
Optional parts: · Extension iBox universal basic set 2.5 cm · Fastening rail set for iBox universal · Assembly aid for iBox universal		13595000 96615000 93500000	47.10 33.40 12.20

Measurements within scale drawings are in mm.

Technical specifications and units of measure are subject to change.

Metris®



Metris page 326



Metris S page 338



Possible combinations Metris

Basin


no.31082000*


no.31087000*


no.31183000*


no.31080000*


no.31088000*


no.31086000*

Bath


no.31480000


no.31454000*


no.13151000, -400


no.15763000


no.15708000


no.31190000


no.31442000


no.31471000

Shower


no.31680000


no.31456000*


no.13171000, -400


no.15762000


no.15707000


no.28557000, -400*


no.26238000*


no.27648000, -400*


no.27361000*

Accessories


no.40514000


no.40523000


no.40522000


no.01800180

* as an example

Basin

	finish	code no.	Euro



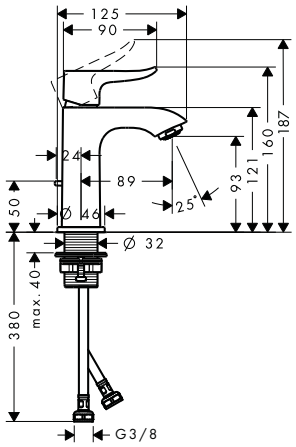

Single lever basin mixer 100 for hand washbasins with pop-up waste set

Chrome 31088000 219.50

Air Power · Eco Smart · Quick Clean · Comfort Zone

- consists of: single lever basin mixer, waste set
- ComfortZone 100
- projection 89 mm
- normal spray
- flow rate at 3 bar: 5 l/min
- ceramic cartridge
- temperature limitation adjustable
- suitable for continuous flow water heaters
- pop-up waste set G 1¼
- material waste set: metal
- connection type: G ⅜ connections
- connection dimension: DN15

Alternative products:

- Single lever basin mixer 100 for hand washbasins without waste set — Chrome 31186000 212.40



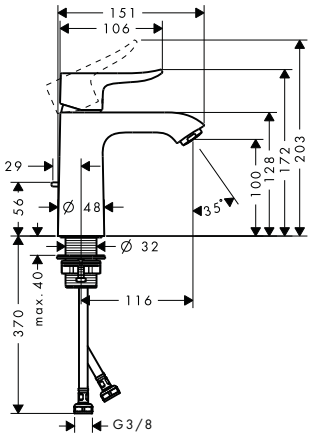

Single lever basin mixer 110 with pop-up waste set

Chrome 31080000 233.00

Air Power · Eco Smart · Quick Clean · Comfort Zone

- consists of: single lever basin mixer, waste set
- ComfortZone 110
- projection 116 mm
- normal spray
- flow rate at 3 bar: 5 l/min
- ceramic cartridge
- temperature limitation adjustable
- suitable for continuous flow water heaters
- pop-up waste set G 1¼
- material waste set: metal
- connection type: G ⅜ connections
- connection dimension: DN15

Alternative products:

- Single lever basin mixer 110 without waste set — Chrome 31084000 226.20
- Single lever basin mixer 110 LowFlow with pop-up waste set — Chrome 31203000 237.10
- Single lever basin mixer 110 LowFlow without waste set — Chrome 31204000 231.50
- Single lever basin mixer 110 for vented hot water cylinders with pop-up waste set — Chrome 31074000 338.40



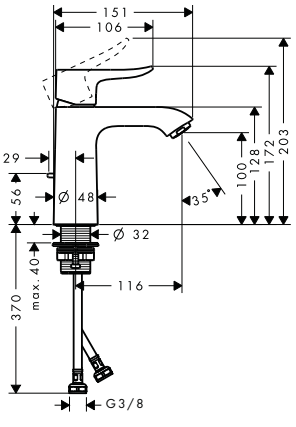

Single lever basin mixer 110 CoolStart with pop-up waste set

Chrome 31121000 237.10

Air Power · Eco Smart · Quick Clean · Comfort Zone · Cool Start

- consists of: single lever basin mixer, waste set
- ComfortZone 110
- normal spray
- flow rate at 3 bar: 5 l/min
- ceramic cartridge
- temperature limitation adjustable
- suitable for continuous flow water heaters
- pop-up waste set G 1¼
- material waste set: metal
- connection type: G ⅜ connections
- connection dimension: DN15
- cold water in middle position

Measurements within scale drawings are in mm.

Technical specifications and units of measure are subject to change.

	finish	code no.	Euro
Single lever basin mixer 200 with pop-up waste set	Chrome	31183000	288.10



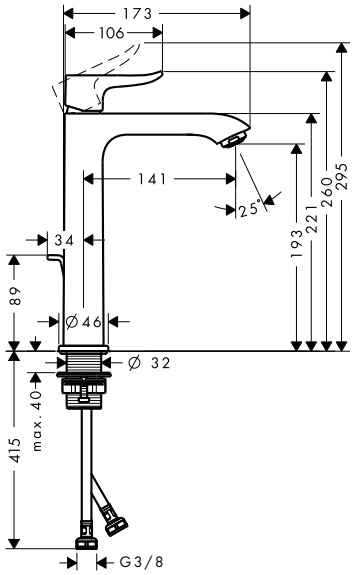

- consists of: single lever basin mixer, waste set
- ComfortZone 200
- projection 141 mm
- normal spray
- flow rate at 3 bar: 5 l/min
- ceramic cartridge
- temperature limitation adjustable
- suitable for continuous flow water heaters
- pop-up waste set G 1¼
- material waste set: metal
- connection type: G ⅜ connections
- connection dimension: DN15

Alternative products:

· Single lever basin mixer 200 without waste set	Chrome	31185000	281.00

Single lever basin mixer 230 with pop-up waste set	Chrome	31087000	308.50



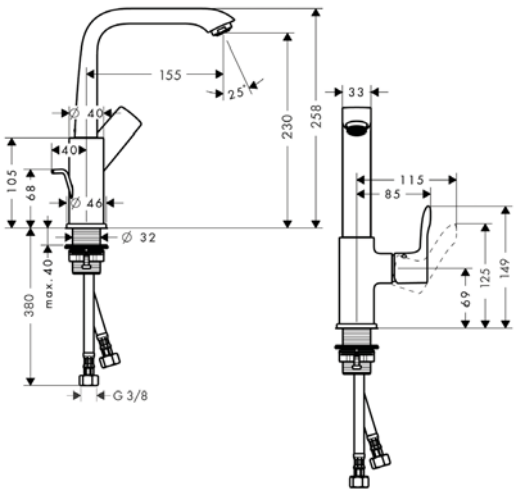

- consists of: single lever basin mixer, waste set
- ComfortZone 230
- projection 155 mm
- swivel range 120°
- normal spray
- flow rate at 3 bar: 5 l/min
- ceramic cartridge
- temperature limitation adjustable
- suitable for continuous flow water heaters
- pop-up waste set G 1¼
- material waste set: metal
- connection type: G ⅜ connections
- connection dimension: DN15
- handle position on the side: bottom-side at the base body (not suitable for wash bowls)

Alternative products:

· Single lever basin mixer 230 with push-open waste set	Chrome	31187000	308.50
· Single lever basin mixer 230 without waste set	Chrome	31081000	301.70

Measurements within scale drawings are in mm.

Technical specifications and units of measure are subject to change.

	finish	code no.	Euro
			
Single lever basin mixer 260 for washbowls with pop-up waste set · consists of: single lever basin mixer, waste set · ComfortZone 260 · projection 197 mm · normal spray · flow rate at 3 bar: 5 l/min · ceramic cartridge · temperature limitation adjustable · suitable for continuous flow water heaters · pop-up waste set G 1¼ · material waste set: metal · connection type: G ⅜ connections · connection dimension: DN15	Chrome	31082000	315.10
Alternative products: · Single lever basin mixer 260 for washbowls without waste set	Chrome	31184000	308.30
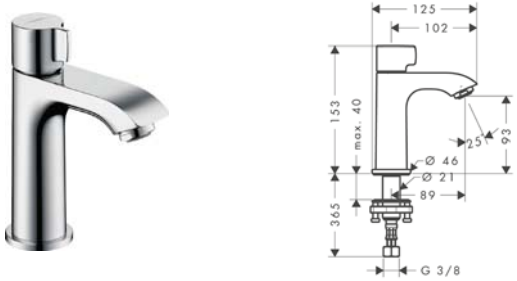			
Pillar tap 100 without waste set · ComfortZone 100 · projection 89 mm · normal spray · flow rate at 3 bar: 5 l/min · ceramic valves 90° · for cold water connection · connection type: G ⅜ connections · connection dimension: DN15	Chrome	31166000	205.80
			
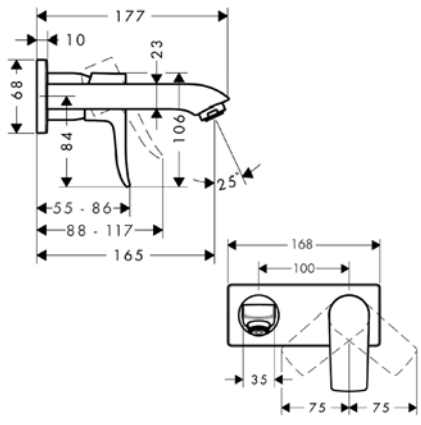			
Single lever basin mixer for concealed installation wall-mounted with spout 16.5 cm · consists of: single lever basin mixer for concealed installation wall-mounted, waste set · projection 165 mm · normal spray · flow rate at 3 bar: 5 l/min · ceramic cartridge · temperature limitation adjustable · non-closing waste set · material waste set: metal · connection type: basic set · connection dimension: DN15 · handle can be positioned on the right or left, depends on the basic set installation	Chrome	31085000	294.80
Alternative sizes: · Single lever basin mixer for concealed installation wall-mounted with spout 22.5 cm	Chrome	31086000	322.10
Alternative products: · Single lever basin mixer for concealed installation wall-mounted LowFlow with spout 16.5 cm	Chrome	31251000	284.10
Required parts: · Basic set for single lever basin mixer for concealed installation wall-mounted		13622180	210.00

Measurements within scale drawings are in mm.

Technical specifications and units of measure are subject to change.

	finish	code no.	Euro
 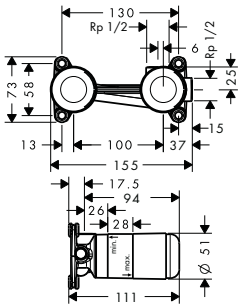	Basic set for single lever basin mixer for concealed installation wall-mounted · variable positioning of the mixer system, can be left or right of the spout · connection dimension: DN15 **Optional parts:** · Extension set 2.5 cm	13622180 31971000	210.00 105.40
 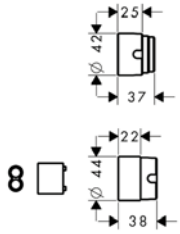	Extension set 2.5 cm · extension length: 25 mm	31971000	105.40
Bidet			
 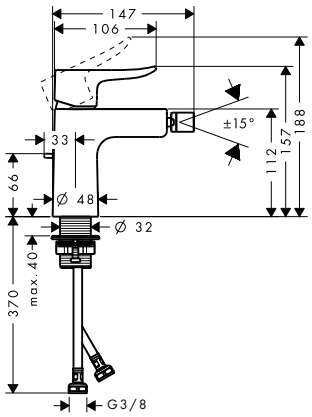	Single lever bidet mixer with pop-up waste set · consists of: single lever bidet mixer, waste set · projection 123 mm · ball-pivot joint · laminar spray · flow rate at 3 bar: 7.2 l/min · ceramic cartridge · temperature limitation adjustable · suitable for continous flow water heaters · pop-up waste set G 1¼ · material waste set: metal · connection dimension: DN15	Chrome	31280000	271.60
 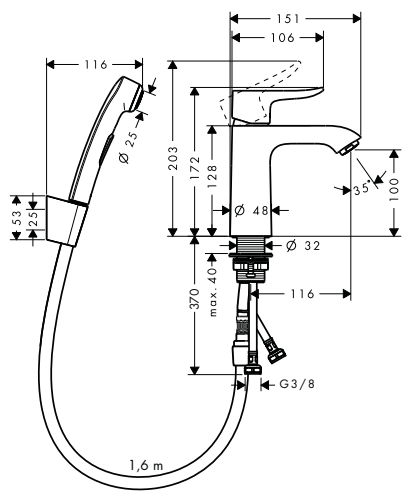	Single lever basin mixer with bidette hand shower and shower hose 160 cm · consists of: single lever basin mixer, bidette hand shower, shower holder, shower hose, waste set · ComfortZone 110 · flow rate at 3 bar: 5 l/min · ceramic cartridge · temperature limitation adjustable · suitable for continuous flow water heaters · push-open waste set G 1¼ · material waste set: metal · connection type: G ⅜ connections · connection dimension: DN15	Chrome	31285000	290.80

Measurements within scale drawings are in mm.

Technical specifications and units of measure are subject to change.

Bath

	finish	code no.	Euro



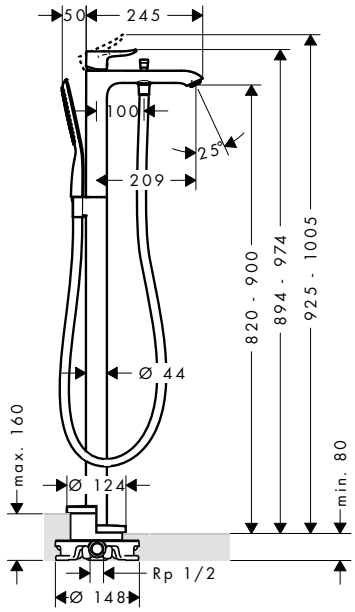

Single lever bath mixer floor-standing

Chrome — 31471000 — 1,603.90

Air Power · Quick Clean

- consists of: single lever bath mixer floor standing, baton hand shower, shower hose, shower holder
- projection 209 mm
- connection type: basic set
- spray type mixer: normal spray
- spray type hand shower: RainAir
- flow rate at 3 bar: 21 l/min
- ceramic cartridge
- min. operating pressure: 1 bar
- max. operating pressure: 10 bar
- temperature limitation adjustable
- diverter with automatic resetting
- non-return valve
- connection dimension: DN15

Consisting of:
- Baton hand shower 120 1jet (# 28558XXX)
- Shower hose 125 cm (# 28272XXX)

Required parts:

· Basic set for mixers floor-standing	10452180	437.90

Optional parts:

· Sealing foil for basic set bath mixer floor-standing	96441000	118.90



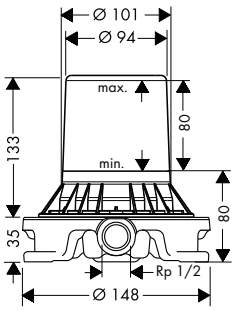

Basic set for mixers floor-standing

10452180 — 437.90

- for mounting on unfinished floor
- suitable for single lever bath mixer, single lever basin mixer and bath spout floor-standing
- connection dimension: DN15

Optional parts:

· Sealing foil for basic set bath mixer floor-standing	96441000	118.90



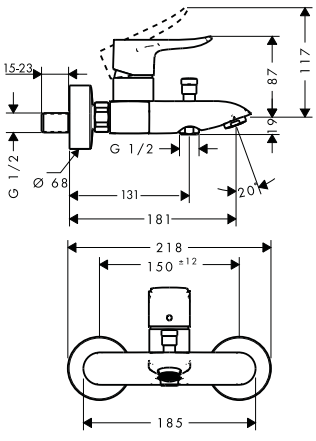

Single lever bath mixer for exposed installation

Chrome — 31480000 — 303.00

Air Power · Quick Clean

- projection 123 - 130.5 mm
- connection type: s-shaped connections
- centre distance: 150 ± 12 mm
- spray type mixer: normal spray
- flow rate for bath spout at 3 bar: 21 l/min
- flow rate of hand shower at 3 bar: 8 l/min
- ceramic cartridge
- min. operating pressure: 1 bar
- max. operating pressure: 10 bar
- temperature limitation adjustable
- diverter with automatic resetting
- intrinsically safe against backflow
- with silencer
- suitable for continous flow water heaters
- connection dimension: DN15

Measurements within scale drawings are in mm.

Technical specifications and units of measure are subject to change.

	finish	code no.	Euro
 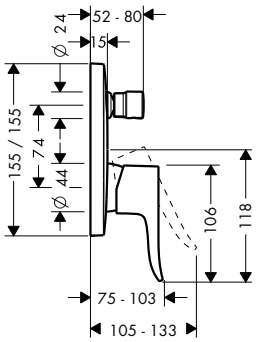			
Single lever bath mixer for concealed installation · connection type: basic set · ceramic cartridge · min. operating pressure: 1 bar · max. operating pressure: 10 bar · temperature limitation adjustable · diverter with automatic resetting · with silencer	Chrome	31454000	212.40
Alternative products: · Single lever bath mixer for concealed installation with integrated security combination according to EN1717	Chrome	31451000	329.00
Required parts: · Basic set iBox universal		01800180	130.80
Optional parts: · Extension element	Chrome	15597000	43.60
 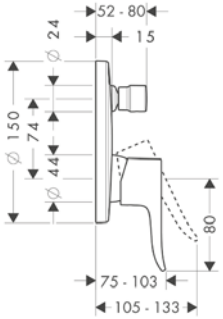			
Single lever bath mixer for concealed installation · connection type: basic set · ceramic cartridge · min. operating pressure: 1 bar · max. operating pressure: 10 bar · temperature limitation adjustable · diverter with automatic resetting · with silencer	Chrome	31493000	212.40
Alternative products: · Single lever bath mixer for concealed installation with integrated security combination according to EN1717	Chrome	31487000	329.00
Required parts: · Basic set iBox universal		01800180	130.80
Optional parts: · Extension element 15 cm	Chrome	13597000	44.70
 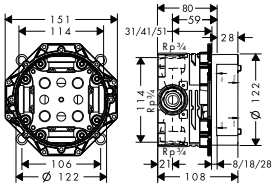			
Basic set iBox universal · suitable for all shower, bath tub and thermostat finish sets for concealed installation · connection thread · Rp ¾ · rotationally-symmetric installation · sound-decoupled installation · connection dimension: DN20		01800180	130.80
Alternative products: · Basic set iBox universal with shut-off unit		01850180	169.90
Optional parts: · Extension iBox universal basic set 2.5 cm · Fastening rail set for iBox universal · Assembly aid for iBox universal		13595000 96615000 93500000	47.10 33.40 12.20

Measurements within scale drawings are in mm.

Technical specifications and units of measure are subject to change.

	finish	code no.	Euro
Single lever bath mixer for concealed installation · connection type: basic set · ceramic cartridge · min. operating pressure: 1 bar · max. operating pressure: 10 bar · temperature limitation adjustable · diverter with automatic resetting	Chrome	31484000	109.60
Required parts: · Basic set for single lever bath mixer for concealed installation		31741180	118.60



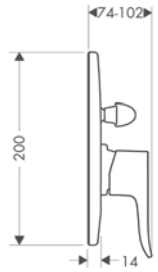

Basic set for single lever bath mixer for concealed installation · ceramic cartridge · connection dimension: DN15		31741180	118.60



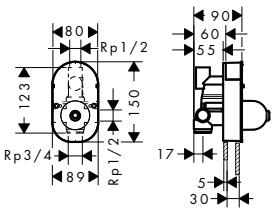

Bath spout · projection 165 mm · wall-mounted · flow rate: 20 l/min · spray type: normal spray	Chrome	31494000	203.50



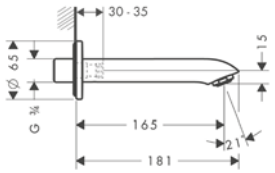

2-hole rim mounted bath mixer · connection type: G ¾ · centre distance: 180 mm · ceramic cartridge (Highflow) · operating pressure from 0.02 MPa · diverter with automatic resetting · non-return valve · with silencer · connection dimension: DN15	Chrome	31423000	303.00



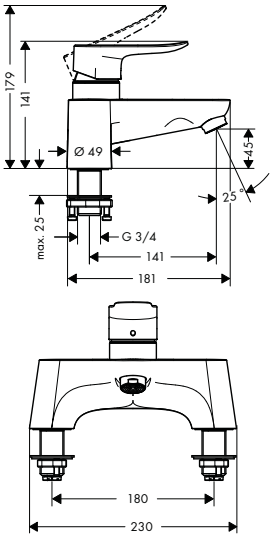

Measurements within scale drawings are in mm.

Technical specifications and units of measure are subject to change.

	finish	code no.	Euro



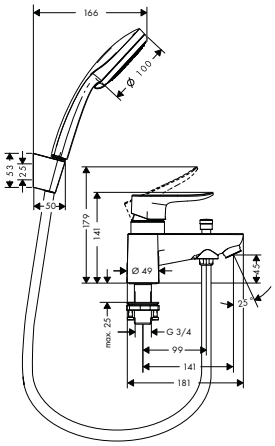

2-hole rim mounted bath mixer with diverter valve and Croma 100 hand shower Vario

Chrome — 31422000 — 364.70

Air Power · Quick Clean

- consists of: 2-hole rim mounted bath mixer, hand shower, shower holder, shower hose
- connection type: G ¾
- centre distance: 180 mm
- ceramic cartridge (Highflow)
- operating pressure from 0.02 MPa
- diverter with automatic resetting
- non-return valve
- with silencer
- connection dimension: DN15

Consisting of:
- Hand shower Vario EcoSmart 9 l/min (# 28537000)
- Shower holder Porter S (# 28331XXX)
- Shower hose 160 cm (# 28276XXX)



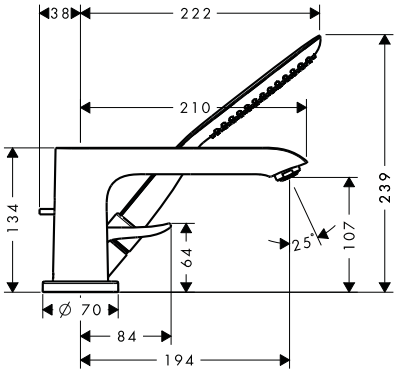

3-hole rim mounted single lever bath mixer

Chrome — 31190000 — 727.20

Air Power · Quick Clean

- consists of: 3-hole rim mounted single lever bath mixer, baton hand shower, shower holder
- projection 220 mm
- connection type: basic set
- spray type mixer: normal spray
- spray type hand shower: RainAir
- maximum pull-out length of hand shower: 1.10 m
- flow rate at 3 bar: 22 l/min
- ceramic cartridge
- min. operating pressure: 1 bar
- max. operating pressure: 10 bar
- temperature limitation adjustable
- connection dimension: DN15

Required parts:
- Basic set for 3-hole rim mounted single lever bath mixer — 13437180 — 653.90



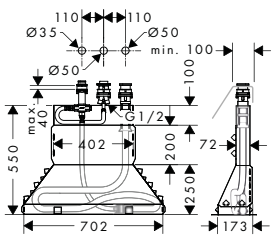

Basic set for 3-hole rim mounted single lever bath mixer

13437180 — 653.90

- consists of: basic set, shower hose, Secubox
- maximum pull-out length of hand shower: 1.10 m
- connection thread: G ½
- connection dimension: DN15

Optional parts:
- Secuflex insert extension — 98806000 — 3.80

Measurements within scale drawings are in mm.

Technical specifications and units of measure are subject to change.

	finish	code no.	Euro
4-hole rim mounted bath mixer	Chrome	31442000	727.20



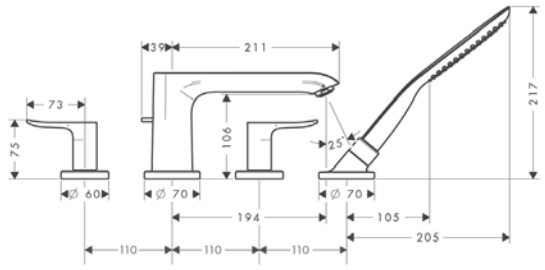

- consists of: 4-hole rim mounted bath mixer, baton hand shower, shower holder
- projection 220 mm
- connection type: basic set
- spray type mixer: normal spray
- spray type hand shower: RainAir
- maximum pull-out length of hand shower: 1.10 m
- flow rate at 3 bar: 22 l/ min
- ceramic valves hot/ cold 90°
- min. operating pressure: 1 bar
- max. operating pressure: 10 bar
- connection dimension: DN15

Consisting of:
- Baton hand shower 120 1jet (# 28558XXX)

Required parts:

· Basic set for 4-hole rim mounted bath mixer	13444180	798.10

Basic set for 4-hole rim mounted bath mixer	13444180	798.10



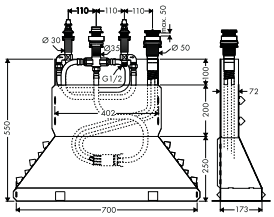

- consists of: basic set, shower hose, Secubox
- maximum pull-out length of hand shower: 1.10 m
- connection dimension: DN15

Optional parts:

· Secuflex insert extension	98806000	3.80

Shower

Single lever shower mixer for exposed installation	Chrome	31680000	256.40



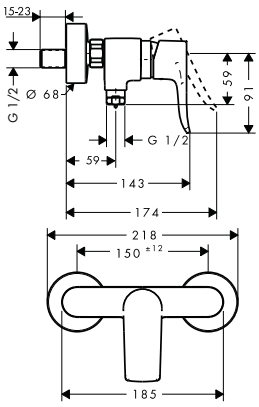

- 1 function
- connection type: s-shaped connections
- centre distance: 150 ± 12 mm
- flow rate of hand shower at 3 bar: 16 l/ min
- ceramic cartridge
- min. operating pressure: 1 bar
- max. operating pressure: 10 bar
- temperature limitation adjustable
- non-return valve
- with silencer
- hose connection DN15
- connection dimension: DN15

Single lever shower mixer for concealed installation	Chrome	31456000	198.80



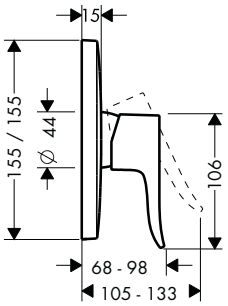

- 1 function
- connection type: basic set
- flow rate at 3 bar: 29.3 l/ min
- ceramic cartridge
- min. operating pressure: 1 bar
- max. operating pressure: 10 bar
- temperature limitation adjustable
- with silencer

Required parts:

· Basic set iBox universal	01800180	130.80

Optional parts:

· Extension element	Chrome	15597000	43.60

Measurements within scale drawings are in mm.

Technical specifications and units of measure are subject to change.

	finish	code no.	Euro
 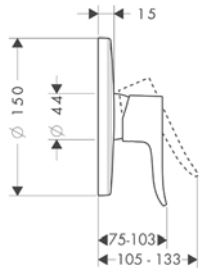			
Single lever shower mixer for concealed installation · 1 function · connection type: basic set · flow rate at 3 bar: 29.3 l/min · ceramic cartridge · min. operating pressure: 1 bar · max. operating pressure: 10 bar · temperature limitation adjustable · with silencer	Chrome	31685000	198.80
Required parts: · Basic set iBox universal		01800180	130.80
Optional parts: · Extension element 15 cm	Chrome	13597000	44.70
 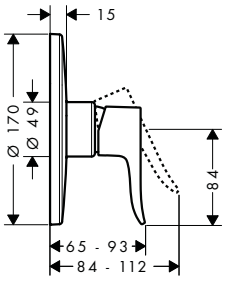			
Single lever shower mixer HighFlow for concealed installation · 1 function · connection type: basic set · flow rate at 3 bar: 49 l/min · ceramic cartridge (Highflow) · temperature limitation adjustable · connection dimension: DN15	Chrome	31652000	198.80
Required parts: · Basic set iBox universal with shut-off unit · Basic set iBox universal		01850180 01800180	169.90 130.80
Optional parts: · Basic set for Trio diverter valve for concealed installation		15984180	153.20
 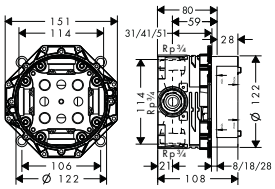			
Basic set iBox universal · suitable for all shower, bath tub and thermostat finish sets for concealed installation · connection thread · Rp ¾ · rotationally-symmetric installation · sound-decoupled installation · connection dimension: DN20		01800180	130.80
Alternative products: · Basic set iBox universal with shut-off unit		01850180	169.90
Optional parts: · Extension iBox universal basic set 2.5 cm · Fastening rail set for iBox universal · Assembly aid for iBox universal		13595000 96615000 93500000	47.10 33.40 12.20
 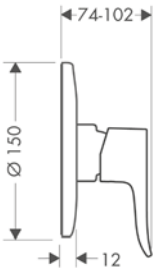			
Single lever shower mixer for concealed installation · 1 function · connection type: basic set · min. operating pressure: 1 bar · max. operating pressure: 10 bar	Chrome	31686000	96.00
Required parts: · Basic set for single lever shower mixer for concealed installation		13620180	105.30

Measurements within scale drawings are in mm.

Technical specifications and units of measure are subject to change.

	finish	code no.	Euro
Basic set for single lever shower mixer for concealed installation · ceramic cartridge · connection dimension: DN15		13620180	105.30



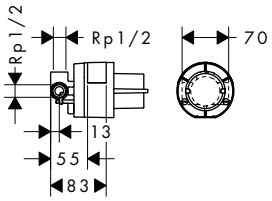

Measurements within scale drawings are in mm.

Technical specifications and units of measure are subject to change.

Possible combinations Metris S

Basin


no.31022000*


no.31159000*


no.31060000*


no.31163000*


no.31100000*

Bath


no.31460000


no.31465000*


no.13114000


no.15743000


no.15758000


no.31446000

Shower


no.31660000


no.31665000


no.13116000


no.15744000


no.15757000


no.26530000, -400*


no.27378000, -400


no.26631000, -400*


no.27133000, -400

Accessories


no.40514000


no.40523000


no.40522000


no.01800180

* as an example

Basin

	finish	code no.	Euro
Single lever basin mixer 100 with pop-up waste set	Chrome	31060000	264.10



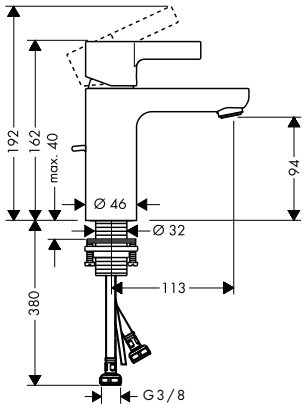

- consists of: single lever basin mixer, waste set
- ComfortZone 100
- projection 113 mm
- normal spray
- flow rate at 3 bar: 5 l/min
- ceramic cartridge
- temperature limitation adjustable
- suitable for continuous flow water heaters
- pop-up waste set G 1¼
- material waste set: metal
- connection type: G ⅜ connections
- connection dimension: DN15

Alternative products:

· Single lever basin mixer 100 without waste set	Chrome	31068000	251.80
· Single lever basin mixer 100 LowFlow without waste set	Chrome	31015000	244.80
· Single lever basin mixer 100 LowFlow 3.5 l/min with pop-up waste set	Chrome	31063000	254.50
· Single lever basin mixer 100 LowFlow 2 l/min with pop-up waste set	Chrome	31016000	256.60

Single lever basin mixer with swivel spout and pop-up waste set	Chrome	31159000	324.50



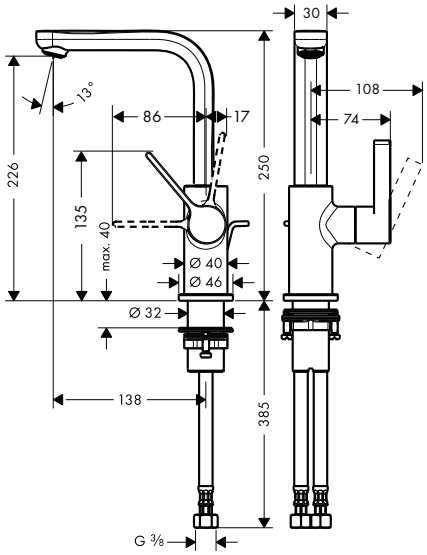

- consists of: single lever basin mixer, waste set
- ComfortZone 230
- projection 138 mm
- swivel range 120°
- normal spray
- flow rate at 3 bar: 5 l/min
- ceramic cartridge
- temperature limitation adjustable
- suitable for continuous flow water heaters
- pop-up waste set G 1¼
- material waste set: metal
- connection type: G ⅜ connections
- connection dimension: DN15
- handle position on the side: bottom-side at the base body (not suitable for wash bowls)

Alternative products:

· Single lever basin mixer 230 with swivel spout and push-open waste set	Chrome	31161000	324.50

Measurements within scale drawings are in mm.

	finish	code no.	Euro
Single lever basin mixer 260 for washbowls with pop-up waste set	Chrome	31022000	344.90



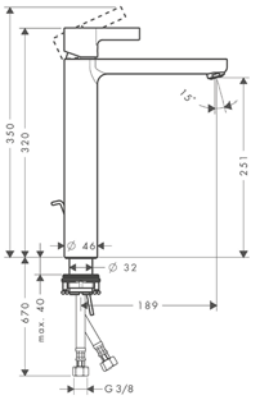

- consists of: single lever basin mixer, waste set
- ComfortZone 260
- projection 189 mm
- normal spray
- flow rate at 3 bar: 5 l/ min
- ceramic cartridge
- temperature limitation adjustable
- suitable for continuous flow water heaters
- pop-up waste set G 1¼
- material waste set: metal
- connection type: G ⅜ connections
- connection dimension: DN15

Alternative products:

· Single lever basin mixer 260 for washbowls without waste set	Chrome	31023000	332.80

Single lever basin mixer for concealed installation wall-mounted with spout 16.5 cm	Chrome	31162000	327.60



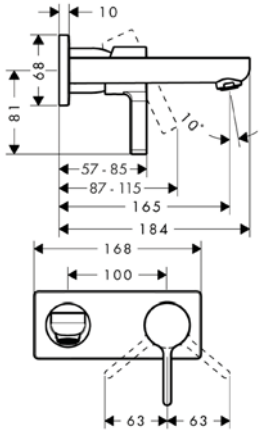

- consists of: single lever basin mixer for concealed installation wall-mounted, waste set
- projection 165 mm
- normal spray
- flow rate at 3 bar: 5 l/ min
- ceramic cartridge
- temperature limitation adjustable
- suitable for continuous flow water heaters
- non-closing waste set
- material waste set: metal
- connection type: basic set
- connection dimension: DN15
- handle can be positioned on the right or left, depends on the basic set installation

Alternative sizes:

· Single lever basin mixer for concealed installation wall-mounted with spout 22.5 cm	Chrome	31163000	356.20

Required parts:

· Basic set for single lever basin mixer for concealed installation wall-mounted		13622180	210.00

Basic set for single lever basin mixer for concealed installation wall-mounted		13622180	210.00



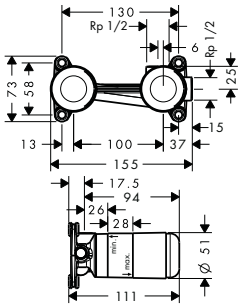

- variable positioning of the mixer system, can be left or right of the spout
- connection dimension: DN15

Optional parts:

· Extension set 2.5 cm		31971000	105.40

Measurements within scale drawings are in mm.

Technical specifications and units of measure are subject to change.

	finish	code no.	Euro
Extension set 2.5 cm · extension length: 25 mm		31971000	105.40



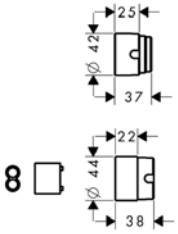



Electronic basin mixer with temperature control battery operation · ComfortZone 150 · projection 128 mm · flow rate at 3 bar: 5 l/min · theft-proof aerator · temperature limitation adjustable · temperature adjustable via mixer lever on the side · non-return valve · suitable for continous flow water heaters · infrared sensor technology · automatic environmental adjustment of infrared sensor · adjustable optical range of infrared sensor (2 settings) · battery condition indicator available · battery operation 6 V (Lithium battery, lifetime approx. 2 years, battery included in scope of delivery) · hygiene rinse activatable (automatic water flow for 10 seconds every 24 hours following the last operation) · permanent rinse activatable (single water flow for 180 seconds, suitable for thermal disinfection) · manual water stop for washbasin cleaning · performance may be impaired if the sensor is obscured by the design of the wash basin, or when the wash basin is oversized and the distance between sensor and the wash basin edge is larger than 75 mm · functional restriction due to too large distance · connection dimension: DN15 · TÜV certified · dirt filters in the connection hoses · two filter units with fine filter to protect from incoming dirt, for assembly on existing angle valves, filter element can be removed and cleaned	Chrome	31100000 Air Power Eco Smart Comfort Zone	689.40

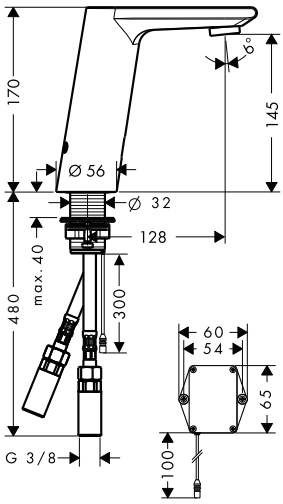

Alternative products:

· Electronic basin mixer with temperature pre-adjustment battery operation	Chrome	31101000	635.80
· Electronic basin mixer with temperature control mains connection 230 V	Chrome	31102000	730.80
· Electronic basin mixer with temperature pre-adjustment mains connection 230 V	Chrome	31103000	675.70

Measurements within scale drawings are in mm.

Bidet



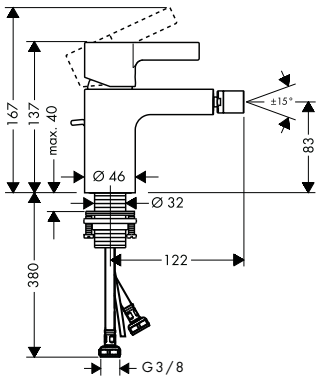

	finish	code no.	Euro
Single lever bidet mixer with pop-up waste set · consists of: single lever bidet mixer, waste set · projection 122 mm · aerator with ball pivot · laminar spray · flow rate at 3 bar: 7.2 l/min · ceramic cartridge · temperature limitation adjustable · suitable for continous flow water heaters · material waste set: metal · connection dimension: DN15	Chrome	31261000	264.10



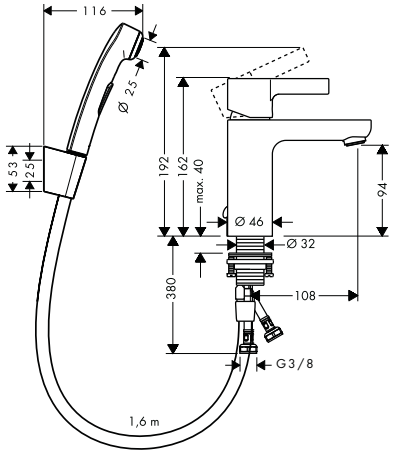

Single lever basin mixer with bidette hand shower and shower hose 160 cm · consists of: single lever basin mixer, bidette hand shower, shower holder, shower hose · ComfortZone 90 · flow rate at 3 bar: 5 l/min · ceramic cartridge · temperature limitation adjustable · suitable for continuous flow water heaters · connection type: G ⅜ connections · connection dimension: DN15	Chrome	31160000	293.30

Bath



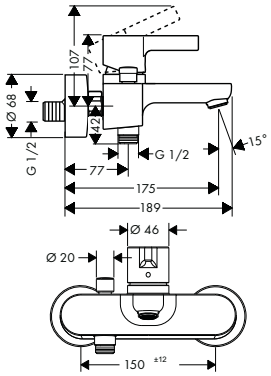

Single lever bath mixer for exposed installation · projection 167.5 - 175 mm · connection type: s-shaped connections · centre distance: 150 mm · spray type mixer: normal spray · flow rate for bath spout at 3 bar: 22 l/min · flow rate of hand shower at 3 bar: 16 l/min · ceramic cartridge · min. operating pressure: 1 bar · max. operating pressure: 10 bar · temperature limitation adjustable · diverter with automatic resetting · non-return valve · with silencer · connection dimension: DN15	Chrome	31460000	344.40

Measurements within scale drawings are in mm.

Technical specifications and units of measure are subject to change.

	finish	code no.	Euro
 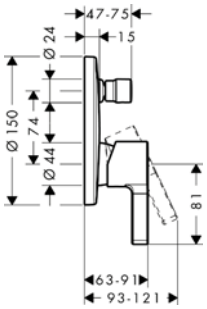			
Single lever bath mixer for concealed installation · connection type: basic set · ceramic cartridge · min. operating pressure: 1 bar · max. operating pressure: 10 bar · temperature limitation adjustable · diverter with automatic resetting · with silencer	Chrome	31465000	237.00
Alternative products:			
· Single lever bath mixer for concealed installation with integrated security combination according to EN1717	Chrome	31466000	376.50
Required parts:			
· Basic set iBox universal		01800180	130.80
Optional parts:			
· Extension element 15 cm	Chrome	13597000	44.70
 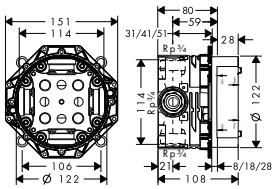			
Basic set iBox universal · suitable for all shower, bath tub and thermostat finish sets for concealed installation · connection thread · Rp ¾ · rotationally-symmetric installation · sound-decoupled installation · connection dimension: DN20		01800180	130.80
Alternative products:			
· Basic set iBox universal with shut-off unit		01850180	169.90
Optional parts:			
· Extension iBox universal basic set 2.5 cm		13595000	47.10
· Fastening rail set for iBox universal		96615000	33.40
· Assembly aid for iBox universal		93500000	12.20
 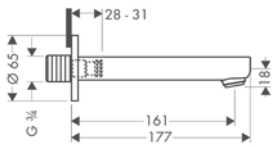			
Bath spout · connection type: G ¾ · projection 161 mm · wall-mounted · flow rate: 20 l/min · spray type: normal spray	Chrome	14420000	173.70
		Air Power Quick Clean	
 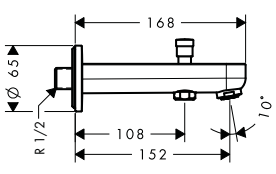			
Bath spout 15.2 cm with diverter valve · connection type: G ½ · with automatic resetting · with escutcheon · with integrated safety combination EN1717 · projection 152 mm · wall-mounted · flow rate: 25 l/min · connection dimension: DN15 · intrinsically safe against backflow	Chrome	31417000	168.50
		Air Power Quick Clean	
Alternative sizes:			
· Bath spout 22.8 cm with diverter valve	Chrome	31416000	181.40

Measurements within scale drawings are in mm.

Technical specifications and units of measure are subject to change.

	finish	code no.	Euro



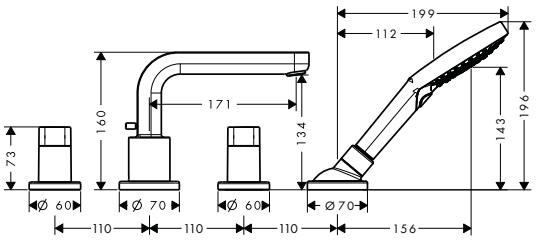

4-hole rim mounted bath mixer with spout 17.1 cm

Chrome — 31446000 — 722.60

Air Power · Quick Clean

- consists of: 4-hole rim mounted bath mixer, hand shower, shower holder
- projection 171 mm
- connection type: basic set
- spray type mixer: normal spray
- spray type hand shower: Rain, RainAir, Whirl
- maximum pull-out length of hand shower: 1.10 m
- flow rate at 3 bar: 22 l/ min
- ceramic valves hot/ cold 90°
- min. operating pressure: 1 bar
- max. operating pressure: 10 bar
- connection dimension: DN15

Consisting of:

- Hand shower 120 3jet (# 26530XXX)

Alternative sizes:

- 4-hole rim mounted bath mixer with spout 22 cm — Chrome — 31447000 — 722.60

Required parts:

- Basic set for 4-hole rim mounted bath mixer — 13444180 — 798.10



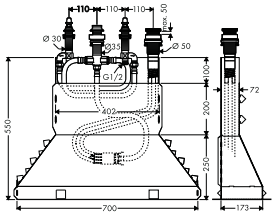

Basic set for 4-hole rim mounted bath mixer

13444180 — 798.10

- consists of: basic set, shower hose, Secubox
- maximum pull-out length of hand shower: 1.10 m
- connection dimension: DN15

Optional parts:

- Secuflex insert extension — 98806000 — 3.80



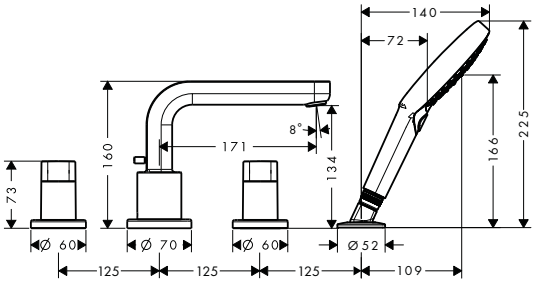

4-hole rim mounted bath mixer

Chrome — 31443000 — 565.70

Air Power · Quick Clean

- consists of: 4-hole rim mounted bath mixer, hand shower, shower holder
- connection type: basic set
- maximum pull-out length of hand shower: 1.60 m
- flow rate at 3 bar: 22 l/ min
- ceramic valves hot/ cold 90°
- min. operating pressure: 1 bar
- max. operating pressure: 10 bar
- non-return valve
- connection dimension: DN15
- with integrated safety combination EN1717

Consisting of:

- Hand shower 120 3jet (# 26530XXX)

Required parts:

- Basic set for 4-hole rim mounted bath mixer — 13244180 — 275.20

Measurements within scale drawings are in mm.

Technical specifications and units of measure are subject to change.

	finish	code no.	Euro
 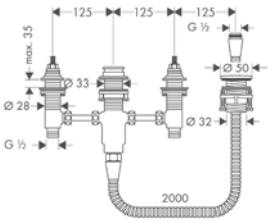			
Basic set for 4-hole rim mounted bath mixer · consists of: basic set, shower holder, shower hose · maximum pull-out length of hand shower: 1.60 m · maintenance opening required · suitable for 4-hole rim mounted bath mixer · connection thread: G ½ · connection dimension: DN15 · ceramic valves hot/ cold 90°		13244180	275.20

Shower


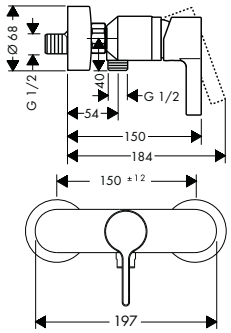

Single lever shower mixer for exposed installation
· 1 function
· connection type: s-shaped connections
· centre distance: 150 ± 12 mm
· flow rate of hand shower at 3 bar: 12 l/min
· ceramic cartridge
· min. operating pressure: 1 bar
· max. operating pressure: 10 bar
· temperature limitation adjustable
· non-return valve
· with silencer
· hose connection DN15
· connection dimension: DN15

Chrome | 31660000 | 264.10


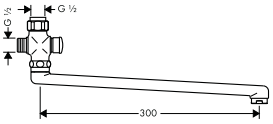

Long swivel spout 30 cm
· with automatic resetting
· length 300 mm
· connection dimension DN15
· for installation on single lever shower mixer

Chrome | 14495000 | 94.80


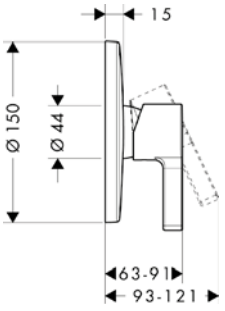

Single lever shower mixer for concealed installation
· 1 function
· connection type: basic set
· flow rate at 3 bar: 29.3 l/min
· ceramic cartridge
· min. operating pressure: 1 bar
· max. operating pressure: 10 bar
· temperature limitation adjustable

Chrome | 31665000 | 214.90

Required parts:
· Basic set iBox universal | 01800180 | 130.80

Optional parts:
· Extension element 15 cm | Chrome | 13597000 | 44.70

Measurements within scale drawings are in mm.

Technical specifications and units of measure are subject to change.

	finish	code no.	Euro
Basic set iBox universal · suitable for all shower, bath tub and thermostat finish sets for concealed installation · connection thread · Rp ¾ · rotationally-symmetric installation · sound-decoupled installation · connection dimension: DN20		01800180	130.80
Alternative products:			
· Basic set iBox universal with shut-off unit		01850180	169.90
Optional parts:			
· Extension iBox universal basic set 2.5 cm		13595000	47.10
· Fastening rail set for iBox universal		96615000	33.40
· Assembly aid for iBox universal		93500000	12.20



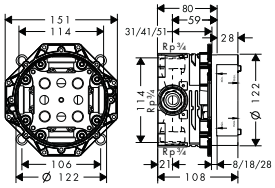

Measurements within scale drawings are in mm.

Technical specifications and units of measure are subject to change.

Talis®



Talis Select E / Talis E page 348 

Talis Select S / Talis S page 362 

Talis S page 375 

Possible combinations Talis Select E / Talis E

Basin


no.71752000*


no.71716000*


no.71754000*


no.71750000*


no.71710000*


no.71700000*


no.71706000


no.71733000


no.71734000*

Bath


no.71740000*


no.71745000*


no.71747000


no.71748000


no.15763000


no.15707000


no.13114000

Shower


no.71760000*


no.71765000*


no.13116000


no.15762000


no.15708000


no.26810400*


no.26524000, -400


no.26590400*


no.27256400

Accessories


no.41503000


no.41508000


no.41505000


no.01800180

* as an example

Additional FinishPlus products Talis E

Hand showers and accessories



Raindance® Select E
Hand shower 120 3jet
26520, -000, -140, -340, -400, -670, -700, -990



Raindance® Select S
Hand shower 120 3jet
26530, -000, -140, -340, -400, -670, -700, -990

Hand shower 120 3jet EcoSmart 9 l/min
26531, -000, -140, -340, -400, -670, -700, -990



FixFit®
Wall outlet E without non-return valve
27454, -000, -140, -340, -670, -700, -990



Shower holder Porter S
28331, -000, -140, -340, -670, -700, -990



Isiflex®
Shower hose 125 cm
28272, -000, -140, -340, -670, -700, -990
Shower hose 160 cm
28276, -000, -140, -340, -670, -700, -990

Overhead showers and accessories



Croma®
Overhead shower 280 1jet
26220, -000, -140, -340, -670, -700, -990

Overhead shower 280 1jet EcoSmart 9 l/min
26221, -000, -140, -340, -670, -700, -990



Ceiling connector S 10 cm
27393, -000, -140, -340, -670, -700, -990

Ceiling connector S 30 cm
27389, -000, -140, -340, -670, -700, -990 (not shown)

Shower arm square 38.9 cm
27694, -000, -140, -340, -670, -700, -990 (not shown)

Shower arm 38.9 cm
27413, -000, -140, -340, -670, -700, -990 (not shown)

Additional FinishPlus products Talis E

Shower bars and Showerpipes



Unica®
Shower bar S Puro 65 cm
with shower hose
28632, -000, -140, -340, -670, -700, -990

Shower bar S Puro 90 cm
with shower hose (not shown)
28631, -000, -140, -340, -670, -700, -990



Croma® Select S
Showerpipe 280 1jet with thermostat
26890, -140, -340, -670, -700, -990

Showerpipe 280 1jet EcoSmart 9 l/min with thermostat
26891, -140, -340, -670, -700, -990

Thermostat for exposed / concealed installation



Ecostat®
Shower thermostat Comfort for exposed installation
13116, -000, -140, -340, -670, -700, -990



Ecostat®
Bath thermostat Comfort for exposed installation
13114, -000, -140, -340, -670, -700, -990



RainSelect®
Thermostat for concealed installation
for 2 functions
15380, -000, -140, -340, -670, -700, -990

Basic set for 2 functions
15310180 (not shown)



RainSelect®
Thermostat for concealed installation
for 4 functions
15382, -000, -140, -340, -670, -700, -990

Basic set for 4 functions
15312180 (not shown)



ShowerSelect® S
Thermostat for concealed installation
for 2 functions
15743, -000, -140, -340, -670, -700, -990



Ecostat® S
Thermostat for concealed installation
for 2 functions
15758, -000, -140, -340, -670, -700, -990

Additional FinishPlus products Talis E



Exafill® S
Finish set bath filler, waste and overflow set
58117, -000, -140, -340, -670, -700, -990



Flexaplus®
Finish set waste and overflow set
58185, -000, -140, -340, -670, -700, -990



Design trap Flowstar S
52105, -000, -140, -340, -670, -700, -990

Waste set push-open
for basin and bidet mixers
50100, -000, -140, -340, -670, -700, -990 (not shown)
Cover
13950, -000, -140, -670, -700, -990 (not shown)

Wastes and overflow



sBox®
Finish set square
28010, -000, -140, -340, -670, -700, -990

Rim and tile mounted bath basic set
13560180 (not shown)

Installation plate for tile mounted installation
28016000 (not shown)

Mounting angle for installation plate
for tile mounted installation
28021000 (not shown)

Kitchen mixers



Metris® Select M71
2-hole single lever kitchen mixer
with pull-out spray
73818, -000, -340, -670, -800



Focus® M41
Single lever kitchen mixer 240
with pull-out spray
31815, -000, -670, -800



Focus® M41
Single lever kitchen mixer 280
with swivel spout
31817, -000, -670, -800



Focus® M41
Single lever kitchen mixer 260
with swivel spout
31820, -000, -670, -800

-000 Chrome
-140 Brushed Bronze
-340 Brushed Black Chrome
-670 Matt Black
-700 Matt White
-990 Polished Gold Optic

Basin

	finish	code no.	Euro



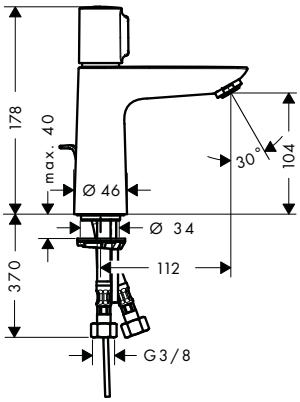

Basin mixer 110 with pop-up waste set

Chrome — 71750000 — 181.00

Select · Air Power · Eco Smart · Quick Clean · Comfort Zone

- consists of: Basin mixer, waste set
- ComfortZone 110
- projection 112 mm
- normal spray
- flow rate at 3 bar: 5 l/min
- Select cartridge with temperature control
- temperature limitation adjustable
- suitable for continuous flow water heaters
- pop-up waste set G 1¼
- material waste set: metal
- connection type: G ⅜ connections
- connection dimension: DN15

Alternative products:

- Basin mixer 110 without waste set — Chrome — 71751000 — 174.10



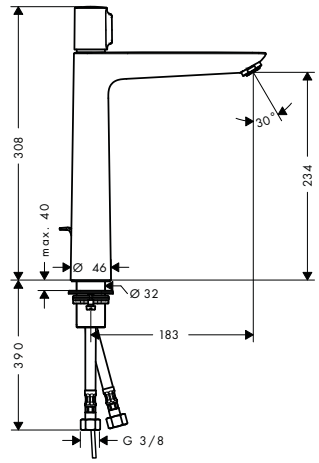

Basin mixer 240 with pop-up waste set

Chrome — 71752000 — 264.60

Select · Air Power · Eco Smart · Quick Clean · Comfort Zone

- consists of: Basin mixer, waste set
- ComfortZone 240
- projection 183 mm
- normal spray
- flow rate at 3 bar: 5 l/min
- Select cartridge with temperature control
- temperature limitation adjustable
- suitable for continuous flow water heaters
- pop-up waste set G 1¼
- material waste set: metal
- connection type: G ⅜ connections
- connection dimension: DN15

Alternative products:

- Basin mixer 240 without waste set — Chrome — 71753000 — 258.80



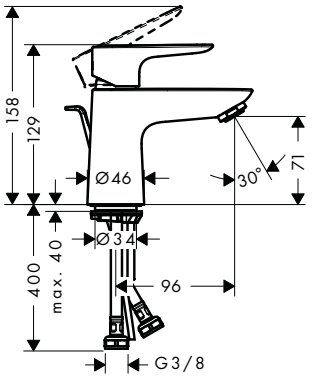

Single lever basin mixer 80 with pop-up waste set

Chrome — 71700000 — 108.90

Air Power · Eco Smart · Quick Clean · Comfort Zone

- consists of: single lever basin mixer, waste set
- ComfortZone 80
- projection 96 mm
- normal spray
- flow rate at 3 bar: 5 l/min
- ceramic cartridge
- temperature limitation adjustable
- suitable for continuous flow water heaters
- pop-up waste set G 1¼
- material waste set: metal
- connection type: G ⅜ connections
- connection dimension: DN15

Alternative products:

- Single lever basin mixer 80 with push-open waste set — Chrome — 71701000 — 108.90
- Single lever basin mixer 80 without waste set — Chrome — 71702000 — 102.10
- Single lever basin mixer 80 LowFlow with pop-up waste set — Chrome — 71705000 — 108.90
- Single lever basin mixer 80 for vented hot water cylinders with pop-up waste set — Chrome — 71707000 — 210.80

Measurements within scale drawings are in mm.

Technical specifications and units of measure are subject to change.



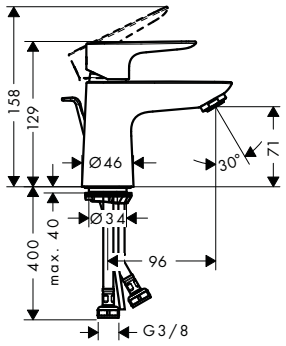

Single lever basin mixer 80 CoolStart with pop-up waste set

- consists of: single lever basin mixer, waste set
- ComfortZone 80
- projection 96 mm
- normal spray
- flow rate at 3 bar: 5 l/min
- ceramic cartridge
- temperature limitation adjustable
- suitable for continuous flow water heaters
- pop-up waste set G 1¼
- material waste set: metal
- connection type: G ⅜ connections
- connection dimension: DN15
- cold water in middle position

finish	code no.	Euro
Chrome	71703000	108.90

Alternative products:

	finish	code no.	Euro
· Single lever basin mixer 80 CoolStart without waste set	Chrome	71704000	102.10



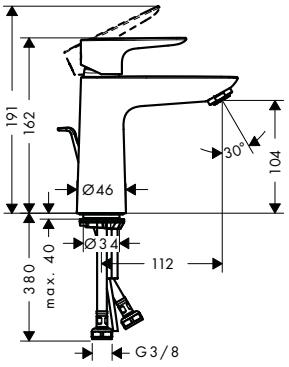

Single lever basin mixer 110 with pop-up waste set

- consists of: single lever basin mixer, waste set
- ComfortZone 110
- projection 112 mm
- normal spray
- flow rate at 3 bar: 5 l/min
- ceramic cartridge
- temperature limitation adjustable
- suitable for continuous flow water heaters
- pop-up waste set G 1¼
- material waste set: metal
- connection type: G ⅜ connections
- connection dimension: DN15

finish	code no.	Euro
Chrome	71710000	132.90
Brushed Bronze	71710140	199.40
Brushed Black	71710340	199.40
Chrome Matt Black	71710670	186.10
Matt White	71710700	186.10
Polished Gold Optic	71710990	199.40

Alternative products:

	finish	code no.	Euro
· Single lever basin mixer 110 with push-open waste set	Chrome	71711000	132.90
· Single lever basin mixer 110 without waste set	Chrome	71712000	126.00
	Brushed Bronze	71712140	189.00
	Brushed Black	71712340	189.00
	Chrome Matt Black	71712670	176.40
	Matt White	71712700	176.40
	Polished Gold Optic	71712990	189.00
· Single lever basin mixer 110 LowFlow with pop-up waste set	Chrome	71715000	132.90

Measurements within scale drawings are in mm.



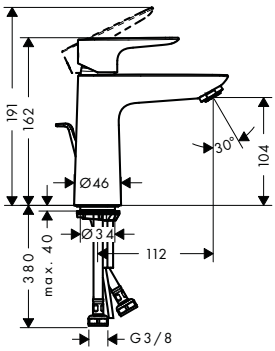

Single lever basin mixer 110 CoolStart with pop-up waste set

- consists of: single lever basin mixer, waste set
- ComfortZone 110
- projection 112 mm
- normal spray
- flow rate at 3 bar: 5 l/min
- ceramic cartridge
- temperature limitation adjustable
- suitable for continuous flow water heaters
- pop-up waste set G 1¼
- material waste set: metal
- connection type: G ⅜ connections
- connection dimension: DN15
- cold water in middle position

finish	code no.	Euro
Chrome	71713000	132.90
Brushed Bronze	71713140	199.40
Brushed Black	71713340	199.40
Chrome		
Matt Black	71713670	186.10
Matt White	71713700	186.10
Polished Gold Optic	71713990	199.40

Air Power · Eco Smart · Quick Clean · Comfort Zone · Cool Start

Alternative products:

- Single lever basin mixer 110 CoolStart without waste set

Chrome	71714000	126.00
Brushed Bronze	71714140	189.00
Brushed Black	71714340	189.00
Chrome		
Matt Black	71714670	176.40
Matt White	71714700	176.40
Polished Gold Optic	71714990	189.00



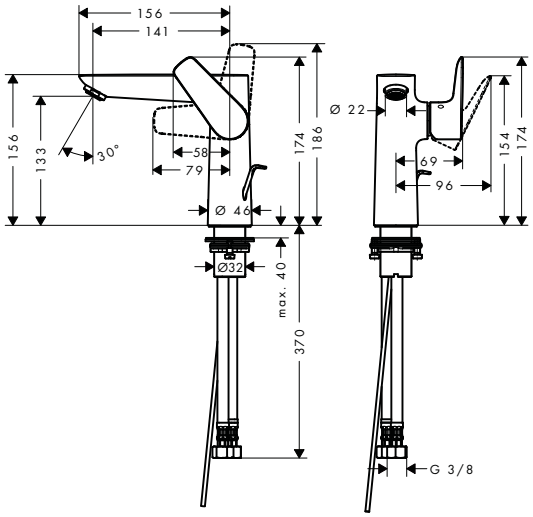

Single lever basin mixer 150 with pop-up waste set

- consists of: single lever basin mixer, waste set
- ComfortZone 150
- projection 141 mm
- normal spray
- flow rate at 3 bar: 5 l/min
- ceramic cartridge
- temperature limitation adjustable
- suitable for continuous flow water heaters
- pop-up waste set G 1¼
- material waste set: metal
- connection type: G ⅜ connections
- connection dimension: DN15

Chrome	71754000	205.20
Brushed Bronze	71754140	307.80
Brushed Black	71754340	307.80
Chrome		
Matt Black	71754670	287.30
Matt White	71754700	287.30
Polished Gold Optic	71754990	307.80

Air Power · Eco Smart · Quick Clean · Comfort Zone

Alternative products:

- Single lever basin mixer 150 without waste set

Chrome	71755000	198.20

Measurements within scale drawings are in mm.

Technical specifications and units of measure are subject to change.

	finish	code no.	Euro

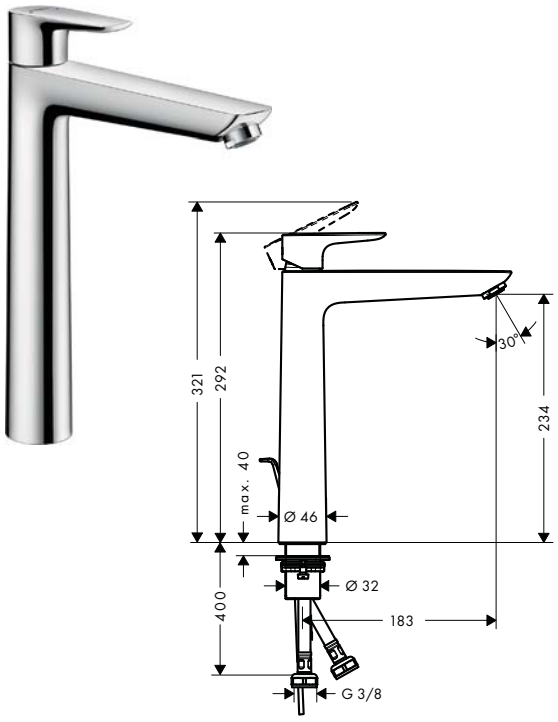

Single lever basin mixer 240 with pop-up waste set

- consists of: single lever basin mixer, waste set
- ComfortZone 240
- projection 183 mm
- normal spray
- flow rate at 3 bar: 5 l/min
- ceramic cartridge
- temperature limitation adjustable
- suitable for continuous flow water heaters
- pop-up waste set G 1¼
- material waste set: metal
- connection type: G ⅜ connections
- connection dimension: DN15

Chrome	71716000	222.30
Brushed Bronze	71716140	333.50
Brushed Black	71716340	333.50
Chrome		
Matt Black	71716670	311.20
Matt White	71716700	311.20
Polished Gold Optic	71716990	333.50

Air Power · Eco Smart · Quick Clean · Comfort Zone

Alternative products:

- Single lever basin mixer 240 without waste set

Chrome	71717000	216.60
Brushed Bronze	71717140	324.90
Brushed Black	71717340	324.90
Chrome		
Matt Black	71717670	303.20
Matt White	71717700	303.20
Polished Gold Optic	71717990	324.90



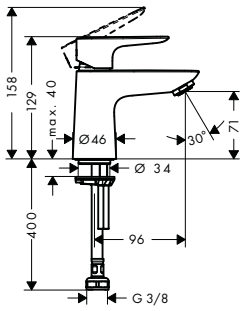

Pillar tap 80 for cold water

- ComfortZone 80
- projection 96 mm
- normal spray
- flow rate at 3 bar: 5 l/min
- ceramic cartridge
- for cold water connection
- connection type: G ⅜ connections
- connection dimension: DN15

Chrome	71706000	96.20

Air Power · Eco Smart · Quick Clean · Comfort Zone



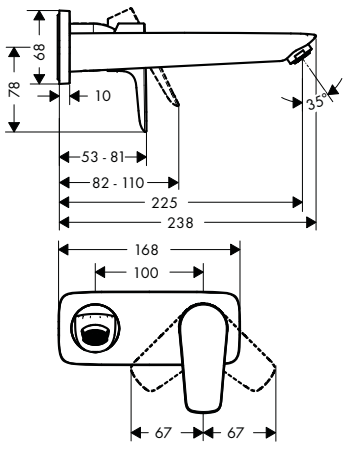

Single lever basin mixer for concealed installation wall-mounted with spout 22.5 cm

- consists of: single lever basin mixer for concealed installation wall-mounted, waste set
- projection 225 mm
- normal spray
- flow rate at 3 bar: 5 l/min
- ceramic cartridge
- temperature limitation adjustable
- suitable for continuous flow water heaters
- non-closing waste set
- material waste set: metal
- connection type: basic set
- connection dimension: DN15
- handle can be positioned on the right or left, depends on the basic set installation

Chrome	71734000	210.80
Brushed Bronze	71734140	316.20
Brushed Black	71734340	316.20
Chrome		
Matt Black	71734670	295.10
Matt White	71734700	295.10
Polished Gold Optic	71734990	316.20

Air Power · Eco Smart · Quick Clean

Alternative sizes:

- Single lever basin mixer for concealed installation wall-mounted with spout 16.5 cm

Chrome	71732000	186.70

Required parts:

- Basic set for single lever basin mixer for concealed installation wall-mounted

	13622180	210.00

Measurements within scale drawings are in mm.

Technical specifications and units of measure are subject to change.

	finish	code no.	Euro



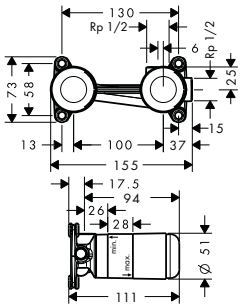

Basic set for single lever basin mixer for concealed installation wall-mounted

- variable positioning of the mixer system, can be left or right of the spout
- connection dimension: DN15

13622180 — 210.00

Optional parts:

- Extension set 2.5 cm — 31971000 — 105.40



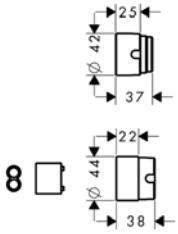

Extension set 2.5 cm

- extension length: 25 mm

31971000 — 105.40



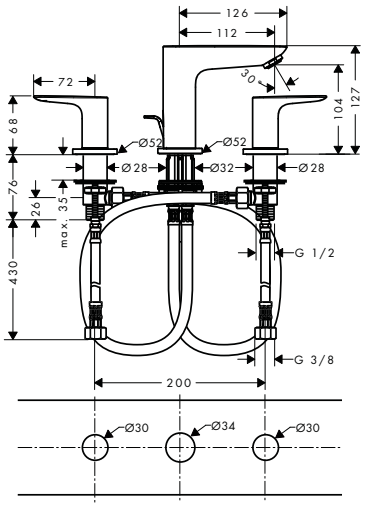

3-hole basin mixer with pop-up waste set

- consists of: 3-hole basin mixer, waste set
- ComfortZone 150
- projection 112 mm
- flow rate at 3 bar: 5 l/ min
- ceramic valves hot/ cold 90°
- suitable for continuous flow water heaters
- pop-up waste set G 1¼
- material waste set: metal
- connection type: G ⅜ connections
- connection dimension: DN15

Chrome	71733000	240.60
Brushed Bronze	71733140	360.90
Brushed Black	71733340	360.90
Chrome		
Matt Black	71733670	336.80
Matt White	71733700	336.80
Polished Gold Optic	71733990	360.90

Air Power · Eco Smart · Quick Clean · Comfort Zone

Bidet



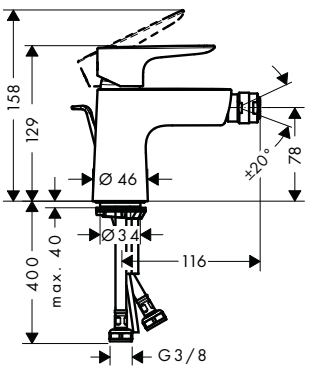

Single lever bidet mixer with pop-up waste set

- consists of: single lever bidet mixer, waste set
- projection 116 mm
- aerator with ball pivot
- normal spray
- flow rate at 3 bar: 5 l/ min
- ceramic cartridge
- temperature limitation adjustable
- suitable for continous flow water heaters
- material waste set: metal
- connection dimension: DN15

Chrome	71720000	132.90
Brushed Bronze	71720140	199.40
Brushed Black	71720340	199.40
Chrome		
Matt Black	71720670	186.10
Matt White	71720700	186.10
Polished Gold Optic	71720990	199.40

Air Power · Eco Smart · Quick Clean · Comfort Zone

Alternative products:

- Single lever bidet mixer with push-open waste set — Chrome — 71721000 — 132.90

Measurements within scale drawings are in mm.

Technical specifications and units of measure are subject to change.

	finish	code no.	Euro
Single lever basin mixer with bidette hand shower and shower hose 160 cm	Chrome	71729000	198.20



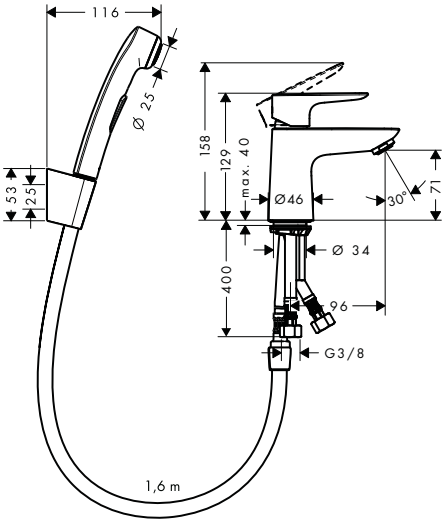

- consists of: single lever basin mixer, bidette hand shower, shower holder, shower hose, waste set
- flow rate at 3 bar: 5 l/min
- ceramic cartridge
- temperature limitation adjustable
- suitable for continuous flow water heaters
- push-open waste set G 1¼
- material waste set: metal
- connection type: G ⅜ connections
- connection dimension: DN15

Bath



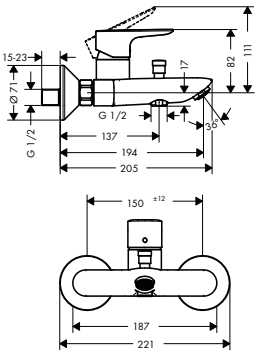

Single lever bath mixer for exposed installation	Chrome	71740000	174.10
	Brushed Bronze	71740140	261.20
	Brushed Black	71740340	261.20
	Chrome Matt Black	71740670	243.70
	Matt White	71740700	243.70
	Polished Gold Optic	71740990	261.20

- projection 194 mm
- connection type: s-shaped connections
- centre distance: 150 ± 12 mm
- spray type mixer: normal spray
- flow rate for bath spout at 3 bar: 19 l/min
- flow rate of hand shower at 3 bar: 17 l/min
- ceramic cartridge
- temperature limitation adjustable
- diverter with automatic resetting
- with silencer
- suitable for continous flow water heaters
- connection dimension: DN15



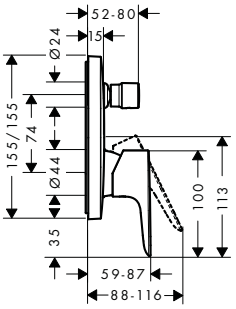

Single lever bath mixer for concealed installation	Chrome	71745000	144.30
	Brushed Bronze	71745140	216.50
	Brushed Black	71745340	216.50
	Chrome Matt Black	71745670	202.00
	Matt White	71745700	202.00
	Polished Gold Optic	71745990	216.50

- connection type: basic set
- ceramic cartridge
- temperature limitation adjustable
- diverter with automatic resetting
- with silencer

Alternative products:

· Single lever bath mixer for concealed installation with integrated security combination according to EN1717	Chrome	71474000	253.30
	Brushed Bronze	71474140	380.00
	Brushed Black	71474340	380.00
	Chrome Matt Black	71474670	354.60
	Matt White	71474700	354.60
	Polished Gold Optic	71474990	380.00

Required parts:

· Basic set iBox universal		01800180	130.80

Measurements within scale drawings are in mm.

Technical specifications and units of measure are subject to change.

	finish	code no.	Euro
 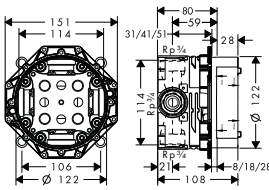	**Basic set iBox universal**	01800180	130.80
	· suitable for all shower, bath tub and thermostat finish sets for concealed installation · connection thread · Rp ¾ · rotationally-symmetric installation · sound-decoupled installation · connection dimension: DN20		
	Alternative products:		
	· Basic set iBox universal with shut-off unit	01850180	169.90
	Optional parts:		
	· Extension iBox universal basic set 2.5 cm	13595000	47.10
	· Fastening rail set for iBox universal	96615000	33.40
	· Assembly aid for iBox universal	93500000	12.20
 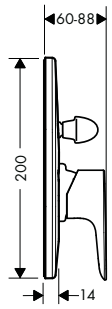	**Single lever bath mixer for concealed installation**	71746000	66.40
	· connection type: basic set · ceramic cartridge · temperature limitation adjustable · diverter with automatic resetting		
	Required parts:		
	· Basic set for single lever bath mixer for concealed installation	31741180	118.60
 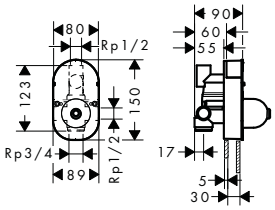	**Basic set for single lever bath mixer for concealed installation**	31741180	118.60
	· ceramic cartridge · connection dimension: DN15		
 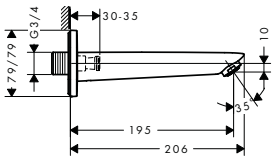	**Bath spout**	71410000	86.10
	· connection type: G ¾ · with escutcheon · projection 195 mm · wall-mounted · connection dimension: DN20 · spray type: normal spray		
 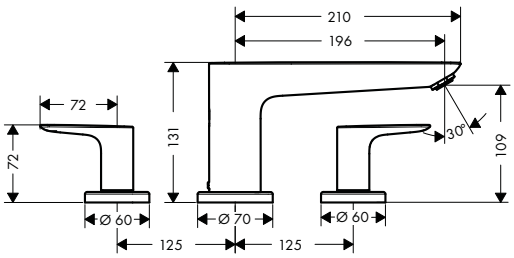	**3-hole rim mounted bath mixer**	71747000	229.10
	· projection 196 mm · ceramic cartridge · temperature limitation adjustable · non-return valve · with silencer		
	Required parts:		
	· Basic set for 3-hole rim mounted bath mixer	13233180	179.70

Measurements within scale drawings are in mm.

Technical specifications and units of measure are subject to change.

	finish	code no.	Euro
 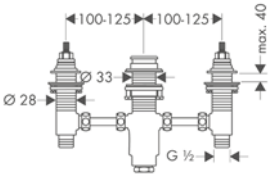			
Basic set for 3-hole rim mounted bath mixer · maintenance opening required · connection thread: G ½ · connection dimension: DN15 · ceramic valves hot/ cold 90°		13233180	179.70
 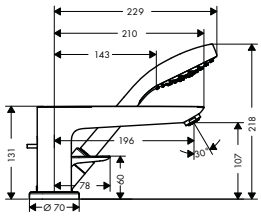 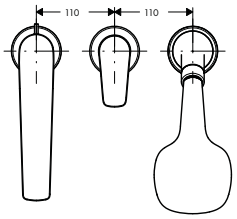			
3-hole rim mounted single lever bath mixer with Secuflex · consists of: 3-hole rim mounted single lever bath mixer, hand shower, Secuflex hose set · projection 196 mm · connection type: basic set · spray type mixer: normal spray · spray type hand shower: Rain · maximum pull-out length of hand shower: 1.10 m · flow rate at 3 bar: 20 l/ min · ceramic cartridge · temperature limitation adjustable · diverter with automatic resetting · non-return valve · connection dimension: DN15 **Consisting of:** · Hand shower 1jet (# 26814400) **Required parts:** · Basic set for 3-hole rim mounted single lever bath mixer	Chrome	71730000 13437180	505.20 653.90
 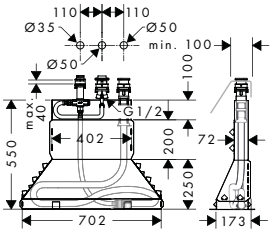			
Basic set for 3-hole rim mounted single lever bath mixer · consists of: basic set, shower hose, Secubox · maximum pull-out length of hand shower: 1.10 m · connection thread: G ½ · connection dimension: DN15 **Optional parts:** · Secuflex insert extension		13437180 98806000	653.90 3.80
 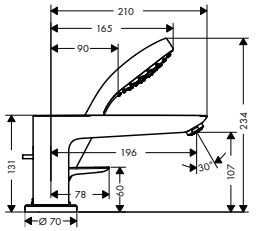 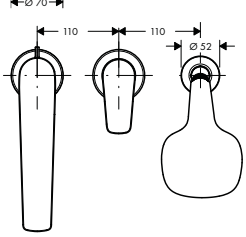			
3-hole rim mounted single lever bath mixer · consists of: 3-hole rim mounted single lever bath mixer, hand shower · projection 196 mm · spray type mixer: normal spray · spray type hand shower: Rain · maximum pull-out length of hand shower: 1.60 m · flow rate at 3 bar: 20 l/ min · ceramic cartridge · temperature limitation adjustable · diverter with automatic resetting · non-return valve · suitable for continous flow water heaters · connection dimension: DN15 **Consisting of:** · Hand shower 1jet (# 26814400) **Required parts:** · Basic set for 3-hole rim mounted single lever bath mixer	Chrome	71731000 13439180	360.90 333.40

Measurements within scale drawings are in mm.

Technical specifications and units of measure are subject to change.

	finish	code no.	Euro
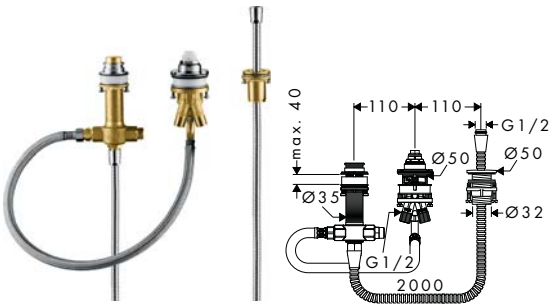			
Basic set for 3-hole rim mounted single lever bath mixer · consists of: basic set, shower holder, shower hose · maximum pull-out length of hand shower: 1.60 m · maintenance opening required · connection dimension: G ½ · ceramic cartridge		13439180	333.40
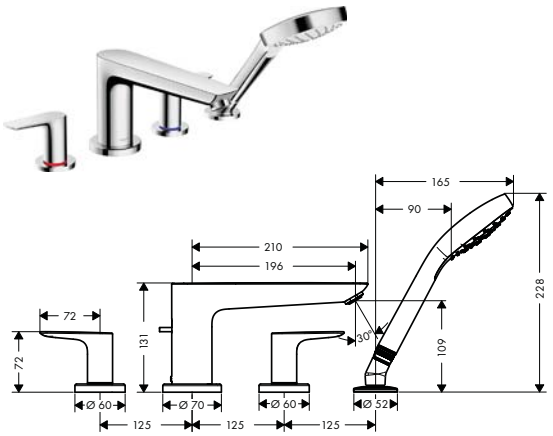			
4-hole rim mounted bath mixer · consists of: 4-hole rim mounted bath mixer, hand shower · projection 196 mm · maximum pull-out length of hand shower: 1.60 m · flow rate at 3 bar: 22 l/ min · non-return valve · connection dimension: DN15	Chrome Brushed Bronze Brushed Black Chrome Matt Black Matt White Polished Gold Optic	71748000 71748140 71748340 71748670 71748700 71748990	360.90 541.40 541.40 505.30 505.30 541.40
Required parts: · Basic set for 4-hole rim mounted bath mixer		13244180	275.20
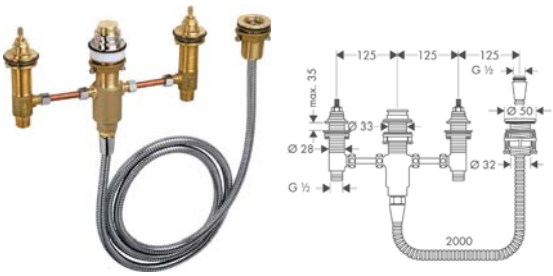			
Basic set for 4-hole rim mounted bath mixer · consists of: basic set, shower holder, shower hose · maximum pull-out length of hand shower: 1.60 m · maintenance opening required · suitable for 4-hole rim mounted bath mixer · connection thread: G ½ · connection dimension: DN15 · ceramic valves hot/ cold 90°		13244180	275.20

Shower

			
Single lever shower mixer for exposed installation · connection type: s-shaped connections · centre distance: 150 ± 12 mm · flow rate of hand shower at 3 bar: 17 l/ min · ceramic cartridge · temperature limitation adjustable · non-return valve · with silencer · hose connection DN15 · connection dimension: DN15	Chrome Brushed Bronze Brushed Black Chrome Matt Black Matt White Polished Gold Optic	71760000 71760140 71760340 71760670 71760700 71760990	150.10 225.20 225.20 210.10 210.10 225.20
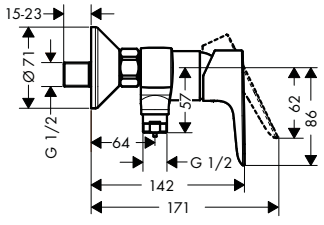			
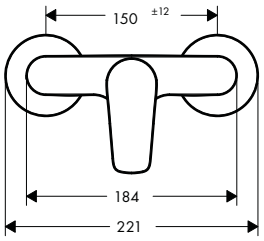			
Alternative products: · Single lever shower mixer for exposed installation with centre distance 15.3 cm	Chrome	71761000	168.50

Measurements within scale drawings are in mm.

Technical specifications and units of measure are subject to change.

	finish	code no.	Euro



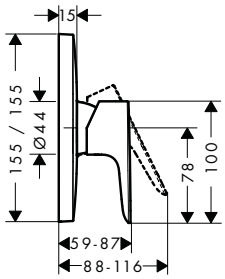

Single lever shower mixer for concealed installation

- 1 function
- connection type: basic set
- flow rate at 3 bar: 29.3 l/min
- ceramic cartridge
- temperature limitation adjustable

	Chrome	71765000	120.30
	Brushed Bronze	71765140	180.50
	Brushed Black Chrome	71765340	180.50
	Matt Black	71765670	168.40
	Matt White	71765700	168.40
	Polished Gold Optic	71765990	180.50

Alternative products:

· Single lever shower mixer HighFlow for concealed installation	Chrome	71768000	120.30

Required parts:

· Basic set iBox universal		01800180	130.80



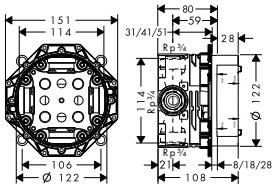

Basic set iBox universal

- suitable for all shower, bath tub and thermostat finish sets for concealed installation
- connection thread
- Rp ¾
- rotationally-symmetric installation
- sound-decoupled installation
- connection dimension: DN20

		01800180	130.80

Alternative products:

· Basic set iBox universal with shut-off unit		01850180	169.90

Optional parts:

· Extension iBox universal basic set 2.5 cm		13595000	47.10
· Fastening rail set for iBox universal		96615000	33.40
· Assembly aid for iBox universal		93500000	12.20



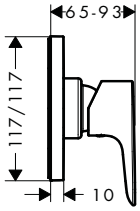

Single lever shower mixer for concealed installation

- 1 function
- connection type: basic set
- flow rate at 3 bar: 28.7 l/min
- min. operating pressure: 1 bar
- max. operating pressure: 10 bar

	Chrome	71764000	48.10

Required parts:

· Basic set for single lever shower mixer for concealed installation		13620180	105.30



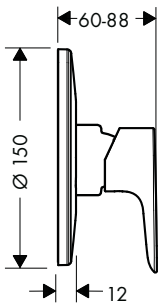

Single lever shower mixer for concealed installation

- connection type: basic set
- flow rate at 3 bar: 28.7 l/min
- min. operating pressure: 1 bar
- max. operating pressure: 10 bar

	Chrome	71766000	48.10

Required parts:

· Basic set for single lever shower mixer for concealed installation		13620180	105.30



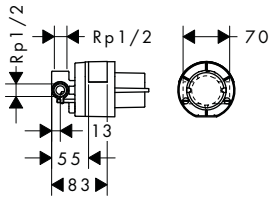

Basic set for single lever shower mixer for concealed installation

- ceramic cartridge
- connection dimension: DN15

		13620180	105.30

Measurements within scale drawings are in mm.

Possible combinations Talis Select S / Talis S

Basin


no.72115000*


no.72105000


no.72044000*


no.72031000*


no.72113000*


no.72042000*


no.72020000*


no.72040000*


no.72010000*


no.72017000


no.72111000*

Bath


no.72400000*


no.72405000*


no.72419000


no.72412000


no.15743000


no.15758000


no.13114000

Shower


no.72600000*


no.72605000*


no.13116000


no.15744000


no.15757000


no.26800400*


no.26522000, -400*


no.26570400*


no.27253400*

Accessories/kitchen mixers


no.40514000


no.40523000


no.40522000


no.72810000*


no.01800180

* as an example

Basin

	finish	code no.	Euro



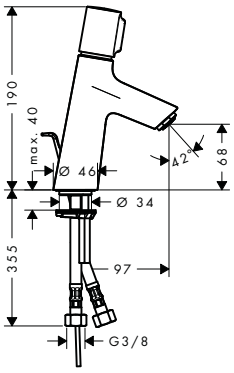

Basin mixer 80 with pop-up waste set

Chrome — 72040000 — 181.00

- consists of: Basin mixer, waste set
- ComfortZone 80
- projection 97 mm
- normal spray
- flow rate at 3 bar: 5 l/min
- Select cartridge with temperature control
- temperature limitation adjustable
- suitable for continuous flow water heaters
- pop-up waste set G 1¼
- material waste set: metal
- connection type: G ⅜ connections
- connection dimension: DN15

Alternative products:

- Basin mixer 80 without waste set — Chrome — 72041000 — 174.10



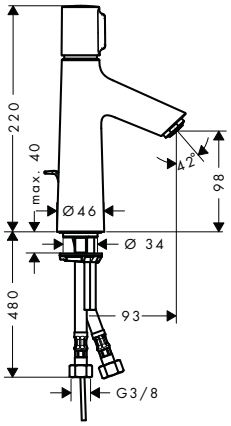

Basin mixer 100 with pop-up waste set

Chrome — 72042000 — 216.60

- consists of: Basin mixer, waste set
- ComfortZone 100
- projection 93 mm
- normal spray
- flow rate at 3 bar: 5 l/min
- Select cartridge with temperature control
- temperature limitation adjustable
- suitable for continuous flow water heaters
- pop-up waste set G 1¼
- material waste set: metal
- connection type: G ⅜ connections
- connection dimension: DN15

Alternative products:

- Basin mixer 100 without waste set — Chrome — 72043000 — 210.80



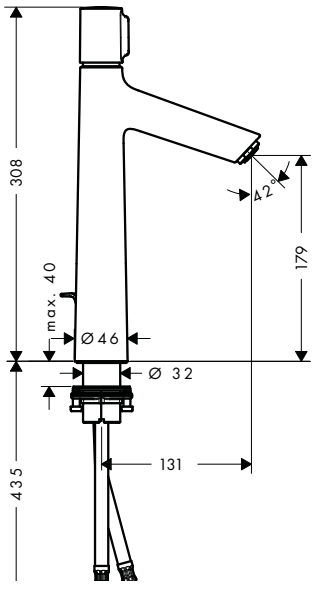

Basin mixer 190 with pop-up waste set

Chrome — 72044000 — 288.70

- consists of: Basin mixer, waste set
- ComfortZone 190
- projection 131 mm
- normal spray
- flow rate at 3 bar: 5 l/min
- Select cartridge with temperature control
- temperature limitation adjustable
- suitable for continuous flow water heaters
- pop-up waste set G 1¼
- material waste set: metal
- connection type: G ⅜ connections
- connection dimension: DN15

Alternative products:

- Basin mixer 190 without waste set — Chrome — 72045000 — 291.10

Measurements within scale drawings are in mm.

Technical specifications and units of measure are subject to change.

	finish	code no.	Euro

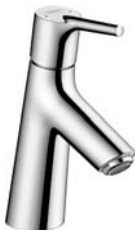

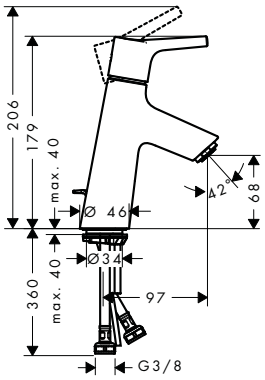

Single lever basin mixer 80 with pop-up waste set

Chrome 72010000 132.90

Air Power · Eco Smart · Quick Clean · Comfort Zone

- consists of: single lever basin mixer, waste set
- ComfortZone 80
- projection 97 mm
- normal spray
- flow rate at 3 bar: 5 l/min
- ceramic cartridge
- temperature limitation adjustable
- suitable for continuous flow water heaters
- pop-up waste set G 1¼
- material waste set: metal
- connection type: G ⅜ connections
- connection dimension: DN15

Alternative products:

· Single lever basin mixer 80 with push-open waste set	Chrome	72011000	132.90
· Single lever basin mixer 80 LowFlow with pop-up waste set	Chrome	72015000	132.90
· Single lever basin mixer 80 without waste set	Chrome	72012000	126.00
· Single lever basin mixer 80 LowFlow without waste set	Chrome	72018000	126.00



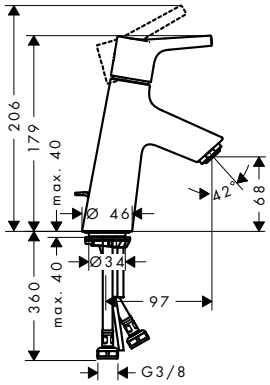

Single lever basin mixer 80 CoolStart with pop-up waste set

Chrome 72013000 132.90

Air Power · Eco Smart · Quick Clean · Comfort Zone · Cool Start

- consists of: single lever basin mixer, waste set
- ComfortZone 80
- projection 97 mm
- normal spray
- flow rate at 3 bar: 5 l/min
- ceramic cartridge
- temperature limitation adjustable
- suitable for continuous flow water heaters
- pop-up waste set G 1¼
- material waste set: metal
- connection type: G ⅜ connections
- connection dimension: DN15
- cold water in middle position

Alternative products:

· Single lever basin mixer 80 CoolStart without waste set	Chrome	72014000	126.00

Measurements within scale drawings are in mm.

Technical specifications and units of measure are subject to change.

	finish	code no.	Euro



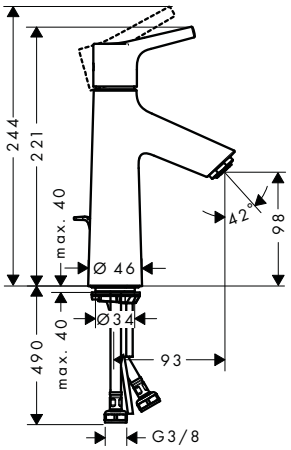

Single lever basin mixer 100 with pop-up waste set

- consists of: single lever basin mixer, waste set
- ComfortZone 100
- projection 93 mm
- normal spray
- flow rate at 3 bar: 5 l/min
- ceramic cartridge
- temperature limitation adjustable
- suitable for continuous flow water heaters
- pop-up waste set G 1¼
- material waste set: metal
- connection type: G ⅜ connections
- connection dimension: DN15

Air Power · Eco Smart · Quick Clean · Comfort Zone

	finish	code no.	Euro
	Chrome	72020000	157.00

Alternative products:

· Single lever basin mixer 100 LowFlow with pop-up waste set	Chrome	72024000	157.00
· Single lever basin mixer 100 without waste set	Chrome	72021000	150.10
· Single lever basin mixer 100 LowFlow without waste set	Chrome	72025000	150.10



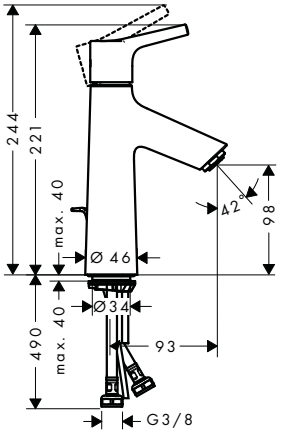

Single lever basin mixer 100 CoolStart with pop-up waste set

- consists of: single lever basin mixer, waste set
- ComfortZone 100
- projection 93 mm
- normal spray
- flow rate at 3 bar: 5 l/min
- ceramic cartridge
- temperature limitation adjustable
- suitable for continuous flow water heaters
- pop-up waste set G 1¼
- material waste set: metal
- connection type: G ⅜ connections
- connection dimension: DN15
- cold water in middle position

Air Power · Eco Smart · Quick Clean · Comfort Zone · Cool Start

	finish	code no.	Euro
	Chrome	72022000	157.00

Alternative products:

· Single lever basin mixer 100 CoolStart without waste set	Chrome	72023000	150.10



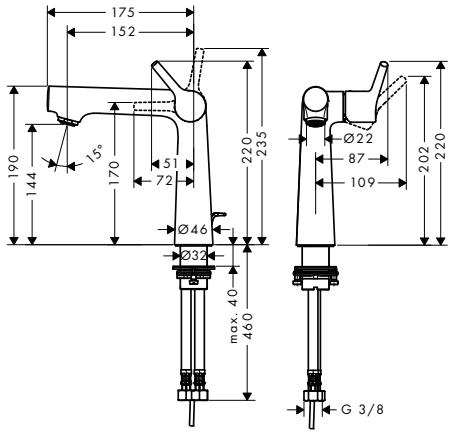

Single lever basin mixer 140 with pop-up waste set

- consists of: single lever basin mixer, waste set
- ComfortZone 140
- projection 152 mm
- normal spray
- flow rate at 3 bar: 5 l/min
- ceramic cartridge
- temperature limitation adjustable
- suitable for continuous flow water heaters
- pop-up waste set G 1¼
- material waste set: metal
- connection type: G ⅜ connections
- connection dimension: DN15

Air Power · Eco Smart · Quick Clean · Comfort Zone

	finish	code no.	Euro
	Chrome	72113000	421.70

Measurements within scale drawings are in mm.

Technical specifications and units of measure are subject to change.

	finish	code no.	Euro

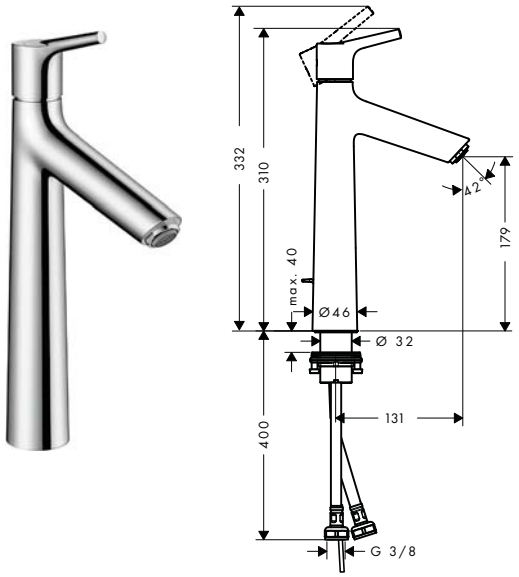

Single lever basin mixer 190 with pop-up waste set

- consists of: single lever basin mixer, waste set
- ComfortZone 190
- projection 131 mm
- normal spray
- flow rate at 3 bar: 5 l/min
- ceramic cartridge
- temperature limitation adjustable
- suitable for continuous flow water heaters
- pop-up waste set G 1¼
- material waste set: metal
- connection type: G ⅜ connections
- connection dimension: DN15

Chrome — 72031000 — 240.60

Alternative products:

- Single lever basin mixer 190 without waste set

Chrome — 72032000 — 234.80

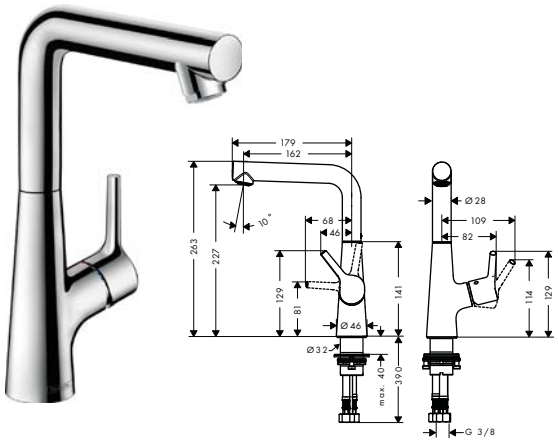

Single lever basin mixer 210 with swivel spout and pop-up waste set

- consists of: single lever basin mixer, waste set
- ComfortZone 210
- projection 162 mm
- swivel range 120°
- normal spray
- flow rate at 3 bar: 5 l/min
- ceramic cartridge
- temperature limitation adjustable
- suitable for continuous flow water heaters
- pop-up waste set G 1¼
- material waste set: metal
- connection type: G ⅜ connections
- connection dimension: DN15

Chrome — 72105000 — 264.60

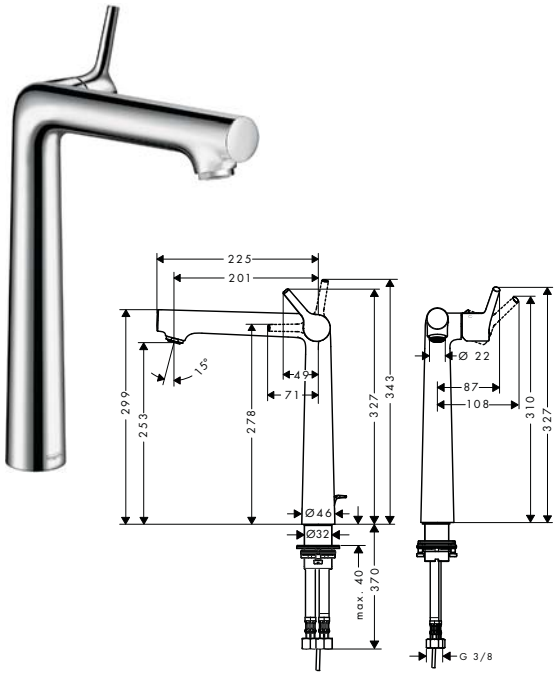

Single lever basin mixer 250 with pop-up waste set

- consists of: single lever basin mixer, waste set
- ComfortZone 250
- projection 201 mm
- normal spray
- flow rate at 3 bar: 5 l/min
- ceramic cartridge
- temperature limitation adjustable
- suitable for continuous flow water heaters
- pop-up waste set G 1¼
- material waste set: metal
- connection type: G ⅜ connections
- connection dimension: DN15

Chrome — 72115000 — 517.90

Alternative products:

- Single lever basin mixer 250 without waste set

Chrome — 72116000 — 510.90

Measurements within scale drawings are in mm.

Technical specifications and units of measure are subject to change.

	finish	code no.	Euro



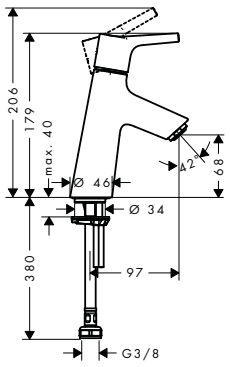

Pillar tap 80 for cold water

Chrome — 72017000 — 120.30

· ComfortZone 80
· projection 97 mm
· normal spray
· flow rate at 3 bar: 5 l/min
· ceramic cartridge
· for cold water connection
· connection type: G ⅜ connections
· connection dimension: DN15



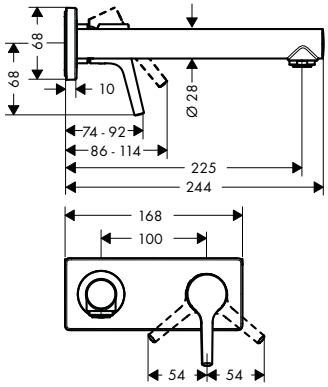

Single lever basin mixer for concealed installation wall-mounted with spout 22.5 cm

Chrome — 72111000 — 229.10

· consists of: single lever basin mixer for concealed installation wall-mounted, waste set
· projection 225 mm
· normal spray
· flow rate at 3 bar: 5 l/min
· ceramic cartridge
· temperature limitation adjustable
· suitable for continuous flow water heaters
· non-closing waste set
· material waste set: metal
· connection type: basic set
· connection dimension: DN15
· handle can be positioned on the right or left, depends on the basic set installation

Alternative sizes:

· Single lever basin mixer for concealed installation wall-mounted with spout 16.5 cm — Chrome — 72110000 — 205.20

Required parts:

· Basic set for single lever basin mixer for concealed installation wall-mounted — 13622180 — 210.00



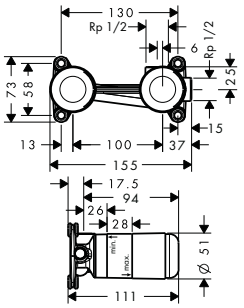

Basic set for single lever basin mixer for concealed installation wall-mounted

13622180 — 210.00

· variable positioning of the mixer system, can be left or right of the spout
· connection dimension: DN15

Optional parts:

· Extension set 2.5 cm — 31971000 — 105.40



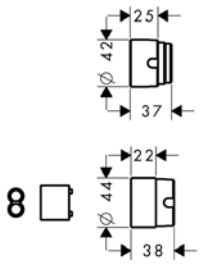

Extension set 2.5 cm

31971000 — 105.40

· extension length: 25 mm

Measurements within scale drawings are in mm.

Bidet

	finish	code no.	Euro



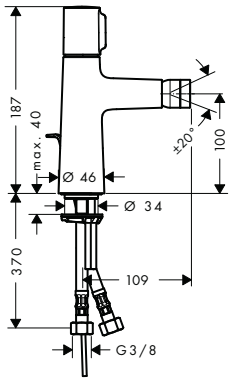

Bidet mixer with pop-up waste set

Chrome | 72202000 | 205.20

Select · Air Power · Quick Clean

- consists of: Bidet mixer, waste set
- aerator with ball pivot
- normal spray
- flow rate at 3 bar: 5 l/min
- Select cartridge with temperature control
- temperature limitation adjustable
- suitable for continous flow water heaters
- material waste set: metal
- connection dimension: DN15



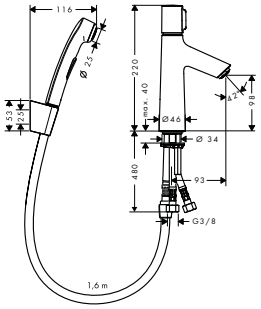

Basin mixer 100 with bidette hand shower and shower hose 160 cm

Chrome | 72291000 | 253.30

Select · Air Power · Eco Smart · Quick Clean

- consists of: Basin mixer, bidette hand shower, shower holder, shower hose, waste set
- flow rate at 3 bar: 5 l/min
- ceramic cartridge
- temperature limitation adjustable
- suitable for continuous flow water heaters
- push-open waste set G 1¼
- material waste set: synthetic
- connection type: G ⅜ connections
- connection dimension: DN15



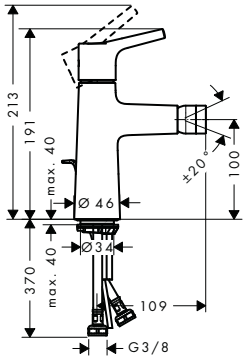

Single lever bidet mixer with pop-up waste set

Chrome | 72200000 | 157.00

Air Power · Quick Clean

- consists of: single lever bidet mixer, waste set
- projection 109 mm
- aerator with ball pivot
- normal spray
- flow rate at 3 bar: 5 l/min
- ceramic cartridge
- temperature limitation adjustable
- suitable for continous flow water heaters
- material waste set: metal
- connection dimension: DN15



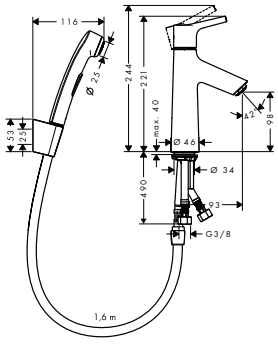

Single lever basin mixer with bidette hand shower and shower hose 160 cm

Chrome | 72290000 | 205.20

Air Power · Eco Smart · Quick Clean

- consists of: single lever basin mixer, bidette hand shower, shower holder, shower hose, waste set
- flow rate at 3 bar: 5 l/min
- ceramic cartridge
- temperature limitation adjustable
- suitable for continuous flow water heaters
- push-open waste set G 1¼
- material waste set: synthetic
- connection type: G ⅜ connections
- connection dimension: DN15

Measurements within scale drawings are in mm.

Technical specifications and units of measure are subject to change.

Bath

	finish	code no.	Euro



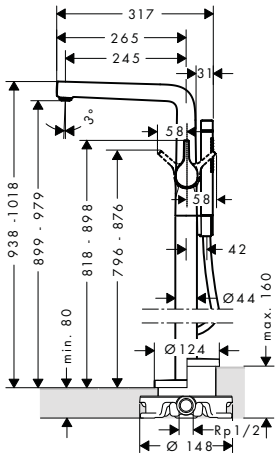

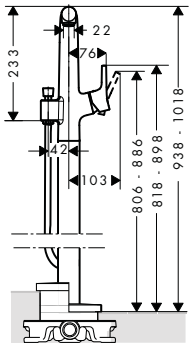

Single lever bath mixer floor-standing

Chrome — 72412000 — 1,512.20

Air Power — Quick Clean

- consists of: single lever bath mixer floor standing, baton hand shower, shower hose, shower holder
- projection 245 mm
- connection type: basic set
- spray type mixer: normal spray
- spray type hand shower: Rain, MonoRain
- flow rate at 3 bar: 20 l/min
- ceramic cartridge
- diverter with automatic resetting
- non-return valve
- connection dimension: DN15

Consisting of:

- Shower hose 125 cm (# 28272XXX)

Required parts:

- Basic set for mixers floor-standing — 10452180 — 437.90
- Sealing foil for basic set bath mixer floor-standing — 96441000 — 118.90



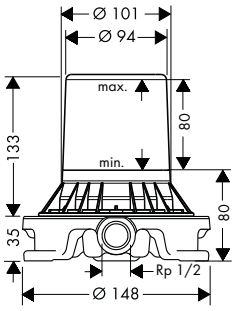

Basic set for mixers floor-standing

10452180 — 437.90

- for mounting on unfinished floor
- suitable for single lever bath mixer, single lever basin mixer and bath spout floor-standing
- connection dimension: DN15

Optional parts:

- Sealing foil for basic set bath mixer floor-standing — 96441000 — 118.90



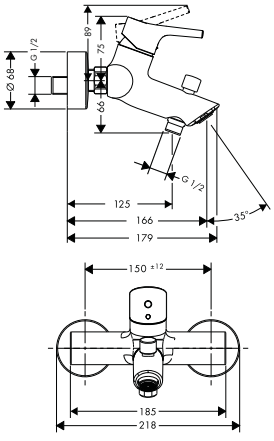

Single lever bath mixer for exposed installation

Chrome — 72400000 — 198.20

Air Power — Quick Clean

- projection 166 mm
- connection type: s-shaped connections
- centre distance: 150 ± 12 mm
- spray type mixer: normal spray
- flow rate for bath spout at 3 bar: 20 l/min
- flow rate of hand shower at 3 bar: 14 l/min
- ceramic cartridge
- temperature limitation adjustable
- diverter with automatic resetting
- intrinsically safe against backflow
- with silencer
- suitable for continous flow water heaters
- connection dimension: DN15

Alternative products:

- Single lever bath mixer for exposed installation with centre distance 15.3 cm — Chrome — 72401000 — 216.60

Measurements within scale drawings are in mm.

	finish	code no.	Euro
 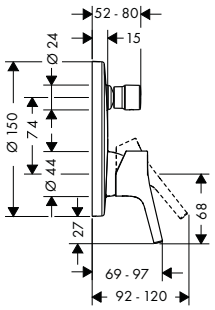			
Single lever bath mixer for concealed installation · connection type: basic set · ceramic cartridge · temperature limitation adjustable · diverter with automatic resetting · with silencer	Chrome	72405000	162.70
Alternative products: · Single lever bath mixer for concealed installation with integrated security combination according to EN1717	Chrome	72406000	277.30
Required parts: · Basic set iBox universal		01800180	130.80
Optional parts: · Extension element 15 cm	Chrome	13597000	44.70
 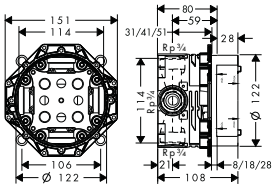			
Basic set iBox universal · suitable for all shower, bath tub and thermostat finish sets for concealed installation · connection thread · Rp ¾ · rotationally-symmetric installation · sound-decoupled installation · connection dimension: DN20		01800180	130.80
Alternative products: · Basic set iBox universal with shut-off unit		01850180	169.90
Optional parts: · Extension iBox universal basic set 2.5 cm · Fastening rail set for iBox universal · Assembly aid for iBox universal		13595000 96615000 93500000	47.10 33.40 12.20
 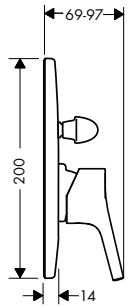			
Single lever bath mixer for concealed installation · connection type: basic set · ceramic cartridge · min. operating pressure: 1 bar · max. operating pressure: 10 bar · temperature limitation adjustable · diverter with automatic resetting	Chrome	72407000	72.20
Required parts: · Basic set for single lever bath mixer for concealed installation		31741180	118.60
 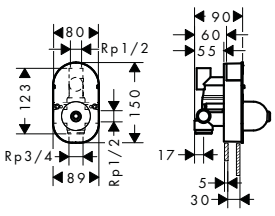			
Basic set for single lever bath mixer for concealed installation · ceramic cartridge · connection dimension: DN15		31741180	118.60

Measurements within scale drawings are in mm.

Technical specifications and units of measure are subject to change.

	finish	code no.	Euro
Bath spout · connection type: G ¾ · with silencer · with escutcheon · projection 175 mm · wall-mounted · connection dimension: DN20 · spray type: normal spray	Chrome	72410000	102.10
3-hole rim mounted single lever bath mixer with Secuflex · consists of: 3-hole rim mounted single lever bath mixer, hand shower, Secuflex hose set · projection 200 mm · spray type mixer: normal spray · spray type hand shower: Rain · maximum pull-out length of hand shower: 1.10 m · flow rate at 3 bar: 22 l/min · ceramic cartridge · temperature limitation adjustable · connection dimension: DN15 **Consisting of:** · Hand shower 1jet (# 26804400)	Chrome	72416000	541.80
Required parts: · Basic set for 3-hole rim mounted single lever bath mixer		13437180	653.90
Basic set for 3-hole rim mounted single lever bath mixer · consists of: basic set, shower hose, Secubox · maximum pull-out length of hand shower: 1.10 m · connection thread: G ½ · connection dimension: DN15		13437180	653.90
Optional parts: · Secuflex insert extension		98806000	3.80
3-hole rim mounted single lever bath mixer · consists of: 3-hole rim mounted single lever bath mixer, hand shower, shower holder · projection 200 mm · spray type mixer: normal spray · spray type hand shower: Rain · maximum pull-out length of hand shower: 1.60 m · flow rate at 3 bar: 22 l/min · ceramic cartridge · temperature limitation adjustable · connection dimension: DN15 **Consisting of:** · Hand shower 1jet (# 26804400)	Chrome	72417000	390.60
Required parts: · Basic set for 3-hole rim mounted single lever bath mixer		13439180	333.40

Measurements within scale drawings are in mm.

Technical specifications and units of measure are subject to change.

	finish	code no.	Euro
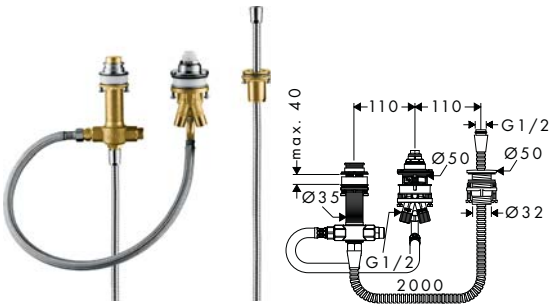			
Basic set for 3-hole rim mounted single lever bath mixer · consists of: basic set, shower holder, shower hose · maximum pull-out length of hand shower: 1.60 m · maintenance opening required · connection dimension: G ½ · ceramic cartridge		13439180	333.40
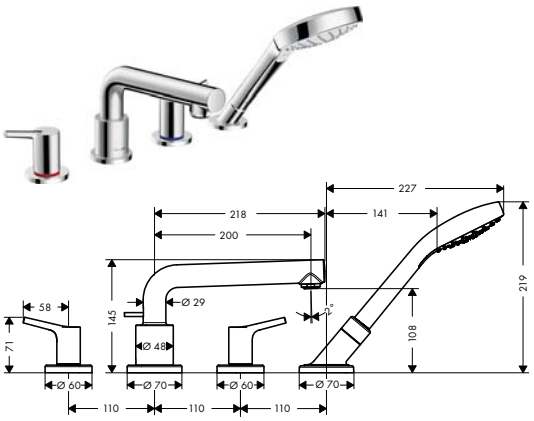			
4-hole rim mounted bath mixer with Secuflex · consists of: 4-hole rim mounted bath mixer, hand shower, shower holder · projection 200 mm · connection type: basic set · spray type mixer: normal spray · spray type hand shower: Rain · maximum pull-out length of hand shower: 1.10 m · flow rate at 3 bar: 22 l/ min · ceramic valves hot/ cold 90° · min. operating pressure: 1 bar · max. operating pressure: 10 bar · non-return valve · connection dimension: DN15	Chrome	72418000	541.80
Consisting of: · Hand shower 1jet (# 26804400)			
Required parts: · Basic set for 4-hole rim mounted bath mixer		13444180	798.10
 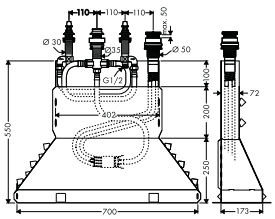			
Basic set for 4-hole rim mounted bath mixer · consists of: basic set, shower hose, Secubox · maximum pull-out length of hand shower: 1.10 m · connection dimension: DN15		13444180	798.10
Optional parts: · Secuflex insert extension		98806000	3.80
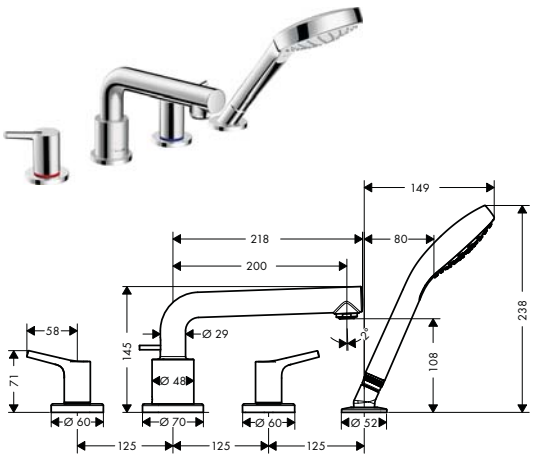			
4-hole rim mounted bath mixer · consists of: 4-hole rim mounted bath mixer, hand shower, shower holder · projection 200 mm · maximum pull-out length of hand shower: 1.60 m · flow rate at 3 bar: 22 l/ min · non-return valve · connection dimension: DN15 · with integrated safety combination EN1717	Chrome	72419000	390.60
Consisting of: · Hand shower 1jet (# 26804400)			
Required parts: · Basic set for 4-hole rim mounted bath mixer		13244180	275.20

Measurements within scale drawings are in mm.

Technical specifications and units of measure are subject to change.

	finish	code no.	Euro
 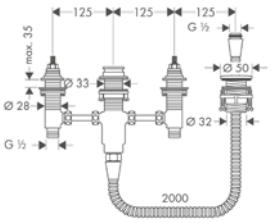			
Basic set for 4-hole rim mounted bath mixer · consists of: basic set, shower holder, shower hose · maximum pull-out length of hand shower: 1.60 m · maintenance opening required · suitable for 4-hole rim mounted bath mixer · connection thread: G ½ · connection dimension: DN15 · ceramic valves hot/ cold 90°		13244180	275.20
Shower			
 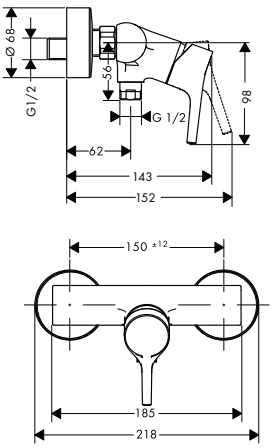			
Single lever shower mixer for exposed installation · connection type: s-shaped connections · centre distance: 150 ± 12 mm · flow rate of hand shower at 3 bar: 14 l/ min · ceramic cartridge · min. operating pressure: 1 bar · max. operating pressure: 10 bar · temperature limitation adjustable · non-return valve · with silencer · hose connection DN15 · connection dimension: DN15	Chrome	72600000	157.00
Alternative products:			
· Single lever shower mixer for exposed installation with centre distance 15.3 cm	Chrome	72601000	168.50
 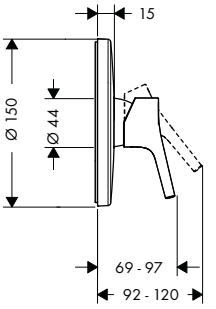			
Single lever shower mixer for concealed installation · 1 function · connection type: basic set · flow rate at 3 bar: 29.3 l/ min · ceramic cartridge · temperature limitation adjustable	Chrome	72605000	144.30
Required parts:			
· Basic set iBox universal		01800180	130.80
Optional parts:			
· Extension element 15 cm	Chrome	13597000	44.70
 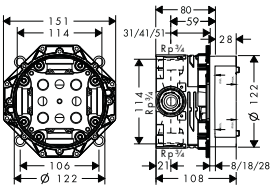			
Basic set iBox universal · suitable for all shower, bath tub and thermostat finish sets for concealed installation · connection thread · Rp ¾ · rotationally-symmetric installation · sound-decoupled installation · connection dimension: DN20		01800180	130.80
Alternative products:			
· Basic set iBox universal with shut-off unit		01850180	169.90
Optional parts:			
· Extension iBox universal basic set 2.5 cm		13595000	47.10
· Fastening rail set for iBox universal		96615000	33.40
· Assembly aid for iBox universal		93500000	12.20

Measurements within scale drawings are in mm.

		finish	code no.	Euro
	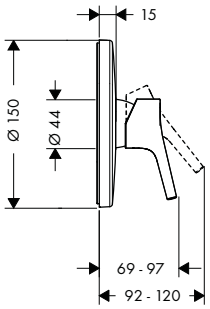	Single lever shower mixer for concealed installation · connection type: basic set	Chrome	72606000	48.10
		Required parts: · Basic set for single lever shower mixer for concealed installation		13620180	105.30
	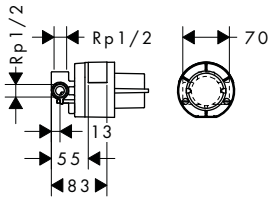	Basic set for single lever shower mixer for concealed installation · ceramic cartridge · connection dimension: DN15		13620180	105.30

Measurements within scale drawings are in mm.

Technical specifications and units of measure are subject to change.

Possible combinations Talis S

Basin


no.32070000*


no.32020000*


no.13132000

Bath


no.32420000


no.32475000*


no.13141000, -400


no.13114000


no.15721000*

Shower


no.32620000


no.32675000


no.13161000, -400


no.13116000


no.15701000*


no.28536000*


no.26464000*


no.27774000*


no.27185000

Accessories


no.40514000


no.40523000


no.40522000


no.01800180

* as an example

Basin

	finish	code no.	Euro



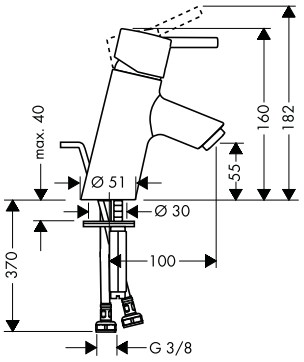

Single lever basin mixer with pop-up waste set

Chrome 32020000 200.20

Air Power · Eco Smart · Quick Clean · Comfort Zone

- consists of: single lever basin mixer, waste set
- ComfortZone 70
- projection 100 mm
- normal spray
- flow rate at 3 bar: 5 l/min
- ceramic cartridge
- temperature limitation adjustable
- suitable for continuous flow water heaters
- pop-up waste set G 1¼
- material waste set: metal
- connection type: G ⅜ connections
- connection dimension: DN15

Alternative products:

- Single lever basin mixer without waste set — Chrome 32031000 191.70
- Single lever basin mixer for vented hot water cylinder with pop-up waste set — Chrome 32032000 259.60



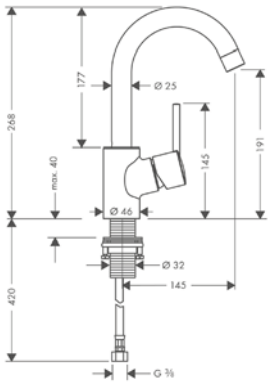

Single lever basin mixer 200 with swivel spout and pop-up waste set

Chrome 32070000 299.50

Air Power · Eco Smart · Quick Clean · Comfort Zone

- consists of: single lever basin mixer, waste set
- ComfortZone 200
- projection 145 mm
- swivel range 360°
- normal spray
- flow rate at 3 bar: 5 l/min
- ceramic cartridge
- temperature limitation adjustable
- suitable for continuous flow water heaters
- pop-up waste set G 1¼
- material waste set: metal
- connection type: G ⅜ connections
- connection dimension: DN15
- handle position on the side: bottom-side at the base body (not suitable for wash bowls)



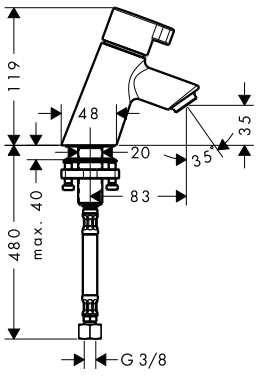

Pillar tap 40 without waste set

Chrome 13132000 138.70

Air Power · Eco Smart · Quick Clean · Comfort Zone

- ComfortZone 40
- projection 83 mm
- normal spray
- flow rate at 3 bar: 5 l/min
- ceramic valves 90°
- for cold water connection
- connection type: G ⅜ connections
- connection dimension: DN15

Measurements within scale drawings are in mm.

Technical specifications and units of measure are subject to change.

Bath

	finish	code no.	Euro



Single lever bath mixer for exposed installation

Chrome 32420000 253.50

Air Power · Quick Clean

- projection 172.5 - 180 mm
- connection type: s-shaped connections
- centre distance: 150 ± 12 mm
- spray type mixer: normal spray
- flow rate for bath spout at 3 bar: 18 l/min
- flow rate of hand shower at 3 bar: 19 l/min
- ceramic cartridge
- min. operating pressure: 1 bar
- max. operating pressure: 10 bar
- temperature limitation adjustable
- diverter with automatic resetting
- non-return valve
- with silencer
- suitable for continous flow water heaters
- connection dimension: DN15

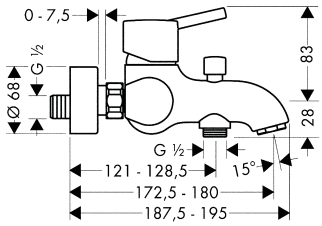



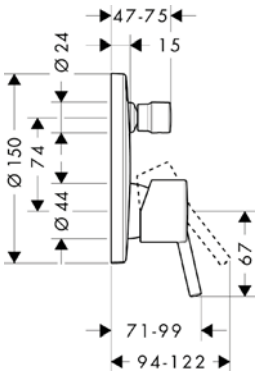

Single lever bath mixer for concealed installation

Chrome 32475000 172.50

- connection type: basic set
- ceramic cartridge
- min. operating pressure: 1 bar
- max. operating pressure: 10 bar
- temperature limitation adjustable
- diverter with automatic resetting
- with silencer

Alternative products:

- Single lever bath mixer for concealed installation with integrated security combination according to EN1717 — Chrome 32477000 307.20

Required parts:

- Basic set iBox universal — 01800180 130.80

Optional parts:

- Extension element 15 cm — Chrome 13597000 44.70



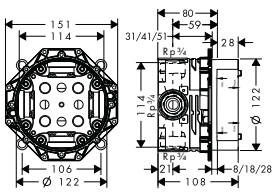

Basic set iBox universal

01800180 130.80

- suitable for all shower, bath tub and thermostat finish sets for concealed installation
- connection thread
- Rp ¾
- rotationally-symmetric installation
- sound-decoupled installation
- connection dimension: DN20

Alternative products:

- Basic set iBox universal with shut-off unit — 01850180 169.90

Optional parts:

- Extension iBox universal basic set 2.5 cm — 13595000 47.10
- Fastening rail set for iBox universal — 96615000 33.40
- Assembly aid for iBox universal — 93500000 12.20

Measurements within scale drawings are in mm.

Technical specifications and units of measure are subject to change.

	finish	code no.	Euro



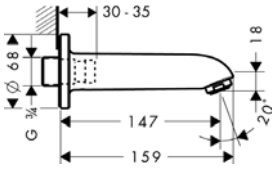

Bath spout

Chrome | 13414000 | 105.30

- with silencer
- with escutcheon
- projection 147 mm
- wall-mounted
- flow rate: 32 l/min
- connection dimension: DN20



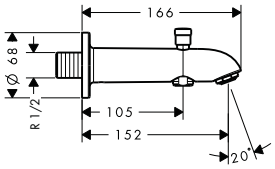

Bath spout 15.2 cm with diverter valve

Chrome | 13423000 | 107.70

- connection type: G ½
- with automatic resetting
- with escutcheon
- with integrated safety combination EN1717
- projection 152 mm
- wall-mounted
- flow rate: 25 l/min
- connection dimension: DN15
- intrinsically safe against backflow

Alternative sizes:

- Bath spout 22.8 cm with diverter valve — Chrome | 13424000 | 116.70

Shower



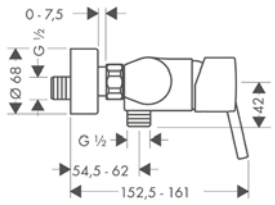

Single lever shower mixer for exposed installation

Chrome | 32620000 | 202.60

- 1 function
- connection type: s-shaped connections
- centre distance: 150 ± 12 mm
- flow rate of hand shower at 3 bar: 16 l/min
- ceramic cartridge
- min. operating pressure: 1 bar
- max. operating pressure: 10 bar
- temperature limitation adjustable
- non-return valve
- with silencer
- hose connection DN15
- connection dimension: DN15



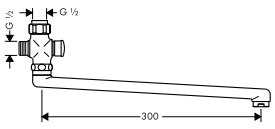

Long swivel spout 30 cm

Chrome | 14495000 | 94.80

- with automatic resetting
- length 300 mm
- connection dimension DN15
- for installation on single lever shower mixer

Measurements within scale drawings are in mm.

Technical specifications and units of measure are subject to change.

	finish	code no.	Euro
 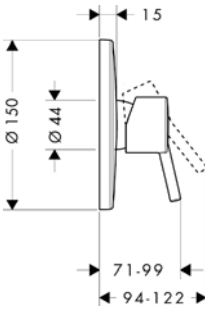			
Single lever shower mixer for concealed installation · 1 function · connection type: basic set · flow rate at 3 bar: 29.3 l/min · ceramic cartridge · min. operating pressure: 1 bar · max. operating pressure: 10 bar · temperature limitation adjustable	Chrome	32675000	160.80
Required parts:			
· Basic set iBox universal		01800180	130.80
Optional parts:			
· Extension element 15 cm	Chrome	13597000	44.70
 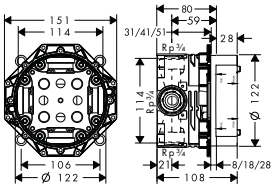			
Basic set iBox universal · suitable for all shower, bath tub and thermostat finish sets for concealed installation · connection thread · Rp ¾ · rotationally-symmetric installation · sound-decoupled installation · connection dimension: DN20		01800180	130.80
Alternative products:			
· Basic set iBox universal with shut-off unit		01850180	169.90
Optional parts:			
· Extension iBox universal basic set 2.5 cm		13595000	47.10
· Fastening rail set for iBox universal		96615000	33.40
· Assembly aid for iBox universal		93500000	12.20

Measurements within scale drawings are in mm.

Technical specifications and units of measure are subject to change.

Focus®



Basin	page 383		Focus Care	page 384	
Bidet	page 388		Bath	page 390	
Shower	page 394				

Possible combinations Focus

Focus

Basin


no.31609000*


no.31531000*


no.31608000*


no.31607000*


no.31730000*


no.31171000*

Bath


no.31940000


no.31945000*


no.13141000, -400


no.13114000


no.15758000*

Shower


no.31960000


no.31965000


no.13161000, -400


no.13116000


no.31572000*


no.26823400*


no.26577000, -400*


no.26656400*


no.27264400*

Accessories


no.40514000


no.40523000


no.40522000


no.01800180

* as an example

Basin

	finish	code no.	Euro



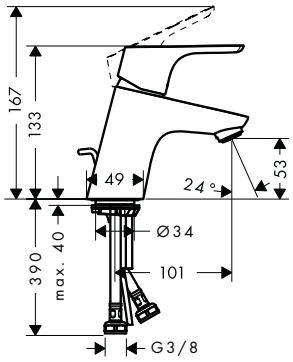

Single lever basin mixer 70 with pop-up waste set

Chrome — 31730000 — 105.30

Air Power · Eco Smart · Quick Clean · Comfort Zone

- consists of: single lever basin mixer, waste set
- ComfortZone 70
- projection 101 mm
- normal spray
- flow rate at 3 bar: 5 l/min
- ceramic cartridge
- temperature limitation adjustable
- suitable for continuous flow water heaters
- pop-up waste set G 1¼
- material waste set: metal
- connection type: G ⅜ connections
- connection dimension: DN15

Alternative products:

· Single lever basin mixer 70 with push-open waste set	Chrome	31604000	105.30
· Single lever basin mixer 70 with chain	Chrome	31732000	98.00
· Single lever basin mixer 70 without waste set	Chrome	31733000	98.00
· Single lever basin mixer 70 for vented hot water cylinders with pop-up waste set	Chrome	31132000	168.40
· Single lever basin mixer 70 LowFlow with pop-up waste set	Chrome	31951000	101.50
· Single lever basin mixer 70 LowFlow without waste set	Chrome	31952000	94.40
· Single lever basin mixer 70 CoolStart with pop-up waste set	Chrome	31539000	105.30



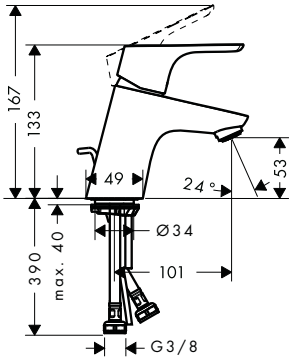

Single lever basin mixer 70 CoolStart with pop-up waste set

Chrome — 31539000 — 105.30

Air Power · Eco Smart · Quick Clean · Comfort Zone · Cool Start

- consists of: single lever basin mixer, waste set
- ComfortZone 70
- projection 101 mm
- normal spray
- flow rate at 3 bar: 5 l/min
- ceramic cartridge
- temperature limitation adjustable
- suitable for continuous flow water heaters
- pop-up waste set G 1¼
- material waste set: metal
- connection type: G ⅜ connections
- connection dimension: DN15
- cold water in middle position

Alternative products:

· Single lever basin mixer 70 with pop-up waste set	Chrome	31730000	105.30



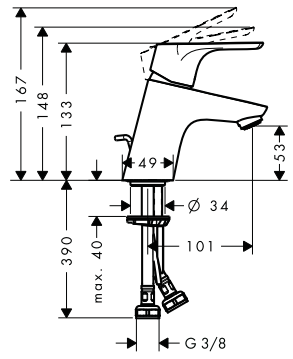

Single lever basin mixer 70 with 2 flow rates with pop-up waste set

Chrome — 31738000 — 105.30

Air Power · Eco Smart · Quick Clean · Comfort Zone · Cool Start

- consists of: single lever basin mixer, waste set
- ComfortZone 70
- projection 101 mm
- normal spray
- ceramic cartridge with 2 flow rates
- temperature limitation adjustable
- suitable for continuous flow water heaters
- pop-up waste set G 1¼
- material waste set: metal
- connection type: G ⅜ connections
- connection dimension: DN15
- cold water in middle position

Measurements within scale drawings are in mm.

Technical specifications and units of measure are subject to change.

	finish	code no.	Euro



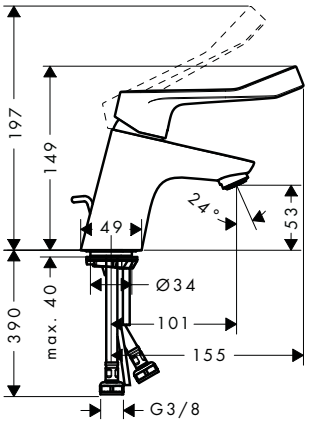

Single lever basin mixer 70 with extra long handle and pop-up waste set

Chrome	31910000	115.60

Eco Smart · Comfort Zone

- consists of: single lever basin mixer, waste set
- ComfortZone 70
- larger print for greater clarity
- with extra long barrier-free handle
- projection 101 mm
- laminar spray
- flow rate at 3 bar: 5 l/min
- ceramic cartridge
- temperature limitation adjustable
- suitable for continuous flow water heaters
- pop-up waste set G 1¼
- material waste set: metal
- connection type: G ⅜ connections
- connection dimension: DN15

Alternative products:

· Single lever basin mixer 70 with extra long handle without waste set	Chrome	31914000	109.70



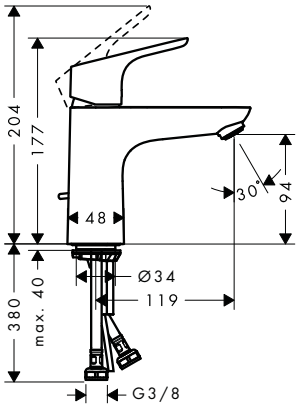

Single lever basin mixer 100 with pop-up waste set

Chrome	31607000	129.50

Air Power · Eco Smart · Quick Clean · Comfort Zone

- consists of: single lever basin mixer, waste set
- ComfortZone 100
- projection 119 mm
- normal spray
- flow rate at 3 bar: 5 l/min
- ceramic cartridge
- temperature limitation adjustable
- suitable for continuous flow water heaters
- pop-up waste set G 1¼
- material waste set: metal
- connection type: G ⅜ connections
- connection dimension: DN15

Alternative products:

· Single lever basin mixer 100 without waste set	Chrome	31517000	123.00
· Single lever basin mixer 100 LowFlow with pop-up waste set	Chrome	31603000	124.70
· Single lever basin mixer 100 LowFlow without waste set	Chrome	31513000	118.60



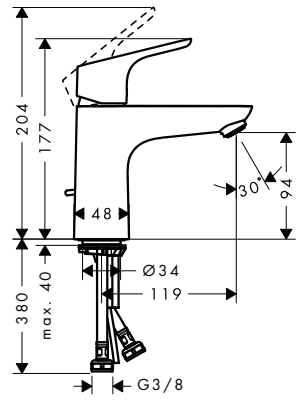

Single lever basin mixer 100 CoolStart with pop-up waste set

Chrome	31621000	129.50

Air Power · Eco Smart · Quick Clean · Comfort Zone · Cool Start

- consists of: single lever basin mixer, waste set
- ComfortZone 100
- projection 119 mm
- normal spray
- flow rate at 3 bar: 5 l/min
- ceramic cartridge
- temperature limitation adjustable
- suitable for continuous flow water heaters
- pop-up waste set G 1¼
- material waste set: metal
- connection type: G ⅜ connections
- connection dimension: DN15
- cold water in middle position

Alternative products:

· Single lever basin mixer 100 CoolStart without waste set	Chrome	31509000	123.00

Measurements within scale drawings are in mm.

Technical specifications and units of measure are subject to change.

	finish	code no.	Euro



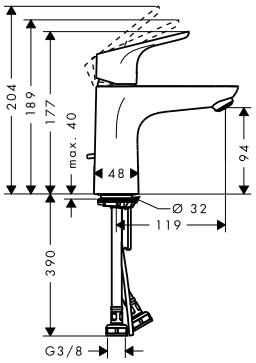

Single lever basin mixer 100 with 2 flow rates with pop-up waste set

Chrome 31657000 129.50

Air Power · Eco Smart · Quick Clean · Comfort Zone · Cool Start

- consists of: single lever basin mixer, waste set
- ComfortZone 100
- projection 119 mm
- normal spray
- ceramic cartridge with 2 flow rates
- temperature limitation adjustable
- suitable for continuous flow water heaters
- pop-up waste set G 1¼
- material waste set: metal
- connection type: G ⅜ connections
- connection dimension: DN15
- cold water in middle position



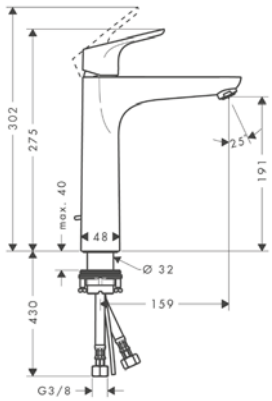

Single lever basin mixer 190 with pop-up waste set

Chrome 31608000 155.40

Air Power · Eco Smart · Quick Clean · Comfort Zone

- consists of: single lever basin mixer, waste set
- ComfortZone 190
- projection 159 mm
- normal spray
- flow rate at 3 bar: 5 l/min
- ceramic cartridge
- temperature limitation adjustable
- suitable for continuous flow water heaters
- pop-up waste set G 1¼
- material waste set: metal
- connection type: G ⅜ connections
- connection dimension: DN15

Alternative products:

- Single lever basin mixer 190 without waste set — Chrome 31518000 149.00



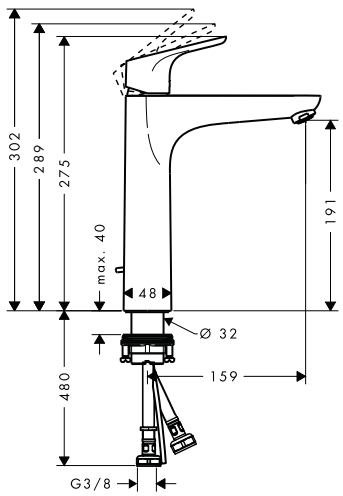

Single lever basin mixer 190 with 2 flow rates with pop-up waste set

Chrome 31658000 155.40

Air Power · Eco Smart · Quick Clean · Comfort Zone

- consists of: single lever basin mixer, waste set
- ComfortZone 190
- projection 159 mm
- normal spray
- ceramic cartridge with 2 flow rates
- temperature limitation adjustable
- suitable for continuous flow water heaters
- pop-up waste set G 1¼
- material waste set: metal
- connection type: G ⅜ connections
- connection dimension: DN15

Measurements within scale drawings are in mm.

Technical specifications and units of measure are subject to change.

	finish	code no.	Euro

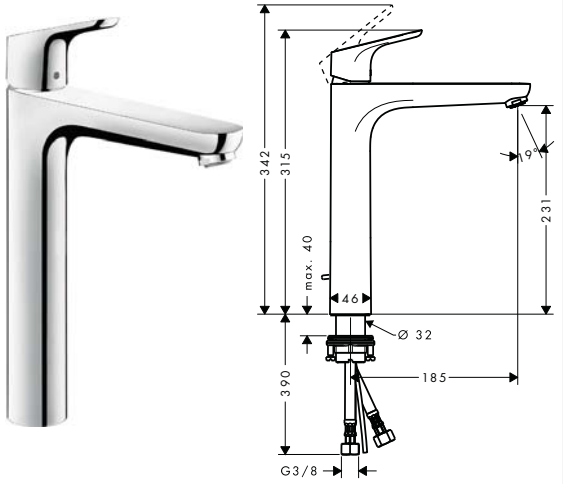

Single lever basin mixer 230 with pop-up waste set

- consists of: single lever basin mixer, waste set
- ComfortZone 230
- projection 185 mm
- normal spray
- flow rate at 3 bar: 5 l/min
- ceramic cartridge
- temperature limitation adjustable
- suitable for continuous flow water heaters
- pop-up waste set G 1¼
- material waste set: metal
- connection type: G ⅜ connections
- connection dimension: DN15

	finish	code no.	Euro
	Chrome	31531000	184.90

Alternative products:

	finish	code no.	Euro
· Single lever basin mixer 230 without waste set	Chrome	31532000	179.60



Single lever basin mixer 240 with swivel spout and pop-up waste set

- consists of: single lever basin mixer, waste set
- ComfortZone 240
- projection 160 mm
- swivel range 120°
- normal spray
- flow rate at 3 bar: 5 l/min
- ceramic cartridge
- temperature limitation adjustable
- suitable for continuous flow water heaters
- pop-up waste set G 1¼
- material waste set: metal
- connection type: G ⅜ connections
- connection dimension: DN15
- handle position on the side: bottom-side at the base body (not suitable for wash bowls)

	finish	code no.	Euro
	Chrome	31609000	187.80

Alternative products:

	finish	code no.	Euro
· Single lever basin mixer 240 with swivel spout without waste set	Chrome	31519000	181.40

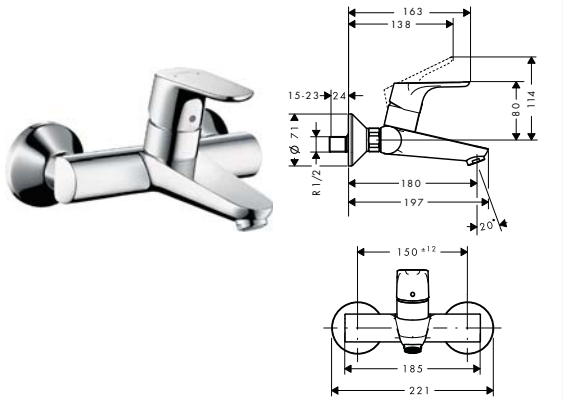

Single lever basin mixer for exposed installation wall-mounted

- projection 180 mm
- centre distance: 150 ± 12 mm
- normal spray
- flow rate at 3 bar: 5 l/min
- ceramic cartridge
- temperature limitation adjustable
- with noise reduction
- suitable for continuous flow water heaters
- connection type: s-shaped connections
- connection dimension: DN15

	finish	code no.	Euro
	Chrome	31923000	134.50

Measurements within scale drawings are in mm.

Technical specifications and units of measure are subject to change.

	finish	code no.	Euro



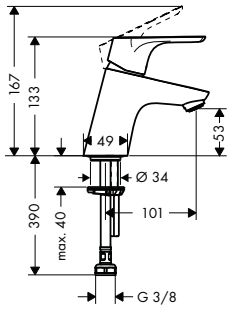

Pillar tap 70 without waste set

Chrome 31130000 97.10

Air Power · Eco Smart · Quick Clean · Comfort Zone

- ComfortZone 70
- projection 101 mm
- normal spray
- flow rate at 3 bar: 5 l/min
- ceramic cartridge
- for cold water connection
- connection type: G ⅜ connections
- connection dimension: DN15



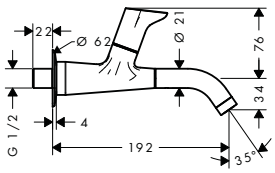

Tap wall-mounted without waste set

Chrome 31131000 123.30

Air Power · Eco Smart

- projection 195 mm
- normal spray
- flow rate at 3 bar: 5 l/min
- ceramic valves 90°
- for cold water connection
- connection type: G ½
- connection dimension: DN15



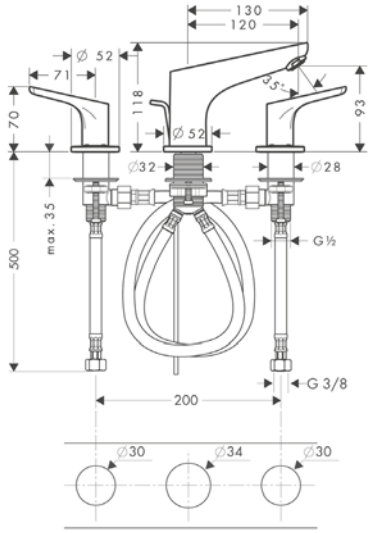

3-hole basin mixer 100 with pop-up waste set

Chrome 31937000 246.60

Air Power · Eco Smart · Quick Clean · Comfort Zone

- consists of: 3-hole basin mixer, waste set
- ComfortZone 100
- flow rate at 3 bar: 5 l/min
- ceramic valves hot/ cold 90°
- suitable for continuous flow water heaters
- pop-up waste set G 1¼
- material waste set: metal
- connection type: G ⅜ connections
- connection dimension: DN15

Measurements within scale drawings are in mm.

Technical specifications and units of measure are subject to change.

	finish	code no.	Euro
Electronic basin mixer 130 with temperature control battery operation	Chrome	31171000	472.70



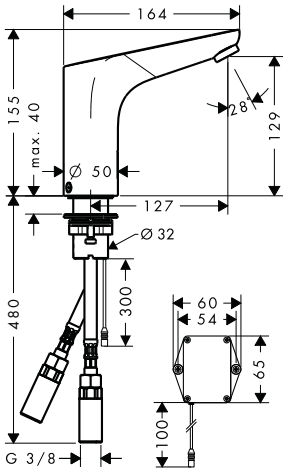

- ComfortZone 130
- projection 127 mm
- flow rate at 3 bar: 5 l/min
- theft-proof aerator
- temperature limitation adjustable
- temperature adjustable via mixer lever on the side
- non-return valve
- suitable for continous flow water heaters
- infrared sensor technology
- automatic environmental adjustment of infrared sensor
- adjustable optical range of infrared sensor (2 settings)
- battery condition indicator available
- battery operation 6 V (Lithium battery, lifetime approx. 2 years, battery included in scope of delivery)
- hygiene rinse activatable (automatic water flow for 10 seconds every 24 hours following the last operation)
- permanent rinse activatable (single water flow for 180 seconds, suitable for thermal disinfection)
- manual water stop for washbasin cleaning
- performance may be impaired if the sensor is obscured by the design of the wash basin, or when the wash basin is oversized and the distance between sensor and the wash basin edge is larger than 75 mm
- functional restriction due to too large distance
- connection dimension: DN15
- TÜV certified
- dirt filters in the connection hoses
- two filter units with fine filter to protect from incoming dirt, for assembly on existing angle valves, filter element can be removed and cleaned

Alternative products:

· Electronic basin mixer with temperature pre-adjustment battery operation	Chrome	31172000	429.00
· Electronic basin mixer 130 with temperature control mains connection 230 V	Chrome	31173000	494.70
· Electronic basin mixer with temperature pre-adjustment mains connection 230 V	Chrome	31174000	473.30

Bidet

Single lever bidet mixer with pop-up waste set	Chrome	31920000	105.30



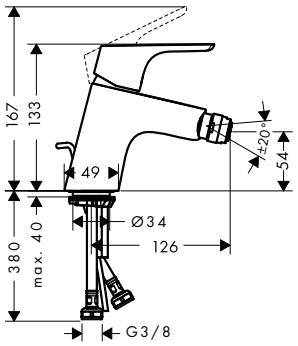

- consists of: single lever bidet mixer, waste set
- projection 126 mm
- aerator with ball pivot
- normal spray
- flow rate at 3 bar: 7.2 l/min
- ceramic cartridge
- temperature limitation adjustable
- suitable for continous flow water heaters
- material waste set: metal
- connection dimension: DN15

Alternative products:

· Single lever bidet mixer with push-open waste set	Chrome	31922000	105.30

Measurements within scale drawings are in mm.

Technical specifications and units of measure are subject to change.

	finish	code no.	Euro



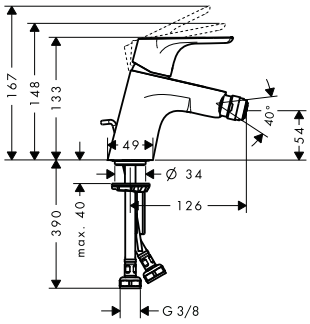

Single lever bidet mixer with 2 flow rates with pop-up waste set

Chrome | 31928000 | 105.30

Air Power | Quick Clean

- consists of: single lever bidet mixer, waste set
- projection 126 mm
- aerator with ball pivot
- normal spray
- ceramic cartridge with 2 flow rates
- temperature limitation adjustable
- suitable for continous flow water heaters
- material waste set: metal
- connection dimension: DN15



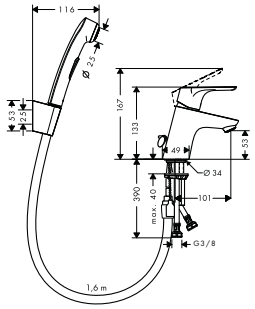

Single lever basin mixer 70 with bidette hand shower and shower hose 160 cm

Chrome | 31926000 | 122.80

Air Power | Eco Smart | Quick Clean

- consists of: single lever basin mixer, bidette hand shower, shower holder, shower hose
- flow rate at 3 bar: 5 l/min
- ceramic cartridge
- temperature limitation adjustable
- suitable for continuous flow water heaters
- connection type: G ⅜ connections
- connection dimension: DN15



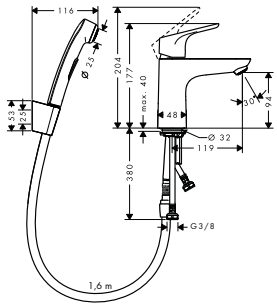

Single lever basin mixer 100 with bidette hand shower and shower hose 160 cm

Chrome | 31927000 | 147.70

Air Power | Eco Smart | Quick Clean

- consists of: single lever basin mixer, bidette hand shower, shower holder, shower hose, waste set
- projection 119 mm
- normal spray
- spray type Bidette: shower spray
- flow rate at 3 bar: 5 l/min
- ceramic cartridge
- temperature limitation adjustable
- suitable for continuous flow water heaters
- push-open waste set G 1¼
- connection type: G ⅜ connections
- connection dimension: DN15



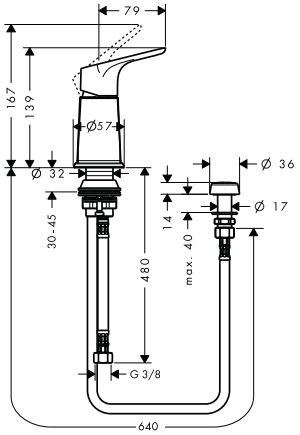

Bidet set with vertical spray

Chrome | 31629000 | 126.50

Eco Smart

- consists of: Bidet mixer, vertical spray
- ceramic cartridge
- vertical spray and diverter
- integrated non-return valve
- efficient from 0.05 MPa onwards
- connection dimension: DN15

Measurements within scale drawings are in mm.

Technical specifications and units of measure are subject to change.

Bath

	finish	code no.	Euro



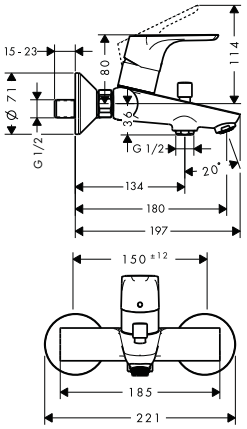

Single lever bath mixer for exposed installation

Chrome — 31940000 — 129.50

Air Power · Quick Clean

- projection 172 - 179.5 mm
- connection type: s-shaped connections
- centre distance: 150 ± 12 mm
- spray type mixer: normal spray
- flow rate for bath spout at 3 bar: 22 l/min
- flow rate of hand shower at 3 bar: 26 l/min
- ceramic cartridge
- min. operating pressure: 1 bar
- max. operating pressure: 10 bar
- temperature limitation adjustable
- diverter with automatic resetting
- intrinsically safe against backflow
- with silencer
- suitable for continous flow water heaters
- connection dimension: DN15

Alternative products:

- Single lever bath mixer for exposed installation with 2 flow rates — Chrome — 31948000 — 129.50



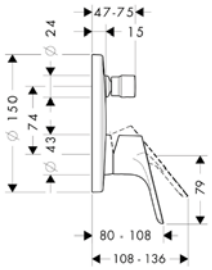

Single lever bath mixer for concealed installation

Chrome — 31945000 — 131.20

- connection type: basic set
- ceramic cartridge
- min. operating pressure: 1 bar
- max. operating pressure: 10 bar
- temperature limitation adjustable
- diverter with automatic resetting
- with silencer

Alternative products:

- Single lever bath mixer for concealed installation with integrated security combination according to EN1717 — Chrome — 31946000 — 200.60

Required parts:

- Basic set iBox universal — 01800180 — 130.80

Optional parts:

- Extension element 15 cm — Chrome — 13597000 — 44.70



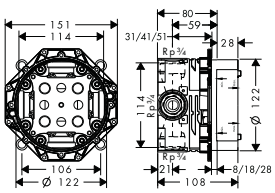

Basic set iBox universal

01800180 — 130.80

- suitable for all shower, bath tub and thermostat finish sets for concealed installation
- connection thread
- Rp ¾
- rotationally-symmetric installation
- sound-decoupled installation
- connection dimension: DN20

Alternative products:

- Basic set iBox universal with shut-off unit — 01850180 — 169.90

Optional parts:

- Extension iBox universal basic set 2.5 cm — 13595000 — 47.10
- Fastening rail set for iBox universal — 96615000 — 33.40
- Assembly aid for iBox universal — 93500000 — 12.20

Measurements within scale drawings are in mm.

Technical specifications and units of measure are subject to change.

	finish	code no.	Euro
 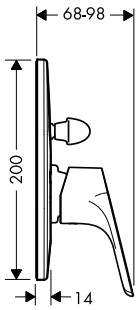			
Single lever bath mixer for concealed installation · connection type: basic set · ceramic cartridge · min. operating pressure: 1 bar · max. operating pressure: 10 bar · temperature limitation adjustable · diverter with automatic resetting	Chrome	31947000	48.00
Required parts: · Basic set for single lever bath mixer for concealed installation		31741180	118.60
 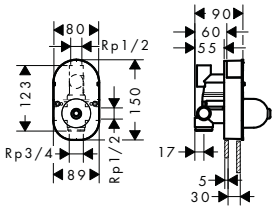			
Basic set for single lever bath mixer for concealed installation · ceramic cartridge · connection dimension: DN15		31741180	118.60
 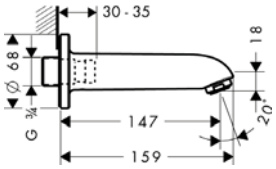			
Bath spout · with silencer · with escutcheon · projection 147 mm · wall-mounted · flow rate: 32 l/min · connection dimension: DN20	Chrome	13414000	105.30
 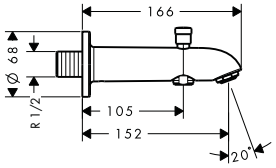			
Bath spout 15.2 cm with diverter valve · connection type: G ½ · with automatic resetting · with escutcheon · with integrated safety combination EN1717 · projection 152 mm · wall-mounted · flow rate: 25 l/min · connection dimension: DN15 · intrinsically safe against backflow	Chrome	13423000	107.70
Alternative sizes: · Bath spout 22.8 cm with diverter valve	Chrome	13424000	116.70

Measurements within scale drawings are in mm.

Technical specifications and units of measure are subject to change.

	finish	code no.	Euro



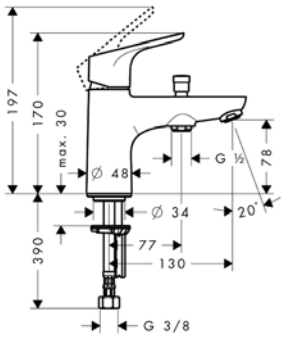

Single lever bath and shower mixer Monotrou

Chrome 31930000 136.80

Air Power Quick Clean

- projection 130 mm
- connection type: G ⅜ connections
- spray type mixer: normal spray
- flow rate at 3 bar: 20 l/ min
- ceramic cartridge
- min. operating pressure: 1 bar
- max. operating pressure: 10 bar
- temperature limitation adjustable
- diverter with automatic resetting
- intrinsically safe against backflow
- suitable for continous flow water heaters
- connection dimension: DN15

Alternative products:

- Single lever bath and shower mixer Monotrou with 2 flow rates — Chrome 31938000 136.80



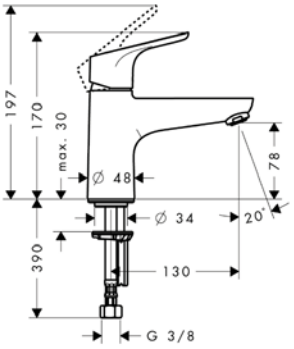

Single lever bath mixer Monotrou

Chrome 31931000 127.70

Air Power Quick Clean

- projection 130 mm
- connection type: G ⅜ connections
- spray type mixer: normal spray
- flow rate at 3 bar: 20 l/ min
- ceramic cartridge
- min. operating pressure: 1 bar
- max. operating pressure: 10 bar
- temperature limitation adjustable
- suitable for continous flow water heaters
- connection dimension: DN15



2-hole rim mounted bath mixer

Chrome 31523000 250.70

Air Power

- connection type: G ¾
- centre distance: 180 mm
- ceramic cartridge (Highflow)
- operating pressure from 0.02 MPa
- with silencer
- connection dimension: DN15

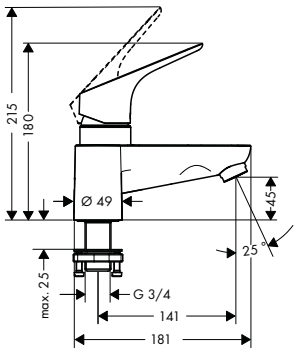

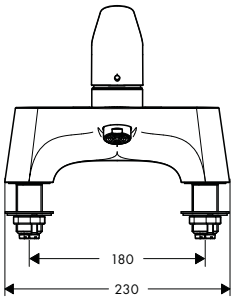

Measurements within scale drawings are in mm.

Technical specifications and units of measure are subject to change.

	finish	code no.	Euro



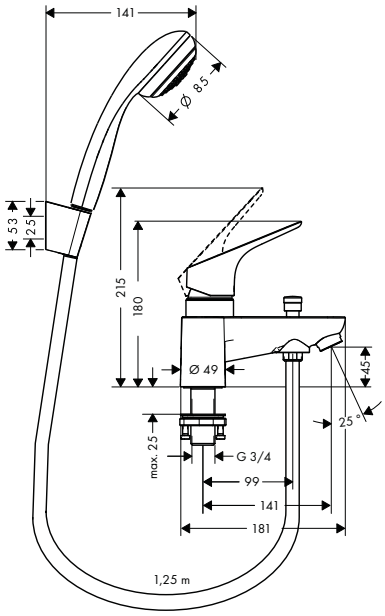

2-hole rim mounted bath mixer with diverter valve and Crometta 85 hand shower 1jet

Chrome | 31521000 | 297.60

Air Power

- consists of: 2-hole rim mounted bath mixer, hand shower, shower holder, shower hose
- connection type: G ¾
- centre distance: 180 mm
- ceramic cartridge (Highflow)
- operating pressure from 0.02 MPa
- diverter with automatic resetting
- non-return valve
- with silencer
- connection dimension: DN15

Consisting of:

- Hand shower Mono (# 28585000)
- Shower holder Porter S (# 28331XXX)
- Shower hose 160 cm (# 28276XXX)



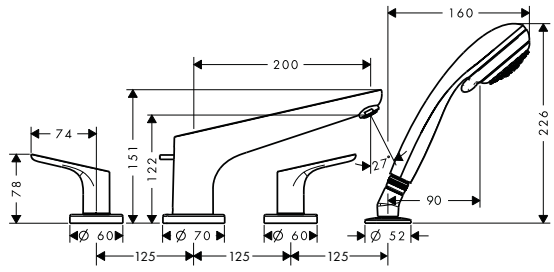

4-hole rim mounted bath mixer

Chrome | 31936000 | 364.50

Air Power | Quick Clean

- consists of: 4-hole rim mounted bath mixer, hand shower, shower holder
- connection type: basic set
- maximum pull-out length of hand shower: 1.60 m
- flow rate at 3 bar: 22 l/ min
- ceramic valves hot/ cold 180°
- diverter with automatic resetting
- non-return valve
- connection dimension: DN15
- with integrated safety combination EN1717

Consisting of:

- Hand shower Vario (# 28562000)

Required parts:

- Basic set for 4-hole rim mounted bath mixer | 13244180 | 275.20



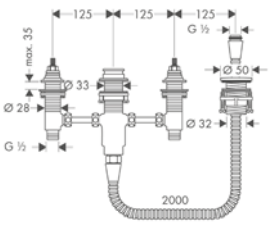

Basic set for 4-hole rim mounted bath mixer

13244180 | 275.20

- consists of: basic set, shower holder, shower hose
- maximum pull-out length of hand shower: 1.60 m
- maintenance opening required
- suitable for 4-hole rim mounted bath mixer
- connection thread: G ½
- connection dimension: DN15
- ceramic valves hot/ cold 90°

Measurements within scale drawings are in mm.

Technical specifications and units of measure are subject to change.

Shower

	finish	code no.	Euro
 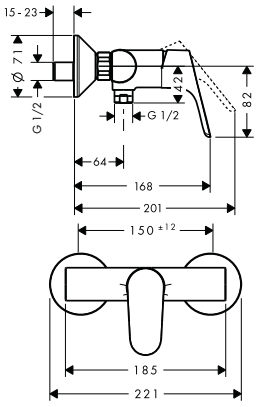 **Single lever shower mixer for exposed installation** · 1 function · connection type: s-shaped connections · centre distance: 150 ± 12 mm · flow rate of hand shower at 3 bar: 15 l/ min · ceramic cartridge · min. operating pressure: 1 bar · max. operating pressure: 10 bar · temperature limitation adjustable · non-return valve · with silencer · hose connection DN15 · connection dimension: DN15	Chrome	31960000	108.50
Alternative products: · Single lever shower mixer for exposed installation with 2 flow rates	Chrome	31968000	108.50
 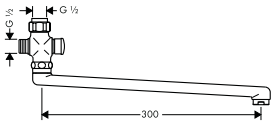 **Long swivel spout 30 cm** · with automatic resetting · length 300 mm · connection dimension DN15 · for installation on single lever shower mixer	Chrome	14495000	94.80
 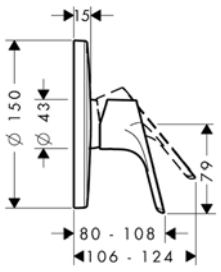 **Single lever shower mixer for concealed installation** · 1 function · connection type: basic set · flow rate at 3 bar: 29.3 l/ min · ceramic cartridge · min. operating pressure: 1 bar · max. operating pressure: 10 bar · temperature limitation adjustable	Chrome	31965000	123.30
Alternative products: · Single lever shower mixer HighFlow for concealed installation	Chrome	31964000	123.30
Required parts: · Basic set iBox universal		01800180	130.80
Optional parts: · Extension element 15 cm	Chrome	13597000	44.70

Measurements within scale drawings are in mm.

Technical specifications and units of measure are subject to change.

	finish	code no.	Euro
 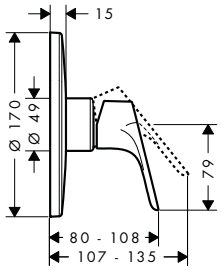			
Single lever shower mixer HighFlow for concealed installation · 1 function · connection type: basic set · flow rate at 3 bar: 49 l/min · ceramic cartridge (Highflow) · temperature limitation adjustable · connection dimension: DN15	Chrome	31964000	123.30
Alternative products:			
· Single lever shower mixer for concealed installation	Chrome	31965000	123.30
Required parts:			
· Basic set iBox universal with shut-off unit		01850180	169.90
· Basic set iBox universal		01800180	130.80
Optional parts:			
· Basic set for Trio diverter valve for concealed installation		15984180	153.20
 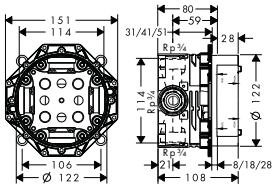			
Basic set iBox universal · suitable for all shower, bath tub and thermostat finish sets for concealed installation · connection thread · Rp ¾ · rotationally-symmetric installation · sound-decoupled installation · connection dimension: DN20		01800180	130.80
Alternative products:			
· Basic set iBox universal with shut-off unit		01850180	169.90
Optional parts:			
· Extension iBox universal basic set 2.5 cm		13595000	47.10
· Fastening rail set for iBox universal		96615000	33.40
· Assembly aid for iBox universal		93500000	12.20
 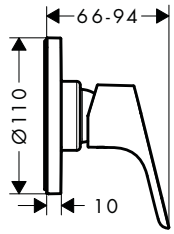			
Single lever shower mixer for concealed installation · 1 function · connection type: basic set · flow rate at 3 bar: 28.7 l/min · min. operating pressure: 1 bar · max. operating pressure: 10 bar	Chrome	31961000	40.90
Required parts:			
· Basic set for single lever shower mixer for concealed installation		13620180	105.30
 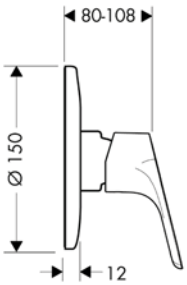			
Single lever shower mixer for concealed installation · 1 function · connection type: basic set · flow rate at 3 bar: 28.7 l/min · min. operating pressure: 1 bar · max. operating pressure: 10 bar	Chrome	31967000	40.90
Required parts:			
· Basic set for single lever shower mixer for concealed installation		13620180	105.30

Measurements within scale drawings are in mm.

	finish	code no.	Euro
Basic set for single lever shower mixer for concealed installation · ceramic cartridge · connection dimension: DN15		13620180	105.30



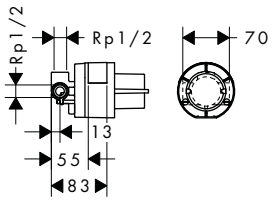

Measurements within scale drawings are in mm.

Technical specifications and units of measure are subject to change.

Novus®



Basin	page 399		Bidet	page 403	
Bath	page 404		Shower	page 407	

Possible combinations Novus

Basin


no.71126000*


no.71123000*


no.71030000*


no.71020000*


no.71140000


no.71127000

Bath


no.71040000*


no.71045000*


no.13201000


no.15758000


no.71333000


no.71320000

Shower


no.71060000*


no.71065000*


no.13211000


no.15757000


no.26330400*


no.26723000*


no.26657400*


no.27264400*

Accessories


no.40514000


no.40523000


no.40522000


no.01800180

* as an example

Basin

	finish	code no.	Euro



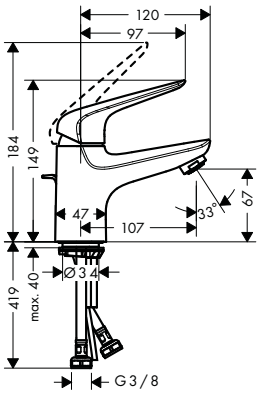

Single lever basin mixer 70 with pop-up waste set

Chrome 71020000 92.20

Air Power · Eco Smart · Quick Clean · Comfort Zone

- consists of: single lever basin mixer, waste set
- ComfortZone 70
- projection 107 mm
- normal spray
- flow rate at 3 bar: 5 l/min
- ceramic cartridge
- temperature limitation adjustable
- suitable for continuous flow water heaters
- pop-up waste set G 1¼
- material waste set: metal
- connection type: G ⅜ connections
- connection dimension: DN15

Alternative products:

- Single lever basin mixer 70 without waste set — Chrome 71021000 85.00
- Single lever basin mixer 70 LowFlow with push-open waste set — Chrome 71024000 92.20



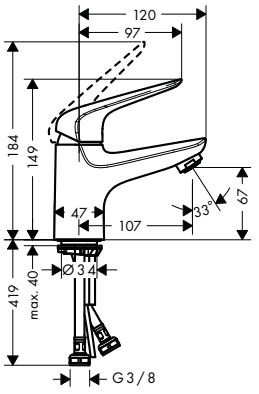

Single lever basin mixer 70 CoolStart with push-open waste set

Chrome 71022000 92.20

Air Power · Eco Smart · Quick Clean · Comfort Zone · Cool Start

- consists of: single lever basin mixer, waste set
- ComfortZone 70
- projection 107 mm
- normal spray
- flow rate at 3 bar: 5 l/min
- ceramic cartridge
- temperature limitation adjustable
- suitable for continuous flow water heaters
- push-open waste set G 1¼
- material waste set: synthetic
- connection type: G ⅜ connections
- connection dimension: DN15
- cold water in middle position



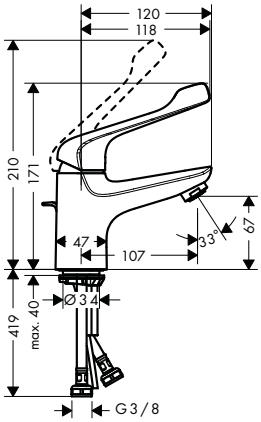

Single lever basin mixer 70 with extra long handle and pop-up waste set

Chrome 71920000 101.40

Air Power · Eco Smart · Quick Clean · Comfort Zone

- consists of: single lever basin mixer, waste set
- ComfortZone 70
- larger print for greater clarity
- with extra long barrier-free handle
- projection 107 mm
- normal spray
- flow rate at 3 bar: 5 l/min
- ceramic cartridge
- temperature limitation adjustable
- suitable for continuous flow water heaters
- pop-up waste set G 1¼
- material waste set: metal
- connection type: G ⅜ connections
- connection dimension: DN15

Alternative sizes:

- Single lever basin mixer 100 with extra long handle and pop-up waste set — Chrome 71921000 123.90

Measurements within scale drawings are in mm.

Technical specifications and units of measure are subject to change.

	finish	code no.	Euro



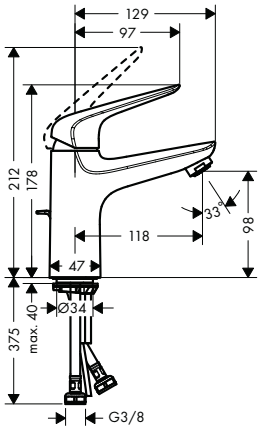

Single lever basin mixer 100 with pop-up waste set

Chrome — 71030000 — 112.60

Air Power · Eco Smart · Quick Clean · Comfort Zone

- consists of: single lever basin mixer, waste set
- ComfortZone 100
- projection 118 mm
- normal spray
- flow rate at 3 bar: 5 l/min
- ceramic cartridge
- temperature limitation adjustable
- suitable for continuous flow water heaters
- pop-up waste set G 1¼
- material waste set: metal
- connection type: G ⅜ connections
- connection dimension: DN15

Alternative products:

- Single lever basin mixer 100 without waste set — Chrome — 71031000 — 105.50
- Single lever basin mixer 100 LowFlow with push-open waste set — Chrome — 71034000 — 112.60
- Single lever basin mixer 100 for vented hot water cylinders with push-open waste set — Chrome — 71036000 — 180.20



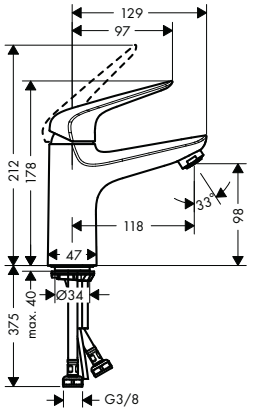

Single lever basin mixer 100 CoolStart with push-open waste set

Chrome — 71032000 — 112.60

Air Power · Eco Smart · Quick Clean · Comfort Zone · Cool Start

- consists of: single lever basin mixer, waste set
- ComfortZone 100
- projection 118 mm
- normal spray
- flow rate at 3 bar: 5 l/min
- ceramic cartridge
- temperature limitation adjustable
- suitable for continuous flow water heaters
- push-open waste set G 1¼
- material waste set: synthetic
- connection type: G ⅜ connections
- connection dimension: DN15
- cold water in middle position



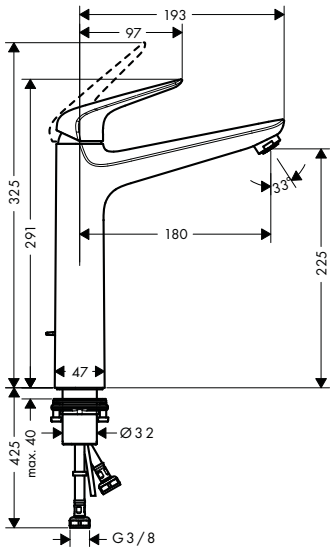

Single lever basin mixer 230 with pop-up waste set

Chrome — 71123000 — 143.40

Air Power · Eco Smart · Quick Clean · Comfort Zone

- consists of: single lever basin mixer, waste set
- ComfortZone 230
- projection 180 mm
- normal spray
- flow rate at 3 bar: 5 l/min
- ceramic cartridge
- temperature limitation adjustable
- suitable for continuous flow water heaters
- pop-up waste set G 1¼
- material waste set: metal
- connection type: G ⅜ connections
- connection dimension: DN15

Alternative products:

- Single lever basin mixer 230 without waste set — Chrome — 71124000 — 137.20

Measurements within scale drawings are in mm.

Technical specifications and units of measure are subject to change.

	finish	code no.	Euro



Single lever basin mixer 240 with swivel spout and pop-up waste set

Chrome | 71126000 | 174.10

Air Power · Eco Smart · Quick Clean · Comfort Zone

- consists of: single lever basin mixer, waste set
- ComfortZone 240
- projection 155 mm
- swivel range 120°
- normal spray
- flow rate at 3 bar: 5 l/min
- ceramic cartridge
- temperature limitation adjustable
- suitable for continuous flow water heaters
- pop-up waste set G 1¼
- material waste set: metal
- connection type: G ⅜ connections
- connection dimension: DN15
- handle position on the side: bottom-side at the base body (not suitable for wash bowls)

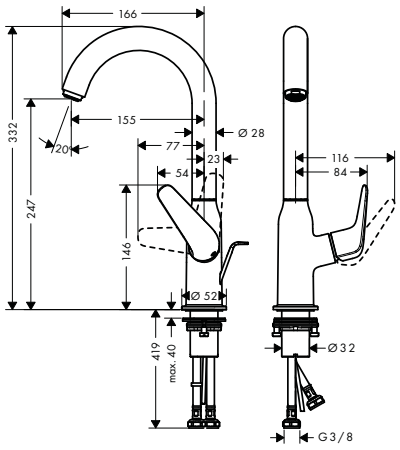

Alternative products:

- Single lever basin mixer 240 with swivel spout without waste set — Chrome | 71128000 | 167.90



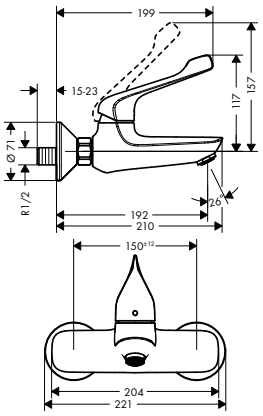

Single lever basin mixer for exposed installation with extra long handle

Chrome | 71923000 | 141.30

Air Power · Eco Smart · Quick Clean

- larger print for greater clarity
- with extra long barrier-free handle
- projection 192 mm
- centre distance: 150 ± 12 mm
- normal spray
- flow rate at 3 bar: 5 l/min
- ceramic cartridge
- temperature limitation adjustable
- with noise reduction
- suitable for continuous flow water heaters
- connection type: s-shaped connections
- connection dimension: DN15



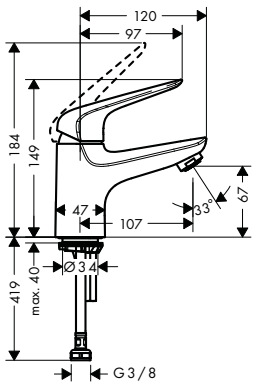

Pillar tap 70 for cold water without waste set

Chrome | 71050000 | 76.80

Air Power · Eco Smart · Quick Clean · Comfort Zone

- ComfortZone 70
- projection 107 mm
- normal spray
- flow rate at 3 bar: 5 l/min
- ceramic cartridge
- for cold water connection
- connection type: G ⅜ connections
- connection dimension: DN15

Measurements within scale drawings are in mm.

Technical specifications and units of measure are subject to change.

	finish	code no.	Euro



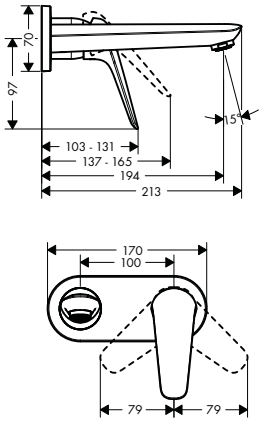

Single lever basin mixer for concealed installation wall-mounted with spout 19.5 cm

Chrome — 71127000 — 153.60

Air Power · Eco Smart · Quick Clean

- consists of: single lever basin mixer for concealed installation wall-mounted, waste set
- projection 194 mm
- normal spray
- flow rate at 3 bar: 5 l/ min
- ceramic cartridge
- temperature limitation adjustable
- suitable for continuous flow water heaters
- non-closing waste set
- material waste set: metal
- connection type: basic set
- connection dimension: DN15
- handle can be positioned on the right or left, depends on the basic set installation

Required parts:

- Basic set for single lever basin mixer for concealed installation wall-mounted — 13622180 — 210.00



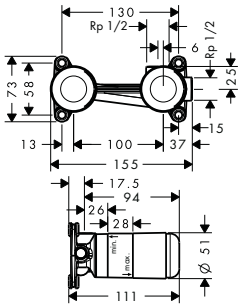

Basic set for single lever basin mixer for concealed installation wall-mounted

13622180 — 210.00

- variable positioning of the mixer system, can be left or right of the spout
- connection dimension: DN15

Optional parts:

- Extension set 2.5 cm — 31971000 — 105.40



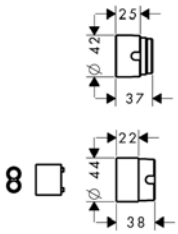

Extension set 2.5 cm

31971000 — 105.40

- extension length: 25 mm



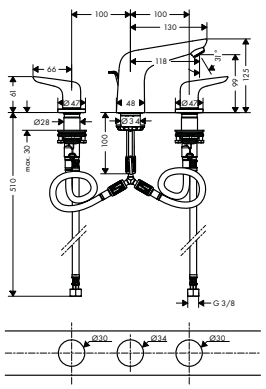

3-hole basin mixer 100 with pop-up waste set

Chrome — 71140000 — 209.90

Air Power · Eco Smart · Quick Clean · Comfort Zone

- consists of: 3-hole basin mixer, waste set
- ComfortZone 100
- projection 118 mm
- flow rate at 3 bar: 5 l/ min
- ceramic valves hot/ cold 90°
- suitable for continuous flow water heaters
- pop-up waste set G 1¼
- material waste set: metal
- connection type: G ⅜ connections
- connection dimension: DN15

Measurements within scale drawings are in mm.

Technical specifications and units of measure are subject to change.

Bidet

	finish	code no.	Euro



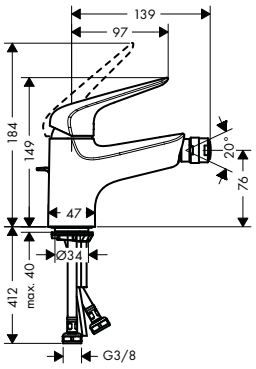

Single lever bidet mixer 70 with pop-up waste set

Chrome | 71142000 | 102.40

Air Power | Quick Clean

- consists of: single lever bidet mixer, waste set
- projection 139 mm
- aerator with ball pivot
- normal spray
- flow rate at 3 bar: 7.2 l/ min
- ceramic cartridge
- temperature limitation adjustable
- suitable for continous flow water heaters
- material waste set: metal
- connection dimension: DN15



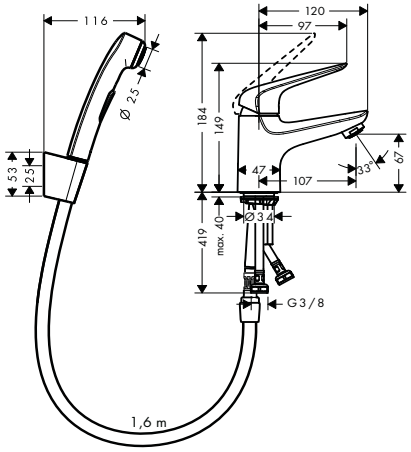

Single lever basin mixer 70 with bidette hand shower and shower hose 160 cm

Chrome | 71144000 | 138.20

Air Power | Quick Clean | Comfort Zone

- consists of: single lever basin mixer, bidette hand shower, shower holder, shower hose
- ComfortZone 70
- projection 107 mm
- flow rate at 3 bar: 6.5 l/ min
- ceramic cartridge
- temperature limitation adjustable
- suitable for continuous flow water heaters
- connection type: G ⅜ connections
- connection dimension: DN15

Consisting of:

- Single lever basin mixer 70 without waste set (# 71021000)
- Bidette hand shower 1jet with shower holder and pressure shower hose 160 cm (# 32128000)



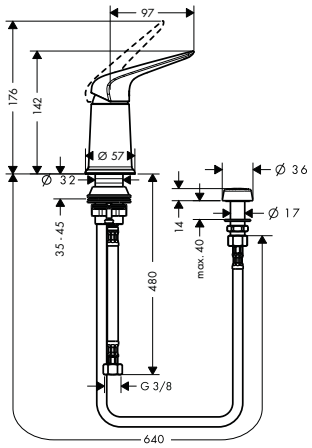

Bidet set with vertical spray

Chrome | 71145000 | 138.20

Eco Smart | Low Pressure

- consists of: Bidet mixer, vertical spray
- ceramic cartridge
- vertical spray and diverter
- integrated non-return valve
- efficient from 0.05 MPa onwards
- connection dimension: DN15

Measurements within scale drawings are in mm.

Technical specifications and units of measure are subject to change.

Bath

	finish	code no.	Euro
Single lever bath mixer for exposed installation	Chrome	71040000	123.90



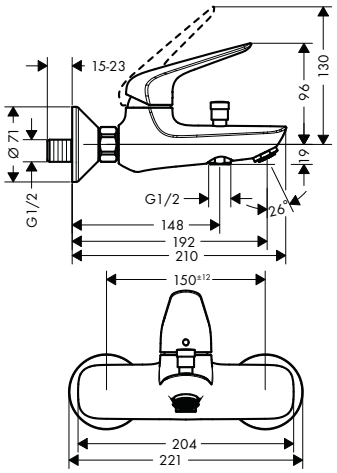

- projection 192 mm
- connection type: s-shaped connections
- centre distance: 150 ± 12 mm
- spray type mixer: normal spray
- flow rate for bath spout at 3 bar: 19 l/min
- flow rate of hand shower at 3 bar: 16 l/min
- ceramic cartridge
- min. operating pressure: 1 bar
- max. operating pressure: 10 bar
- temperature limitation adjustable
- diverter with automatic resetting
- non-return valve
- with silencer
- suitable for continous flow water heaters
- connection dimension: DN15

Alternative products:

· Single lever bath mixer for exposed installation with centre distance 15.3 cm	Chrome	71041000	130.10
· Single lever bath mixer for exposed installation with 2 flow rates	Chrome	71042000	123.90

Single lever bath mixer for concealed installation	Chrome	71045000	117.80



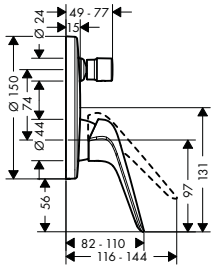

- connection type: basic set
- ceramic cartridge
- min. operating pressure: 1 bar
- max. operating pressure: 10 bar
- temperature limitation adjustable
- diverter with automatic resetting
- with silencer

Alternative products:

· Single lever bath mixer for concealed installation with integrated security combination according to EN1717	Chrome	71046000	183.30

Required parts:

· Basic set iBox universal		01800180	130.80

Optional parts:

· Extension element 15 cm	Chrome	13597000	44.70

Basic set iBox universal		01800180	130.80



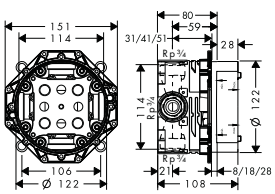

- suitable for all shower, bath tub and thermostat finish sets for concealed installation
- connection thread
- Rp ¾
- rotationally-symmetric installation
- sound-decoupled installation
- connection dimension: DN20

Alternative products:

· Basic set iBox universal with shut-off unit		01850180	169.90

Optional parts:

· Extension iBox universal basic set 2.5 cm		13595000	47.10
· Fastening rail set for iBox universal		96615000	33.40
· Assembly aid for iBox universal		93500000	12.20

Measurements within scale drawings are in mm.

Technical specifications and units of measure are subject to change.

	finish	code no.	Euro
 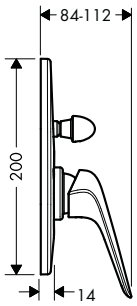			
Single lever bath mixer for concealed installation · connection type: basic set · ceramic cartridge · min. operating pressure: 1 bar · max. operating pressure: 10 bar · temperature limitation adjustable · diverter with automatic resetting	Chrome	71047000	44.00
Required parts: · Basic set for single lever bath mixer for concealed installation		31741180	118.60
 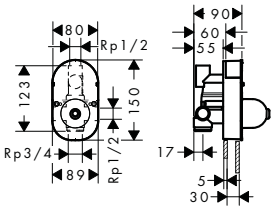			
Basic set for single lever bath mixer for concealed installation · ceramic cartridge · connection dimension: DN15		31741180	118.60
 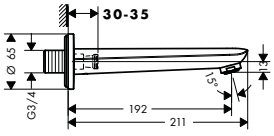			
Bath spout · with silencer · with escutcheon · projection 192 mm · wall-mounted · flow rate: 21 l/min · connection dimension: G ¾ · non-return valve	Chrome	71320000	90.80
 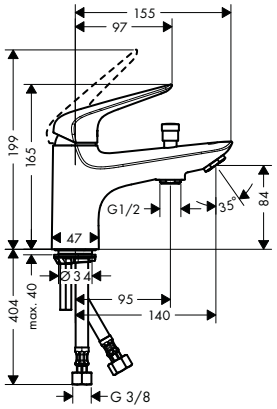			
Single lever bath and shower mixer Monotrou · projection 140 mm · connection type: G ⅜ connections · spray type mixer: normal spray · flow rate at 3 bar: 20 l/min · ceramic cartridge · min. operating pressure: 1 bar · max. operating pressure: 10 bar · temperature limitation adjustable · diverter with automatic resetting · non-return valve · suitable for continous flow water heaters · connection dimension: DN15	Chrome	71321000	122.90
Alternative products: · Single lever bath and shower mixer Monotrou with 2 flow rates	Chrome	71324000	122.90

Measurements within scale drawings are in mm.

	finish	code no.	Euro



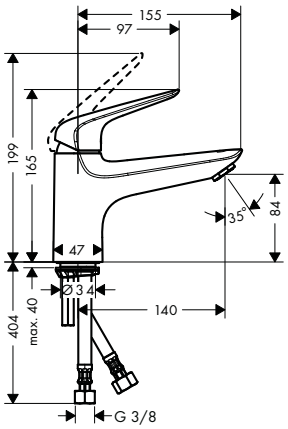

Single lever bath mixer Monotrou

Chrome | 71322000 | 112.60

Air Power

- projection 140 mm
- connection type: G ⅜ connections
- spray type mixer: normal spray
- flow rate at 3 bar: 20 l/ min
- ceramic cartridge
- min. operating pressure: 1 bar
- max. operating pressure: 10 bar
- temperature limitation adjustable
- suitable for continous flow water heaters
- connection dimension: DN15



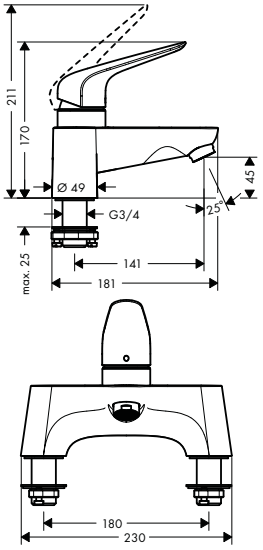

2-hole rim mounted bath mixer

Chrome | 71043000 | 235.50

Air Power | Quick Clean | Low Pressure

- projection 141 mm
- connection type: G ¾
- centre distance: 180 mm
- ceramic cartridge (Highflow)
- operating pressure from 0.02 MPa
- with silencer
- connection dimension: DN15



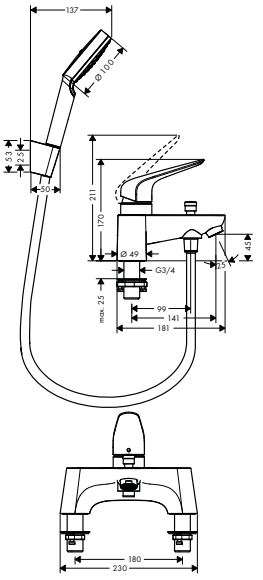

2-hole rim mounted bath mixer with diverter valve and Croma Select S hand shower

Chrome | 71044000 | 276.50

Air Power | Low Pressure

- consists of: 2-hole rim mounted bath mixer, hand shower, shower holder, shower hose
- projection 141 mm
- connection type: G ¾
- centre distance: 180 mm
- ceramic cartridge (Highflow)
- operating pressure from 0.02 MPa
- diverter with automatic resetting
- non-return valve
- with silencer
- connection dimension: DN15

Consisting of:

- Shower holder Porter S (# 28331XXX)
- Shower hose 160 cm (# 28276XXX)
- Hand shower 1jet (# 26804400)

Measurements within scale drawings are in mm.

Technical specifications and units of measure are subject to change.

	finish	code no.	Euro
4-hole rim mounted bath mixer	Chrome	71333000	317.40

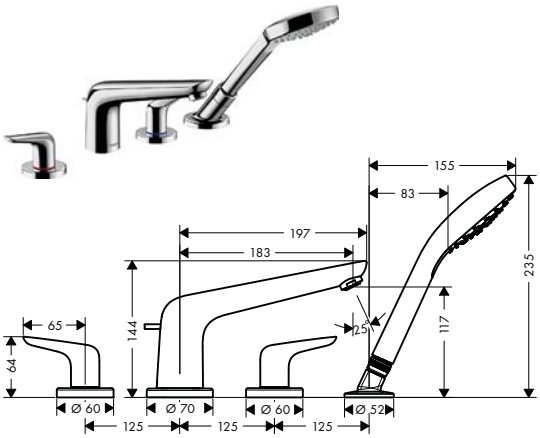

- consists of: 4-hole rim mounted bath mixer, hand shower, shower holder
- projection 183 mm
- connection type: basic set
- maximum pull-out length of hand shower: 1.60 m
- flow rate at 3 bar: 22 l/min
- ceramic valves hot/ cold 90°
- diverter with automatic resetting
- non-return valve
- connection dimension: DN15
- with integrated safety combination EN1717

Consisting of:
- Hand shower 1jet (# 26804400)

Required parts:

· Basic set for 4-hole rim mounted bath mixer		13244180	275.20



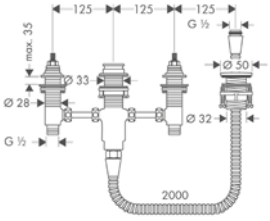

Basic set for 4-hole rim mounted bath mixer		13244180	275.20

- consists of: basic set, shower holder, shower hose
- maximum pull-out length of hand shower: 1.60 m
- maintenance opening required
- suitable for 4-hole rim mounted bath mixer
- connection thread: G ½
- connection dimension: DN15
- ceramic valves hot/ cold 90°

Shower



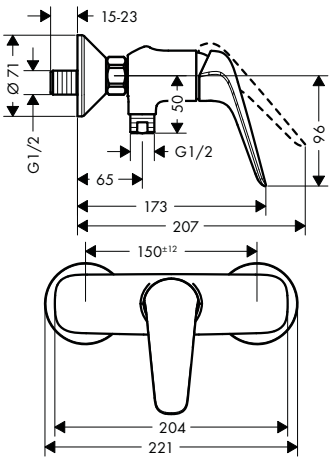

Single lever shower mixer for exposed installation	Chrome	71060000	97.30

- 1 function
- connection type: s-shaped connections
- centre distance: 150 ± 12 mm
- flow rate of hand shower at 3 bar: 15 l/min
- ceramic cartridge
- min. operating pressure: 1 bar
- max. operating pressure: 10 bar
- temperature limitation adjustable
- non-return valve
- with silencer
- hose connection DN15
- connection dimension: DN15

Alternative products:

· Single lever shower mixer for exposed installation with centre distance 15.3 cm	Chrome	71061000	107.50
· Single lever shower mixer for exposed installation with 2 flow rates	Chrome	71062000	97.30

Measurements within scale drawings are in mm.

Technical specifications and units of measure are subject to change.

	finish	code no.	Euro



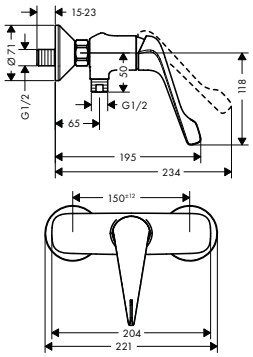

Single lever shower mixer for exposed installation with extra long handle

Chrome — 71926000 — 107.50

- larger print for greater clarity
- with extra long barrier-free handle
- 1 function
- connection type: s-shaped connections
- centre distance: 150 ± 12 mm
- ceramic cartridge
- temperature limitation adjustable
- non-return valve
- with silencer
- hose connection DN15
- connection dimension: DN15



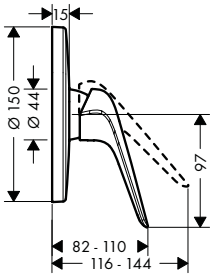

Single lever shower mixer for concealed installation

Chrome — 71065000 — 107.50

- 1 function
- connection type: basic set
- flow rate at 3 bar: 23.4 l/min
- ceramic cartridge
- min. operating pressure: 1 bar
- max. operating pressure: 10 bar
- temperature limitation adjustable

Alternative products:

- Single lever shower mixer HighFlow for concealed installation — Chrome — 71066000 — 107.50

Required parts:

- Basic set iBox universal — 01800180 — 130.80

Optional parts:

- Extension element 15 cm — Chrome — 13597000 — 44.70



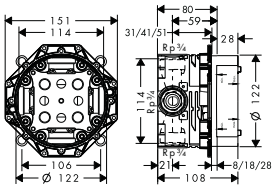

Basic set iBox universal

01800180 — 130.80

- suitable for all shower, bath tub and thermostat finish sets for concealed installation
- connection thread
- Rp ¾
- rotationally-symmetric installation
- sound-decoupled installation
- connection dimension: DN20

Alternative products:

- Basic set iBox universal with shut-off unit — 01850180 — 169.90

Optional parts:

- Extension iBox universal basic set 2.5 cm — 13595000 — 47.10
- Fastening rail set for iBox universal — 96615000 — 33.40
- Assembly aid for iBox universal — 93500000 — 12.20



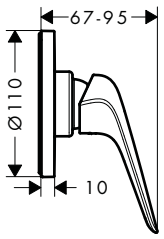

Single lever shower mixer for concealed installation

Chrome — 71063000 — 35.80

- 1 function
- connection type: basic set
- flow rate at 3 bar: 28.7 l/min
- min. operating pressure: 1 bar
- max. operating pressure: 10 bar

Required parts:

- Basic set for single lever shower mixer for concealed installation — 13620180 — 105.30

Measurements within scale drawings are in mm.

Technical specifications and units of measure are subject to change.

	finish	code no.	Euro
 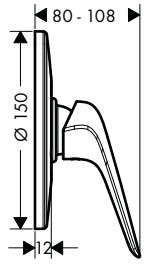	Single lever shower mixer for concealed installation · 1 function · connection type: basic set · flow rate at 3 bar: 28.7 l/min · min. operating pressure: 1 bar · max. operating pressure: 10 bar **Required parts:** · Basic set for single lever shower mixer for concealed installation	Chrome	71067000 13620180	35.80 105.30
 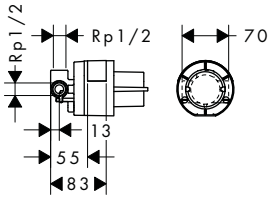	Basic set for single lever shower mixer for concealed installation · ceramic cartridge · connection dimension: DN15		13620180	105.30
 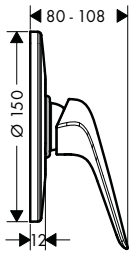	Shower mixer set for concealed installation · consists of: single lever shower mixer, basic set · 1 function · connection type: basic set · ceramic cartridge **Consisting of:** · Single lever shower mixer for concealed installation (# 71067000) · Basic set for single lever shower mixer for concealed installation (# 13620180)	Chrome	71068000	122.90

Measurements within scale drawings are in mm.

Technical specifications and units of measure are subject to change.

Logis®



Basin	page 413		Bidet	page 418	
Bath	page 419		Shower	page 424	
Valve	page 426				

Possible combinations Logis

Logis

Basin


no.71130000*


no.71090000*


no.71222000*


no.71100000*


no.71070000*


no.71120000*


no.71133000


no.71220000

Bath


no.71400000*


no.71243000


no.71405000*


no.13123000


no.15708000


no.71314000

Shower


no.71600000*


no.71263000


no.71605000*


no.15707000


no.13122000


no.26823400*


no.26577000, -400*


no.26656400*


no.27264400*

Accessories


no.40514000


no.40523000


no.40522000


no.01800180

* as an example

Basin

	finish	code no.	Euro
 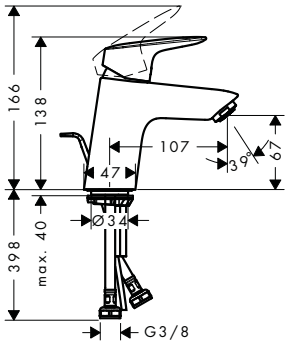	Chrome	71070000	76.60

Single lever basin mixer 70 with pop-up waste set

Air Power · Eco Smart · Comfort Zone

- consists of: single lever basin mixer, waste set
- ComfortZone 70
- projection 107 mm
- normal spray
- flow rate at 3 bar: 5 l/min
- ceramic cartridge
- temperature limitation adjustable
- suitable for continuous flow water heaters
- pop-up waste set G 1¼
- material waste set: synthetic
- connection type: G ⅜ connections
- connection dimension: DN15

Alternative products:

· Single lever basin mixer 70 with metal pop-up waste set	Chrome	71170000	87.20
· Single lever basin mixer 70 with push-open waste set	Chrome	71077000	76.60
· Single lever basin mixer 70 without waste set	Chrome	71071000	71.10
· Single lever basin mixer 70 LowFlow with pop-up waste set	Chrome	71078000	76.60

 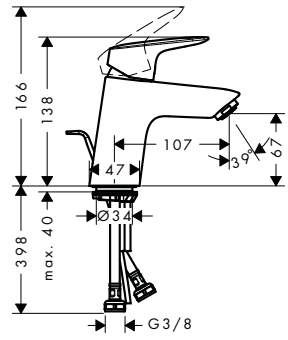	Chrome	71072000	76.60

Single lever basin mixer 70 CoolStart with pop-up waste set

Air Power · Eco Smart · Comfort Zone · Cool Start

- consists of: single lever basin mixer, waste set
- ComfortZone 70
- projection 107 mm
- normal spray
- flow rate at 3 bar: 5 l/min
- ceramic cartridge
- temperature limitation adjustable
- suitable for continuous flow water heaters
- pop-up waste set G 1¼
- material waste set: synthetic
- connection type: G ⅜ connections
- connection dimension: DN15
- cold water in middle position

Alternative products:

· Single lever basin mixer 70 CoolStart without waste set	Chrome	71073000	71.10

Measurements within scale drawings are in mm.

Technical specifications and units of measure are subject to change.

	finish	code no.	Euro



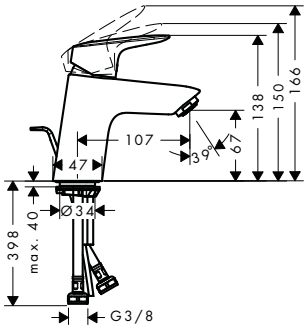

Single lever basin mixer 70 with 2 flow rates with pop-up waste set

Chrome — 71075000 — 76.60

Air Power · Eco Smart · Comfort Zone · Cool Start

- consists of: single lever basin mixer, waste set
- ComfortZone 70
- projection 107 mm
- normal spray
- flow rate at 3 bar: 9.5 l/min
- ceramic cartridge with 2 flow rates
- temperature limitation adjustable
- suitable for continuous flow water heaters
- pop-up waste set G 1¼
- material waste set: synthetic
- connection type: G ⅜ connections
- connection dimension: DN15
- cold water in middle position

Alternative products:

- Single lever basin mixer 70 with 2 flow rates without waste set — Chrome — 71076000 — 71.10



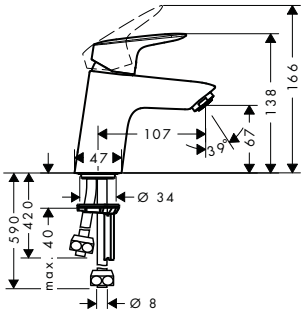

Single lever basin mixer 70 for vented hot water cylinders with push-open waste set

Chrome — 71074000 — 147.70

Eco Smart · Comfort Zone

- consists of: single lever basin mixer, waste set
- ComfortZone 70
- projection 107 mm
- normal spray
- flow rate at 3 bar: 5 l/min
- ceramic cartridge
- temperature limitation adjustable
- push-open waste set G 1¼
- material waste set: synthetic
- connection type: copper pipe connections



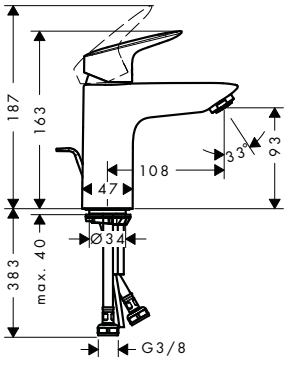

Single lever basin mixer 100 with pop-up waste set

Chrome — 71100000 — 98.50

Air Power · Eco Smart · Comfort Zone

- consists of: single lever basin mixer, waste set
- ComfortZone 100
- projection 108 mm
- normal spray
- flow rate at 3 bar: 5 l/min
- ceramic cartridge
- temperature limitation adjustable
- suitable for continuous flow water heaters
- pop-up waste set G 1¼
- material waste set: synthetic
- connection type: G ⅜ connections
- connection dimension: DN15

Alternative products:

- Single lever basin mixer 100 with metal pop-up waste set — Chrome — 71171000 — 109.10
- Single lever basin mixer 100 with push-open waste set — Chrome — 71107000 — 98.50
- Single lever basin mixer 100 LowFlow with pop-up waste set — Chrome — 71104000 — 98.50
- Single lever basin mixer 100 without waste set — Chrome — 71101000 — 93.00

Measurements within scale drawings are in mm.

Technical specifications and units of measure are subject to change.

	finish	code no.	Euro

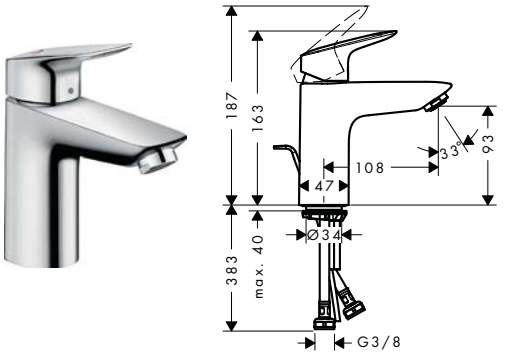

Single lever basin mixer 100 CoolStart with pop-up waste set

Chrome	71102000	98.50

Air Power · Eco Smart · Comfort Zone · Cool Start

- consists of: single lever basin mixer, waste set
- ComfortZone 100
- projection 108 mm
- normal spray
- flow rate at 3 bar: 5 l/min
- ceramic cartridge
- temperature limitation adjustable
- suitable for continuous flow water heaters
- pop-up waste set G 1¼
- material waste set: synthetic
- connection type: G ⅜ connections
- connection dimension: DN15
- cold water in middle position

Alternative products:

· Single lever basin mixer 100 CoolStart without waste set	Chrome	71103000	93.00

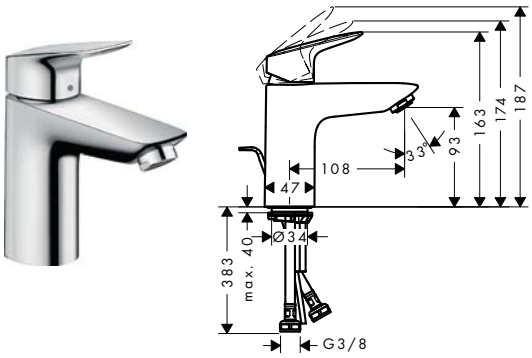

Single lever basin mixer 100 with 2 flow rates with pop-up waste set

Chrome	71105000	98.50

Air Power · Eco Smart · Comfort Zone · Cool Start

- consists of: single lever basin mixer, waste set
- ComfortZone 100
- projection 108 mm
- normal spray
- flow rate at 3 bar: 9.5 l/min
- ceramic cartridge with 2 flow rates
- temperature limitation adjustable
- suitable for continuous flow water heaters
- pop-up waste set G 1¼
- material waste set: synthetic
- connection type: G ⅜ connections
- connection dimension: DN15
- cold water in middle position

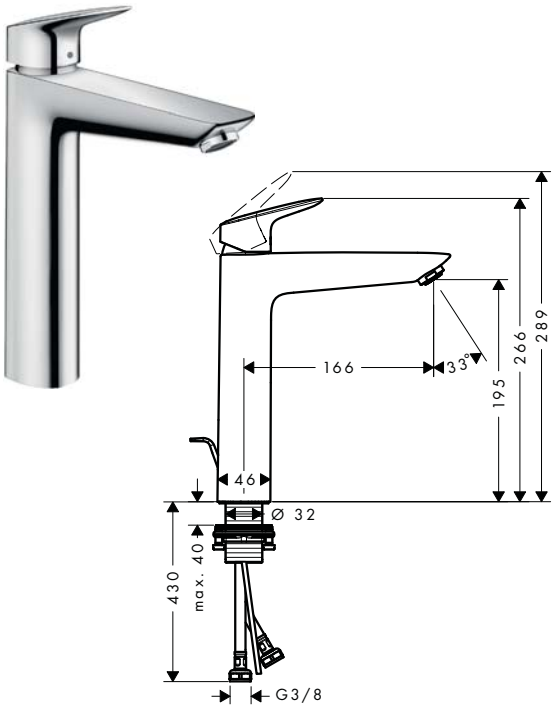

Single lever basin mixer 190 with pop-up waste set

Chrome	71090000	125.80

Air Power · Eco Smart · Comfort Zone

- consists of: single lever basin mixer, waste set
- ComfortZone 190
- projection 166 mm
- normal spray
- flow rate at 3 bar: 5 l/min
- ceramic cartridge
- temperature limitation adjustable
- suitable for continuous flow water heaters
- pop-up waste set G 1¼
- material waste set: synthetic
- connection type: G ⅜ connections
- connection dimension: DN15

Alternative products:

· Single lever basin mixer 190 without waste set	Chrome	71091000	120.30

Measurements within scale drawings are in mm.

	finish	code no.	Euro



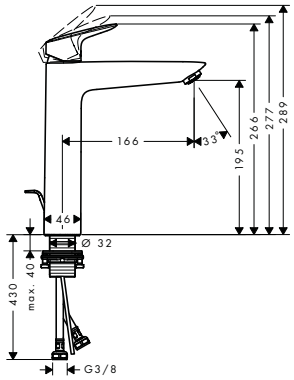

Single lever basin mixer 190 with 2 flow rates with pop-up waste set

Chrome — 71095000 — 125.80

Air Power · Eco Smart · Comfort Zone · Cool Start

- consists of: single lever basin mixer, waste set
- ComfortZone 190
- projection 166 mm
- normal spray
- flow rate at 3 bar: 9.5 l/min
- ceramic cartridge with 2 flow rates
- temperature limitation adjustable
- suitable for continuous flow water heaters
- pop-up waste set G 1¼
- material waste set: synthetic
- connection type: G ⅜ connections
- connection dimension: DN15
- cold water in middle position



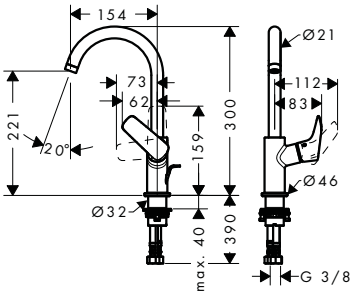

Single lever basin mixer 210 with swivel spout and pop-up waste set

Chrome — 71130000 — 158.60

Air Power · Eco Smart · Comfort Zone

- consists of: single lever basin mixer, waste set
- ComfortZone 210
- projection 154 mm
- swivel range 120°
- normal spray
- flow rate at 3 bar: 5 l/min
- ceramic cartridge
- temperature limitation adjustable
- suitable for continuous flow water heaters
- pop-up waste set G 1¼
- material waste set: synthetic
- connection type: G ⅜ connections
- connection dimension: DN15
- handle position on the side: bottom-side at the base body (not suitable for wash bowls)

Alternative products:

- Single lever basin mixer 210 with swivel spout without waste set — Chrome — 71131000 — 153.20



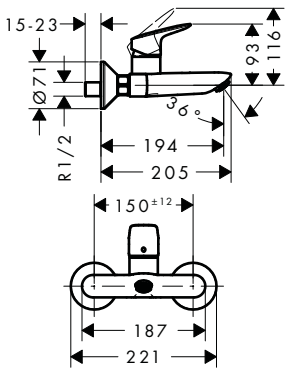

Single lever basin mixer for exposed installation wall-mounted

Chrome — 71225000 — 109.40

Air Power · Eco Smart · Quick Clean

- projection 194 mm
- centre distance: 150 ± 12 mm
- normal spray
- flow rate at 3 bar: 5 l/min
- ceramic cartridge
- temperature limitation adjustable
- with noise reduction
- suitable for continuous flow water heaters
- connection type: G ½
- connection dimension: DN15

Measurements within scale drawings are in mm.

Technical specifications and units of measure are subject to change.

	finish	code no.	Euro



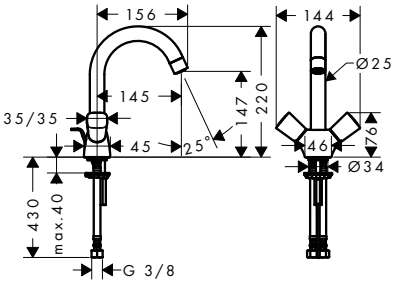

2-handle basin mixer 150 with pop-up waste set

Chrome — 71222000 — 98.50

Air Power · Eco Smart · Comfort Zone

- consists of: 2-handle basin mixer, waste set
- ComfortZone 150
- projection 145 mm
- swivel range 120°
- normal spray
- flow rate at 3 bar: 5 l/min
- ceramic valves hot/ cold 90°
- suitable for continuous flow water heaters
- pop-up waste set G 1¼
- material waste set: synthetic
- connection type: G ⅜ connections
- connection dimension: DN15

Alternative products:

- 2-handle basin mixer 150 without waste set — Chrome — 71221000 — 93.00



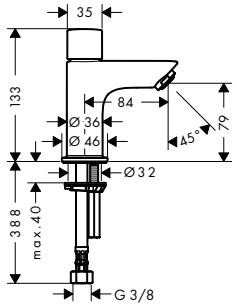

Pillar tap 70 for cold water without waste set

Chrome — 71120000 — 65.60

Air Power · Eco Smart · Comfort Zone

- ComfortZone 70
- projection 84 mm
- normal spray
- flow rate at 3 bar: 5 l/min
- ceramic valves 90°
- for cold water connection
- connection type: G ⅜ connections
- connection dimension: DN15



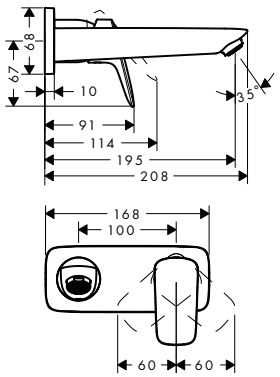

Single lever basin mixer for concealed installation wall-mounted with spout 19.5 cm

Chrome — 71220000 — 147.70

Air Power · Eco Smart

- consists of: single lever basin mixer for concealed installation wall-mounted, waste set
- projection 195 mm
- normal spray
- flow rate at 3 bar: 5 l/min
- ceramic cartridge
- temperature limitation adjustable
- suitable for continuous flow water heaters
- non-closing waste set
- material waste set: metal
- connection type: basic set
- connection dimension: DN15
- handle can be positioned on the right or left, depends on the basic set installation

Required parts:

- Basic set for single lever basin mixer for concealed installation wall-mounted — 13622180 — 210.00



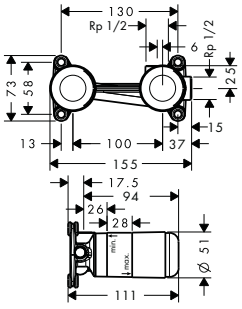

Basic set for single lever basin mixer for concealed installation wall-mounted

13622180 — 210.00

- variable positioning of the mixer system, can be left or right of the spout
- connection dimension: DN15

Optional parts:

- Extension set 2.5 cm — 31971000 — 105.40

Measurements within scale drawings are in mm.

Technical specifications and units of measure are subject to change.

	finish	code no.	Euro
Extension set 2.5 cm · extension length: 25 mm		31971000	105.40



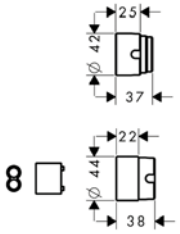



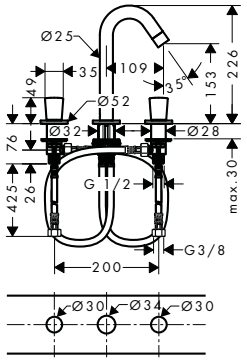

3-hole basin mixer 150 with pop-up waste set · consists of: 3-hole basin mixer, waste set · ComfortZone 150 · projection 109 mm · flow rate at 3 bar: 5 l/ min · ceramic valves hot/ cold 90° · suitable for continuous flow water heaters · pop-up waste set G 1¼ · material waste set: synthetic · connection type: G ⅜ connections · connection dimension: DN15	Chrome	71133000	196.90

Bidet



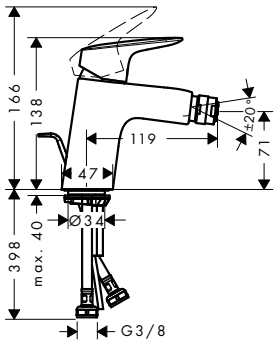

Single lever bidet mixer 70 with pop-up waste set · consists of: single lever bidet mixer, waste set · projection 119 mm · aerator with ball pivot · normal spray · flow rate at 3 bar: 7.2 l/ min · ceramic cartridge · temperature limitation adjustable · suitable for continous flow water heaters · material waste set: synthetic · connection dimension: DN15	Chrome	71204000	82.00
Alternative products: · Single lever bidet mixer 70 with metal pop-up waste set	Chrome	71203000	89.50



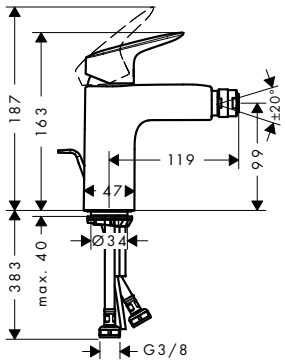

Single lever bidet mixer 100 with pop-up waste set · consists of: single lever bidet mixer, waste set · projection 119 mm · aerator with ball pivot · normal spray · flow rate at 3 bar: 7.2 l/ min · ceramic cartridge · temperature limitation adjustable · suitable for continous flow water heaters · material waste set: synthetic · connection dimension: DN15	Chrome	71200000	103.90

Measurements within scale drawings are in mm.

Technical specifications and units of measure are subject to change.

	finish	code no.	Euro

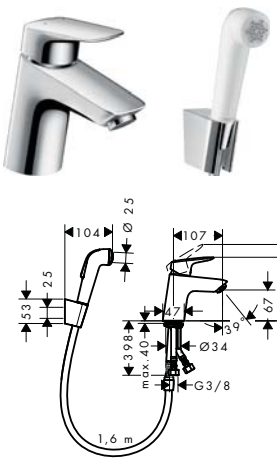

Single lever basin mixer with bidette hand shower and shower hose 160 cm

Chrome — 71290000 — 120.40

Air Power · Eco Smart · Quick Clean · Comfort Zone

- consists of: single lever basin mixer, bidette hand shower, shower holder, shower hose
- ComfortZone 70
- flow rate at 3 bar: 5 l/min
- ceramic cartridge
- temperature limitation adjustable
- suitable for continuous flow water heaters
- connection type: G ⅜ connections
- connection dimension: DN15

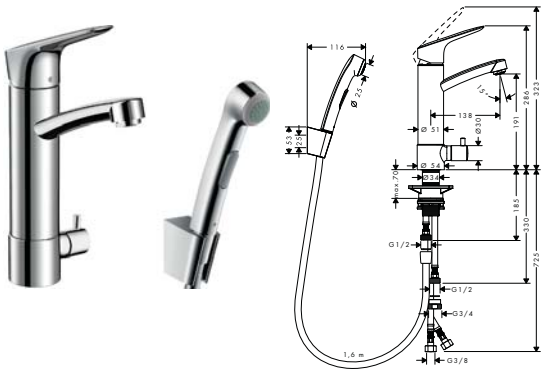

Single lever basin mixer with device shut-off valve with bidette hand shower and shower hose 160 cm

Chrome — 31515000 — 300.70

Air Power · Quick Clean · Comfort Zone

- consists of: single lever basin mixer, bidette hand shower, shower holder, shower hose
- ComfortZone 190
- swivel range 120°
- flow rate at 3 bar: 9.7 l/min
- ceramic cartridge
- temperature limitation adjustable
- connection type: G ⅜ connections
- connection dimension: DN15

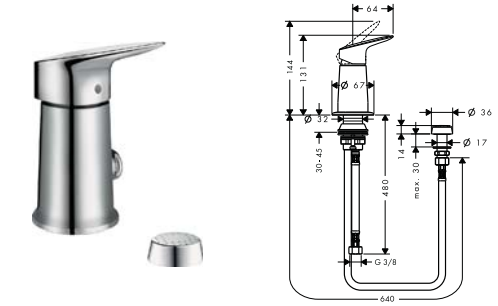

Bidet set with vertical spray

Chrome — 71629000 — 115.70

Eco Smart · Low Pressure

- consists of: Bidet mixer, vertical spray
- ceramic cartridge
- vertical spray and diverter
- integrated non-return valve
- efficient from 0.05 MPa onwards
- connection dimension: DN15

Bath



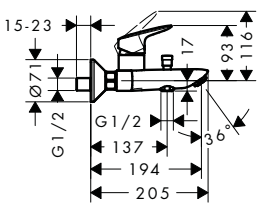

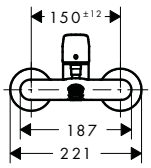

Single lever bath mixer for exposed installation

Chrome — 71400000 — 109.40

Air Power

- projection 194 mm
- connection type: s-shaped connections
- centre distance: 150 ± 12 mm
- spray type mixer: normal spray
- flow rate for bath spout at 3 bar: 20 l/min
- flow rate of hand shower at 3 bar: 17 l/min
- ceramic cartridge
- temperature limitation adjustable
- diverter with automatic resetting
- non-return valve
- with silencer
- suitable for continous flow water heaters
- connection dimension: DN15

Alternative products:

- Single lever bath mixer for exposed installation with centre distance 15.3 cm — Chrome — 71430000 — 114.90
- Single lever bath mixer for exposed installation with 2 flow rates — Chrome — 71401000 — 109.40

Measurements within scale drawings are in mm.

Technical specifications and units of measure are subject to change.

	finish	code no.	Euro



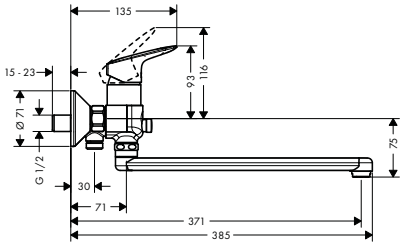

Single lever bath mixer with long spout

Chrome | 71402000 | 149.60

- projection 300 mm
- connection type: s-shaped connections
- centre distance: 150 ± 12 mm
- spray type mixer: normal spray
- flow rate at 3 bar: 22 l/ min
- ceramic cartridge
- temperature limitation adjustable
- diverter with automatic resetting
- suitable for continous flow water heaters
- connection dimension: DN15



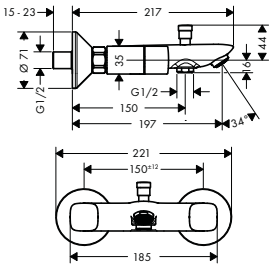

2-handle bath mixer for exposed installation

Chrome | 71243000 | 125.80

- connection type: s-shaped connections
- centre distance: 150 ± 12 mm
- flow rate for bath spout at 3 bar: 26 l/ min
- flow rate of hand shower at 3 bar: 17 l/ min
- ceramic valves hot/ cold 90°
- with silencer
- suitable for continous flow water heaters



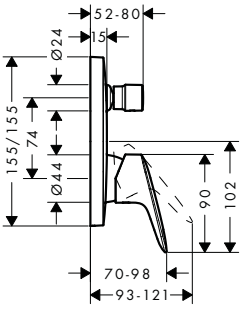

Single lever bath mixer for concealed installation

Chrome | 71405000 | 114.90

- connection type: basic set
- ceramic cartridge
- temperature limitation adjustable
- diverter with automatic resetting

Alternative products:

- Single lever bath mixer for concealed installation with integrated security combination according to EN1717 — Chrome | 71407000 | 180.50

Required parts:

- Basic set iBox universal | 01800180 | 130.80



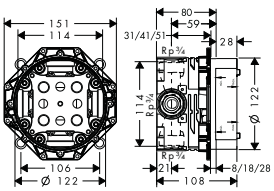

Basic set iBox universal

01800180 | 130.80

- suitable for all shower, bath tub and thermostat finish sets for concealed installation
- connection thread
- Rp ¾
- rotationally-symmetric installation
- sound-decoupled installation
- connection dimension: DN20

Alternative products:

- Basic set iBox universal with shut-off unit | 01850180 | 169.90

Optional parts:

- Extension iBox universal basic set 2.5 cm | 13595000 | 47.10
- Fastening rail set for iBox universal | 96615000 | 33.40
- Assembly aid for iBox universal | 93500000 | 12.20

Measurements within scale drawings are in mm.

Technical specifications and units of measure are subject to change.

	finish	code no.	Euro
 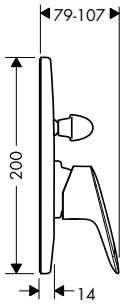	Chrome	71406000	40.90

Single lever bath mixer for concealed installation

- connection type: basic set
- ceramic cartridge
- temperature limitation adjustable
- diverter with automatic resetting

Required parts:

- Basic set for single lever bath mixer for concealed installation — 31741180 — 118.60

 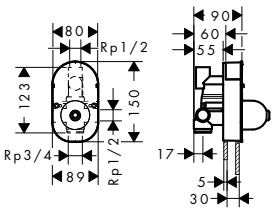		31741180	118.60

Basic set for single lever bath mixer for concealed installation

- ceramic cartridge
- connection dimension: DN15

 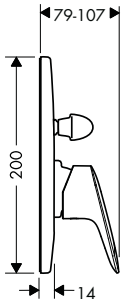	Chrome	71409000	154.50

Single lever bath mixer set for concealed installation

- consists of: Single lever bath mixer, basic set
- connection type: basic set
- ceramic cartridge

Consisting of:

- Single lever bath mixer for concealed installation (# 71406000)
- Basic set for single lever bath mixer for concealed installation (# 31741180)

 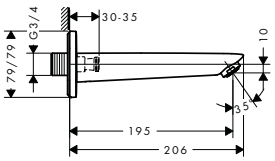	Chrome	71410000	86.10

Bath spout

- connection type: G ¾
- with escutcheon
- projection 195 mm
- wall-mounted
- connection dimension: DN20
- spray type: normal spray

 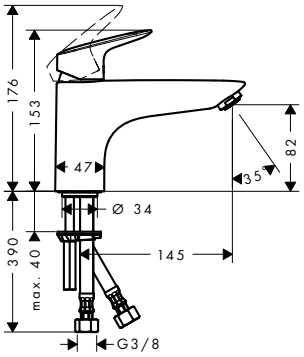	Chrome	71311000	107.10

Single lever bath mixer Monotrou

- projection 145 mm
- connection type: G ⅜ connections
- spray type mixer: normal spray
- flow rate at 3 bar: 20 l/min
- ceramic cartridge
- temperature limitation adjustable
- non-return valve
- suitable for continous flow water heaters
- connection dimension: DN15

Measurements within scale drawings are in mm.

Technical specifications and units of measure are subject to change.

	finish	code no.	Euro
Single lever bath and shower mixer Monotrou · projection 145 mm · connection type: G ⅜ connections · spray type mixer: normal spray · flow rate at 3 bar: 20 l/min · ceramic cartridge · temperature limitation adjustable · diverter with automatic resetting · suitable for continous flow water heaters · connection dimension: DN15	Chrome	71312000	117.00
Alternative products: · Single lever bath and shower mixer Monotrou with 2 flow rates	Chrome	71315000	117.00



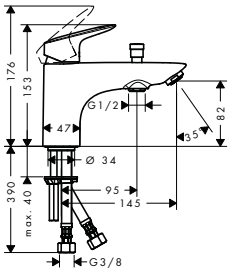

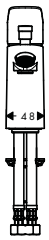

3-hole rim mounted single lever bath mixer with Secuflex · consists of: 3-hole rim mounted single lever bath mixer, hand shower, shower holder · projection 111 mm · connection type: basic set · spray type mixer: normal spray · spray type hand shower: Rain · maximum pull-out length of hand shower: 1.10 m · flow rate at 3 bar: 22 l/min · ceramic cartridge · temperature limitation adjustable · non-return valve · connection dimension: DN15	Chrome	71310000	437.60
Consisting of: · Hand shower 1jet (# 28580000)			
Required parts: · Basic set for 3-hole rim mounted single lever bath mixer		13437180	653.90



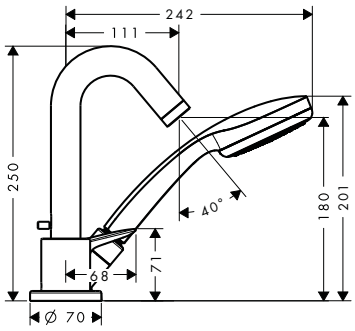

Basic set for 3-hole rim mounted single lever bath mixer · consists of: basic set, shower hose, Secubox · maximum pull-out length of hand shower: 1.10 m · connection thread: G ½ · connection dimension: DN15		13437180	653.90
Optional parts: · Secuflex insert extension		98806000	3.80



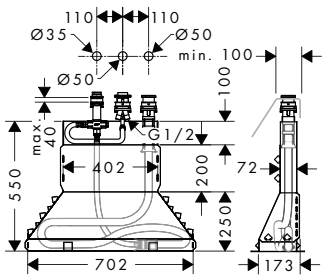

Measurements within scale drawings are in mm.

Technical specifications and units of measure are subject to change.

	finish	code no.	Euro
3-hole rim mounted single lever bath mixer · consists of: 3-hole rim mounted single lever bath mixer, hand shower · projection 111 mm · connection type: basic set · spray type mixer: normal spray · spray type hand shower: Rain · maximum pull-out length of hand shower: 1.60 m · flow rate at 3 bar: 22 l/ min · ceramic cartridge · temperature limitation adjustable · connection dimension: DN15 **Consisting of:** · Hand shower 1jet (# 28580000) **Required parts:**	Chrome	71313000	304.70
· Basic set for 3-hole rim mounted single lever bath mixer		13439180	333.40
Basic set for 3-hole rim mounted single lever bath mixer · consists of: basic set, shower holder, shower hose · maximum pull-out length of hand shower: 1.60 m · maintenance opening required · connection dimension: G ½ · ceramic cartridge		13439180	333.40
4-hole rim mounted bath mixer · consists of: 4-hole rim mounted bath mixer, hand shower, shower holder · projection 111 mm · connection type: basic set · maximum pull-out length of hand shower: 1.60 m · flow rate at 3 bar: 22 l/ min · non-return valve · connection dimension: DN15 · with integrated safety combination EN1717 **Consisting of:** · Hand shower 1jet (# 28580000) **Required parts:**	Chrome	71314000	304.70
· Basic set for 4-hole rim mounted bath mixer		13244180	275.20
Basic set for 4-hole rim mounted bath mixer · consists of: basic set, shower holder, shower hose · maximum pull-out length of hand shower: 1.60 m · maintenance opening required · suitable for 4-hole rim mounted bath mixer · connection thread: G ½ · connection dimension: DN15 · ceramic valves hot/ cold 90°		13244180	275.20

Measurements within scale drawings are in mm.

Shower

	finish	code no.	Euro



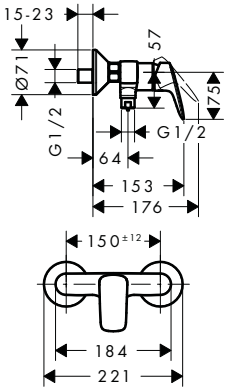

Single lever shower mixer for exposed installation

Chrome 71600000 87.50

- 1 function
- connection type: s-shaped connections
- centre distance: 150 ± 12 mm
- flow rate of hand shower at 3 bar: 17 l/ min
- ceramic cartridge
- temperature limitation adjustable
- non-return valve
- with silencer
- hose connection DN15
- connection dimension: DN15

Alternative products:

- Single lever shower mixer for exposed installation with centre distance 15.3 cm — Chrome 71630000 93.00
- Single lever shower mixer for exposed installation with 2 flow rates — Chrome 71601000 87.50



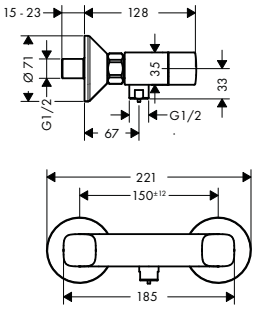

2-handle shower mixer for exposed installation

Chrome 71263000 103.90

- connection type: s-shaped connections
- centre distance: 150 ± 12 mm
- flow rate of hand shower at 3 bar: 17 l/ min
- ceramic valves hot/ cold 90°
- non-return valve
- with silencer
- suitable for continous flow water heaters
- hose connection DN15



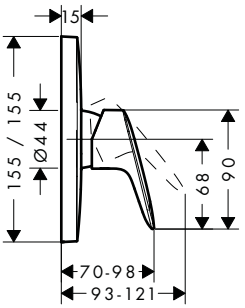

Single lever shower mixer for concealed installation

Chrome 71605000 98.50

- 1 function
- connection type: basic set
- flow rate at 3 bar: 29.3 l/ min
- ceramic cartridge
- temperature limitation adjustable

Required parts:

- Basic set iBox universal — 01800180 130.80

Optional parts:

- Extension element — Chrome 15597000 43.60



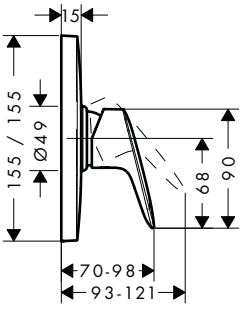

Single lever shower mixer HighFlow for concealed installation

Chrome 71607000 98.50

- flow rate at 3 bar: 49 l/ min
- ceramic cartridge (Highflow)
- temperature limitation adjustable

Required parts:

- Basic set iBox universal with shut-off unit — 01850180 169.90
- Basic set iBox universal — 01800180 130.80

Optional parts:

- Basic set for Trio diverter valve for concealed installation — 15984180 153.20

Measurements within scale drawings are in mm.

Technical specifications and units of measure are subject to change.

	finish	code no.	Euro
 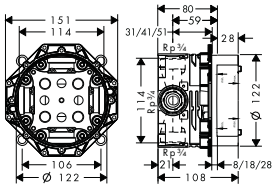			
Basic set iBox universal · suitable for all shower, bath tub and thermostat finish sets for concealed installation · connection thread · Rp ¾ · rotationally-symmetric installation · sound-decoupled installation · connection dimension: DN20		01800180	130.80
Alternative products:			
· Basic set iBox universal with shut-off unit		01850180	169.90
Optional parts:			
· Extension iBox universal basic set 2.5 cm		13595000	47.10
· Fastening rail set for iBox universal		96615000	33.40
· Assembly aid for iBox universal		93500000	12.20
 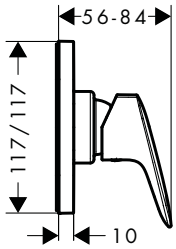			
Single lever shower mixer for concealed installation · 1 function · connection type: basic set · flow rate at 3 bar: 28.7 l/min · min. operating pressure: 1 bar · max. operating pressure: 10 bar	Chrome	71604000	32.80
Required parts:			
· Basic set for single lever shower mixer for concealed installation		13620180	105.30
 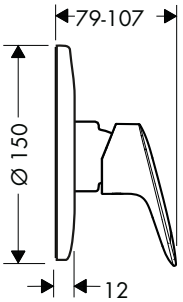			
Single lever shower mixer for concealed installation · 1 function · connection type: basic set · flow rate at 3 bar: 28.7 l/min · min. operating pressure: 1 bar · max. operating pressure: 10 bar	Chrome	71606000	32.80
Required parts:			
· Basic set for single lever shower mixer for concealed installation		13620180	105.30
 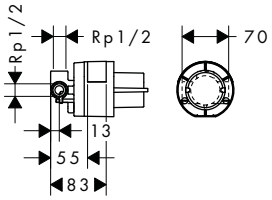			
Basic set for single lever shower mixer for concealed installation · ceramic cartridge · connection dimension: DN15		13620180	105.30
 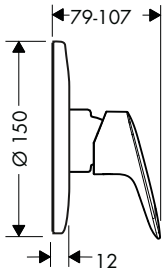			
Shower mixer set for concealed installation · consists of: single lever shower mixer, basic set · 1 function · connection type: basic set · ceramic cartridge	Chrome	71666000	122.60
Consisting of: · Basic set for single lever shower mixer for concealed installation (# 13620180) · Single lever shower mixer for concealed installation (# 71606000)			

Measurements within scale drawings are in mm.

Technical specifications and units of measure are subject to change.

Valve

		finish	code no.	Euro
	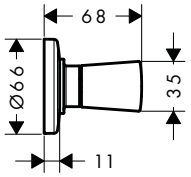	**Shut-off valve for concealed installation** · connection type: DN15/DN20	Chrome	71970000	27.40
		Required parts:			
		· Basic set 52 l/ min for shut-off valve for concealed installation spindle		15973180	80.60
		· Basic set 40 l/ min for shut-off valve for concealed installation ceramic		15974180	83.70
		· Basic set 130 l/ min for shut-off valve for concealed installation spindle		15970180	87.50
		Optional parts:			
		· Extension set 2.5 cm		96370000	45.40
	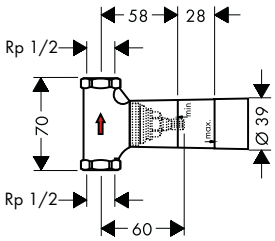	**Basic set 52 l/ min for shut-off valve for concealed installation spindle** · connection type: DN15 · suitable for all shut-off valves finish sets · flow rate: 52 l/ min · connection dimension: DN15		15973180	80.60
		Alternative products:			
		· Basic set 40 l/ min for shut-off valve for concealed installation ceramic		15974180	83.70
		· Basic set 130 l/ min for shut-off valve for concealed installation spindle		15970180	87.50
		Optional parts:			
		· Extension set 2.5 cm		96370000	45.40
	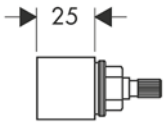	**Extension set 2.5 cm** · extension length: 25 mm		96370000	45.40

Measurements within scale drawings are in mm.

Technical specifications and units of measure are subject to change.

Electronic- and project mixers/ Care assortment



Electronic mixers	page 429		CoolStart mixers	page 432	
LowFlow mixers	page 437		Focus Care mixers	page 441	
Novus Care mixers	page 442		Unica Comfort shower sets and wall bars	page 444	
Unica Comfort Accessories	page 446		Hand showers	page 448	

Electronic- and project mixers / Care assortement

Basin



no.15170000, -400



no.31100000



no.31171000



no.31911000*



no.31913000

Bath



no.13115000



no.26320000, -400

Shower



no.13117000



no.31916000



no.26326000, -400

Accessories



no.26328400



no.26329000

* as an example

Basin - PuraVida



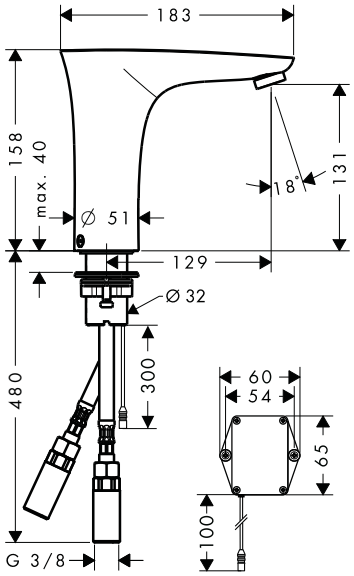

	finish	code no.	Euro
Electronic basin mixer with temperature control battery operation	Chrome	15170000	839.30
	White/Chrome	15170400	839.30

Air Power · Eco Smart · Comfort Zone

- ComfortZone 130
- projection 129 mm
- flow rate at 3 bar: 5 l/min
- theft-proof aerator
- temperature limitation adjustable
- temperature adjustable via mixer lever on the side
- non-return valve
- suitable for continous flow water heaters
- infrared sensor technology
- automatic environmental adjustment of infrared sensor
- adjustable optical range of infrared sensor (2 settings)
- battery condition indicator available
- battery operation 6 V (Lithium battery, lifetime approx. 2 years, battery included in scope of delivery)
- hygiene rinse activatable (automatic water flow for 10 seconds every 24 hours following the last operation)
- permanent rinse activatable (single water flow for 180 seconds, suitable for thermal disinfection)
- manual water stop for washbasin cleaning
- performance may be impaired if the sensor is obscured by the design of the wash basin, or when the wash basin is oversized and the distance between sensor and the wash basin edge is larger than 75 mm
- functional restriction due to too large distance
- connection dimension: DN15
- TÜV certified
- dirt filters in the connection hoses
- two filter units with fine filter to protect from incoming dirt, for assembly on existing angle valves, filter element can be removed and cleaned

Alternative products:

· Electronic basin mixer with temperature control mains connection 230 V	Chrome	15172000	874.30

Measurements within scale drawings are in mm.

Technical specifications and units of measure are subject to change.

Basin - Metris S



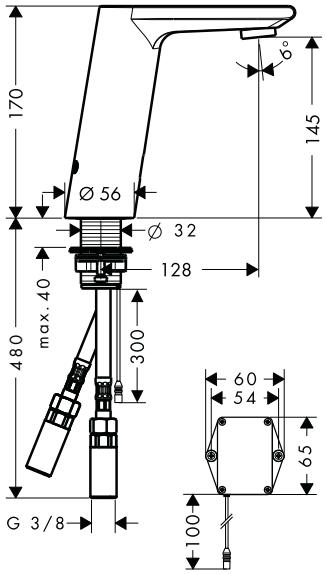

	finish	code no.	Euro
Electronic basin mixer with temperature control battery operation	Chrome	31100000	689.40

Air Power · Eco Smart · Comfort Zone

- ComfortZone 150
- projection 128 mm
- flow rate at 3 bar: 5 l/min
- theft-proof aerator
- temperature limitation adjustable
- temperature adjustable via mixer lever on the side
- non-return valve
- suitable for continous flow water heaters
- infrared sensor technology
- automatic environmental adjustment of infrared sensor
- adjustable optical range of infrared sensor (2 settings)
- battery condition indicator available
- battery operation 6 V (Lithium battery, lifetime approx. 2 years, battery included in scope of delivery)
- hygiene rinse activatable (automatic water flow for 10 seconds every 24 hours following the last operation)
- permanent rinse activatable (single water flow for 180 seconds, suitable for thermal disinfection)
- manual water stop for washbasin cleaning
- performance may be impaired if the sensor is obscured by the design of the wash basin, or when the wash basin is oversized and the distance between sensor and the wash basin edge is larger than 75 mm
- functional restriction due to too large distance
- connection dimension: DN15
- TÜV certified
- dirt filters in the connection hoses
- two filter units with fine filter to protect from incoming dirt, for assembly on existing angle valves, filter element can be removed and cleaned

Alternative products:

· Electronic basin mixer with temperature pre-adjustment battery operation	Chrome	31101000	635.80
· Electronic basin mixer with temperature control mains connection 230 V	Chrome	31102000	730.80
· Electronic basin mixer with temperature pre-adjustment mains connection 230 V	Chrome	31103000	675.70

Measurements within scale drawings are in mm.

Technical specifications and units of measure are subject to change.

Basin - Focus



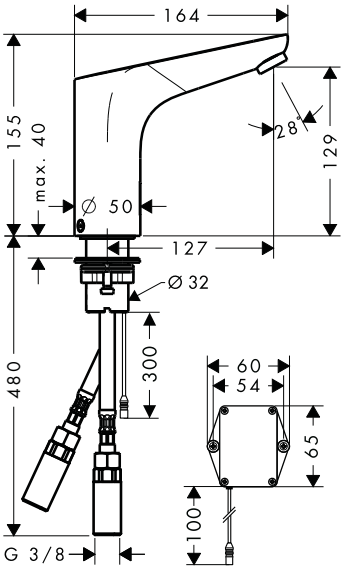

	finish	code no.	Euro
Electronic basin mixer 130 with temperature control battery operation	Chrome	31171000	472.70

Air Power · Eco Smart · Comfort Zone

- ComfortZone 130
- projection 127 mm
- flow rate at 3 bar: 5 l/min
- theft-proof aerator
- temperature limitation adjustable
- temperature adjustable via mixer lever on the side
- non-return valve
- suitable for continous flow water heaters
- infrared sensor technology
- automatic environmental adjustment of infrared sensor
- adjustable optical range of infrared sensor (2 settings)
- battery condition indicator available
- battery operation 6 V (Lithium battery, lifetime approx. 2 years, battery included in scope of delivery)
- hygiene rinse activatable (automatic water flow for 10 seconds every 24 hours following the last operation)
- permanent rinse activatable (single water flow for 180 seconds, suitable for thermal disinfection)
- manual water stop for washbasin cleaning
- performance may be impaired if the sensor is obscured by the design of the wash basin, or when the wash basin is oversized and the distance between sensor and the wash basin edge is larger than 75 mm
- functional restriction due to too large distance
- connection dimension: DN15
- TÜV certified
- dirt filters in the connection hoses
- two filter units with fine filter to protect from incoming dirt, for assembly on existing angle valves, filter element can be removed and cleaned

Alternative products:

· Electronic basin mixer with temperature pre-adjustment battery operation	Chrome	31172000	429.00
· Electronic basin mixer 130 with temperature control mains connection 230 V	Chrome	31173000	494.70
· Electronic basin mixer with temperature pre-adjustment mains connection 230 V	Chrome	31174000	473.30

Measurements within scale drawings are in mm.

Technical specifications and units of measure are subject to change.

CoolStart - Metropol



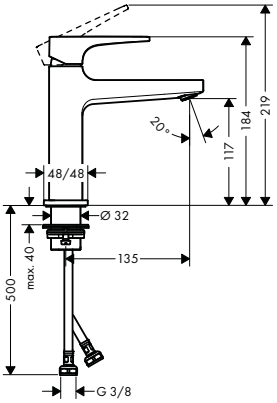

Single lever basin mixer 110 CoolStart with lever handle and push-open waste set

- consists of: single lever basin mixer, waste set
- ComfortZone 110
- projection 135 mm
- normal spray
- flow rate at 3 bar: 5 l/min
- ceramic cartridge
- temperature limitation adjustable
- suitable for continuous flow water heaters
- push-open waste set G 1¼
- material waste set: metal
- connection type: G ⅜ connections
- connection dimension: DN15
- cold water in middle position

finish	code no.	Euro
Chrome	32508000	277.50

Alternative products:

- Single lever basin mixer 110 with lever handle and pop-up waste set

Chrome	32506000	266.90

- Single lever basin mixer 110 with lever handle and push-open waste set

Chrome	32507000	272.20
Brushed Bronze	32507140	408.30
Brushed Black	32507340	408.30
Chrome Matt Black	32507670	381.10
Matt White	32507700	381.10
Polished Gold Optic	32507990	408.30



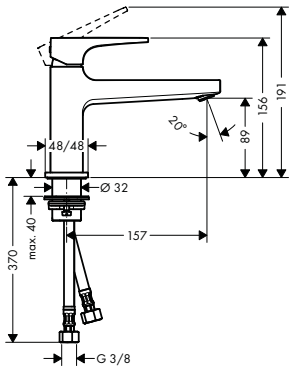

Single lever basin mixer 100 CoolStart with lever handle and push-open waste set

- consists of: single lever basin mixer, waste set
- ComfortZone 100
- projection 157 mm
- normal spray
- flow rate at 3 bar: 5 l/min
- ceramic cartridge
- temperature limitation adjustable
- suitable for continuous flow water heaters
- push-open waste set G 1¼
- material waste set: metal
- connection type: G ⅜ connections
- connection dimension: DN15
- cold water in middle position

finish	code no.	Euro
Chrome	32503000	261.60

Alternative products:

- Single lever basin mixer 100 with lever handle and push-open waste set

Chrome	32502000	256.20

CoolStart - Metris



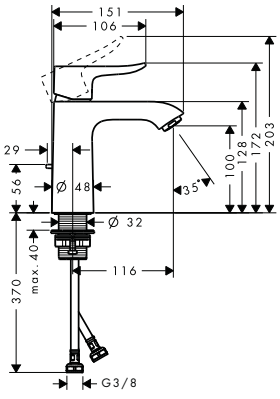

Single lever basin mixer 110 CoolStart with pop-up waste set

- consists of: single lever basin mixer, waste set
- ComfortZone 110
- normal spray
- flow rate at 3 bar: 5 l/min
- ceramic cartridge
- temperature limitation adjustable
- suitable for continuous flow water heaters
- pop-up waste set G 1¼
- material waste set: metal
- connection type: G ⅜ connections
- connection dimension: DN15
- cold water in middle position

finish	code no.	Euro
Chrome	31121000	237.10

Measurements within scale drawings are in mm.

Technical specifications and units of measure are subject to change.

CoolStart - Talis E



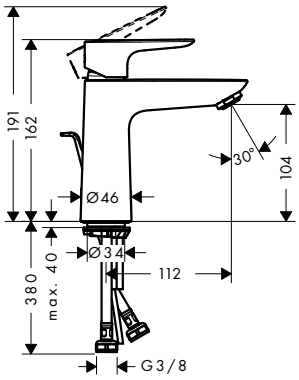

Single lever basin mixer 110 CoolStart with pop-up waste set

- consists of: single lever basin mixer, waste set
- ComfortZone 110
- projection 112 mm
- normal spray
- flow rate at 3 bar: 5 l/min
- ceramic cartridge
- temperature limitation adjustable
- suitable for continuous flow water heaters
- pop-up waste set G 1¼
- material waste set: metal
- connection type: G ⅜ connections
- connection dimension: DN15
- cold water in middle position

finish	code no.	Euro
Chrome	71713000	132.90
Brushed Bronze	71713140	199.40
Brushed Black	71713340	199.40
Chrome		
Matt Black	71713670	186.10
Matt White	71713700	186.10
Polished Gold Optic	71713990	199.40

Air Power · Eco Smart · Quick Clean · Comfort Zone · Cool Start

Alternative products:

- Single lever basin mixer 110 CoolStart without waste set

Chrome	71714000	126.00
Brushed Bronze	71714140	189.00
Brushed Black	71714340	189.00
Chrome		
Matt Black	71714670	176.40
Matt White	71714700	176.40
Polished Gold Optic	71714990	189.00



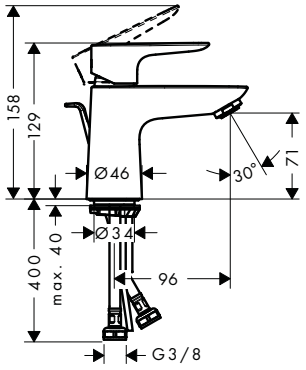

Single lever basin mixer 80 CoolStart with pop-up waste set

- consists of: single lever basin mixer, waste set
- ComfortZone 80
- projection 96 mm
- normal spray
- flow rate at 3 bar: 5 l/min
- ceramic cartridge
- temperature limitation adjustable
- suitable for continuous flow water heaters
- pop-up waste set G 1¼
- material waste set: metal
- connection type: G ⅜ connections
- connection dimension: DN15
- cold water in middle position

Chrome	71703000	108.90

Air Power · Eco Smart · Quick Clean · Comfort Zone · Cool Start

Alternative products:

- Single lever basin mixer 80 CoolStart without waste set

Chrome	71704000	102.10

Measurements within scale drawings are in mm.

Technical specifications and units of measure are subject to change.

CoolStart - Talis S



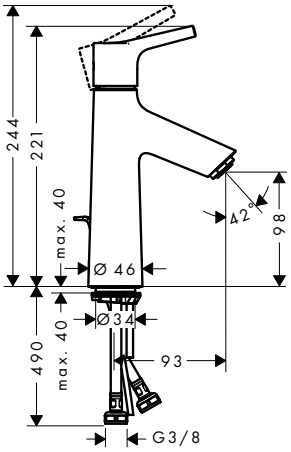

	finish	code no.	Euro
Single lever basin mixer 100 CoolStart with pop-up waste set · consists of: single lever basin mixer, waste set · ComfortZone 100 · projection 93 mm · normal spray · flow rate at 3 bar: 5 l/min · ceramic cartridge · temperature limitation adjustable · suitable for continuous flow water heaters · pop-up waste set G 1¼ · material waste set: metal · connection type: G ⅜ connections · connection dimension: DN15 · cold water in middle position	Chrome	72022000	157.00
Alternative products: · Single lever basin mixer 100 CoolStart without waste set	Chrome	72023000	150.10



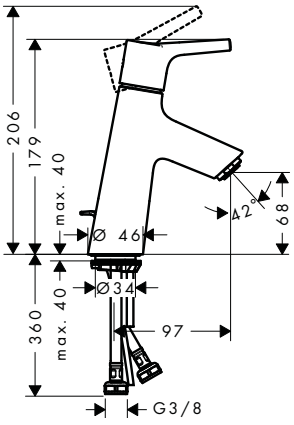

	finish	code no.	Euro
Single lever basin mixer 80 CoolStart with pop-up waste set · consists of: single lever basin mixer, waste set · ComfortZone 80 · projection 97 mm · normal spray · flow rate at 3 bar: 5 l/min · ceramic cartridge · temperature limitation adjustable · suitable for continuous flow water heaters · pop-up waste set G 1¼ · material waste set: metal · connection type: G ⅜ connections · connection dimension: DN15 · cold water in middle position	Chrome	72013000	132.90
Alternative products: · Single lever basin mixer 80 CoolStart without waste set	Chrome	72014000	126.00

CoolStart - Focus



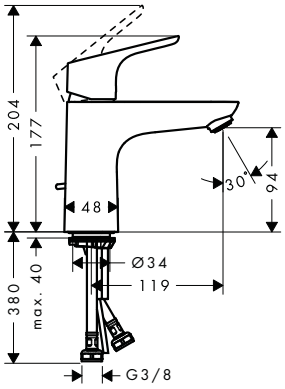

	finish	code no.	Euro
Single lever basin mixer 100 CoolStart with pop-up waste set · consists of: single lever basin mixer, waste set · ComfortZone 100 · projection 119 mm · normal spray · flow rate at 3 bar: 5 l/min · ceramic cartridge · temperature limitation adjustable · suitable for continuous flow water heaters · pop-up waste set G 1¼ · material waste set: metal · connection type: G ⅜ connections · connection dimension: DN15 · cold water in middle position	Chrome	31621000	129.50
Alternative products: · Single lever basin mixer 100 CoolStart without waste set	Chrome	31509000	123.00

Measurements within scale drawings are in mm.

Technical specifications and units of measure are subject to change.

	finish	code no.	Euro



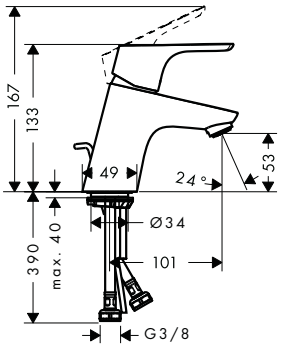

Single lever basin mixer 70 CoolStart with pop-up waste set

Chrome — 31539000 — 105.30

Air Power · Eco Smart · Quick Clean · Comfort Zone · Cool Start

- consists of: single lever basin mixer, waste set
- ComfortZone 70
- projection 101 mm
- normal spray
- flow rate at 3 bar: 5 l/min
- ceramic cartridge
- temperature limitation adjustable
- suitable for continuous flow water heaters
- pop-up waste set G 1¼
- material waste set: metal
- connection type: G ⅜ connections
- connection dimension: DN15
- cold water in middle position

Alternative products:

- Single lever basin mixer 70 with pop-up waste set — Chrome — 31730000 — 105.30

CoolStart - Focus Care



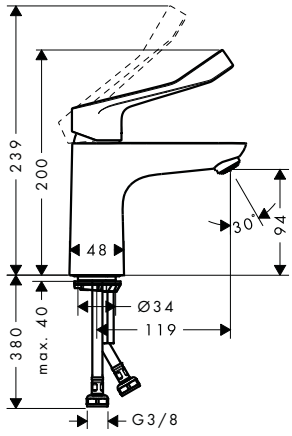

Single lever basin mixer 100 CoolStart with extra long handle without waste set

Chrome — 31917000 — 135.50

Eco Smart · Comfort Zone · Cool Start

- ComfortZone 100
- larger print for greater clarity
- with extra long barrier-free handle
- projection 119 mm
- laminar spray
- flow rate at 3 bar: 5 l/min
- ceramic cartridge
- temperature limitation adjustable
- suitable for continuous flow water heaters
- connection type: G ⅜ connections
- connection dimension: DN15
- cold water in middle position

CoolStart - Novus



reddot award 2018 winner

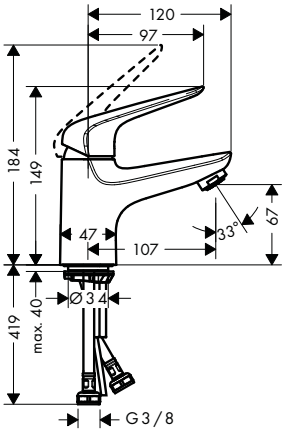

Single lever basin mixer 70 CoolStart with push-open waste set

Chrome — 71022000 — 92.20

Air Power · Eco Smart · Quick Clean · Comfort Zone · Cool Start

- consists of: single lever basin mixer, waste set
- ComfortZone 70
- projection 107 mm
- normal spray
- flow rate at 3 bar: 5 l/min
- ceramic cartridge
- temperature limitation adjustable
- suitable for continuous flow water heaters
- push-open waste set G 1¼
- material waste set: synthetic
- connection type: G ⅜ connections
- connection dimension: DN15
- cold water in middle position

Measurements within scale drawings are in mm.

Technical specifications and units of measure are subject to change.

CoolStart - Logis

	finish	code no.	Euro



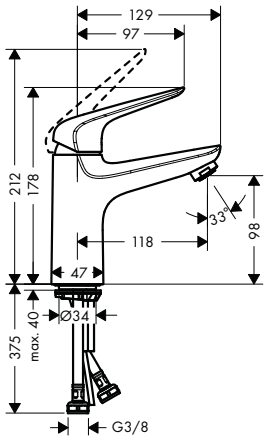

Single lever basin mixer 100 CoolStart with push-open waste set

Chrome 71032000 112.60

Air Power · Eco Smart · Quick Clean · Comfort Zone · Cool Start

- consists of: single lever basin mixer, waste set
- ComfortZone 100
- projection 118 mm
- normal spray
- flow rate at 3 bar: 5 l/min
- ceramic cartridge
- temperature limitation adjustable
- suitable for continuous flow water heaters
- push-open waste set G 1¼
- material waste set: synthetic
- connection type: G ⅜ connections
- connection dimension: DN15
- cold water in middle position



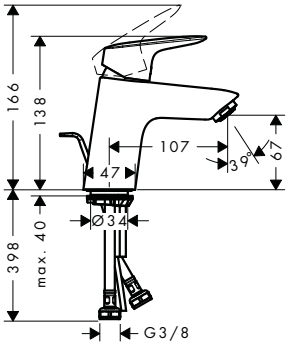

Single lever basin mixer 70 CoolStart with pop-up waste set

Chrome 71072000 76.60

Air Power · Eco Smart · Comfort Zone · Cool Start

- consists of: single lever basin mixer, waste set
- ComfortZone 70
- projection 107 mm
- normal spray
- flow rate at 3 bar: 5 l/min
- ceramic cartridge
- temperature limitation adjustable
- suitable for continuous flow water heaters
- pop-up waste set G 1¼
- material waste set: synthetic
- connection type: G ⅜ connections
- connection dimension: DN15
- cold water in middle position

Alternative products:

- Single lever basin mixer 70 CoolStart without waste set — Chrome 71073000 71.10



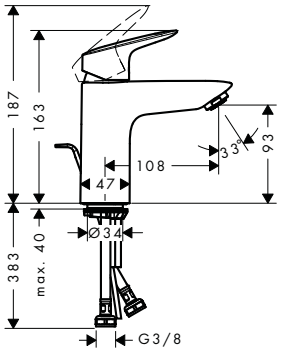

Single lever basin mixer 100 CoolStart with pop-up waste set

Chrome 71102000 98.50

Air Power · Eco Smart · Comfort Zone · Cool Start

- consists of: single lever basin mixer, waste set
- ComfortZone 100
- projection 108 mm
- normal spray
- flow rate at 3 bar: 5 l/min
- ceramic cartridge
- temperature limitation adjustable
- suitable for continuous flow water heaters
- pop-up waste set G 1¼
- material waste set: synthetic
- connection type: G ⅜ connections
- connection dimension: DN15
- cold water in middle position

Alternative products:

- Single lever basin mixer 100 CoolStart without waste set — Chrome 71103000 93.00

Measurements within scale drawings are in mm.

Technical specifications and units of measure are subject to change.

LowFlow - Metris



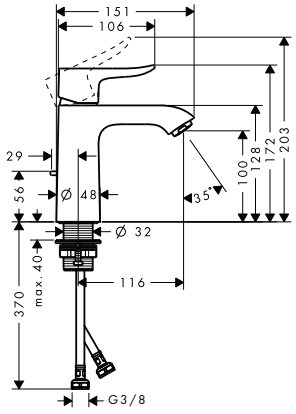

Single lever basin mixer 110 LowFlow with pop-up waste set

- consists of: single lever basin mixer, waste set
- ComfortZone 110
- projection 116 mm
- normal spray
- flow rate at 3 bar: 3.5 l/ min
- ceramic cartridge
- temperature limitation adjustable
- suitable for continuous flow water heaters
- pop-up waste set G 1¼
- material waste set: metal
- connection type: G ⅜ connections
- connection dimension: DN15

finish	code no.	Euro
Chrome	31203000	237.10

Alternative products:

	finish	code no.	Euro
· Single lever basin mixer 110 with pop-up waste set	Chrome	31080000	233.00
· Single lever basin mixer 110 LowFlow without waste set	Chrome	31204000	231.50

LowFlow - Metris S



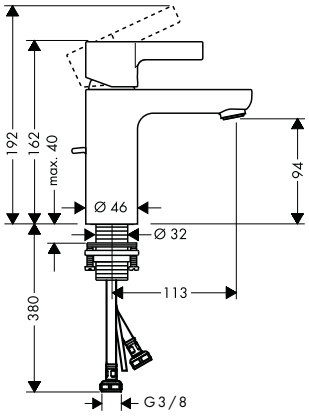

Single lever basin mixer 100 LowFlow 3.5 l/ min with pop-up waste set

- consists of: single lever basin mixer, waste set
- ComfortZone 100
- projection 113 mm
- normal spray
- flow rate at 3 bar: 3.5 l/ min
- ceramic cartridge
- temperature limitation adjustable
- suitable for continuous flow water heaters
- pop-up waste set G 1¼
- material waste set: metal
- connection type: G ⅜ connections
- connection dimension: DN15

finish	code no.	Euro
Chrome	31063000	254.50

Alternative products:

	finish	code no.	Euro
· Single lever basin mixer 100 LowFlow 2 l/ min with pop-up waste set	Chrome	31016000	256.60

LowFlow - Talis E



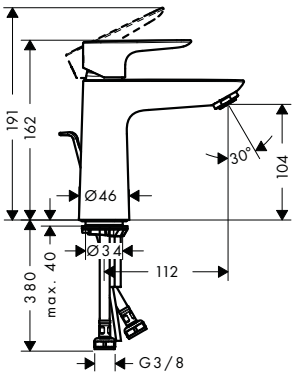

Single lever basin mixer 110 LowFlow with pop-up waste set

- consists of: single lever basin mixer, waste set
- ComfortZone 110
- projection 112 mm
- normal spray
- flow rate at 3 bar: 3.5 l/ min
- ceramic cartridge
- temperature limitation adjustable
- suitable for continuous flow water heaters
- pop-up waste set G 1¼
- material waste set: metal
- connection type: G ⅜ connections
- connection dimension: DN15

finish	code no.	Euro
Chrome	71715000	132.90

Alternative products:

	finish	code no.	Euro
· Single lever basin mixer 110 with pop-up waste set	Chrome	71710000	132.90
	Brushed Bronze	71710140	199.40
	Brushed Black Chrome	71710340	199.40
	Matt Black	71710670	186.10
	Matt White	71710700	186.10
	Polished Gold Optic	71710990	199.40

Measurements within scale drawings are in mm.

Technical specifications and units of measure are subject to change.

	finish	code no.	Euro



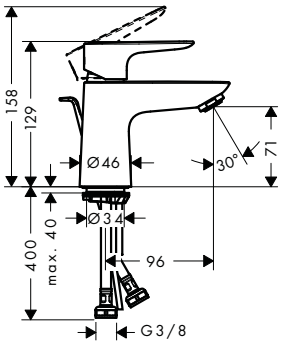

Single lever basin mixer 80 LowFlow with pop-up waste set

Chrome	71705000	108.90

Air Power · Eco Smart · Quick Clean · Comfort Zone

- consists of: single lever basin mixer, waste set
- ComfortZone 80
- projection 96 mm
- normal spray
- flow rate at 3 bar: 3.5 l/min
- ceramic cartridge
- temperature limitation adjustable
- suitable for continuous flow water heaters
- pop-up waste set G 1¼
- material waste set: metal
- connection type: G ⅜ connections
- connection dimension: DN15

Alternative products:

· Single lever basin mixer 80 with pop-up waste set	Chrome	71700000	108.90

LowFlow - Talis S



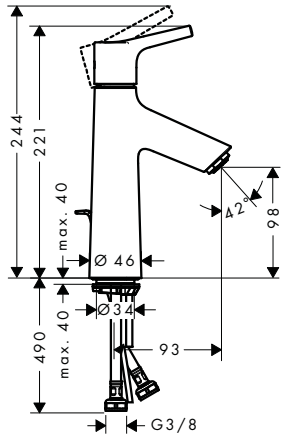

Single lever basin mixer 100 LowFlow with pop-up waste set

Chrome	72024000	157.00

Air Power · Eco Smart · Quick Clean · Comfort Zone

- consists of: single lever basin mixer, waste set
- ComfortZone 100
- projection 93 mm
- normal spray
- flow rate at 3 bar: 3.5 l/min
- ceramic cartridge
- temperature limitation adjustable
- suitable for continuous flow water heaters
- pop-up waste set G 1¼
- material waste set: metal
- connection type: G ⅜ connections
- connection dimension: DN15

Alternative products:

· Single lever basin mixer 100 with pop-up waste set	Chrome	72020000	157.00
· Single lever basin mixer 100 LowFlow without waste set	Chrome	72025000	150.10

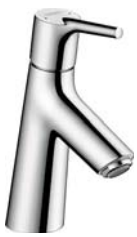

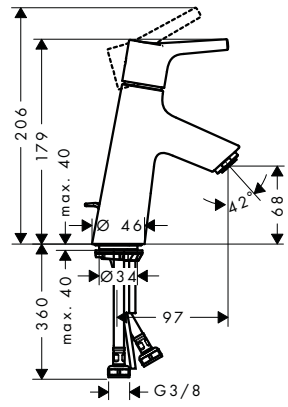

Single lever basin mixer 80 LowFlow with pop-up waste set

Chrome	72015000	132.90

Air Power · Eco Smart · Quick Clean · Comfort Zone

- consists of: single lever basin mixer, waste set
- ComfortZone 80
- projection 97 mm
- normal spray
- flow rate at 3 bar: 3.5 l/min
- ceramic cartridge
- temperature limitation adjustable
- suitable for continuous flow water heaters
- pop-up waste set G 1¼
- material waste set: metal
- connection type: G ⅜ connections
- connection dimension: DN15

Alternative products:

· Single lever basin mixer 80 with pop-up waste set	Chrome	72010000	132.90
· Single lever basin mixer 80 LowFlow without waste set	Chrome	72018000	126.00

Measurements within scale drawings are in mm.

Technical specifications and units of measure are subject to change.

LowFlow - Focus

	finish	code no.	Euro
Single lever basin mixer 70 LowFlow with pop-up waste set	Chrome	31951000	101.50



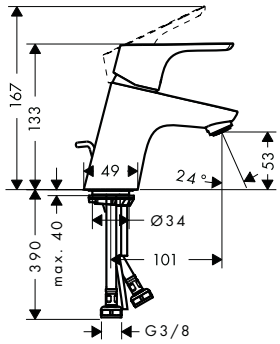

- consists of: single lever basin mixer, waste set
- ComfortZone 70
- projection 101 mm
- normal spray
- flow rate at 3 bar: 3.5 l/min
- ceramic cartridge
- temperature limitation adjustable
- suitable for continuous flow water heaters
- pop-up waste set G 1¼
- material waste set: metal
- connection type: G ⅜ connections
- connection dimension: DN15

Alternative products:

· Single lever basin mixer 70 LowFlow without waste set	Chrome	31952000	94.40



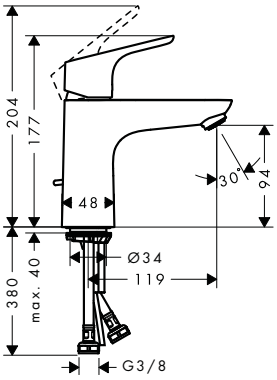

Single lever basin mixer 100 LowFlow with pop-up waste set	Chrome	31603000	124.70

- consists of: single lever basin mixer, waste set
- ComfortZone 100
- projection 119 mm
- normal spray
- flow rate at 3 bar: 3.5 l/min
- ceramic cartridge
- temperature limitation adjustable
- suitable for continuous flow water heaters
- pop-up waste set G 1¼
- material waste set: metal
- connection type: G ⅜ connections
- connection dimension: DN15

Alternative products:

· Single lever basin mixer 100 LowFlow without waste set	Chrome	31513000	118.60

LowFlow - Novus



reddot award 2018 winner

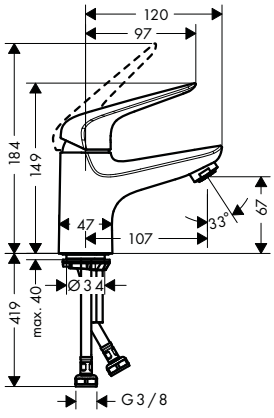

Single lever basin mixer 70 LowFlow with push-open waste set	Chrome	71024000	92.20

- consists of: single lever basin mixer, waste set
- ComfortZone 70
- projection 107 mm
- normal spray
- flow rate at 3 bar: 3.5 l/min
- ceramic cartridge
- temperature limitation adjustable
- suitable for continuous flow water heaters
- push-open waste set G 1¼
- material waste set: synthetic
- connection type: G ⅜ connections
- connection dimension: DN15

Measurements within scale drawings are in mm.

Technical specifications and units of measure are subject to change.

	finish	code no.	Euro



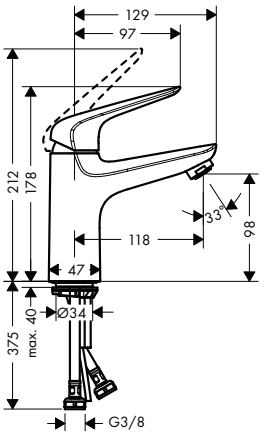

Single lever basin mixer 100 LowFlow with push-open waste set

Chrome — 71034000 — 112.60

Air Power · Eco Smart · Quick Clean · Comfort Zone

- consists of: single lever basin mixer, waste set
- ComfortZone 100
- projection 118 mm
- normal spray
- flow rate at 3 bar: 3.5 l/min
- ceramic cartridge
- temperature limitation adjustable
- suitable for continuous flow water heaters
- push-open waste set G 1¼
- material waste set: synthetic
- connection type: G ⅜ connections
- connection dimension: DN15

LowFlow - Logis



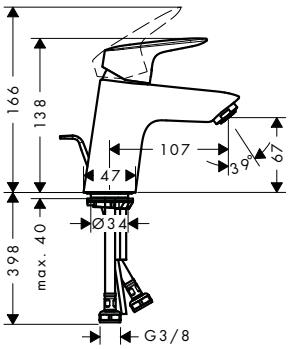

Single lever basin mixer 70 LowFlow with pop-up waste set

Chrome — 71078000 — 76.60

Air Power · Eco Smart · Comfort Zone

- consists of: single lever basin mixer, waste set
- ComfortZone 70
- projection 107 mm
- normal spray
- flow rate at 3 bar: 3.5 l/min
- ceramic cartridge
- temperature limitation adjustable
- suitable for continuous flow water heaters
- pop-up waste set G 1¼
- material waste set: synthetic
- connection type: G ⅜ connections
- connection dimension: DN15

Alternative products:

· Single lever basin mixer 70 without waste set	Chrome	71071000	71.10
· Single lever basin mixer 70 with push-open waste set	Chrome	71077000	76.60
· Single lever basin mixer 70 with 2 flow rates without waste set	Chrome	71076000	71.10
· Single lever basin mixer 70 with metal pop-up waste set	Chrome	71170000	87.20



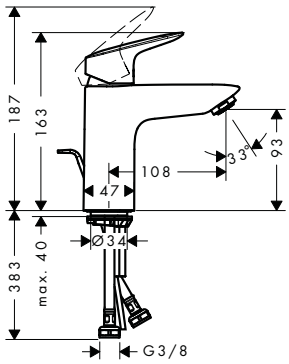

Single lever basin mixer 100 LowFlow with pop-up waste set

Chrome — 71104000 — 98.50

Air Power · Eco Smart · Comfort Zone

- consists of: single lever basin mixer, waste set
- ComfortZone 100
- projection 108 mm
- normal spray
- flow rate at 3 bar: 3.5 l/min
- ceramic cartridge
- temperature limitation adjustable
- suitable for continuous flow water heaters
- pop-up waste set G 1¼
- material waste set: synthetic
- connection type: G ⅜ connections
- connection dimension: DN15

Alternative products:

· Single lever basin mixer 100 with push-open waste set	Chrome	71107000	98.50
· Single lever basin mixer 100 with metal pop-up waste set	Chrome	71171000	109.10

Measurements within scale drawings are in mm.

Technical specifications and units of measure are subject to change.

Basin - Focus Care

	finish	code no.	Euro



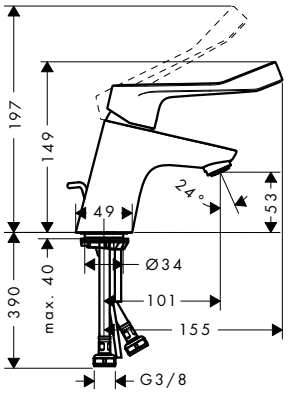

Single lever basin mixer 70 with extra long handle and pop-up waste set

Chrome — 31910000 — 115.60

Eco Smart | Comfort Zone

- consists of: single lever basin mixer, waste set
- ComfortZone 70
- larger print for greater clarity
- with extra long barrier-free handle
- projection 101 mm
- laminar spray
- flow rate at 3 bar: 5 l/min
- ceramic cartridge
- temperature limitation adjustable
- suitable for continuous flow water heaters
- pop-up waste set G 1¼
- material waste set: metal
- connection type: G ⅜ connections
- connection dimension: DN15

Alternative products:

- Single lever basin mixer 70 with extra long handle without waste set — Chrome — 31914000 — 109.70



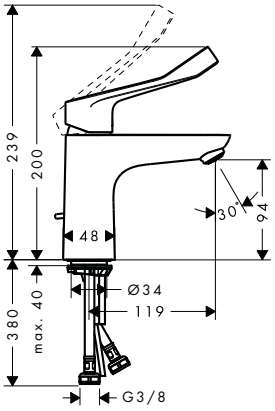

Single lever basin mixer 100 with extra long handle and pop-up waste set

Chrome — 31911000 — 141.90

Eco Smart | Comfort Zone

- consists of: single lever basin mixer, waste set
- ComfortZone 100
- larger print for greater clarity
- with extra long barrier-free handle
- projection 119 mm
- laminar spray
- flow rate at 3 bar: 5 l/min
- ceramic cartridge
- temperature limitation adjustable
- suitable for continuous flow water heaters
- pop-up waste set G 1¼
- material waste set: metal
- connection type: G ⅜ connections
- connection dimension: DN15

Alternative products:

- Single lever basin mixer 100 with extra long handle without waste set — Chrome — 31915000 — 135.50



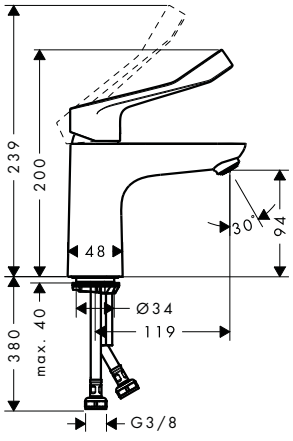

Single lever basin mixer 100 CoolStart with extra long handle without waste set

Chrome — 31917000 — 135.50

Eco Smart | Comfort Zone | Cool Start

- ComfortZone 100
- larger print for greater clarity
- with extra long barrier-free handle
- projection 119 mm
- laminar spray
- flow rate at 3 bar: 5 l/min
- ceramic cartridge
- temperature limitation adjustable
- suitable for continuous flow water heaters
- connection type: G ⅜ connections
- connection dimension: DN15
- cold water in middle position

Measurements within scale drawings are in mm.

Technical specifications and units of measure are subject to change.

	finish	code no.	Euro



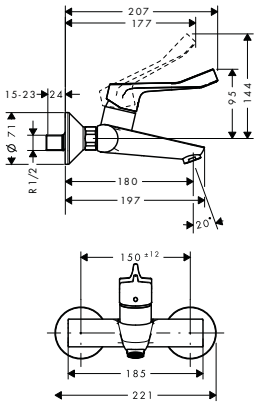

Single lever basin mixer for exposed installation with extra long handle

Chrome | 31913000 | 147.70

Eco Smart

- larger print for greater clarity
- with extra long barrier-free handle
- projection 180 mm
- centre distance: 150 ± 12 mm
- laminar spray
- flow rate at 3 bar: 5 l/ min
- ceramic cartridge
- temperature limitation adjustable
- with noise reduction
- suitable for continuous flow water heaters
- connection type: s-shaped connections
- connection dimension: DN15

Shower - Focus Care



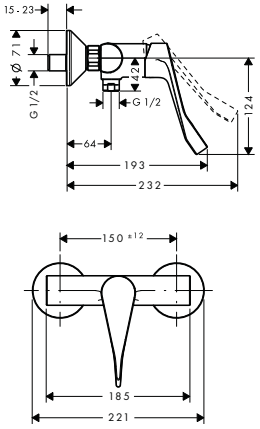

Single lever shower mixer for exposed installation with extra long handle

Chrome | 31916000 | 119.10

- larger print for greater clarity
- with extra long barrier-free handle
- 1 function
- connection type: s-shaped connections
- centre distance: 150 ± 12 mm
- flow rate at 3 bar: 22 l/ min
- ceramic cartridge
- temperature limitation adjustable
- non-return valve
- with silencer
- hose connection DN15
- connection dimension: DN15

Basin - Novus Care



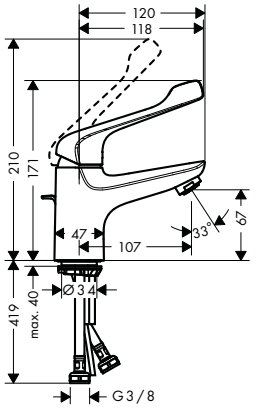

Single lever basin mixer 70 with extra long handle and pop-up waste set

Chrome | 71920000 | 101.40

Air Power · Eco Smart · Quick Clean · Comfort Zone

- consists of: single lever basin mixer, waste set
- ComfortZone 70
- larger print for greater clarity
- with extra long barrier-free handle
- projection 107 mm
- normal spray
- flow rate at 3 bar: 5 l/ min
- ceramic cartridge
- temperature limitation adjustable
- suitable for continuous flow water heaters
- pop-up waste set G 1¼
- material waste set: metal
- connection type: G ⅜ connections
- connection dimension: DN15

Alternative sizes:

- Single lever basin mixer 100 with extra long handle and pop-up waste set — Chrome | 71921000 | 123.90

Measurements within scale drawings are in mm.

Technical specifications and units of measure are subject to change.

	finish	code no.	Euro
Single lever basin mixer 100 with extra long handle and pop-up waste set	Chrome	71921000	123.90



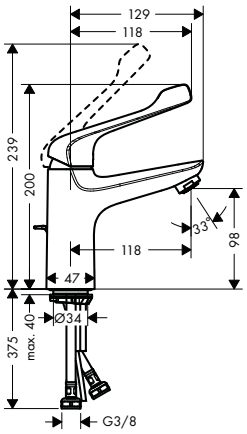

- consists of: single lever basin mixer, waste set
- ComfortZone 100
- larger print for greater clarity
- with extra long barrier-free handle
- projection 118 mm
- normal spray
- flow rate at 3 bar: 5 l/ min
- ceramic cartridge
- temperature limitation adjustable
- suitable for continuous flow water heaters
- pop-up waste set G 1¼
- material waste set: metal
- connection type: G ⅜ connections
- connection dimension: DN15

Alternative sizes:

· Single lever basin mixer 70 with extra long handle and pop-up waste set	Chrome	71920000	101.40

Single lever basin mixer for exposed installation with extra long handle	Chrome	71923000	141.30



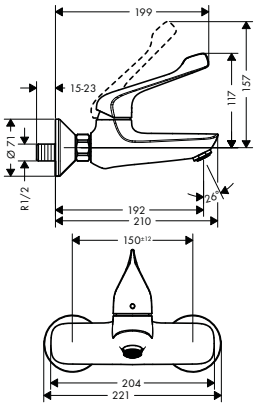

- larger print for greater clarity
- with extra long barrier-free handle
- projection 192 mm
- centre distance: 150 ± 12 mm
- normal spray
- flow rate at 3 bar: 5 l/ min
- ceramic cartridge
- temperature limitation adjustable
- with noise reduction
- suitable for continuous flow water heaters
- connection type: s-shaped connections
- connection dimension: DN15

Shower - Novus Care

Single lever shower mixer for exposed installation with extra long handle	Chrome	71926000	107.50



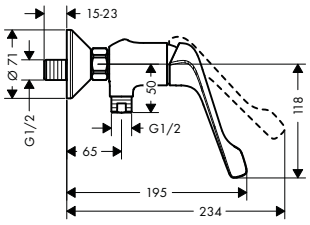

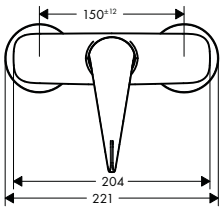

- larger print for greater clarity
- with extra long barrier-free handle
- 1 function
- connection type: s-shaped connections
- centre distance: 150 ± 12 mm
- ceramic cartridge
- temperature limitation adjustable
- non-return valve
- with silencer
- hose connection DN15
- connection dimension: DN15

Measurements within scale drawings are in mm.

Technical specifications and units of measure are subject to change.

Unica Comfort shower sets



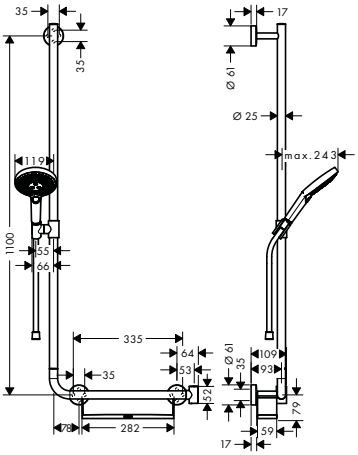

	finish	code no.	Euro
Shower set 120 3jet with shower bar 110 cm left	Chrome	26324000	385.60
	White/Chrome	26324400	385.60

Select · Air Power · Quick Clean · XXL Performance

- consists of: hand shower, shower bar, shelf, shower hose, slider
- shower head size: 125 mm
- spray type: RainAir, Rain, Whirl
- wallbar could be also used as grab bar
- shelf made of plastic, finish white
- shelf can be removed for cleaning
- convenient diversion via Select button
- pivot connector prevent hose from tangling
- shower holder can be removed
- 90° position adjustable slider, pivots left and right, up and down
- TÜV certified
- metal shower slide
- maximum flow rate at 3 bar: 15 l/min
- bar width: 25 mm
- wall supports of metal

Consisting of:
- Hand shower 120 3jet (# 26530XXX)
- Shower bar Comfort 110 cm left (# 26403400)
- Shower hose 160 cm (# 28276XXX)

Alternative sizes:

Shower set 120 3jet with shower bar 110 cm right	Chrome	26326000	385.60
	White/Chrome	26326400	385.60

Water saving EcoSmart version:

Shower set 120 3jet EcoSmart 9 l/min with shower bar 110 cm left	Chrome	26325000	385.60
	White/Chrome	26325400	385.60

Optional parts:

Foot support Comfort	Chrome	26329000	143.20



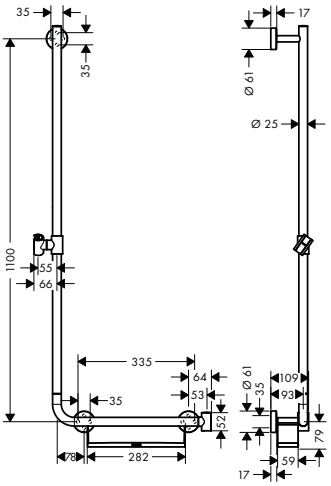

	finish	code no.	Euro
Shower bar Comfort 110 cm left	White/Chrome	26403400	297.40

- consists of: shower bar, shelf, slider
- infinitely height-adjustable
- shower holder can be removed
- 90° position adjustable slider, pivots left and right, up and down
- shelf made of plastic, finish white, shelf can be removed for cleaning
- bar width: 25 mm
- metal shower slide
- wall supports of metal

Alternative products:

Shower bar Comfort 110 cm right	White/Chrome	26404400	297.40

Optional parts:

Foot support Comfort	Chrome	26329000	143.20

Measurements within scale drawings are in mm.

Technical specifications and units of measure are subject to change.



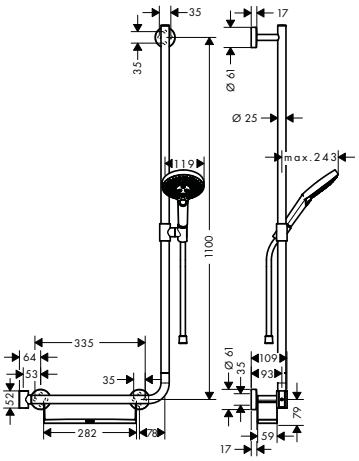

	finish	code no.	Euro
Shower set 120 3jet with shower bar 110 cm right	Chrome	26326000	385.60
	White/Chrome	26326400	385.60

Select · Air Power · Quick Clean · XXL Performance

- consists of: hand shower, shower bar, shelf, shower hose, slider
- shower head size: 125 mm
- spray type: RainAir, Rain, Whirl
- wallbar could be also used as grab bar
- shelf made of plastic, finish white
- shelf can be removed for cleaning
- convenient diversion via Select button
- pivot connector prevent hose from tangling
- shower holder can be removed
- 90° position adjustable slider, pivots left and right, up and down
- TÜV certified
- metal shower slide
- maximum flow rate at 3 bar: 15 l/min
- bar width: 25 mm
- wall supports of metal

Consisting of:
- Shower bar Comfort 110 cm right (# 26404400)
- Hand shower 120 3jet (# 26530XXX)
- Shower hose 160 cm (# 28276XXX)

Alternative sizes:

· Shower set 120 3jet with shower bar 110 cm left	Chrome	26324000	385.60
	White/Chrome	26324400	385.60

Water saving EcoSmart version:

· Shower set 120 3jet EcoSmart 9 l/min with shower bar 110 cm right	Chrome	26327000	385.60
	White/Chrome	26327400	385.60

Optional parts:

· Foot support Comfort	Chrome	26329000	143.20



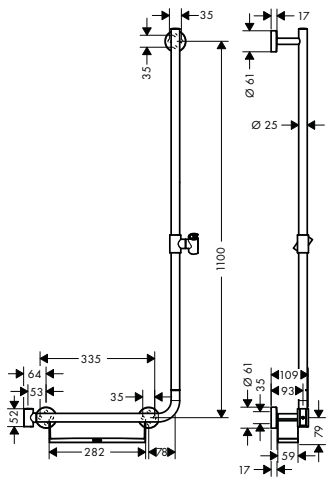

	finish	code no.	Euro
Shower bar Comfort 110 cm right	White/Chrome	26404400	297.40

- consists of: shower bar, shelf, slider
- infinitely height-adjustable
- shower holder can be removed
- 90° position adjustable slider, pivots left and right, up and down
- shelf can be removed for cleaning
- bar width: 25 mm
- metal shower slide
- slide with locking mechanism
- wall supports of metal

Alternative products:

· Shower bar Comfort 110 cm left	White/Chrome	26403400	297.40

Optional parts:

· Foot support Comfort	Chrome	26329000	143.20

Measurements within scale drawings are in mm.

Technical specifications and units of measure are subject to change.

	finish	code no.	Euro



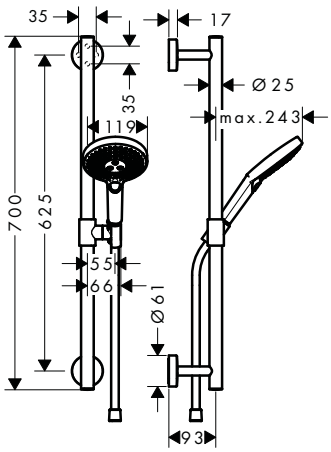

Shower set 120 3jet with shower bar 65 cm

Chrome 26320000 264.40
White/Chrome 26320400 264.40

Select · Air Power · Quick Clean · XXL Performance

- consists of: hand shower, shower bar, shower hose, slider
- shower head size: 125 mm
- spray type: Rain, RainAir, Whirl
- wallbar could be also used as grab bar
- convenient diversion via Select button
- pivot connector prevent hose from tangling
- 90° position adjustable slider, pivots left and right, up and down
- TÜV certified
- metal shower slide
- maximum flow rate at 3 bar: 15 l/min
- bar width: 25 mm
- wall supports of metal

Consisting of:
- Hand shower 120 3jet (# 26530XXX)
- Shower bar Comfort 65 cm (# 26401000)
- Shower hose 160 cm (# 28276XXX)

Alternative sizes:

· Shower set 120 3jet with shower bar 90 cm	Chrome	26322000	275.40
	White/Chrome	26322400	275.40
· Shower set 120 3jet EcoSmart 9 l/min with shower bar 90 cm	Chrome	26323000	275.40
	White/Chrome	26323400	275.40

Water saving EcoSmart version:

· Shower set 120 3jet EcoSmart 9 l/min with shower bar 65 cm	Chrome	26321000	264.40
	White/Chrome	26321400	264.40

Optional parts:

· Grab handle Comfort with shelf and shower holder	White/Chrome	26328400	139.60
· Foot support Comfort	Chrome	26329000	143.20



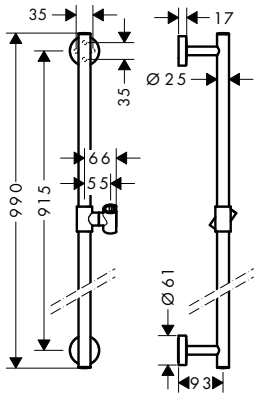

Shower bar Comfort 90 cm

Chrome 26402000 187.20

- consists of: shower bar, slider
- infinitely height-adjustable
- 90° position adjustable slider, pivots left and right, up and down
- bar width: 25 mm
- metal shower slide
- wall supports of metal

Alternative sizes:

· Shower bar Comfort 65 cm	Chrome	26401000	176.30

Optional parts:

· Grab handle Comfort with shelf and shower holder	White/Chrome	26328400	139.60
· Foot support Comfort	Chrome	26329000	143.20

Unica Comfort grab bar



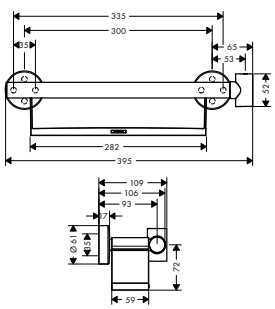

Grab handle Comfort with shelf and shower holder

White/Chrome 26328400 139.60

- consists of: grab bar, shelf, shower holder
- TÜV certified
- shower holder can be installed on both sides
- shower holder can be removed
- shelf made of plastic, finish white
- shelf can be removed for cleaning
- fixed holding position
- for hoses with conical nut
- bar width: 25 mm

Optional parts:

· Foot support Comfort	Chrome	26329000	143.20

Measurements within scale drawings are in mm.

Technical specifications and units of measure are subject to change.

	finish	code no.	Euro
Unica Comfort foot rest			
 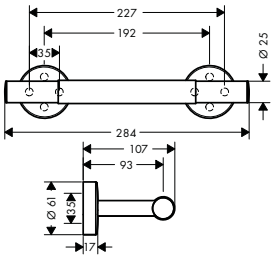			
Foot support Comfort · TÜV certified · antislip foot rest	Chrome	26329000	143.20
Thermostatic mixers			
 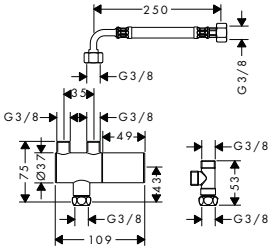			
Under-basin thermostat for exposed installation · the thermostat offers the possibility for thermal disinfection · connection dimension: G ⅜	Chrome	15346000	259.20
 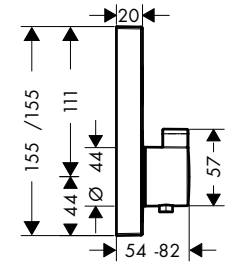			
Thermostat for concealed installation for 1 function · 1 function · Select push-button on/off control for 1 outlet · flow rate hand shower connection at 3 bar: 26 l/ min · thermostat cartridge, Select valve · min. operating pressure: 1 bar · max. operating pressure: 10 bar · safety lock at 40° C · temperature limitation adjustable · connection type: basic set · Thermostat is delivered with button On/ Off	Chrome	15762000	536.90
Required parts:			
· Basic set iBox universal		01800180	130.80
Optional parts:			
· Extension element	Chrome	13593000	43.70
· Extension iBox universal basic set 2.5 cm		13595000	47.10
 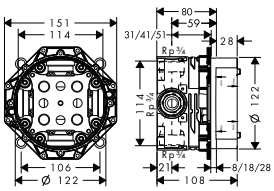			
Basic set iBox universal · suitable for all shower, bath tub and thermostat finish sets for concealed installation · connection thread · Rp ¾ · rotationally-symmetric installation · sound-decoupled installation · connection dimension: DN20		01800180	130.80
Alternative products:			
· Basic set iBox universal with shut-off unit		01850180	169.90
Optional parts:			
· Extension iBox universal basic set 2.5 cm		13595000	47.10
· Fastening rail set for iBox universal		96615000	33.40
· Assembly aid for iBox universal		93500000	12.20

Measurements within scale drawings are in mm.

Technical specifications and units of measure are subject to change.

Hand showers 6 l/ min

	finish	code no.	Euro



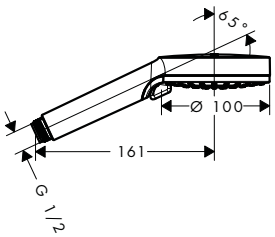

Hand shower Vario Green 6 l/ min

White/Chrome — 26336400 — 21.90

Eco Smart · Quick Clean · XXL Performance

- shower head size: 100 mm
- spray type: Rain, IntenseRain
- spray type adjustment by turning spray disc
- maximum flow rate at 3 bar: 5.7 l/ min
- with internal water conduction
- rinseable dirt filter
- connection thread G ½
- connection dimension: DN15
- suitable for continous flow water heaters

Water saving EcoSmart version:

- Hand shower Vario EcoSmart 9 l/ min — White/Chrome — 26332400 — 21.90



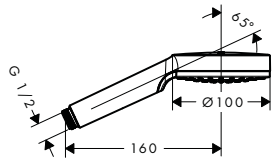

Hand shower 1jet Green 6 l/ min

White/Chrome — 26334400 — 19.80

Eco Smart · Quick Clean · XXL Performance

- shower head size: 100 mm
- spray type: Rain
- maximum flow rate at 3 bar: 5.7 l/ min
- with internal water conduction
- rinseable dirt filter
- connection thread G ½
- connection dimension: DN15
- suitable for continous flow water heaters



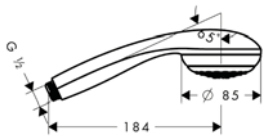

Hand shower Mono Green 6 l/ min

Chrome — 28561000 — 27.70

Eco Smart · Quick Clean

- shower head size: 85 mm
- spray type: normal spray
- maximum flow rate at 3 bar: 6 l/ min
- with internal water conduction
- rinseable dirt filter
- connection thread G ½
- connection dimension: DN15

Bidette



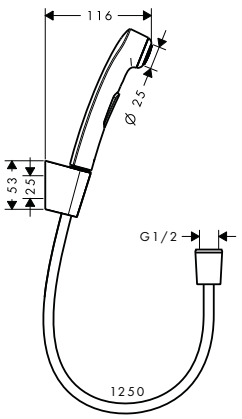

Bidette hand shower 1jet with shower holder and pressure shower hose 125 cm

Chrome — 32129000 — 80.80

Eco Smart · Quick Clean

- consists of: bidette hand shower, shower holder, chrome-colored shower hose
- maximum flow rate at 3 bar: 6 l/ min
- with non-return valve
- additional comment: surface shower hose chrome

Consisting of:

- Shower holder Porter S (# 28331XXX)

Alternative sizes:

- Bidette hand shower 1jet with shower holder and pressure shower hose 160 cm — Chrome — 32128000 — 82.50

Accessories



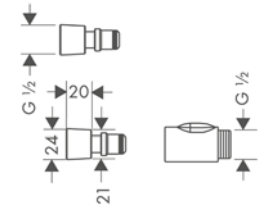

Quick-coupling set

Chrome — 28346000 — 23.20

- material: plastic
- removable
- connection dimension DN15

Measurements within scale drawings are in mm.

Technical specifications and units of measure are subject to change.

Accessories



Rainfinity	page 450		Logis	page 450	
Unica Comfort Accessories	page 452		Logis Universal	page 453	
RainScent	page 456	 			

		finish	code no.	Euro
Rainfinity				
 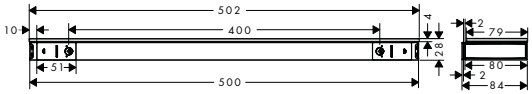	Shelf 500 · surface of the shelf at colour variant -000 = mirror glass, at colour variant -700 = graphite colour, satined · shelf made of safety glass · wall-mounted · length 500 mm	Chrome Matt White	26844000 26844700	253.30 329.20
Logis				
 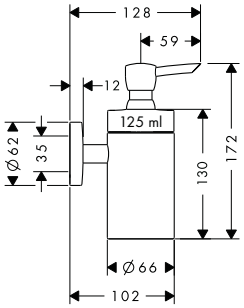	Liquid soap dispenser · wall-mounted · filling capacity 125 ml · dosage 1.5 ml · material holder: metal	Chrome Brushed Nickel	40514000 40514820	114.30 171.40
 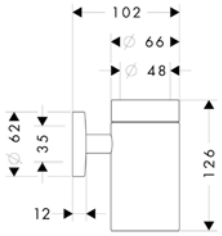	Toothbrush tumbler · wall-mounted · material holder: metal	Chrome Brushed Nickel	40518000 40518820	71.70 107.60
 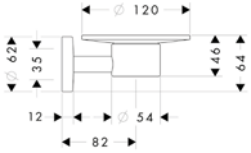	Soap dish · material: brass, crystal glass · wall-mounted · material holder: metal	Chrome Brushed Nickel	40515000 40515820	71.70 107.60
 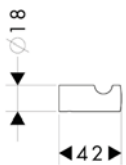	Single hook · material: brass · wall-mounted · material holder: metal	Chrome Brushed Nickel	40511000 40511820	17.20 25.80
 	Towel holder twin-handle · wall-mounted · material holder: metal · length 445 mm · swivelling	Chrome Brushed Nickel	40512000 40512820	85.70 128.60

Measurements within scale drawings are in mm.

Technical specifications and units of measure are subject to change.

	finish	code no.	Euro
Grab bar · drilling distance 300 mm · wall-mounted · material holder: metal · length 466 mm · TÜV certified	Chrome Brushed Nickel	40513000 40513820	85.70 128.60
Bath towel rail · drilling distance 600 mm · wall-mounted · material holder: metal · length 763 mm	Chrome Brushed Nickel	40516000 40516820	100.10 150.10
Roll holder with cover · wall-mounted · material holder: metal	Chrome Brushed Nickel	40523000 40523820	71.70 107.60
Roll holder without cover · wall-mounted · material holder: metal	Chrome Brushed Nickel	40526000 40526820	57.20 85.90
Toilet brush holder wall-mounted · material holder: metal · material: brass, crystal glass · wall-mounted	Chrome Brushed Nickel	40522000 40522820	128.60 192.90
Optional parts: · Replacement toilet brush without stick · Replacement toilet brush without stick	Black White	40068000 40088000	16.50 16.50
Spare roll holder · wall-mounted · for spare rolls	Chrome Brushed Nickel	40517000 40517820	57.20 85.90

Measurements within scale drawings are in mm.

Technical specifications and units of measure are subject to change.

		finish	code no.	Euro
 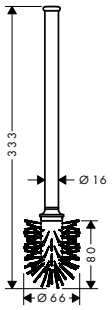	Replacement toilet brush with handle	Chrome	40089000	51.80
 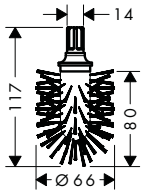	Replacement toilet brush without stick	White	40088000	16.50
 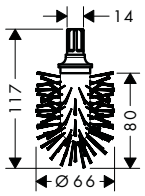	Replacement toilet brush without stick	Black	40068000	16.50
Unica Comfort grab bar  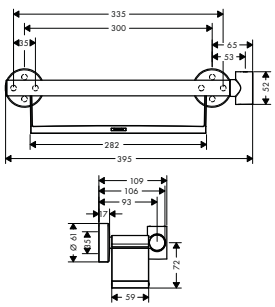	Grab handle Comfort with shelf and shower holder · consists of: grab bar, shelf, shower holder · TÜV certified · shower holder can be installed on both sides · shower holder can be removed · shelf made of plastic, finish white · shelf can be removed for cleaning · fixed holding position · for hoses with conical nut · bar width: 25 mm	White/Chrome	26328400	139.60
	Optional parts: · Foot support Comfort	Chrome	26329000	143.20
Unica Comfort foot rest  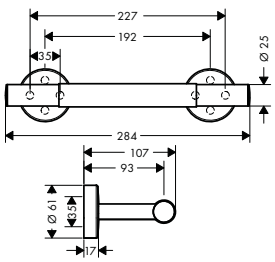	Foot support Comfort · TÜV certified · antislip foot rest	Chrome	26329000	143.20

Measurements within scale drawings are in mm.

Technical specifications and units of measure are subject to change.

Logis Universal Accessories

	finish	code no.	Euro
Toothbrush tumbler · wall-mounted · material holder: metal	Chrome	41718000	25.90
Liquid soap dispenser · wall-mounted · filling capacity 200 ml · dosage 2 ml · material holder: metal	Chrome	41714000	36.30
Soap dish · material: brass, glass · wall-mounted · material holder: metal	Chrome	41715000	25.90
Corner basket · can be used additional as a shelf · material: brass · wall-mounted · material holder: metal	Chrome	41710000	25.90
Grab bar · drilling distance 300 mm · wall-mounted · material holder: metal · length 345 mm · TÜV certified	Chrome	41713000	41.50
Bath towel rail · drilling distance 600 mm · wall-mounted · material holder: metal · length 644 mm	Chrome	41716000	41.50

Measurements within scale drawings are in mm.

Technical specifications and units of measure are subject to change.

	finish	code no.	Euro
Towel rack with towel holder · material holder: metal · wall-mounted · length 600 mm	Chrome	41720000	72.60
Double bath towel rail · drilling distance 600 mm · wall-mounted · material holder: metal · length 644 mm	Chrome	41712000	51.90
Towel ring · material holder: metal · wall-mounted	Chrome	41724000	25.90
Single hook · material: brass · wall-mounted · material holder: metal	Chrome	41711000	7.80
Double hook · material: brass · wall-mounted · material holder: metal	Chrome	41725000	15.60
Roll holder with cover · wall-mounted · material holder: metal	Chrome	41723000	36.30

Measurements within scale drawings are in mm.

Technical specifications and units of measure are subject to change.

	finish	code no.	Euro
Spare roll holder · wall-mounted · material holder: metal	Chrome	41726000	25.90



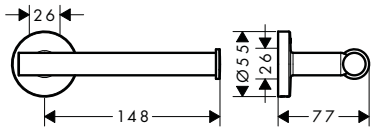

Double roll holder · wall-mounted · for 2 paper rolls	Chrome	41717000	25.90



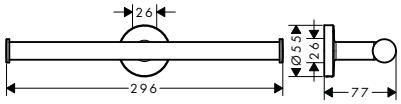

Toilet brush holder wall-mounted · material holder: metal · material: brass, glass · wall-mounted	Chrome	41722000	36.30
Optional parts: · Replacement toilet brush with handle	Chrome	93286000	26.40



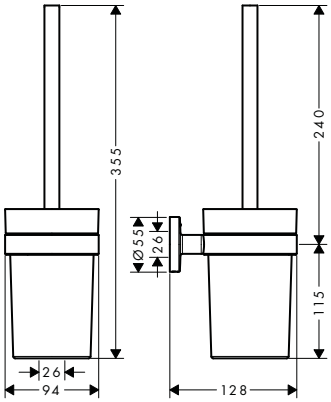

Shaving mirror · inclinable · material: metal · wall-mounted · enlargement: 3 x magnification · swivelling	Chrome	73561000	62.20



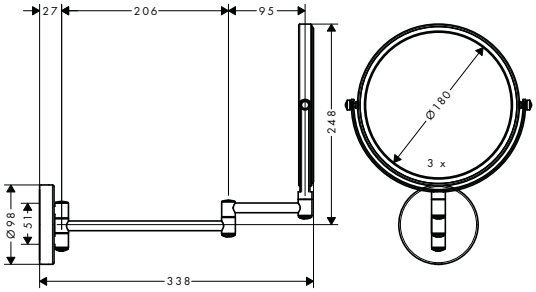

Measurements within scale drawings are in mm.

Technical specifications and units of measure are subject to change.

	finish	code no.	Euro
			
Bath-accessory set 5 in 1 · consists of: towel rack with towel holder, roll holder, toilet brush, double towel hook **Consisting of:** · Towel rack with towel holder (# 41720000) · Bath towel rail (# 41716000) · Double hook (# 41725000) · Toilet brush holder wall-mounted (# 41722000) · Roll holder with cover (# 41723000)	Chrome	41728000	186.70
			
Bath-accessory set 3 in 1 · consists of: double bath towel rail, roll holder, toilet brush **Consisting of:** · Double bath towel rail (# 41712000) · Roll holder with cover (# 41723000) · Toilet brush holder wall-mounted (# 41722000)	Chrome	41727000	114.10
RainScent   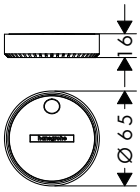 			
Starter kit (1 case + 2 shower tabs) · consists of: Case, 2 shower tabs rosemary/citrus + lavender · by light pressure on the trough the lid tilts to insert the shower tab · suitable for round shower tabs with a diameter of 35 mm and a thickness of 12 mm · opening and flow slots for entry and exit of water at the bottom · matching scents to the RainTunes scenarios good morning/ recreation and good night/ relaxation · optimum fragrance development · full protection for shower tabs · case is dishwasher safe · design matches hansgrohe RainButtons · suitable for shower	Matt White	21140700	14.70
Optional parts:			
· Wellness kit rosemary/citrus (package of 5 shower tabs)		21141000	10.00
· Wellness kit lavender (package of 5 shower tabs)		21142000	10.00
· Wellness kit pomegranate (package of 5 shower tabs)		21143000	10.00
· Wellness kit bergamot (package of 5 shower tabs)		21144000	10.00
· Wellness kit silver fir (package of 5 shower tabs)		21145000	10.00
· Wellness kit mix (package of 5 shower tabs)		21146000	10.00

Measurements within scale drawings are in mm.

Technical specifications and units of measure are subject to change.

	finish	code no.	Euro
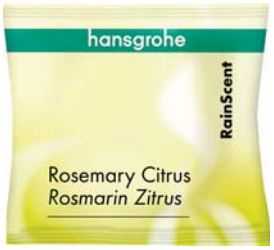			
Wellness kit rosemary/citrus (package of 5 shower tabs) · matching scent to the RainTunes scenarios good morning and recreation · with natural essential oils · complete dissolution within a shower session · vegan and without microplastics · scent protective packaging · 30 months shelf life · size: diameter: 35 mm, height: 12 mm · suitable for shower		21141000	10.00
Optional parts: · Starter kit (1 case + 2 shower tabs)	Matt White	21140700	14.70
			
Wellness kit lavender (package of 5 shower tabs) · matching scent to the RainTunes scenarios good night and relaxation · with natural essential oils · complete dissolution within a shower session · vegan and without microplastics · scent protective packaging · 30 months shelf life · size: diameter: 35 mm, height: 12 mm · suitable for shower		21142000	10.00
Optional parts: · Starter kit (1 case + 2 shower tabs)	Matt White	21140700	14.70
			
Wellness kit pomegranate (package of 5 shower tabs) · matching scent to the RainTunes scenario beauty · with natural essential oils · complete dissolution within a shower session · vegan and without microplastics · scent protective packaging · 30 months shelf life · size: diameter: 35 mm, height: 12 mm · suitable for shower		21143000	10.00
Optional parts: · Starter kit (1 case + 2 shower tabs)	Matt White	21140700	14.70
			
Wellness kit bergamot (package of 5 shower tabs) · matching scent to the RainTunes scenario vitality · with natural essential oils · complete dissolution within a shower session · vegan and without microplastics · scent protective packaging · 30 months shelf life · size: diameter: 35 mm, height: 12 mm · suitable for shower		21144000	10.00
Optional parts: · Starter kit (1 case + 2 shower tabs)	Matt White	21140700	14.70

Measurements within scale drawings are in mm.

Technical specifications and units of measure are subject to change.

	finish	code no.	Euro
			
Wellness kit silver fir (package of 5 shower tabs) · matching scent to the RainTunes scenario nature · with natural essential oils · complete dissolution within a shower session · vegan and without microplastics · scent protective packaging · 30 months shelf life · size: diameter: 35 mm, height: 12 mm · suitable for shower		21145000	10.00
Optional parts: · Starter kit (1 case + 2 shower tabs)	Matt White	21140700	14.70
			
Wellness kit mix (package of 5 shower tabs) · consists of: each 1 tab of varieties rosemayr/citrus, lavender, pomegranate, bergamot, silver fir · matching scents to the RainTunes scenarios · with natural essential oils · complete dissolution within a shower session · vegan and without microplastics · scent protective packaging · 30 months shelf life · size: diameter: 35 mm, height: 12 mm · suitable for shower		21146000	10.00
Optional parts: · Starter kit (1 case + 2 shower tabs)	Matt White	21140700	14.70

Wastes and overflow



Bath filler with waste and overflow for bath tubs page 460



Waste and overflow for bath tubs page 465



Waste for shower trays page 467



Waste for basin/ bidet page 468



Traps page 469



Accessories page 471



Bath filler with wastes and overflow for bath tubs

	finish	code no.	Euro
 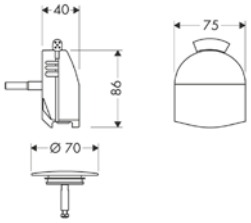			
Exafill Finish set bath filler, waste and overflow set · consists of: cover, security plug · TÜV certified · suitable for standard and special bath tubs · triple aerator · jet former can be adjusted by 20° · flow rate 38 l/ min	Chrome	58127000	170.80
Required parts:			
· **Exafill** Basic set bath filler, waste and overflow set for standard bath tubs		58125180	117.70
· **Exafill** Basic set bath filler, waste and overflow set for special bath tubs		58126180	165.00
Optional parts:			
· Flexible connection tube 80 cm		58192000	104.50
 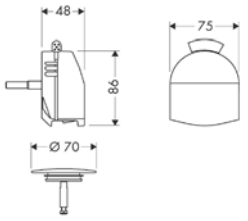			
Exafill Finish set bath filler, waste and overflow set plus · consists of: cover, security plug · TÜV certified · suitable for standard and special bath tubs, bath tubs with recessed overflow opening · triple aerator · jet former can be adjusted by 20° · flow rate 38 l/ min	Chrome	58128000	202.60
Required parts:			
· **Exafill** Basic set bath filler, waste and overflow set for standard bath tubs		58125180	117.70
· **Exafill** Basic set bath filler, waste and overflow set for special bath tubs		58126180	165.00
Optional parts:			
· Flexible connection tube 80 cm		58192000	104.50
 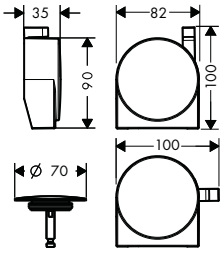			
Exafill S Finish set bath filler, waste and overflow set · consists of: cover, security plug · TÜV certified · suitable for standard and special bath tubs · wide flood jet · jet former can be adjusted by 30° · flow rate 19 l/ min	Chrome	58117000	156.90
	Brushed Bronze	58117140	235.40
	Brushed Black Chrome	58117340	235.40
	Matt Black	58117670	219.70
	Matt White	58117700	219.70
	Brushed Nickel	58117820	235.40
	Polished Gold Optic	58117990	235.40
			Quick Clean
Required parts:			
· **Exafill S** Basic set bath filler, waste and overflow set for standard bath tubs		58115180	108.10
· **Exafill S** Basic set bath filler, waste and overflow set for special bath tubs		58116180	151.60
Optional parts:			
· Flexible connection tube 80 cm		58192000	104.50

Measurements within scale drawings are in mm.

Technical specifications and units of measure are subject to change.

	finish	code no.	Euro
Exafill Finish set bath filler	Chrome	58112000	83.30
· flow rate 26 l/ min · overflow height adjustable by 25 mm			
Required parts:			
· Waste set push-open for bath tubs	Chrome	50107000	55.30
Optional parts:			
· Bath tub trap		56373000	12.40



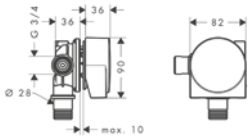



Exafill Basic set bath filler, waste and overflow set for standard bath tubs		58125180	117.70
· consists of: basic set, bath tub trap · suitable for standard bath tubs · bowden cable length 520 mm · supply hose water connection left and right DN20			
Consisting of:			
· Bath tub trap (# 56373000)			
Required parts:			
· **Exafill** Finish set bath filler, waste and overflow set	Chrome	58127000	170.80
· **Exafill** Finish set bath filler, waste and overflow set plus	Chrome	58128000	202.60
Optional parts:			
· Flexible connection tube 80 cm		58192000	104.50

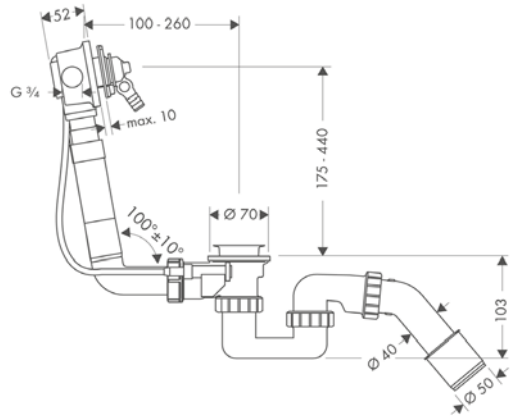



Exafill Basic set bath filler, waste and overflow set for special bath tubs		58126180	165.00
· consists of: basic set, bath tub trap · suitable for special bath tubs, with bellows for bath tubs with slanted bath rim · bowden cable length 780 mm · supply hose water connection left and right DN20			
Consisting of:			
· Bath tub trap (# 56373000)			
Required parts:			
· **Exafill** Finish set bath filler, waste and overflow set	Chrome	58127000	170.80
· **Exafill** Finish set bath filler, waste and overflow set plus	Chrome	58128000	202.60
Optional parts:			
· Flexible connection tube 80 cm		58192000	104.50

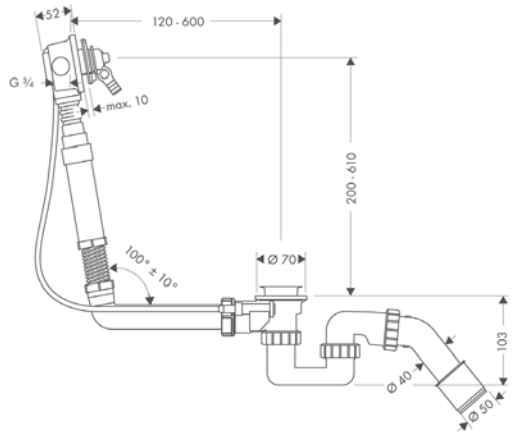

Measurements within scale drawings are in mm.

Technical specifications and units of measure are subject to change.

	finish	code no.	Euro
			
Exafill Complete set bath filler, waste and overflow set for standard bath tubs · consists of: bath tub trap, basic set, finish set · TÜV certified · suitable for standard bath tubs · bowden cable length 520 mm · supply hose water connection left and right DN20	Chrome	58123000	264.20
Consisting of: · **Exafill** Basic set bath filler, waste and overflow set for standard bath tubs (# 58125180) · **Exafill** Finish set bath filler, waste and overflow set (# 58127000) · Bath tub trap (# 56373000)			
Optional parts: · Flexible connection tube 80 cm		58192000	104.50
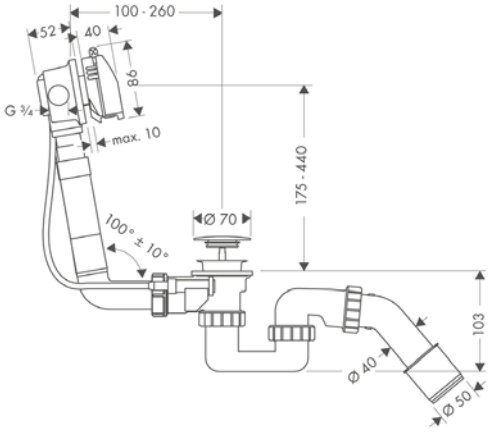			
			
Exafill S Basic set bath filler, waste and overflow set for standard bath tubs · consists of: basic set, bath tub trap · suitable for standard bath tubs, with bellows for bath tubs with slanted bath rim · bowden cable length 520 mm · supply hose water connection left DN20		58115180	108.10
Consisting of: · Bath tub trap (# 56373000)			
Alternative products: · **Exafill S** Basic set bath filler, waste and overflow set for special bath tubs		58116180	151.60
Required parts: · **Exafill S** Finish set bath filler, waste and overflow set	Chrome Brushed Bronze Brushed Black Chrome Matt Black Matt White Brushed Nickel Polished Gold Optic	58117000 58117140 58117340 58117670 58117700 58117820 58117990	156.90 235.40 235.40 219.70 219.70 235.40 235.40
Optional parts: · Flexible connection tube 80 cm		58192000	104.50
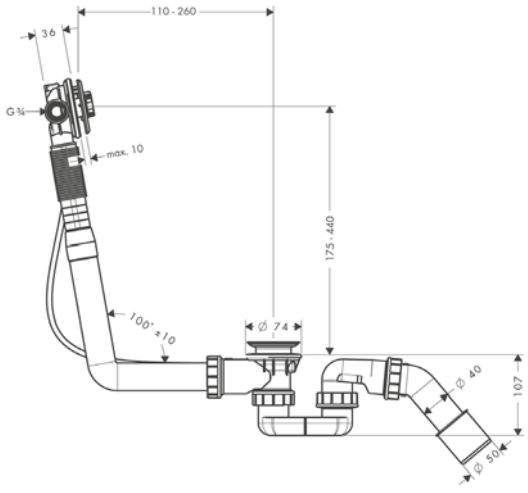			

Measurements within scale drawings are in mm.

Technical specifications and units of measure are subject to change.



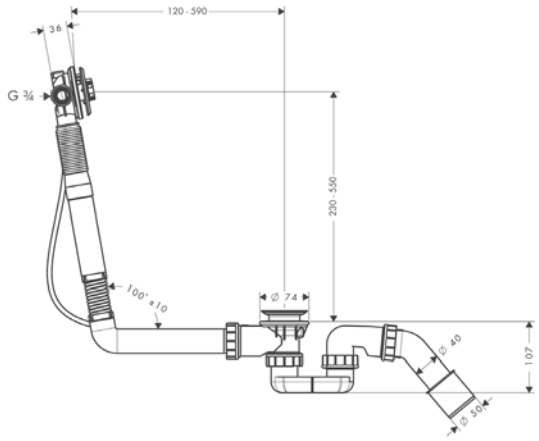

Exafill S Basic set bath filler, waste and overflow set for special bath tubs

- consists of: basic set, bath tub trap
- suitable for special bath tubs, with bellows for bath tubs with slanted bath rim
- bowden cable length 780 mm
- supply hose water connection left DN20

Consisting of:
- Bath tub trap (# 56373000)

	finish	code no.	Euro
Required parts:			
· **Exafill S** Finish set bath filler, waste and overflow set	Chrome	58117000	156.90
	Brushed Bronze	58117140	235.40
	Brushed Black Chrome	58117340	235.40
	Matt Black	58117670	219.70
	Matt White	58117700	219.70
	Brushed Nickel	58117820	235.40
	Polished Gold Optic	58117990	235.40
Optional parts:			
· Flexible connection tube 80 cm		58192000	104.50



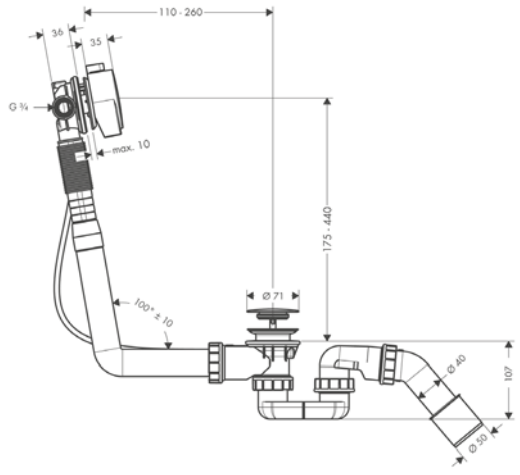

Exafill S Complete set bath filler, waste and overflow set for standard bath tubs

- consists of: bath tub trap, basic set, finish set
- TÜV certified
- suitable for standard bath tubs, with bellows for bath tubs with slanted bath rim
- bowden cable length 520 mm
- supply hose water connection left DN20

Consisting of:
- Bath tub trap (# 56373000)
- **Exafill S** Basic set bath filler, waste and overflow set for standard bath tubs (# 58115180)
- **Exafill S** Finish set bath filler, waste and overflow set (# 58117XXX)

	finish	code no.	Euro
	Chrome	58113000	237.80
Optional parts:			
· Flexible connection tube 80 cm		58192000	104.50





Flexible connection tube 80 cm

- length 800 mm
- version: 90° angle

		58192000	104.50

Measurements within scale drawings are in mm.

Technical specifications and units of measure are subject to change.



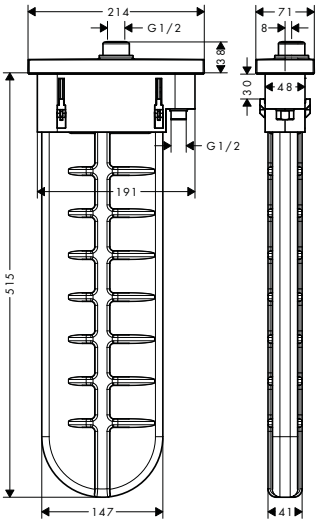

sBox Finish set square

- consists of: hose box, shower hose, escutcheon
- suitable for rim or tile mounted installation
- 1 function
- sBox for quiet, smooth and protected hose guidance
- flow rate at 3 bar: 9.5 l/min
- no additional maintenance opening required
- bath rim width at least 100 mm
- clamping range: 0 - 30 mm
- connection dimension: DN15
- maximum pull-out length of hand shower 1.45 m
- removable for service at any time
- protected against backflow for domestic use (according to DIN EN1717)

finish	code no.	Euro
Chrome	28010000	293.80
Brushed Bronze	28010140	440.70
Brushed Black Chrome	28010340	440.70
Matt Black	28010670	411.30
Matt White	28010700	411.30
Polished Gold Optic	28010990	440.70

Alternative products:

· **sBox** Finish set oval	Chrome	28020000	293.80

Required parts:

· **sBox** Rim and tile mounted bath basic set		13560180	50.00

Optional parts:

· **sBox** Installation plate for tile mounted installation		28016000	60.80
· **sBox** Mounting angle set for installation plate for tile mounted installation		28021000	152.00
· Rim mounted adapter 25°	Chrome	28071000	26.40



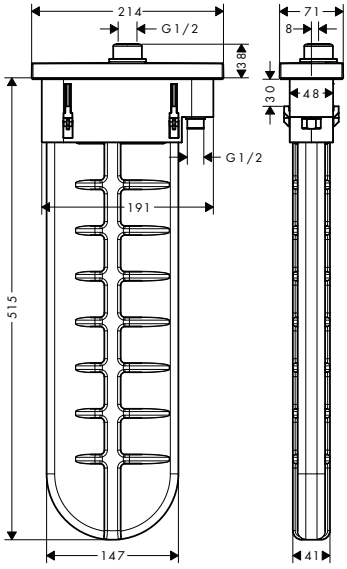

sBox Finish set oval

- consists of: hose box, shower hose, escutcheon
- suitable for rim or tile mounted installation
- 1 function
- sBox for quiet, smooth and protected hose guidance
- flow rate at 3 bar: 9.5 l/min
- no additional maintenance opening required
- bath rim width at least 100 mm
- clamping range: 0 - 30 mm
- connection dimension: DN15
- maximum pull-out length of hand shower 1.45 m
- removable for service at any time
- protected against backflow for domestic use (according to DIN EN1717)

finish	code no.	Euro
Chrome	28020000	293.80

Alternative products:

· **sBox** Finish set square	Chrome	28010000	293.80
	Brushed Bronze	28010140	440.70
	Brushed Black Chrome	28010340	440.70
	Matt Black	28010670	411.30
	Matt White	28010700	411.30
	Polished Gold Optic	28010990	440.70

Required parts:

· **sBox** Rim and tile mounted bath basic set		13560180	50.00

Optional parts:

· **sBox** Installation plate for tile mounted installation		28016000	60.80
· **sBox** Mounting angle set for installation plate for tile mounted installation		28021000	152.00
· Rim mounted adapter 25°	Chrome	28071000	26.40

Measurements within scale drawings are in mm.

Technical specifications and units of measure are subject to change.

	finish	code no.	Euro
sBox Rim and tile mounted bath basic set		13560180	50.00



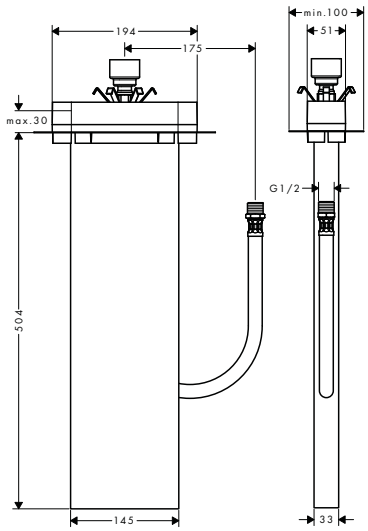

- suitable for rim or tile mounted installation
- 1 function
- connection thread
- G ½
- connection hose length: 600 mm
- bath rim width at least 100 mm
- drilling diameter on bath tub: two drilled holes Ø 50/51 mm and connection by sawing out required
- clamping range: 0 - 30 mm
- connection dimension: DN15

Optional parts:

· **sBox** Installation plate for tile mounted installation	28016000	60.80
· **sBox** Mounting angle set for installation plate for tile mounted installation	28021000	152.00

sBox Installation plate for tile mounted installation — 28016000 — 60.80



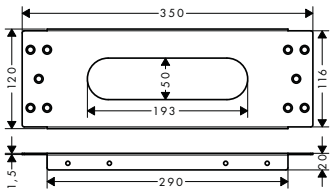

- dimension: 350 x 120 mm

sBox Mounting angle set for installation plate for tile mounted installation — 28021000 — 152.00



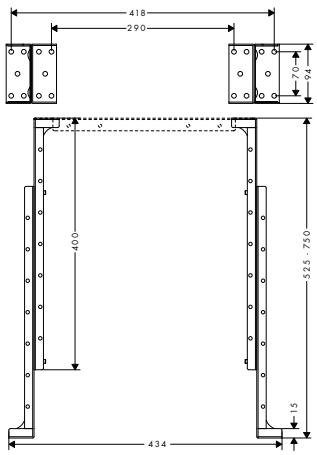

- minimum mounting height: 400 mm
- maximum mounting height: 750 mm
- packaging unit: 2 pieces

Wastes and overflow for bath tubs

Flexaplus Finish set waste and overflow set

Chrome	58185000	21.20
Brushed Bronze	58185140	31.80
Brushed Black	58185340	31.80
Chrome Matt Black	58185670	29.70
Matt White	58185700	29.70
Polished Gold Optic	58185990	31.80



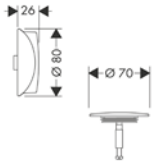

- consists of: turning handle, security plug
- suitable for standard and special bath tubs
- TÜV certified

Required parts:

· **Flexaplus** Basic set waste and overflow set for standard bath tubs	58140180	47.10
· **Flexaplus** Basic set waste and overflow set for special bath tubs	58141180	72.70

Measurements within scale drawings are in mm.

Technical specifications and units of measure are subject to change.

	finish	code no.	Euro
 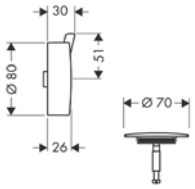			
Flexaplus S Finish set waste and overflow set · consists of: turning handle, security plug · suitable for standard and special bath tubs	Chrome Brushed Nickel	58186000 58186820	32.50 48.80
Required parts:			
· **Flexaplus** Basic set waste and overflow set for standard bath tubs		58140180	47.10
· **Flexaplus** Basic set waste and overflow set for special bath tubs		58141180	72.70
 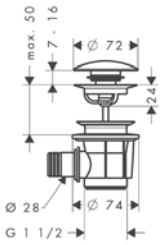			
Waste set push-open for bath tubs	Chrome	50107000	55.30
Required parts:			
· **Exafill** Finish set bath filler	Chrome	58112000	83.30
Optional parts:			
· Bath tub trap		56373000	12.40
 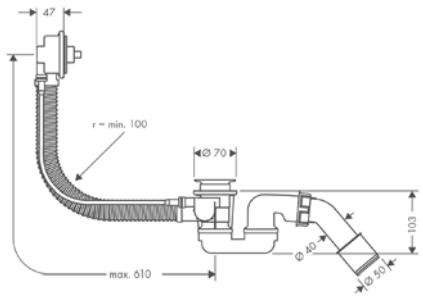			
Flexaplus Basic set waste and overflow set for standard bath tubs · suitable for standard bath tubs · PE screw connection G 1½ x 40/ 50 mm · flexible overflow hose · bowden cable length 520 mm		58140180	47.10
Required parts:			
· **Flexaplus** Finish set waste and overflow set	Chrome	58185000	21.20
	Brushed Bronze	58185140	31.80
	Brushed Black Chrome	58185340	31.80
	Matt Black	58185670	29.70
	Matt White	58185700	29.70
	Polished Gold Optic	58185990	31.80
· **Flexaplus S** Finish set waste and overflow set	Chrome	58186000	32.50
	Brushed Nickel	58186820	48.80
 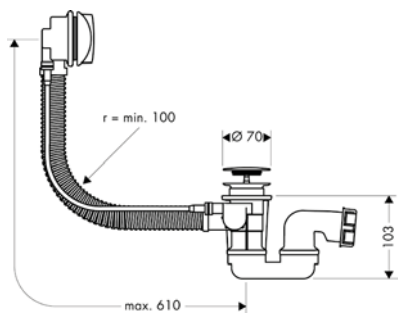			
Flexaplus Basic set waste and overflow set for standard bath tubs and shower trays · suitable for standard bath tubs · PE screw connection G 1½ x 40/ 50 mm · flexible overflow hose · bowden cable length 520 mm	Chrome	58142000	67.00

Measurements within scale drawings are in mm.

Technical specifications and units of measure are subject to change.

	finish	code no.	Euro
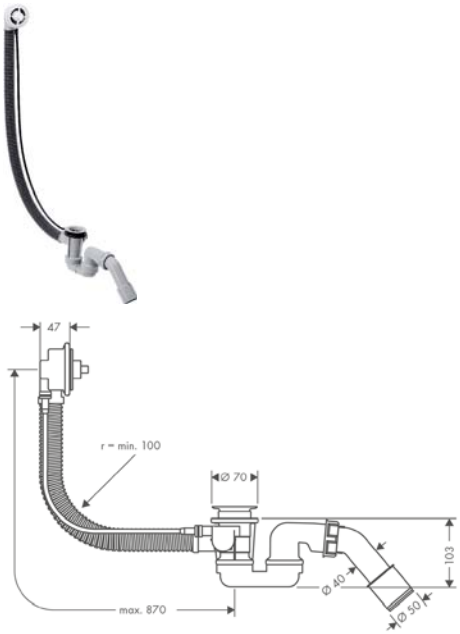			
Flexaplus Basic set waste and overflow set for special bath tubs · suitable for special bath tubs · PE screw connection G 1½ x 40/ 50 mm · flexible overflow hose · bowden cable length 780 mm		58141180	72.70
Required parts:			
· **Flexaplus** Finish set waste and overflow set	Chrome	58185000	21.20
	Brushed Bronze	58185140	31.80
	Brushed Black Chrome	58185340	31.80
	Matt Black	58185670	29.70
	Matt White	58185700	29.70
	Polished Gold Optic	58185990	31.80
· **Flexaplus S** Finish set waste and overflow set	Chrome	58186000	32.50
	Brushed Nickel	58186820	48.80
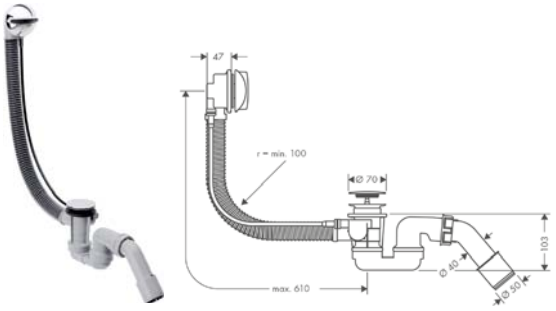			
Flexaplus Complete set waste and overflow set for standard bath tubs · consists of: basic set, finish set · TÜV certified · suitable for standard bath tubs · PE screw connection G 1½ x 40/ 50 mm · flexible overflow hose · bowden cable length 520 mm	Chrome	58143000	67.00
Consisting of: · **Flexaplus** Basic set waste and overflow set for standard bath tubs (# 58140180) · **Flexaplus** Finish set waste and overflow set (# 58185XXX)			
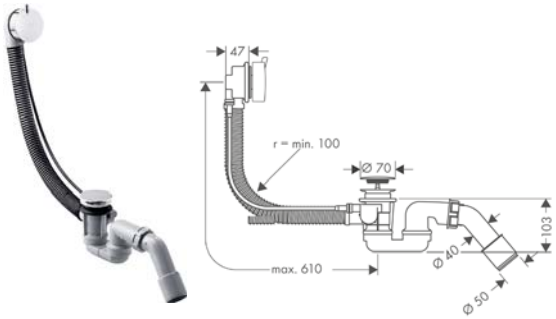			
Flexaplus S Complete set waste and overflow set for standard bath tubs · consists of: basic set, finish set · TÜV certified · suitable for standard bath tubs · PE screw connection G 1½ x 40/ 50 mm · flexible overflow hose · bowden cable length 520 mm	Chrome	58150000	79.00
Consisting of: · **Flexaplus** Basic set waste and overflow set for standard bath tubs (# 58140180) · **Flexaplus S** Finish set waste and overflow set (# 58186XXX)			

Wastes for shower trays



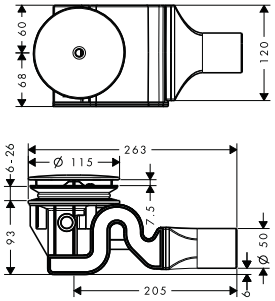

Raindrain Complete set waste set 90 XXL · suitable for shower trays with Ø 90 mm waste outlet · drain performance 51 l/ min at 15 mm water level · waste pipe Ø 50 mm · stainless steel finish set · opening for cleaning	Chrome	60067000	68.10

Measurements within scale drawings are in mm.

	finish	code no.	Euro
Staro Complete set waste set 90 · consists of: basic set, finish set · suitable for shower trays with Ø 90 mm waste outlet · drain performance 29 l/ min at 15 mm water level · PE screw connection 40/ 50 mm · waste pipe Ø 50 mm · stainless steel finish set · self-cleaning	Chrome	60056000	55.70
Staro Complete set waste set 52 · consists of: basic set, finish set · suitable for shower trays with Ø 52 mm waste outlet · drain performance 33 l/ min at 120 mm water level · PE screw connection 40/ 50 mm · waste pipe Ø 50 mm · stainless steel finish set · self-cleaning	Chrome	60060000	31.30
Bath tub trap · PE screw connection G 1½ x 40/ 50 mm		56373000	12.40

Wastes for basin/ bidet

Waste set pop-up for basin and bidet mixers · operation via pull-rod · for basins with overflow hole · brass · drain plug material brass · connection dimension G 1¼	Chrome	94139000	60.70
Waste set push-open for basin and bidet mixers · operation with pressure plug · for basins with overflow hole · brass · drain plug material brass · connection dimension G 1¼	Chrome Brushed Bronze Brushed Black Chrome Matt Black Matt White Polished Gold Optic	50100000 50100140 50100340 50100670 50100700 50100990	56.10 84.20 84.20 78.50 78.50 84.20
Waste set push-open for basin and bidet mixers · operation with pressure plug · for basins with overflow hole · glass fibre reinforced plastic · drain plug material stainless steel · connection dimension G 1¼	Chrome	50105000	23.90

Measurements within scale drawings are in mm.

Technical specifications and units of measure are subject to change.

	finish	code no.	Euro
Waste set non-closing for washbasins · non-closing valve · for washbasins without overflow · brass · drain plug material stainless steel · connection dimension G 1¼	Chrome	50001000	36.00



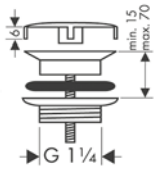

Traps



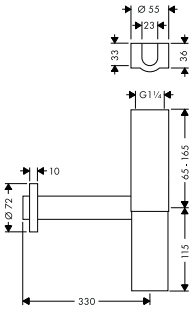

Design trap Flowstar · adjustment distance 65 - 165 mm · distance to wall 330 mm · connection dimension entry: G 1¼	Chrome	52100000	130.80



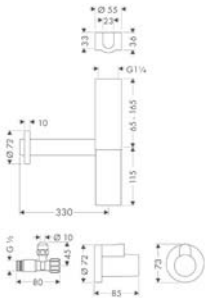

Design trap Flowstar set · consists of: design trap, angle valve, cover · adjustment distance 65 - 165 mm · distance to wall 330 mm · connection dimension entry: G 1¼ **Consisting of:** · Design trap Flowstar (# 52100000) · Angle valve with cover outlet G 3/8 (# 13954XXX) · Cover (# 13950XXX)	Chrome	52120000	187.30



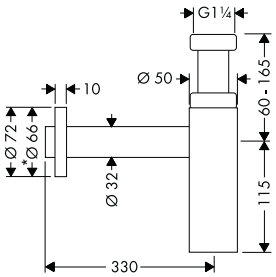

Design trap Flowstar S · adjustment distance 60 - 165 mm · distance to wall 330 mm · connection dimension entry: G 1¼ · connection dimension outlet DN32	Chrome	52105000	73.40
	Brushed Bronze	52105140	110.10
	Brushed Black	52105340	110.10
	Chrome Matt Black	52105670	102.80
	Matt White	52105700	102.80
	Polished Gold Optic	52105990	110.10



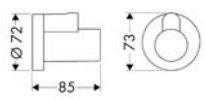

Cover · for angle valve · packaging unit: 1 piece	Chrome	13950000	31.10
	Brushed Bronze	13950140	46.70
	Matt Black	13950670	43.50
	Matt White	13950700	43.50
	Polished Gold Optic	13950990	46.70



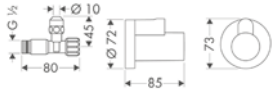

Angle valve with cover outlet G 3/8 · self-sealing connection thread · connection dimension entry: G ½ · connection dimension outlet G ⅜ · packaging unit: 1 piece	Chrome	13954000	50.40
	Brushed Nickel	13954820	75.60

Measurements within scale drawings are in mm.

Technical specifications and units of measure are subject to change.

		finish	code no.	Euro
	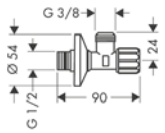	Chrome	13904000	28.10

Angle valve with microfilter outlet G 3/8

- for protection of mixers against dirt inlet, e.g. for electronic basin mixers
- filter element can be removed and cleaned
- connection dimension entry: G ½
- connection dimension outlet G ⅜
- packaging unit: 1 piece

	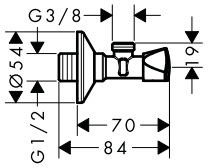	Chrome	13902000	13.30

Angle valve E outlet G 3/8

- connection dimension entry: G ½
- connection dimension outlet G ⅜
- main material: brass
- material handle and escutcheon: plastic
- packaging unit: 1 piece

	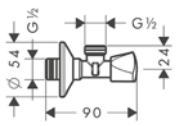	Chrome	13903000	14.60

Angle valve E outlet G 1/2

- connection dimension entry: G ½
- connection dimension outlet G ½
- main material: brass
- material handle and escutcheon: plastic
- packaging unit: 1 piece

	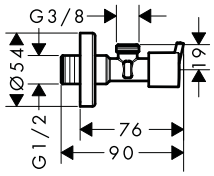	Chrome	13901000	15.50

Angle valve S outlet G 3/8

- connection dimension entry: G ½
- connection dimension outlet G ⅜
- main material: brass
- material handle and escutcheon: plastic
- packaging unit: 1 piece

	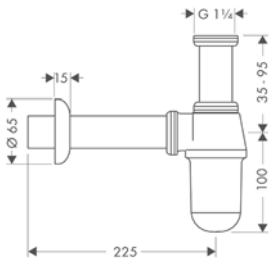	Chrome	52053000	23.50

Cup-shaped trap standard model

- adjustment distance 35 - 95 mm
- distance to wall 225 mm
- connection dimension entry: G 1¼

	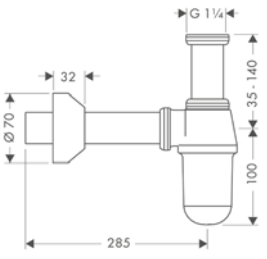	Chrome	52010000	33.00

Cup-shaped trap easy to install

- adjustment distance 35 - 140 mm
- distance to wall 285 mm
- connection dimension entry: G 1¼

Measurements within scale drawings are in mm.

Technical specifications and units of measure are subject to change.

	finish	code no.	Euro
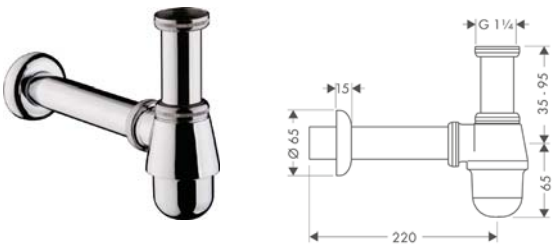 **Cup-shaped trap standard model for bidet** · adjustment distance 35 - 95 mm · distance to wall 220 mm · connection dimension entry: G 1¼	Chrome	55213000	30.70
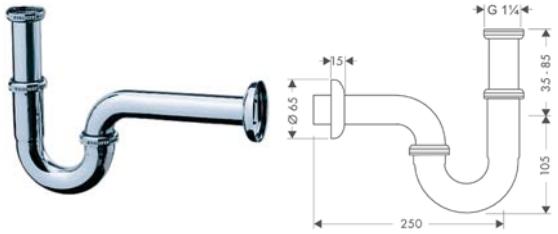 **Pipe trap standard model** · adjustment distance 35 - 85 mm · distance to wall 250 mm · connection dimension entry: G 1¼	Chrome	53002000	18.20
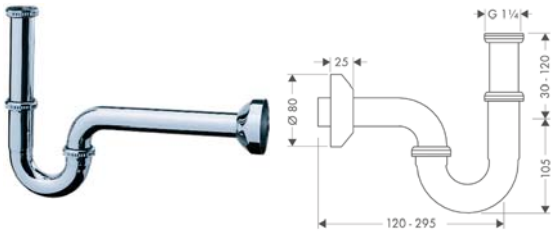 **Pipe trap easy to install** · adjustment distance 30 - 120 mm · distance to wall 300 mm · connection dimension entry: G 1¼	Chrome	53010000	23.80
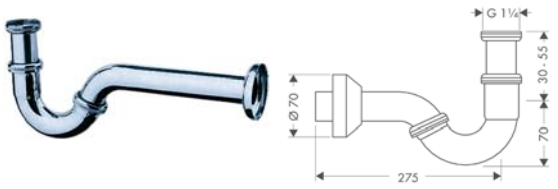 **Pipe trap standard model for bidet** · adjustment distance 30 - 55 mm · distance to wall 275 mm · connection dimension entry: G 1¼	Chrome	55237000	24.20

Accessories

 **Curved pipe 30 cm** · length 300 mm · with edge · material: brass · connection dimension G 1¼	Chrome	53555000	22.60
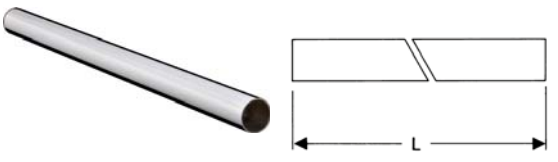 **Straight pipe 50 cm** · length 500 mm · without edge · material: brass · connection dimension G 1¼	Chrome **NEW** Matt Black **NEW** Matt White	53493000 53493670 53493700	22.10 30.90 30.90

Measurements within scale drawings are in mm.

Technical specifications and units of measure are subject to change.

	finish	code no.	Euro
Straight pipe 30 cm · length 300 mm · with edge · material: brass · connection dimension G 1¼	Chrome	53428000	12.40



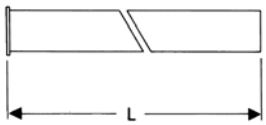

	finish	code no.	Euro
Angle pipe 90° · without edge · material: brass · connection dimension G 1¼	Chrome	53646000	48.10



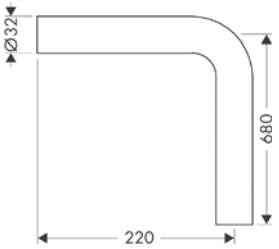

	finish	code no.	Euro
Extension pipe 12.5 cm · length 125 mm · material: brass · connection dimension G 1¼	Chrome	53990000	21.10





	finish	code no.	Euro
Wall flange · material: brass · connection dimension DN15 · packaging unit: 100 pieces	Chrome	06010000	2.40



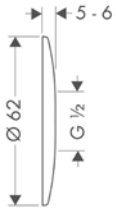

Measurements within scale drawings are in mm.

Technical specifications and units of measure are subject to change.

Kitchen mixers and sinks



Stainless-steel sinks	page 474		SilicaTec sinks	page 488	
Aquno Select M81	page 500		Metris Select M71	page 501	
Metris M71	page 508		Talis Select M51	page 511	
Talis M51	page 515		Talis M52	page 518	
Talis M54	page 521		Focus M41	page 526	
Focus M42	page 528		Logis M31	page 532	
Logis M32	page 534		Sink combis	page 536	

hansgrohe Stainless steel sinks

Stainless steel sinks at a glance

	sink cabinet	45 cm	50 cm
	S71		
Versions	Standard with tap hole		
	Standard with 2 tap holes		
Installation options	Surface-mounted installation		
	Flush-mounted installation		
	Under-mounted installation		

	S71		
Versions	Standard		43425, -800
Installation options	Surface-mounted installation		
	Flush-mounted installation		
	Under-mounted installation		■

	S41				
Versions	Standard		43340, -800		43341, -800
	Standard with 2 tap holes	43334, -800	43337, -800	43335, -800	43338, -800
Installation options	Surface-mounted installation	■	■	■	■
	Flush-mounted installation	■	■	■	■
	Under-mounted installation				

60 cm		80 cm		90 cm
				
43301, -800	43306, -800 43331, -800	43302, -800	43309, -800	43303, -800
43305, -800	43307, -800 43332, -800	43308, -800	43310, -800	43311, -800
■	■	■	■	■
■	■	■	■	■

				
43426, -800	43427, -800	43428, -800	43429, -800	43430, -800
■	■	■	■	■

				
	43342, -800			
43336, -800	43339, -800			
■	■			
■	■			

Stainless steel built-in sinks

	finish	code no.	Euro
S711-F450 Built-in sink 450	Stainless Steel	43301800	611.10



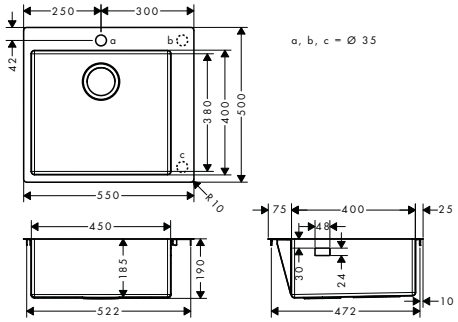

- cut-out dimensions: 530 x 480 mm
- material: stainless steel
- number of bowls: 1 main bowl
- predrilled tap hole
- sink depth: 190 mm
- cabinet size: 60 cm
- type of installation: flat on the countertop (self-rimming) or flush-mount installation
- position overflow: on the right side of the bowl
- tap ledge reinforcing for a tight and stable seating of the kitchen mixer
- corner radius: 10 mm
- waste set not included - please order one waste set from the required parts

Required parts:

· D14-10 Manual waste and overflow set for single bowl	Stainless Steel	43921800	25.00

Optional parts:

· F15 Cutting board walnut		40960000	124.50
· F16 Cutting board oak		40961000	93.40
· F17 Mobile drainboard	Stainless Steel	40962800	81.00
· F14 Multifunctional strainer	Matt Black	40963000	20.30

S712-F450 Built-in sink 450	Stainless Steel	43305800	611.10



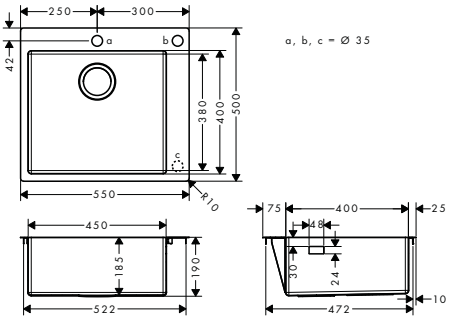

- cut-out dimensions: 530 x 480 mm
- material: stainless steel
- number of bowls: 1 main bowl
- tap hole and hole for pop-up waste control are pre-drilled
- sink depth: 190 mm
- cabinet size: 60 cm
- type of installation: flat on the countertop (self-rimming) or flush-mount installation
- position overflow: on the right side of the bowl
- tap ledge reinforcing for a tight and stable seating of the kitchen mixer
- corner radius: 10 mm
- waste set not included - please order one waste set from the required parts

Required parts:

· D14-11 Automatic waste and overflow set for single bowl	Stainless Steel	43931800	43.80

Optional parts:

· F15 Cutting board walnut		40960000	124.50
· F16 Cutting board oak		40961000	93.40
· F17 Mobile drainboard	Stainless Steel	40962800	81.00
· F14 Multifunctional strainer	Matt Black	40963000	20.30

Measurements within scale drawings are in mm.

Technical specifications and units of measure are subject to change.

	finish	code no.	Euro



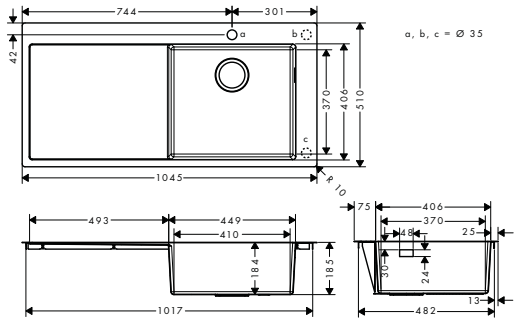

S715-F450 Built-in sink 450 with drainboard left

Stainless Steel | 43306800 | 870.40

- cut-out dimensions: 1025 x 490 mm
- for installation in worktops from 25 mm
- material: stainless steel
- number of bowls: 1 main bowl
- with drainage
- predrilled tap hole
- orientation: bowl right
- sink depth: 190 mm
- cabinet size: 60 cm
- type of installation: flat on the countertop (self-rimming) or flush-mount installation
- position overflow: on the right side of the bowl
- tap ledge reinforcing for a tight and stable seating of the kitchen mixer
- corner radius: 10 mm
- waste set not included - please order one waste set from the required parts

Required parts:

- D14-10 Manual waste and overflow set for single bowl — Stainless Steel | 43921800 | 25.00

Optional parts:

- F14 Multifunctional strainer — Matt Black | 40963000 | 20.30



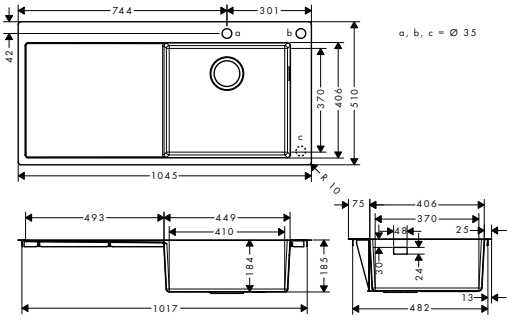

S717-F450 Built-in sink 450 with drainboard left

Stainless Steel | 43307800 | 870.40

- cut-out dimensions: 1025 x 490 mm
- for installation in worktops from 25 mm
- material: stainless steel
- number of bowls: 1 main bowl
- with drainage
- tap hole and hole for pop-up waste control are pre-drilled
- orientation: bowl right
- sink depth: 190 mm
- cabinet size: 60 cm
- type of installation: flat on the countertop (self-rimming) or flush-mount installation
- position overflow: on the right side of the bowl
- tap ledge reinforcing for a tight and stable seating of the kitchen mixer
- corner radius: 10 mm
- waste set not included - please order one waste set from the required parts

Required parts:

- D14-11 Automatic waste and overflow set for single bowl — Stainless Steel | 43931800 | 43.80

Optional parts:

- F14 Multifunctional strainer — Matt Black | 40963000 | 20.30

Measurements within scale drawings are in mm.

Technical specifications and units of measure are subject to change.

	finish	code no.	Euro



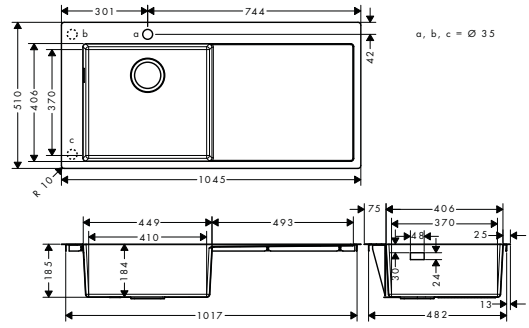

S716-F450 Built-in sink 450 with drainboard right

Stainless Steel | 43331800 | 870.40

- cut-out dimensions: 1025 x 490 mm
- for installation in worktops from 25 mm
- material: stainless steel
- number of bowls: 1 main bowl
- with drainage
- predrilled tap hole
- orientation: bowl left
- sink depth: 190 mm
- cabinet size: 60 cm
- type of installation: flat on the countertop (self-rimming) or flush-mount installation
- position overflow: on the left side of the bowl
- tap ledge reinforcing for a tight and stable seating of the kitchen mixer
- corner radius: 10 mm
- waste set not included - please order one waste set from the required parts

Required parts:

- D14-10 Manual waste and overflow set for single bowl — Stainless Steel | 43921800 | 25.00

Optional parts:

- F14 Multifunctional strainer — Matt Black | 40963000 | 20.30



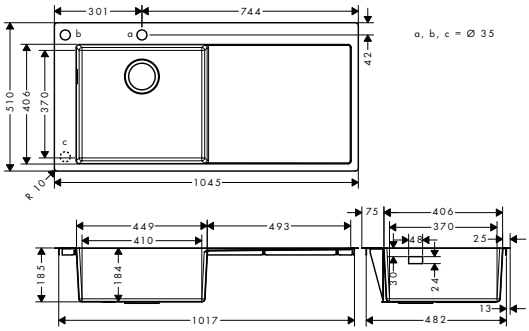

S718-F450 Built-in sink 450 with drainboard right

Stainless Steel | 43332800 | 870.40

- cut-out dimensions: 1025 x 490 mm
- for installation in worktops from 25 mm
- material: stainless steel
- number of bowls: 1 main bowl
- with drainage
- tap hole and hole for pop-up waste control are pre-drilled
- orientation: bowl left
- sink depth: 190 mm
- cabinet size: 60 cm
- type of installation: flat on the countertop (self-rimming) or flush-mount installation
- position overflow: on the left side of the bowl
- tap ledge reinforcing for a tight and stable seating of the kitchen mixer
- corner radius: 10 mm
- waste set not included - please order one waste set from the required parts

Required parts:

- D14-11 Automatic waste and overflow set for single bowl — Stainless Steel | 43931800 | 43.80

Optional parts:

- F14 Multifunctional strainer — Matt Black | 40963000 | 20.30

Measurements within scale drawings are in mm.

Technical specifications and units of measure are subject to change.

	finish	code no.	Euro



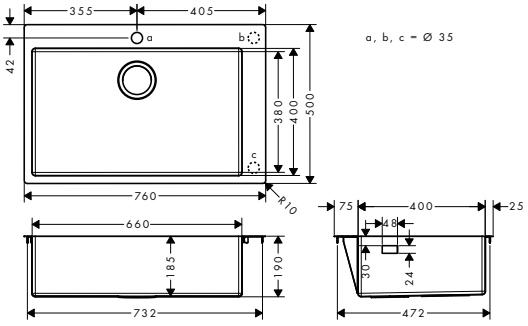

S711-F660 Built-in sink 660

Stainless Steel | 43302800 | 663.90

- cut-out dimensions: 740 x 480 mm
- material: stainless steel
- number of bowls: 1 main bowl
- predrilled tap hole
- sink depth: 190 mm
- cabinet size: 80 cm
- type of installation: flat on the countertop (self-rimming) or flush-mount installation
- position overflow: on the right side of the bowl
- tap ledge reinforcing for a tight and stable seating of the kitchen mixer
- corner radius: 10 mm
- waste set not included - please order one waste set from the required parts

Required parts:

· D14-10 Manual waste and overflow set for single bowl	Stainless Steel	43921800	25.00

Optional parts:

· F15 Cutting board walnut		40960000	124.50
· F16 Cutting board oak		40961000	93.40
· F17 Mobile drainboard	Stainless Steel	40962800	81.00
· F14 Multifunctional strainer	Matt Black	40963000	20.30



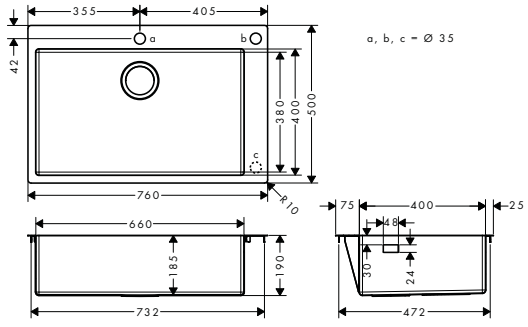

S712-F660 Built-in sink 660

Stainless Steel | 43308800 | 663.90

- cut-out dimensions: 740 x 480 mm
- material: stainless steel
- number of bowls: 1 main bowl
- tap hole and hole for pop-up waste control are pre-drilled
- sink depth: 190 mm
- cabinet size: 80 cm
- type of installation: flat on the countertop (self-rimming) or flush-mount installation
- position overflow: on the right side of the bowl
- tap ledge reinforcing for a tight and stable seating of the kitchen mixer
- corner radius: 10 mm
- waste set not included - please order one waste set from the required parts

Required parts:

· D14-11 Automatic waste and overflow set for single bowl	Stainless Steel	43931800	43.80

Optional parts:

· F15 Cutting board walnut		40960000	124.50
· F16 Cutting board oak		40961000	93.40
· F17 Mobile drainboard	Stainless Steel	40962800	81.00
· F14 Multifunctional strainer	Matt Black	40963000	20.30

Measurements within scale drawings are in mm.

Technical specifications and units of measure are subject to change.

	finish	code no.	Euro
S711-F655 Built-in sink 180/450	Stainless Steel	43309800	1,032.60



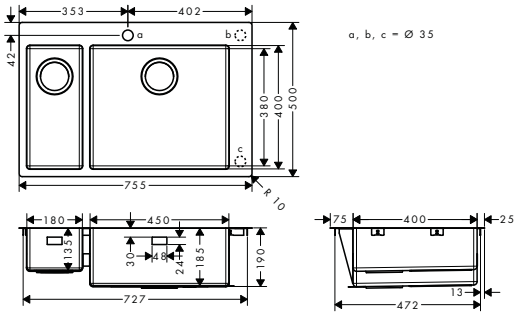

- cut-out dimensions: 735 x 480 mm
- material: stainless steel
- number of bowls: 1 main bowl and 1 additional bowl
- predrilled tap hole
- sink depth: 190 mm
- depth half sink: 135 mm
- cabinet size: 80 cm
- type of installation: flat on the countertop (self-rimming) or flush-mount installation
- position overflow: on the right side of the main bowl
- tap ledge reinforcing for a tight and stable seating of the kitchen mixer
- corner radius: 10 mm
- waste set not included - please order one waste set from the required parts

Required parts:

· D15-10 Manual waste and overflow set for double bowl	Stainless Steel	43922800	41.70

Optional parts:

· F15 Cutting board walnut		40960000	124.50
· F16 Cutting board oak		40961000	93.40
· F17 Mobile drainboard	Stainless Steel	40962800	81.00
· F14 Multifunctional strainer	Matt Black	40963000	20.30

S712-F655 Built-in sink 180/450	Stainless Steel	43310800	1,032.60



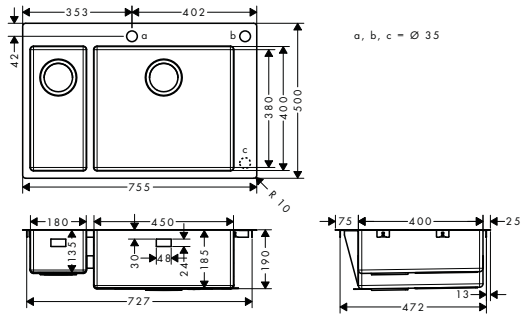

- cut-out dimensions: 735 x 480 mm
- material: stainless steel
- number of bowls: 1 main bowl and 1 additional bowl
- tap hole and hole for pop-up waste control are pre-drilled
- sink depth: 190 mm
- depth half sink: 135 mm
- cabinet size: 80 cm
- type of installation: flat on the countertop (self-rimming) or flush-mount installation
- position overflow: on the right side of the main bowl
- tap ledge reinforcing for a tight and stable seating of the kitchen mixer
- corner radius: 10 mm
- waste set not included - please order one waste set from the required parts

Required parts:

· D15-11 Automatic waste and overflow set for double bowl	Stainless Steel	43932800	67.80

Optional parts:

· F15 Cutting board walnut		40960000	124.50
· F16 Cutting board oak		40961000	93.40
· F17 Mobile drainboard	Stainless Steel	40962800	81.00
· F14 Multifunctional strainer	Matt Black	40963000	20.30

Measurements within scale drawings are in mm.

Technical specifications and units of measure are subject to change.

	finish	code no.	Euro
S711-F765 Built-in sink 370/370	Stainless Steel	43303800	1,138.00



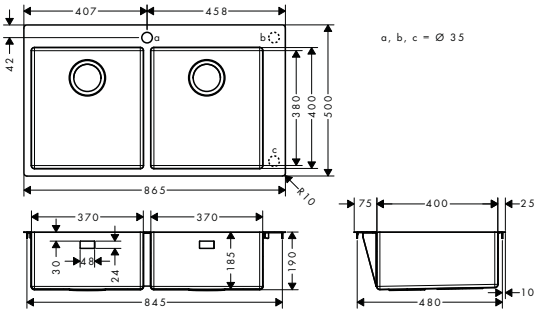

- cut-out dimensions: 845 x 480 mm
- material: stainless steel
- number of bowls: 2 main bowls
- predrilled tap hole
- sink depth: 190 mm
- cabinet size: 90 cm
- type of installation: flat on the countertop (self-rimming) or flush-mount installation
- tap ledge reinforcing for a tight and stable seating of the kitchen mixer
- corner radius: 10 mm
- waste set not included - please order one waste set from the required parts

Required parts:

· D15-10 Manual waste and overflow set for double bowl	Stainless Steel	43922800	41.70

Optional parts:

· F15 Cutting board walnut		40960000	124.50
· F16 Cutting board oak		40961000	93.40
· F17 Mobile drainboard	Stainless Steel	40962800	81.00
· F14 Multifunctional strainer	Matt Black	40963000	20.30

S712-F765 Built-in sink 370/370	Stainless Steel	43311800	1,138.00



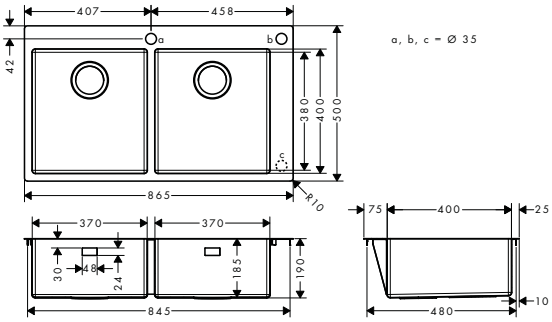

- cut-out dimensions: 845 x 480 mm
- material: stainless steel
- number of bowls: 2 main bowls
- tap hole and hole for pop-up waste control are pre-drilled
- sink depth: 190 mm
- cabinet size: 90 cm
- type of installation: flat on the countertop (self-rimming) or flush-mount installation
- tap ledge reinforcing for a tight and stable seating of the kitchen mixer
- corner radius: 10 mm
- waste set not included - please order one waste set from the required parts

Required parts:

· D15-11 Automatic waste and overflow set for double bowl	Stainless Steel	43932800	67.80

Optional parts:

· F15 Cutting board walnut		40960000	124.50
· F16 Cutting board oak		40961000	93.40
· F17 Mobile drainboard	Stainless Steel	40962800	81.00
· F14 Multifunctional strainer	Matt Black	40963000	20.30

Measurements within scale drawings are in mm.

Technical specifications and units of measure are subject to change.

Stainless steel undermount sinks

	finish	code no.	Euro
S719-U400 Under-mount sink 400	Stainless Steel	43425800	421.50



- cut-out dimensions: 398 x 398 mm
- material: stainless steel
- number of bowls: 1 main bowl
- sink depth: 190 mm
- cabinet size: 50 cm
- type of installation: undermount, flat on the countertop (self-rimming) or flush-mount installation
- position overflow: on the right side of the bowl
- corner radius: 10 mm
- waste set not included - please order one waste set from the required parts

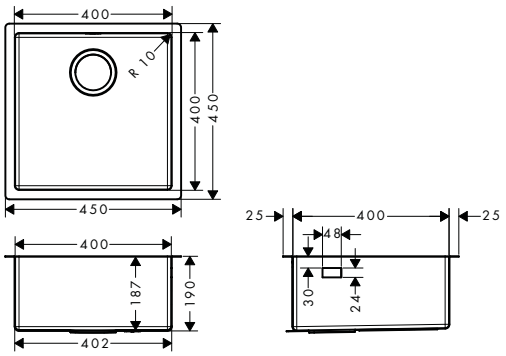

Required parts (choose one)

· D14-10 Manual waste and overflow set for single bowl	Stainless Steel	43921800	25.00
· D14-11 Automatic waste and overflow set for single bowl	Stainless Steel	43931800	43.80
· D14-12 Automatic waste and overflow set for single bowl Select	Stainless Steel	43941800	30.20

Optional parts:

· F15 Cutting board walnut		40960000	124.50
· F16 Cutting board oak		40961000	93.40
· F17 Mobile drainboard	Stainless Steel	40962800	81.00
· F14 Multifunctional strainer	Matt Black	40963000	20.30

S719-U450 Under-mount sink 450	Stainless Steel	43426800	453.10



- cut-out dimensions: 448 x 398 mm
- material: stainless steel
- number of bowls: 1 main bowl
- sink depth: 190 mm
- cabinet size: 60 cm
- type of installation: undermount, flat on the countertop (self-rimming) or flush-mount installation
- position overflow: on the right side of the bowl
- corner radius: 10 mm
- waste set not included - please order one waste set from the required parts

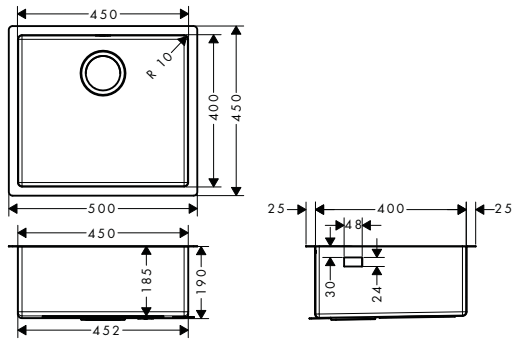

Required parts (choose one)

· D14-10 Manual waste and overflow set for single bowl	Stainless Steel	43921800	25.00
· D14-11 Automatic waste and overflow set for single bowl	Stainless Steel	43931800	43.80
· D14-12 Automatic waste and overflow set for single bowl Select	Stainless Steel	43941800	30.20

Optional parts:

· F15 Cutting board walnut		40960000	124.50
· F16 Cutting board oak		40961000	93.40
· F17 Mobile drainboard	Stainless Steel	40962800	81.00
· F14 Multifunctional strainer	Matt Black	40963000	20.30

Measurements within scale drawings are in mm.

Technical specifications and units of measure are subject to change.

	finish	code no.	Euro



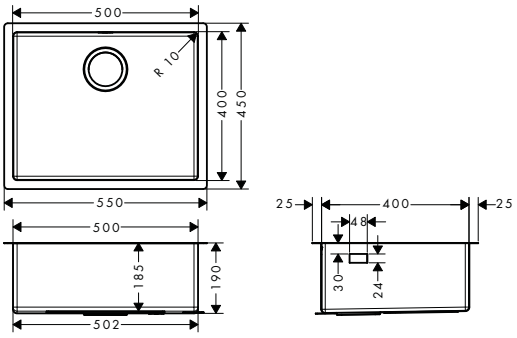

S719-U500 Under-mount sink 500

Stainless Steel | 43427800 | 474.20

- cut-out dimensions: 498 x 398 mm
- please note, when installing in a 60 cm sink cabinet the side panel must be cut out
- material: stainless steel
- number of bowls: 1 main bowl
- sink depth: 190 mm
- cabinet size: 60 cm
- type of installation: undermount, flat on the countertop (self-rimming) or flush-mount installation
- position overflow: on the right side of the bowl
- corner radius: 10 mm
- waste set not included - please order one waste set from the required parts

Required parts (choose one)

· D14-10 Manual waste and overflow set for single bowl	Stainless Steel	43921800	25.00
· D14-11 Automatic waste and overflow set for single bowl	Stainless Steel	43931800	43.80
· D14-12 Automatic waste and overflow set for single bowl Select	Stainless Steel	43941800	30.20

Optional parts:

· F15 Cutting board walnut		40960000	124.50
· F16 Cutting board oak		40961000	93.40
· F17 Mobile drainboard	Stainless Steel	40962800	81.00
· F14 Multifunctional strainer	Matt Black	40963000	20.30



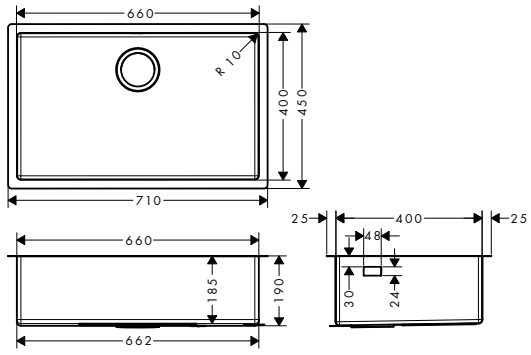

S719-U660 Under-mount sink 660

Stainless Steel | 43428800 | 495.20

- cut-out dimensions: 658 x 398 mm
- material: stainless steel
- number of bowls: 1 main bowl
- sink depth: 190 mm
- cabinet size: 80 cm
- type of installation: undermount, flat on the countertop (self-rimming) or flush-mount installation
- position overflow: on the right side of the bowl
- corner radius: 10 mm
- waste set not included - please order one waste set from the required parts

Required parts (choose one)

· D14-10 Manual waste and overflow set for single bowl	Stainless Steel	43921800	25.00
· D14-11 Automatic waste and overflow set for single bowl	Stainless Steel	43931800	43.80
· D14-12 Automatic waste and overflow set for single bowl Select	Stainless Steel	43941800	30.20

Optional parts:

· F15 Cutting board walnut		40960000	124.50
· F16 Cutting board oak		40961000	93.40
· F17 Mobile drainboard	Stainless Steel	40962800	81.00
· F14 Multifunctional strainer	Matt Black	40963000	20.30

Measurements within scale drawings are in mm.

Technical specifications and units of measure are subject to change.

	finish	code no.	Euro
S719-U655 Under-mount sink 180/450	Stainless Steel	43429800	832.40



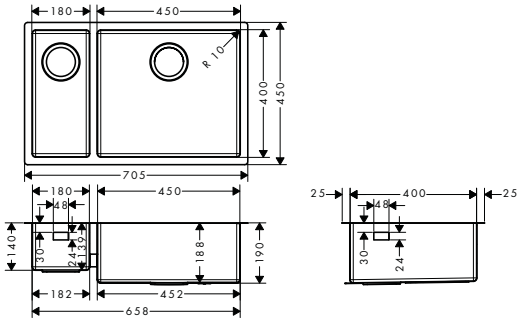

- cut-out dimensions: 653 x 398 mm
- material: stainless steel
- number of bowls: 1 main bowl and 1 additional bowl
- sink depth: 190 mm
- depth half sink: 135 mm
- cabinet size: 80 cm
- type of installation: undermount, flat on the countertop (self-rimming) or flush-mount installation
- position overflow: on the right side of the main bowl
- corner radius: 10 mm
- waste set not included - please order one waste set from the required parts

Required parts (choose one)

· D15-10 Manual waste and overflow set for double bowl	Stainless Steel	43922800	41.70
· D15-11 Automatic waste and overflow set for double bowl	Stainless Steel	43932800	67.80
· D15-12 Automatic waste and overflow set for double bowl Select	Stainless Steel	43942800	47.90

Optional parts:

· F15 Cutting board walnut		40960000	124.50
· F16 Cutting board oak		40961000	93.40
· F17 Mobile drainboard	Stainless Steel	40962800	81.00
· F14 Multifunctional strainer	Matt Black	40963000	20.30

S719-U765 Under-mount sink 370/370	Stainless Steel	43430800	906.10



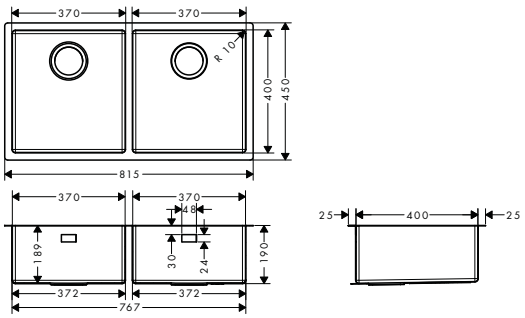

- cut-out dimensions: 763 x 398 mm
- material: stainless steel
- number of bowls: 2 main bowls
- sink depth: 190 mm
- cabinet size: 90 cm
- type of installation: undermount, flat on the countertop (self-rimming) or flush-mount installation
- corner radius: 10 mm
- waste set not included - please order one waste set from the required parts

Required parts (choose one)

· D15-10 Manual waste and overflow set for double bowl	Stainless Steel	43922800	41.70
· D15-11 Automatic waste and overflow set for double bowl	Stainless Steel	43932800	67.80
· D15-12 Automatic waste and overflow set for double bowl Select	Stainless Steel	43942800	47.90

Optional parts:

· F15 Cutting board walnut		40960000	124.50
· F16 Cutting board oak		40961000	93.40
· F14 Multifunctional strainer	Matt Black	40963000	20.30
· F17 Mobile drainboard	Stainless Steel	40962800	81.00

Measurements within scale drawings are in mm.

Technical specifications and units of measure are subject to change.

S41 stainless steel built-in sinks

	finish	code no.	Euro



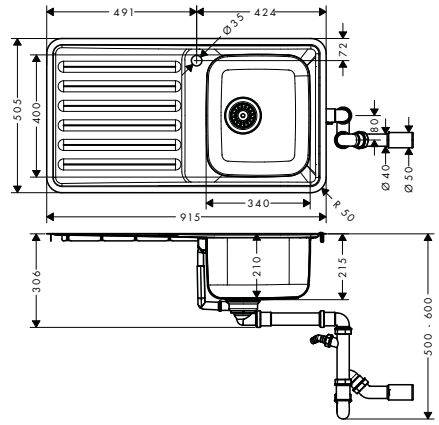

S4111-F340 Built-in sink 340/400 with drainboard

Stainless Steel | 43340800 | 320.00

- cut-out dimensions: 895 x 485 mm
- Manual waste set included
- material: stainless steel
- number of bowls: 1 main bowl
- with drainage
- tap hole for drilling is predefined (see scale drawing)
- orientation: reversible
- sink depth: 210 mm
- cabinet size: 45 cm
- type of installation: flat on the countertop (self-rimming) or flush-mount installation
- position overflow: on the side of the bowl under drainboard
- tap ledge reinforcing for a tight and stable seating of the kitchen mixer
- corner radius: 70 mm



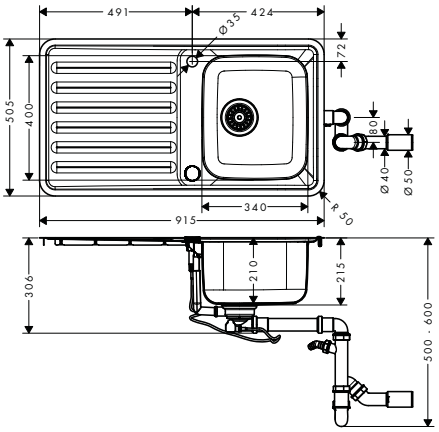

S4113-F340 Built-in sink 340/400 with drainboard

Stainless Steel | 43337800 | 340.00

- cut-out dimensions: 895 x 485 mm
- Automatic waste set included
- material: stainless steel
- number of bowls: 1 main bowl
- with drainage
- tap hole and hole for pop-up waste control are pre-drilled
- orientation: reversible
- sink depth: 210 mm
- cabinet size: 45 cm
- type of installation: flat on the countertop (self-rimming) or flush-mount installation
- position overflow: on the side of the bowl under drainboard
- tap ledge reinforcing for a tight and stable seating of the kitchen mixer
- corner radius: 70 mm



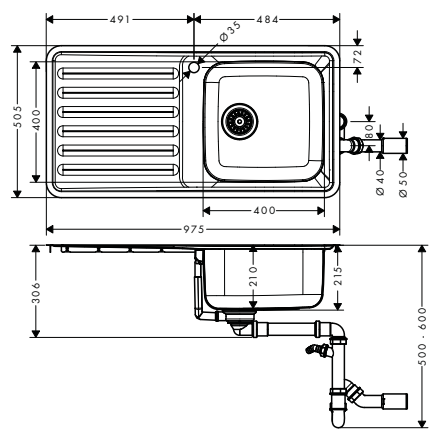

S4111-F400 Built-in sink 400/400 with drainboard

Stainless Steel | 43341800 | 340.00

- cut-out dimensions: 955 x 485 mm
- Manual waste set included
- material: stainless steel
- number of bowls: 1 main bowl
- with drainage
- tap hole for drilling is predefined (see scale drawing)
- orientation: reversible
- sink depth: 210 mm
- cabinet size: 50 cm
- type of installation: flat on the countertop (self-rimming) or flush-mount installation
- position overflow: on the side of the bowl under drainboard
- tap ledge reinforcing for a tight and stable seating of the kitchen mixer
- corner radius: 70 mm

Measurements within scale drawings are in mm.

Technical specifications and units of measure are subject to change.

	finish	code no.	Euro



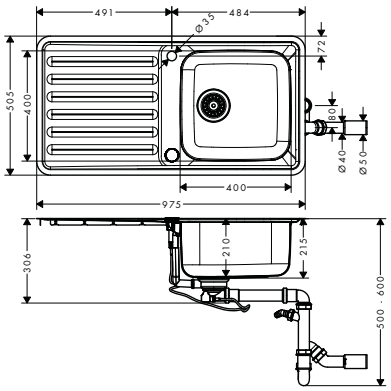

S4113-F400 Built-in sink 400/400 with drainboard

Stainless Steel | 43338800 | 360.00

- cut-out dimensions: 955 x 485 mm
- Automatic waste set included
- material: stainless steel
- number of bowls: 1 main bowl
- with drainage
- tap hole and hole for pop-up waste control are pre-drilled
- orientation: reversible
- sink depth: 210 mm
- cabinet size: 50 cm
- type of installation: flat on the countertop (self-rimming) or flush-mount installation
- position overflow: on the side of the bowl under drainboard
- tap ledge reinforcing for a tight and stable seating of the kitchen mixer
- corner radius: 70 mm



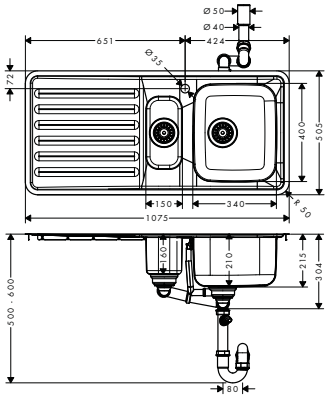

S4111-F540 Built-in sink 340/150/400 with drainboard

Stainless Steel | 43342800 | 390.00

- cut-out dimensions: 1055 x 485 mm
- Manual waste set included
- material: stainless steel
- number of bowls: 1 main bowl and 1 additional bowl
- with drainage
- tap hole for drilling is predefined (see scale drawing)
- orientation: reversible
- sink depth: 210 mm
- depth half sink: 160 mm
- cabinet size: 60 cm
- type of installation: flat on the countertop (self-rimming) or flush-mount installation
- position overflow: on the side of the bowl under drainboard
- tap ledge reinforcing for a tight and stable seating of the kitchen mixer
- corner radius: 70 mm



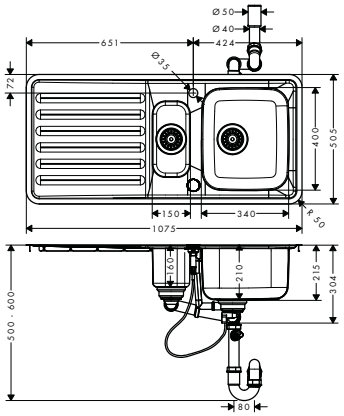

S4113-F540 Built-in sink 340/150/400 with drainboard

Stainless Steel | 43339800 | 410.00

- cut-out dimensions: 1055 x 485 mm
- Automatic waste set included
- material: stainless steel
- number of bowls: 1 main bowl and 1 additional bowl
- with drainage
- tap hole and hole for pop-up waste control are pre-drilled
- orientation: reversible
- sink depth: 210 mm
- depth half sink: 160 mm
- cabinet size: 60 cm
- type of installation: flat on the countertop (self-rimming) or flush-mount installation
- position overflow: on the side of the bowl under drainboard
- tap ledge reinforcing for a tight and stable seating of the kitchen mixer
- corner radius: 70 mm

Measurements within scale drawings are in mm.

Technical specifications and units of measure are subject to change.

	finish	code no.	Euro
 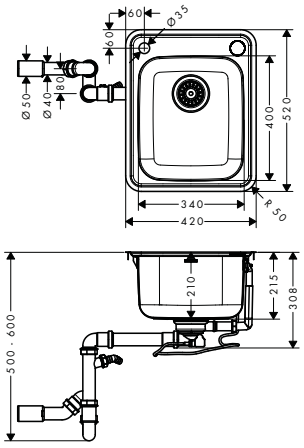	Stainless Steel	43334800	240.00

S412-F340 Built-in sink 340/400

- cut-out dimensions: 410 x 510 mm
- Automatic waste set included
- material: stainless steel
- number of bowls: 1 main bowl
- tap hole and hole for pop-up waste control are pre-drilled
- sink depth: 210 mm
- cabinet size: 45 cm
- type of installation: flat on the countertop (self-rimming) or flush-mount installation
- position overflow: on the side of the bowl
- tap ledge reinforcing for a tight and stable seating of the kitchen mixer
- corner radius: 70 mm

	finish	code no.	Euro
 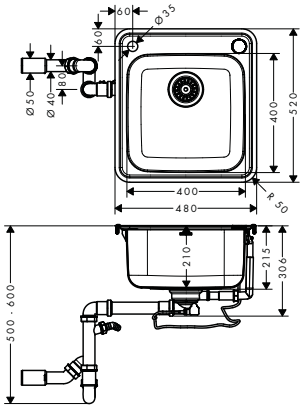	Stainless Steel	43335800	250.00

S412-F400 Built-in sink 400/400

- cut-out dimensions: 470 x 510 mm
- Automatic waste set included
- material: stainless steel
- number of bowls: 1 main bowl
- tap hole and hole for pop-up waste control are pre-drilled
- sink depth: 210 mm
- cabinet size: 50 cm
- type of installation: flat on the countertop (self-rimming) or flush-mount installation
- position overflow: on the side of the bowl
- tap ledge reinforcing for a tight and stable seating of the kitchen mixer
- corner radius: 70 mm

	finish	code no.	Euro
 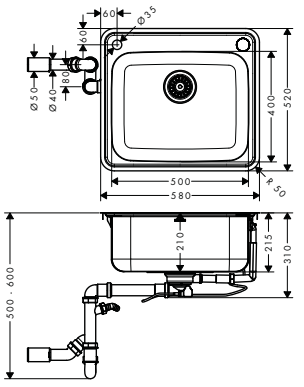	Stainless Steel	43336800	260.00

S412-F500 Built-in sink 500/400

- cut-out dimensions: 570 x 510 mm
- Automatic waste set included
- material: stainless steel
- number of bowls: 1 main bowl
- tap hole and hole for pop-up waste control are pre-drilled
- sink depth: 210 mm
- cabinet size: 60 cm
- type of installation: flat on the countertop (self-rimming) or flush-mount installation
- position overflow: on the side of the bowl
- tap ledge reinforcing for a tight and stable seating of the kitchen mixer
- corner radius: 70 mm

Measurements within scale drawings are in mm.

Technical specifications and units of measure are subject to change.

hansgrohe SilicaTec

SilicaTec sinks at a glance

sink cabinet		60 cm	
S51			
Versions	Standard	43312, -170, -290, -380	43314, -170, -290, -380 43330, -170, -290, -380
Installation options	Surface-mounted installation	■	■
	Flush-mounted installation		
	Under-mounted installation		

S51			
Versions	Standard		43431, -170, -290, -380
Installation options	Surface-mounted installation		
	Flush-mounted installation		
	Under-mounted installation		■

	80 cm		**90 cm**
			
	43313, -170, -290, -380	43315, -170, -290, -380	43316, -170, -290, -380
	■	■	■

			
	43432, -170, -290, -380	43433, -170, -290, -380	43434, -170, -290, -380
	■	■	■

SilicaTec built-in sinks

	finish	code no.	Euro



S510-F450 Built-in sink 450

	Graphiteblack	43312170	288.80
	Stonegrey	43312290	288.80
	Concretegrey	43312380	288.80

- cut-out dimensions: 540 x 490 mm
- material: SilicaTec
- number of bowls: 1 main bowl
- tap hole for drilling is predefined (see scale drawing)
- sink depth: 190 mm
- cabinet size: 60 cm
- type of installation: topmount
- position overflow: on the right side of the bowl
- waste set not included - please order one waste set from the required parts

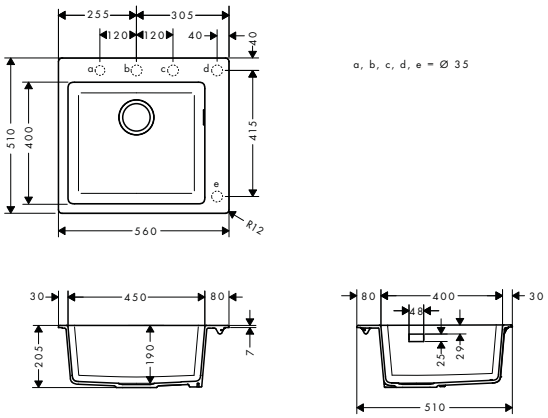

Required parts (choose one)

· D16-10 Manual waste and overflow set for single bowl granite	Chrome	43927000	24.90
· D16-11 Automatic waste and overflow set for single bowl granite	Chrome	43937000	43.60
· D16-12 Automatic waste and overflow set for single bowl granite Select	Chrome	43947000	30.10

Optional parts:

· F15 Cutting board walnut		40960000	124.50
· F16 Cutting board oak		40961000	93.40
· F17 Mobile drainboard	Stainless Steel	40962800	81.00
· F14 Multifunctional strainer	Matt Black	40963000	20.30

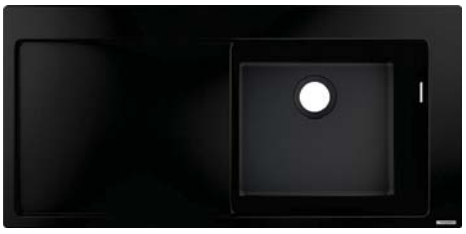

S514-F450 Built-in sink 450 with drainboard left

	Graphiteblack	43314170	448.50
	Stonegrey	43314290	448.50
	Concretegrey	43314380	448.50

- cut-out dimensions: 1030 x 490 mm
- for installation in worktops from 20 mm
- material: SilicaTec
- number of bowls: 1 main bowl
- with drainage
- tap hole for drilling is predefined (see scale drawing)
- orientation: bowl right
- sink depth: 190 mm
- cabinet size: 60 cm
- type of installation: topmount
- position overflow: on the right side of the bowl
- waste set not included - please order one waste set from the required parts

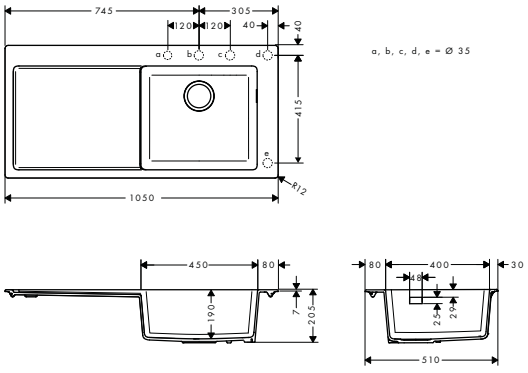

Required parts (choose one)

· D16-10 Manual waste and overflow set for single bowl granite	Chrome	43927000	24.90
· D16-11 Automatic waste and overflow set for single bowl granite	Chrome	43937000	43.60
· D16-12 Automatic waste and overflow set for single bowl granite Select	Chrome	43947000	30.10

Optional parts:

· F15 Cutting board walnut		40960000	124.50
· F16 Cutting board oak		40961000	93.40
· F14 Multifunctional strainer	Matt Black	40963000	20.30

Measurements within scale drawings are in mm.

Technical specifications and units of measure are subject to change.



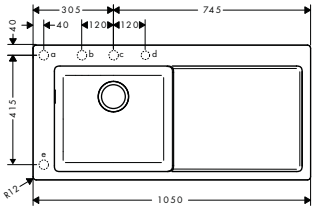

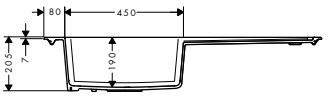

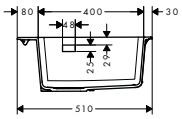

S5110-F450 Built-in sink 450 with drainboard right

- cut-out dimensions: 1030 x 490 mm
- for installation in worktops from 20 mm
- material: SilicaTec
- number of bowls: 1 main bowl
- with drainage
- tap hole for drilling is predefined (see scale drawing)
- orientation: bowl left
- sink depth: 190 mm
- cabinet size: 60 cm
- type of installation: topmount
- position overflow: on the left side of the bowl
- waste set not included - please order one waste set from the required parts

	finish	code no.	Euro
	Graphiteblack	43330170	448.50
	Stonegrey	43330290	448.50
	Concretegrey	43330380	448.50
Required parts (choose one)			
· D16-10 Manual waste and overflow set for single bowl granite	Chrome	43927000	24.90
· D16-11 Automatic waste and overflow set for single bowl granite	Chrome	43937000	43.60
· D16-12 Automatic waste and overflow set for single bowl granite Select	Chrome	43947000	30.10
Optional parts:			
· F15 Cutting board walnut		40960000	124.50
· F16 Cutting board oak		40961000	93.40
· F14 Multifunctional strainer	Matt Black	40963000	20.30



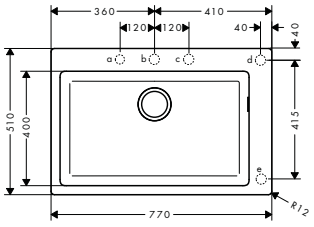

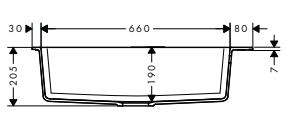

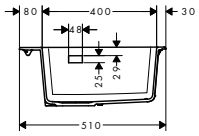

S510-F660 Built-in sink 660

- cut-out dimensions: 750 x 490 mm
- material: SilicaTec
- number of bowls: 1 main bowl
- tap hole for drilling is predefined (see scale drawing)
- sink depth: 190 mm
- cabinet size: 80 cm
- type of installation: topmount
- position overflow: on the right side of the bowl
- waste set not included - please order one waste set from the required parts

	finish	code no.	Euro
	Graphiteblack	43313170	368.60
	Stonegrey	43313290	368.60
	Concretegrey	43313380	368.60
Required parts (choose one)			
· D16-10 Manual waste and overflow set for single bowl granite	Chrome	43927000	24.90
· D16-11 Automatic waste and overflow set for single bowl granite	Chrome	43937000	43.60
· D16-12 Automatic waste and overflow set for single bowl granite Select	Chrome	43947000	30.10
Optional parts:			
· F15 Cutting board walnut		40960000	124.50
· F16 Cutting board oak		40961000	93.40
· F17 Mobile drainboard	Stainless Steel	40962800	81.00
· F14 Multifunctional strainer	Matt Black	40963000	20.30

Measurements within scale drawings are in mm.

Technical specifications and units of measure are subject to change.

	finish	code no.	Euro

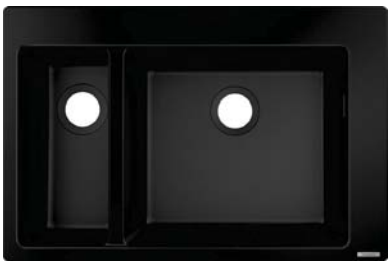

S510-F635 Built-in sink 180/450

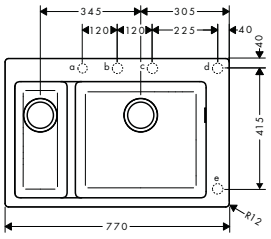

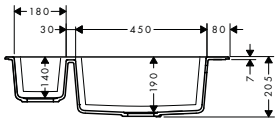

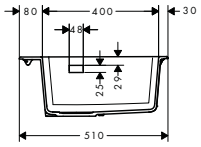

- cut-out dimensions: 750 x 490 mm
- material: SilicaTec
- number of bowls: 1 main bowl and 1 additional bowl
- tap hole for drilling is predefined (see scale drawing)
- sink depth: 190 mm
- depth half sink: 140 mm
- cabinet size: 80 cm
- type of installation: topmount
- position overflow: on the right side of the main bowl
- waste set not included - please order one waste set from the required parts

Graphiteblack		43315170	368.60
Stonegrey		43315290	368.60
Concretegrey		43315380	368.60

Required parts (choose one)

· D17-10 Manual waste and overflow set for double bowl granite	Chrome	43928000	41.50
· D17-11 Automatic waste and overflow set for double bowl granite	Chrome	43938000	67.50
· D17-12 Automatic waste and overflow set for double bowl granite Select	Chrome	43948000	47.70

Optional parts:

· F15 Cutting board walnut		40960000	124.50
· F16 Cutting board oak		40961000	93.40
· F17 Mobile drainboard	Stainless Steel	40962800	81.00
· F14 Multifunctional strainer	Matt Black	40963000	20.30

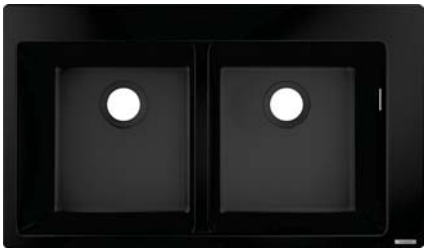

S510-F770 Built-in sink 370/370

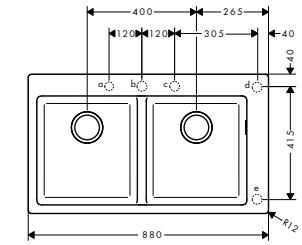

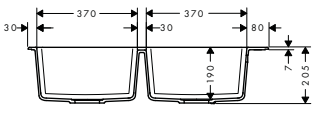

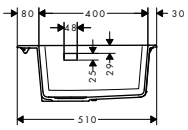

- cut-out dimensions: 860 x 490 mm
- material: SilicaTec
- number of bowls: 2 main bowls
- tap hole for drilling is predefined (see scale drawing)
- sink depth: 190 mm
- cabinet size: 90 cm
- type of installation: topmount
- position overflow: on the right side of the bowl
- waste set not included - please order one waste set from the required parts

Graphiteblack		43316170	430.10
Stonegrey		43316290	430.10
Concretegrey		43316380	430.10

Required parts (choose one)

· D17-10 Manual waste and overflow set for double bowl granite	Chrome	43928000	41.50
· D17-11 Automatic waste and overflow set for double bowl granite	Chrome	43938000	67.50
· D17-12 Automatic waste and overflow set for double bowl granite Select	Chrome	43948000	47.70

Optional parts:

· F15 Cutting board walnut		40960000	124.50
· F16 Cutting board oak		40961000	93.40
· F17 Mobile drainboard	Stainless Steel	40962800	81.00
· F14 Multifunctional strainer	Matt Black	40963000	20.30

Measurements within scale drawings are in mm.

Technical specifications and units of measure are subject to change.

SilicaTec undermount sinks

	finish	code no.	Euro



S510-U450 Under-mount sink 450

	Graphiteblack	43431170	355.30
	Stonegrey	43431290	355.30
	Concretegrey	43431380	355.30

- cut-out dimensions: 448 x 398 mm
- material: SilicaTec
- number of bowls: 1 main bowl
- sink depth: 190 mm
- cabinet size: 60 cm
- type of installation: undermount
- position overflow: on the right side of the bowl
- waste set not included - please order one waste set from the required parts

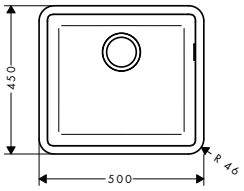

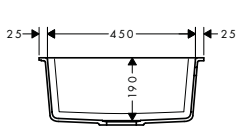

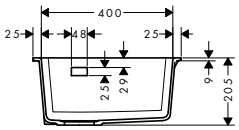

Required parts (choose one)

· D16-10 Manual waste and overflow set for single bowl granite	Chrome	43927000	24.90
· D16-11 Automatic waste and overflow set for single bowl granite	Chrome	43937000	43.60
· D16-12 Automatic waste and overflow set for single bowl granite Select	Chrome	43947000	30.10

Optional parts:

· F15 Cutting board walnut		40960000	124.50
· F16 Cutting board oak		40961000	93.40
· F17 Mobile drainboard	Stainless Steel	40962800	81.00
· F14 Multifunctional strainer	Matt Black	40963000	20.30



S510-U660 Under-mount sink 660

	Graphiteblack	43432170	435.20
	Stonegrey	43432290	435.20
	Concretegrey	43432380	435.20

- cut-out dimensions: 658 x 398 mm
- material: SilicaTec
- number of bowls: 1 main bowl
- sink depth: 190 mm
- cabinet size: 80 cm
- type of installation: undermount
- position overflow: on the right side of the bowl
- waste set not included - please order one waste set from the required parts

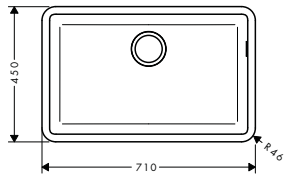

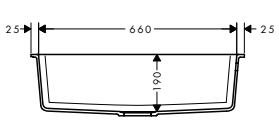

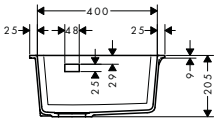

Required parts (choose one)

· D16-10 Manual waste and overflow set for single bowl granite	Chrome	43927000	24.90
· D16-11 Automatic waste and overflow set for single bowl granite	Chrome	43937000	43.60
· D16-12 Automatic waste and overflow set for single bowl granite Select	Chrome	43947000	30.10

Optional parts:

· F15 Cutting board walnut		40960000	124.50
· F16 Cutting board oak		40961000	93.40
· F17 Mobile drainboard	Stainless Steel	40962800	81.00
· F14 Multifunctional strainer	Matt Black	40963000	20.30

Measurements within scale drawings are in mm.

Technical specifications and units of measure are subject to change.

	finish	code no.	Euro

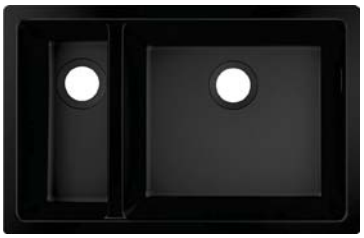

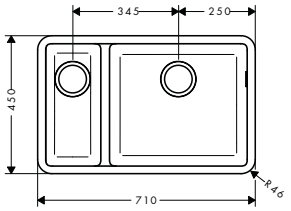

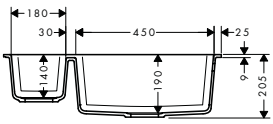

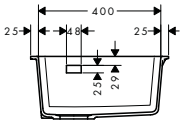

S510-U635 Under-mount sink 180/450

	Graphiteblack	43433170	435.20
	Stonegrey	43433290	435.20
	Concretegrey	43433380	435.20

- cut-out dimensions: 658 x 398 mm
- material: SilicaTec
- number of bowls: 1 main bowl and 1 additional bowl
- sink depth: 190 mm
- depth half sink: 140 mm
- cabinet size: 80 cm
- type of installation: undermount
- position overflow: on the right side of the main bowl
- waste set not included - please order one waste set from the required parts

Required parts (choose one)

· D17-10 Manual waste and overflow set for double bowl granite	Chrome	43928000	41.50
· D17-11 Automatic waste and overflow set for double bowl granite	Chrome	43938000	67.50
· D17-12 Automatic waste and overflow set for double bowl granite Select	Chrome	43948000	47.70

Optional parts:

· F15 Cutting board walnut		40960000	124.50
· F16 Cutting board oak		40961000	93.40
· F17 Mobile drainboard	Stainless Steel	40962800	81.00
· F14 Multifunctional strainer	Matt Black	40963000	20.30

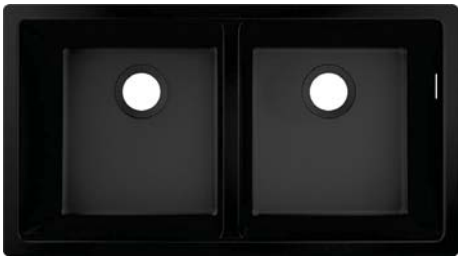

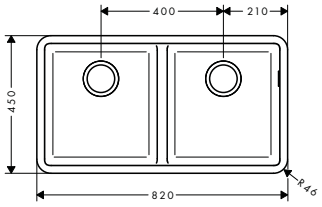

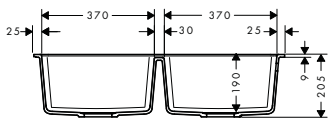

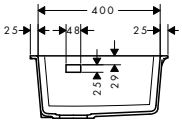

S510-U770 Under-mount sink 370/370

	Graphiteblack	43434170	496.60
	Stonegrey	43434290	496.60
	Concretegrey	43434380	496.60

- cut-out dimensions: 768 x 398 mm
- material: SilicaTec
- number of bowls: 2 main bowls
- sink depth: 190 mm
- cabinet size: 90 cm
- type of installation: undermount
- position overflow: on the right side of the bowl
- waste set not included - please order one waste set from the required parts

Required parts (choose one)

· D17-10 Manual waste and overflow set for double bowl granite	Chrome	43928000	41.50
· D17-11 Automatic waste and overflow set for double bowl granite	Chrome	43938000	67.50
· D17-12 Automatic waste and overflow set for double bowl granite Select	Chrome	43948000	47.70

Optional parts:

· F15 Cutting board walnut		40960000	124.50
· F16 Cutting board oak		40961000	93.40
· F17 Mobile drainboard	Stainless Steel	40962800	81.00
· F14 Multifunctional strainer	Matt Black	40963000	20.30

Measurements within scale drawings are in mm.

Technical specifications and units of measure are subject to change.

hansgrohe Kitchen mixers

Selected kitchen taps at a glance

		Aquno Select M81			
					
Versions	Standard (with sBox)	73831, -000, -670, -800	73830, -000, -670, -800	73805, -000, -800 73806, -000, -800	73818, -000, -340, -670, -800
	Standard (without sBox)	73837, -000, -670, -800	73836, -000, -670, -800		73819, -000, -800
	For window installation				
	For LowPressure / vented hot water cylinders				
	With shut-off valve				
	CoolStart				
	Eco			73826, -000 73827, -000	
	Wall mounting				
Features	Select	■	■	■	■
	Change spray type	■	■	■	■
	With pull-out function	■	■	■	■
	With swivel spout	■	■	■	■

		Metris M71	**Talis Select M51**		
					
Versions	Standard (with sBox)		73867, -000, -800 73868, -000, -800	73852, -000, -800 73853, -000, -800	
	Standard (without sBox)	14822, -000, -800	72823, -000, -800 72824, -000, -800	72821, -000, -800 72822, -000, -800	72820, -000, -800
	For window installation	14823, -000			
	For LowPressure / vented hot water cylinders				
	With shut-off valve	14888, -000			
	CoolStart				
	Eco	14782, -000		72826, -000	72825, -000
	Wall mounting				
Merkmale	Select		■	■	■
	Change spray type		■		
	With pull-out function		■	■	
	With swivel spout	■	■	■	■

,-000 = Chrome
,-340 = Brushed Black Chrome
,-670 = Matt Black
,- 800 = Stainless Steel Finish

Metris Select M71				**Metris M71**	
					
73804, -000, -800	73816, -000, -800 73817, -000, -800	73802, -000, -800 73803, -000, -800		73800, -000, -800 73801, -000, -800	73812, -000, -800
	73820, -000, -800 73822, -000, -800	14857, -000, -800 14884, -000, -800	14847, -000, -800 14883, -000, -800	14820, -000, -800 14834, -000, -800	14821, -000, -800
73825, -000		14786, -000 73807, -000 sBox	14785, -000	14780, -000 73823, -000 sBox 73824, -000 sBox	14781, -000 73828, -000 sBox
■	■	■	■		
	■			■	
■	■	■		■	■
■	■	■	■	■	■

Talis M51		**Talis M52**			
					
73850, -000, -800 73851, -000, -800		73863, -000, -800	73864, -000, -800		73860, -000, -800
72813, -000, -800 72815, -000, -800	72810, -000, -800 72814, -000, -800	14877, -000	14872, -000	14870, -000	32841, -000
		14877, -000 73863, -000, -800	14872, -000 73864, -000, -800		
	72812, -000				32842, -000 73861, -000 sBox
	72811, -000			14875, -000	
72817, -000 73876, -000 sBox	72816, -000	72831, -000 73879, -000 sBox	72832, -000 73878, -000 sBox		73869, 000 sBox
■		■			■
■		■	■		■
■	■	■	■	■	■

hansgrohe Kitchen mixers

Selected kitchen taps at a glance

		Talis M52	Talis M54		
					
Versions	Standard (with sBox)		72801, -000, -670, -800	72803, -000, -670, -800	
	Standard (without sBox)	32851, -000	72800, -000, -670, -800	72802, -000, -670, -800	72804, -000, -670, -800
	For window installation				
	For LowPressure / vented hot water cylinders				
	With shut-off valve		72805, -000, -670, -800		
	CoolStart				
	Eco	32857, -000	72842, -000, -670		72843, -000, -670
	Wall mounting				
Features	Select				
	Change spray type		■		
	With pull-out function		■	■	
	With swivel spout	■	■	■	■

		Focus M41	Focus M42		
					
Versions	Standard (with sBox)		71820, -000, -800 71821, -000, -800		71829, -000, -800
	Standard (without sBox)	31780, -000 31806, -000, -800	71800, -000, -800 71801, -000, -800	71802, -000, -800	71814, -000, -800
	For window installation				
	For LowPressure / vented hot water cylinders	31784, -000 31804, -000			
	With shut-off valve	31803, -000		71803, -000	
	CoolStart	31816, -000			
	Eco	31826, 000	71862, -000		71865, -000 71866, -000 CoolStart
	Wall mounting	31825, -000			
Features	Select				
	Change spray type		■		
	With pull-out function		■		■
	With swivel spout	■	■	■	■

■ Available

Talis M54			**Focus M41**		
					
	72809, -000, -670, -800		73880, -000, -800		
72806, -000, -670, -800	72808, -000, -670, -800	72840, -000, -670, -800	31815, -000, -670, -800	31817, -000, -670, -800	31820, -000, -670, -800
					31822, -000
72807, -000, -670, -800	72827, -000, -670, -800				31823, -000
72844, -000, -670	72845, -000, -670		31833, -000 73895, -000 sBox	31827, -000	31821, -000, -800
			■		
	■		■		
■	■	■	■	■	■

	Logis M31		**Logis M32**
			
71806, -000, -800 71808, -000, -800	71280, -000 71835, -000	71830, -000 71832, -000	71285, -000
71807, -000		71833, -000	
71804, -000		71831, -000	
71813, -000		71834, -000	
71805, -000 EcoSmart 71809, -000 EcoSmart		71837, -000 71839, -000	
71864, -000 CoolStart	71861, -000	71860, -000	71283, -000
		71836, -000	71284, -000 71286, -000 71287, -000
■	■	■	■

Aquno Select M81



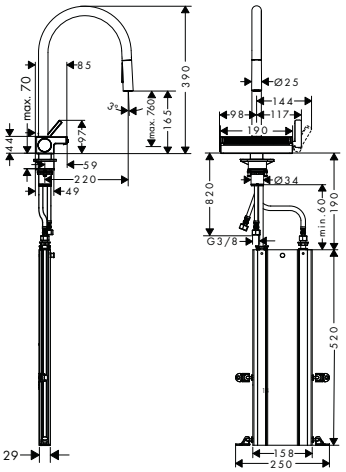

	finish	code no.	Euro
Aquno Select M81 Single lever kitchen mixer 170, pull-out spray, 3jet	Chrome	73831000	650.00
NEW	Matt Black	73831670	910.00
	Stainless Steel Finish	73831800	850.00

Select · Quick Clean · Comfort Zone

- consists of: single lever kitchen mixer, hose box, multifunctional strainer
- ComfortZone 170
- swivel range adjustable in 3 steps 60°, 110° or 150°
- laminar spray and shower spray, SatinFlow
- change between SatinFlow and pull-out spray at the touch of a button
- lockable shower spray, spray returns through pressing spray diverter
- MagFit magnetic shower support
- connection dimension: DN15
- maximum flow rate at 3 bar: 6 l/min
- ceramic cartridge
- connection type: G ⅜ connections
- integrated non-return valve
- sBox for quiet, smooth and protected hose guidance in the cabinet, under the countertop, with extension length up to 76 cm
- tap hole with Ø 35 mm required, recommendation: the middle of tap hole drilling should be max. 45 mm from the back side of of the bowl

Alternative products:

· **Aquno Select M81** Single lever kitchen mixer 170, pull-out spray, 3jet	Chrome	73837000	600.00
NEW	Matt Black	73837670	840.00
	Stainless Steel Finish	73837800	780.00



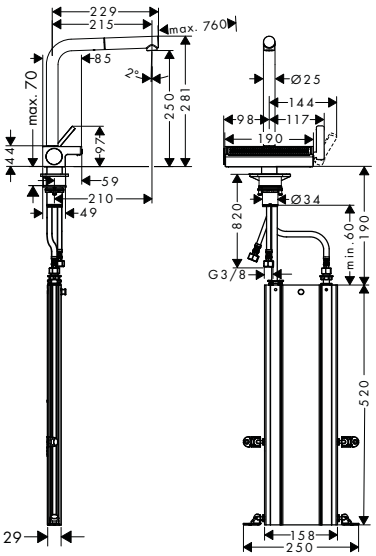

	finish	code no.	Euro
Aquno Select M81 Single lever kitchen mixer 250, pull-out spout, 2jet, sBox	Chrome	73830000	600.00
NEW	Matt Black	73830670	840.00
	Stainless Steel Finish	73830800	780.00

Select · Quick Clean · Comfort Zone

- consists of: single lever kitchen mixer, hose box, multifunctional strainer
- ComfortZone 250
- l-spout
- swivel range adjustable in 3 steps 60°, 110° or 150°
- laminar spray, SatinFlow
- change between SatinFlow and pull-out spout at the touch of a button
- MagFit magnetic shower support
- connection dimension: DN15
- maximum flow rate at 3 bar: 6 l/min
- ceramic cartridge
- connection type: G ⅜ connections
- integrated non-return valve
- sBox for quiet, smooth and protected hose guidance in the cabinet, under the countertop, with extension length up to 76 cm
- tap hole with Ø 35 mm required, recommendation: the middle of tap hole drilling should be max. 45 mm from the back side of of the bowl

Alternative products:

· **Aquno Select M81** Single lever kitchen mixer 250, pull-out spout, 2jet	Chrome	73836000	550.00
NEW	Matt Black	73836670	770.00
	Stainless Steel Finish	73836800	720.00

Measurements within scale drawings are in mm.

Technical specifications and units of measure are subject to change.

Metris Select M71

	finish	code no.	Euro
Metris Select M71 2-hole single lever kitchen mixer 320, pull-out spray, 2jet, sBox	Chrome	73806000	597.70
	Stainless Steel Finish	73806800	777.10



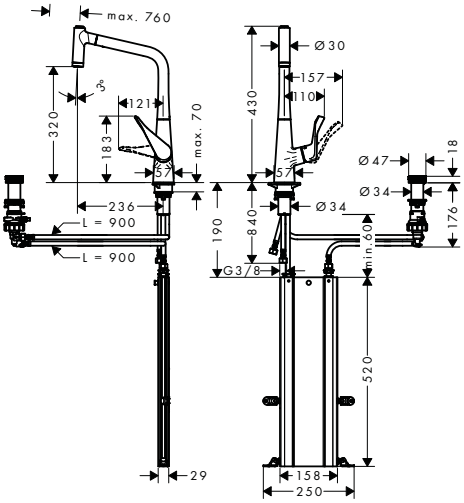

- consists of: 2-hole single lever kitchen mixer, control unit, hose box
- ComfortZone 320
- swivel range adjustable in 2 steps to 110° or 150°
- flexible position of faucet controls, 2 tap holes with Ø 35 mm required
- push of control unit: intuitive start and stop function of the water flow, turn: automatic drain operation
- laminar spray and shower spray
- lockable shower spray, spray returns automatically through handle closing
- MagFit magnetic shower support
- connection dimension: DN15
- maximum flow rate at 3 bar: 7 l/min
- ceramic cartridge
- connection type: G ⅜ connections
- integrated non-return valve
- suitable for continuous flow water heaters
- sBox for quiet, smooth and protected hose guidance in the cabinet, under the countertop, with extension length up to 76 cm

Alternative products:

· **Metris Select M71** 2-hole single lever kitchen mixer 320, Eco, pull-out spray, 2jet, sBox	Chrome	73827000	597.70

	finish	code no.	Euro
Metris Select M71 2-hole single lever kitchen mixer 220, pull-out spray, 2jet, sBox	Chrome	73805000	555.00
	Stainless Steel Finish	73805800	721.60



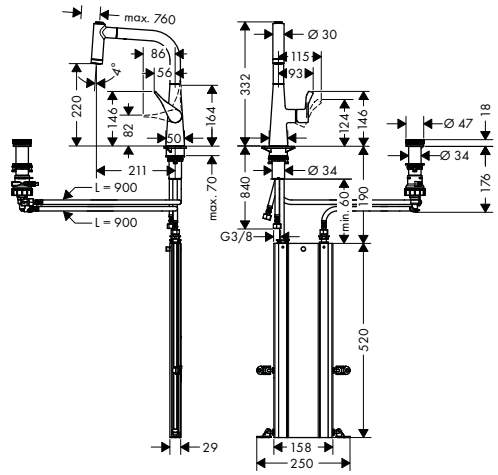

- consists of: 2-hole single lever kitchen mixer, control unit, hose box
- ComfortZone 220
- swivel range adjustable in 2 steps to 110° or 150°
- flexible position of faucet controls, 2 tap holes with Ø 35 mm required
- push of control unit: intuitive start and stop function of the water flow, turn: automatic drain operation
- laminar spray and shower spray
- lockable shower spray, spray returns automatically through handle closing
- MagFit magnetic shower support
- connection dimension: DN15
- maximum flow rate at 3 bar: 7 l/min
- ceramic cartridge
- connection type: G ⅜ connections
- integrated non-return valve
- suitable for continuous flow water heaters
- sBox for quiet, smooth and protected hose guidance in the cabinet, under the countertop, with extension length up to 76 cm

Alternative products:

· **Metris Select M71** 2-hole single lever kitchen mixer 220, Eco, pull-out spray, 2jet, sBox	Chrome	73826000	555.00



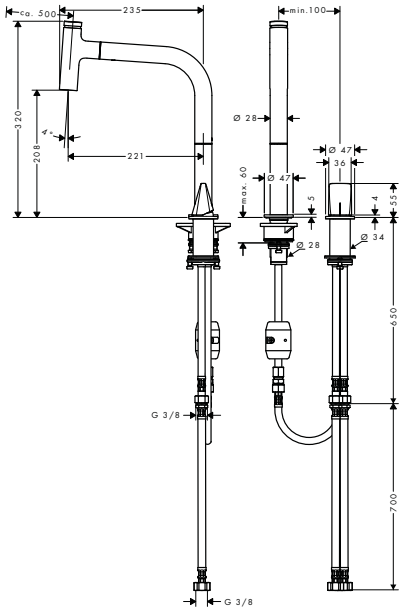

Metris Select M71 2-hole single lever kitchen mixer 200, pull-out spray, 2jet

- ComfortZone 200
- swivel range adjustable in 2 steps to 110° or 150°
- flexible position of faucet controls, 2 tap holes with Ø 35 mm required
- laminar spray and shower spray
- lockable shower spray, spray returns through pressing spray diverter and spray returns automatically through handle closing
- Select button for a comfortable start/stop of the water flow
- MagFit magnetic shower support
- quick connect hose
- connection dimension: DN15
- maximum flow rate at 3 bar: 6.8 l/min
- ceramic cartridge
- connection type: G ⅜ connections
- integrated non-return valve
- suitable for continuous flow water heaters

finish	code no.	Euro
Chrome	73819000	476.10
Stainless Steel Finish	73819800	618.90

Select · Quick Clean · Comfort Zone



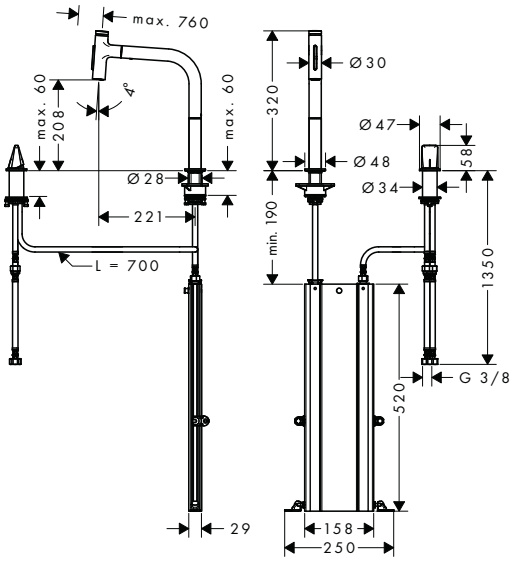

Metris Select M71 2-hole single lever kitchen mixer 200, pull-out spray, 2jet, sBox

- consists of: 2-hole single lever kitchen mixer, control unit, hose box
- ComfortZone 200
- swivel range adjustable in 2 steps to 110° or 150°
- flexible position of faucet controls, 2 tap holes with Ø 35 mm required
- laminar spray and shower spray
- lockable shower spray, spray returns through pressing spray diverter and spray returns automatically through handle closing
- Select button for a comfortable start/stop of the water flow
- MagFit magnetic shower support
- connection dimension: DN15
- maximum flow rate at 3 bar: 8 l/min
- ceramic cartridge
- connection type: G ⅜ connections
- integrated non-return valve
- suitable for continuous flow water heaters
- sBox for quiet, smooth and protected hose guidance in the cabinet, under the countertop, with extension length up to 76 cm

finish	code no.	Euro
Chrome	73818000	534.30
Brushed Black Chrome	73818340	801.50
Matt Black	73818670	748.00
Stainless Steel Finish	73818800	689.90

Select · Quick Clean · Comfort Zone

Alternative products:

- **Metris Select M71** 2-hole single lever kitchen mixer 200, pull-out spout, 1jet, sBox

Chrome	73804000	533.80
Stainless Steel Finish	73804800	693.90

Measurements within scale drawings are in mm.

Technical specifications and units of measure are subject to change.



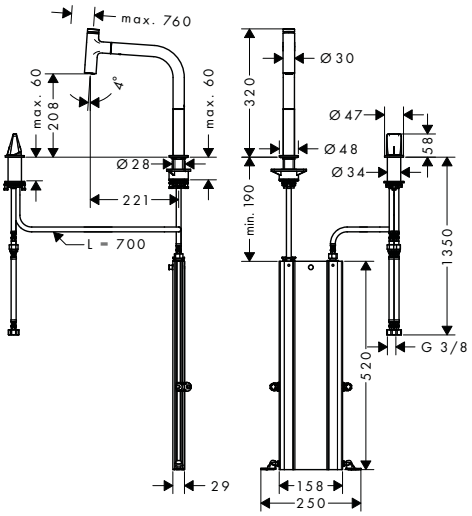

Metris Select M71 2-hole single lever kitchen mixer 200, pull-out spout, 1jet, sBox

- consists of: 2-hole single lever kitchen mixer, control unit, hose box
- ComfortZone 200
- swivel range adjustable in 2 steps to 110° or 150°
- flexible position of faucet controls, 2 tap holes with Ø 35 mm required
- normal spray
- Select button for a comfortable start/stop of the water flow
- MagFit magnetic shower support
- connection dimension: DN15
- maximum flow rate at 3 bar: 8 l/ min
- ceramic cartridge
- connection type: G ⅜ connections
- integrated non-return valve
- suitable for continuous flow water heaters
- sBox for quiet, smooth and protected hose guidance in the cabinet, under the countertop, with extension length up to 76 cm

finish	code no.	Euro
Chrome	73804000	533.80
Stainless Steel Finish	73804800	693.90

Select · Air Power · Quick Clean · Comfort Zone

Alternative products:

	finish	code no.	Euro
· **Metris Select M71** 2-hole single lever kitchen mixer 200, Eco, pull-out spout, 1jet, sBox	Chrome	73825000	533.80
· **Metris Select M71** 2-hole single lever kitchen mixer 200, pull-out spray, 2jet, sBox	Chrome	73818000	534.30
	Brushed Black Chrome	73818340	801.50
	Matt Black	73818670	748.00
	Stainless Steel Finish	73818800	689.90



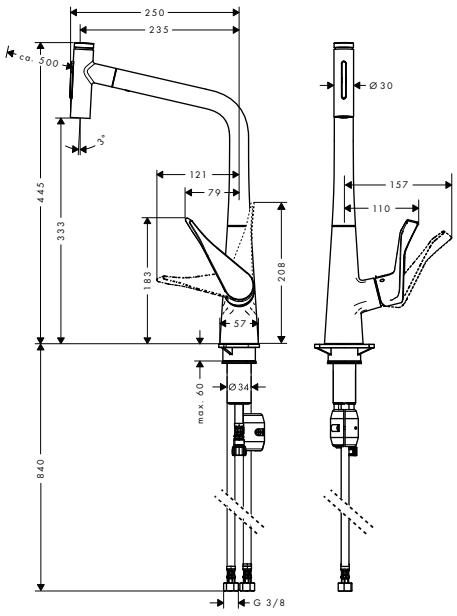

Metris Select M71 Single lever kitchen mixer 320, pull-out spray, 2jet

- ComfortZone 320
- swivel range adjustable in 2 steps to 110° or 150°
- laminar spray and shower spray
- lockable shower spray, spray returns through pressing spray diverter and spray returns automatically through handle closing
- Select button for a comfortable start/stop of the water flow
- MagFit magnetic shower support
- quick connect hose
- connection dimension: DN15
- maximum flow rate at 3 bar: 7.7 l/ min
- ceramic cartridge
- connection type: G ⅜ connections
- integrated non-return valve
- suitable for continuous flow water heaters

finish	code no.	Euro
Chrome	73820000	482.00
Stainless Steel Finish	73820800	626.50

Select · Quick Clean · Comfort Zone

Alternative products:

	finish	code no.	Euro
· **Metris Select M71** Single lever kitchen mixer 320, pull-out spout, 1jet	Chrome	14884000	481.20
	Stainless Steel Finish	14884800	625.50

Measurements within scale drawings are in mm.

Technical specifications and units of measure are subject to change.

	finish	code no.	Euro



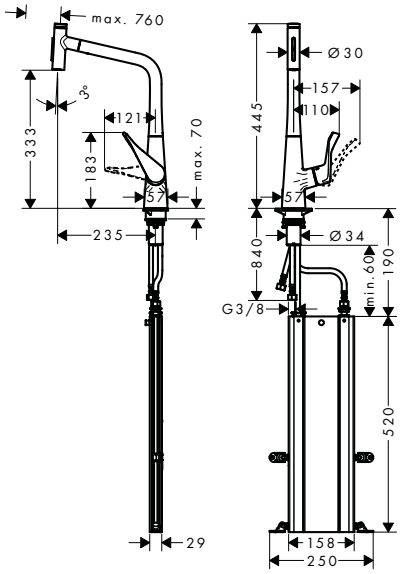

Metris Select M71 Single lever kitchen mixer 320, pull-out spray, 2jet, sBox

- consists of: single lever kitchen mixer, hose box
- ComfortZone 320
- swivel range adjustable in 2 steps to 110° or 150°
- laminar spray and shower spray
- lockable shower spray, spray returns through pressing spray diverter and spray returns automatically through handle closing
- Select button for a comfortable start/stop of the water flow
- MagFit magnetic shower support
- connection dimension: DN15
- maximum flow rate at 3 bar: 8 l/min
- ceramic cartridge
- connection type: G ⅜ connections
- integrated non-return valve
- suitable for continuous flow water heaters
- sBox for quiet, smooth and protected hose guidance in the cabinet, under the countertop, with extension length up to 76 cm
- tap hole with Ø 35 mm required

	finish	code no.	Euro
	Chrome	73816000	525.80
	Stainless Steel Finish	73816800	661.60

Alternative products:

	finish	code no.	Euro
· **Metris Select M71** Single lever kitchen mixer 320, pull-out spout, 1jet, sBox	Chrome	73803000	525.00
	Stainless Steel Finish	73803800	664.80



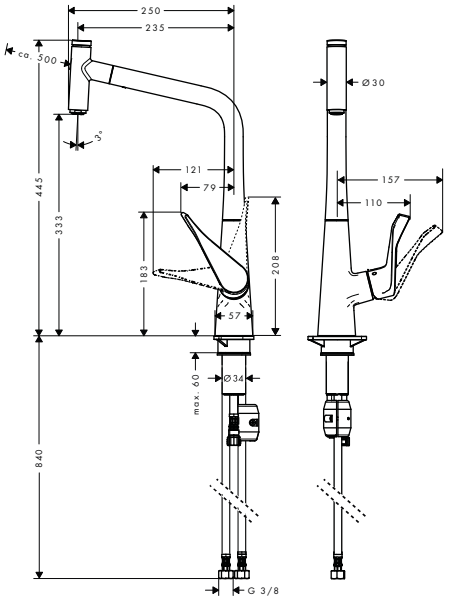

Metris Select M71 Single lever kitchen mixer 320, pull-out spout, 1jet

- ComfortZone 320
- swivel range adjustable in 2 steps to 110° or 150°
- laminar spray
- Select button for a comfortable start/stop of the water flow
- MagFit magnetic shower support
- quick connect hose
- connection dimension: DN15
- maximum flow rate at 3 bar: 8 l/min
- ceramic cartridge
- connection type: G ⅜ connections
- integrated non-return valve
- suitable for continuous flow water heaters
- significantly reduced splashing by soft start of the water flow

	finish	code no.	Euro
	Chrome	14884000	481.20
	Stainless Steel Finish	14884800	625.50

Alternative products:

	finish	code no.	Euro
· **Metris Select M71** Single lever kitchen mixer 320, Eco, pull-out spout, 1jet	Chrome	14786000	481.20
· **Metris Select M71** Single lever kitchen mixer 320, pull-out spray, 2jet	Chrome	73820000	482.00
	Stainless Steel Finish	73820800	626.50

Measurements within scale drawings are in mm.

Technical specifications and units of measure are subject to change.

	finish	code no.	Euro



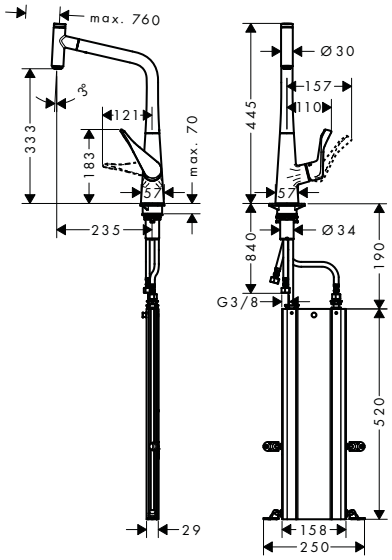

Metris Select M71 Single lever kitchen mixer 320, pull-out spout, 1jet, sBox

- consists of: single lever kitchen mixer, hose box
- ComfortZone 320
- swivel range adjustable in 2 steps to 110° or 150°
- laminar spray
- Select button for a comfortable start/stop of the water flow
- MagFit magnetic shower support
- connection dimension: DN15
- maximum flow rate at 3 bar: 8 l/min
- ceramic cartridge
- connection type: G ⅜ connections
- integrated non-return valve
- suitable for continuous flow water heaters
- sBox for quiet, smooth and protected hose guidance in the cabinet, under the countertop, with extension length up to 76 cm
- significantly reduced splashing by soft start of the water flow

	finish	code no.	Euro
	Chrome	73803000	525.00
	Stainless Steel Finish	73803800	664.80

Alternative products:

	finish	code no.	Euro
· **Metris Select M71** Single lever kitchen mixer 320, Eco, pull-out spout, 1jet, sBox	Chrome	73807000	525.00
· **Metris Select M71** Single lever kitchen mixer 320, pull-out spray, 2jet, sBox	Chrome	73816000	525.80
	Stainless Steel Finish	73816800	661.60



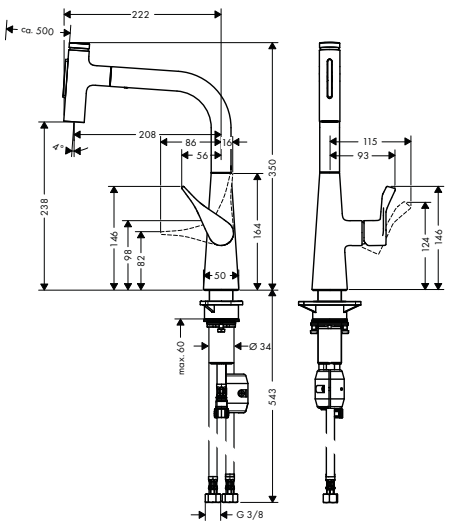

Metris Select M71 Single lever kitchen mixer 240, pull-out spray, 2jet

- ComfortZone 240
- l-spout
- swivel range adjustable in 2 steps to 110° or 150°
- laminar spray and shower spray
- lockable shower spray, spray returns through pressing spray diverter and spray returns automatically through handle closing
- Select button for a comfortable start/stop of the water flow
- MagFit magnetic shower support
- quick connect hose
- connection dimension: DN15
- maximum flow rate at 3 bar: 7.3 l/min
- ceramic cartridge
- connection type: G ⅜ connections
- integrated non-return valve
- suitable for continuous flow water heaters

	finish	code no.	Euro
	Chrome	73822000	430.00
	Stainless Steel Finish	73822800	559.30

Alternative products:

	finish	code no.	Euro
· **Metris Select M71** Single lever kitchen mixer 240, pull-out spout, 1jet	Chrome	14857000	429.60
	Stainless Steel Finish	14857800	558.50

Measurements within scale drawings are in mm.

Technical specifications and units of measure are subject to change.

	finish	code no.	Euro



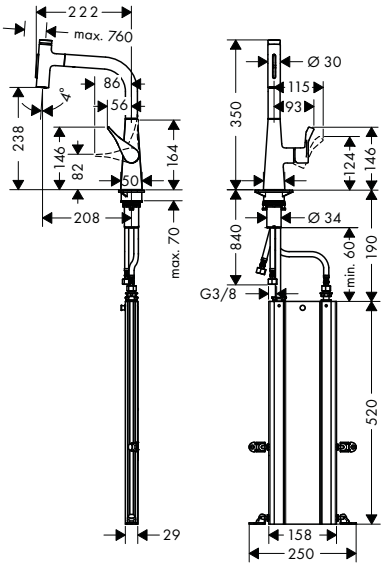

Metris Select M71 Single lever kitchen mixer 240, pull-out spray, 2jet, sBox

- consists of: single lever kitchen mixer, hose box
- ComfortZone 240
- l-spout
- swivel range adjustable in 2 steps to 110° or 150°
- laminar spray and shower spray
- lockable shower spray, spray returns through pressing spray diverter and spray returns automatically through handle closing
- Select button for a comfortable start/stop of the water flow
- MagFit magnetic shower support
- connection dimension: DN15
- maximum flow rate at 3 bar: 8 l/min
- ceramic cartridge
- connection type: G ⅜ connections
- integrated non-return valve
- suitable for continuous flow water heaters
- sBox for quiet, smooth and protected hose guidance in the cabinet, under the countertop, with extension length up to 76 cm

	Chrome	73817000	477.10
	Stainless Steel Finish	73817800	598.60

Alternative products:

- **Metris Select M71** Single lever kitchen mixer 240, pull-out spout, 1jet, sBox

	Chrome	73802000	475.00
	Stainless Steel Finish	73802800	599.90



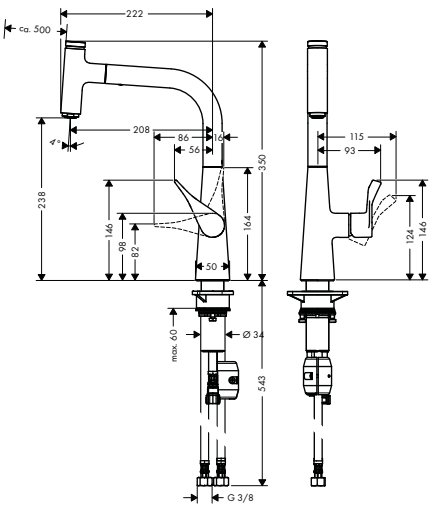

Metris Select M71 Single lever kitchen mixer 240, pull-out spout, 1jet

- ComfortZone 240
- swivel range adjustable in 2 steps to 110° or 150°
- laminar spray
- Select button for a comfortable start/stop of the water flow
- MagFit magnetic shower support
- quick connect hose
- connection dimension: DN15
- maximum flow rate at 3 bar: 8 l/min
- ceramic cartridge
- connection type: G ⅜ connections
- integrated non-return valve
- suitable for continuous flow water heaters
- significantly reduced splashing by soft start of the water flow

	Chrome	14857000	429.60
	Stainless Steel Finish	14857800	558.50

Alternative products:

- **Metris Select M71** Single lever kitchen mixer 240, pull-out spray, 2jet

	Chrome	73822000	430.00
	Stainless Steel Finish	73822800	559.30

Measurements within scale drawings are in mm.

Technical specifications and units of measure are subject to change.

	finish	code no.	Euro

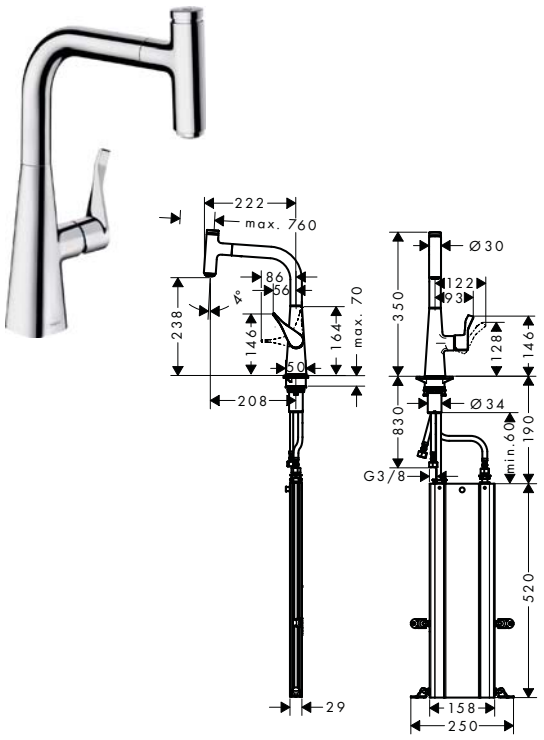

Metris Select M71 Single lever kitchen mixer 240, pull-out spout, 1jet, sBox

- consists of: single lever kitchen mixer, hose box
- ComfortZone 240
- swivel range adjustable in 2 steps to 110° or 150°
- laminar spray
- Select button for a comfortable start/stop of the water flow
- MagFit magnetic shower support
- connection dimension: DN15
- maximum flow rate at 3 bar: 8 l/min
- ceramic cartridge
- connection type: G ⅜ connections
- integrated non-return valve
- suitable for continuous flow water heaters
- sBox for quiet, smooth and protected hose guidance in the cabinet, under the countertop, with extension length up to 76 cm
- significantly reduced splashing by soft start of the water flow

	finish	code no.	Euro
	Chrome	73802000	475.00
	Stainless Steel Finish	73802800	599.90

Alternative products:

	finish	code no.	Euro
· **Metris Select M71** Single lever kitchen mixer 240, pull-out spray, 2jet, sBox	Chrome	73817000	477.10
	Stainless Steel Finish	73817800	598.60

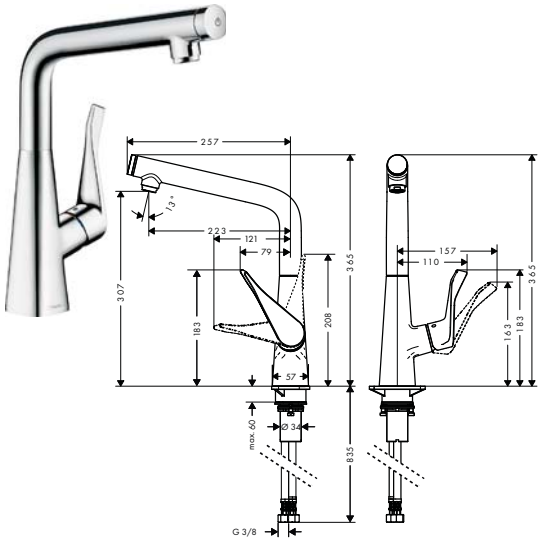

Metris Select M71 Single lever kitchen mixer 320, 1jet

- ComfortZone 320
- swivel range adjustable in 3 steps 110°, 150° or 360°
- laminar spray
- Select button for a comfortable start/stop of the water flow
- connection dimension: DN15
- maximum flow rate at 3 bar: 8 l/min
- ceramic cartridge
- connection type: G ⅜ connections
- integrated non-return valve
- suitable for continuous flow water heaters
- significantly reduced splashing by soft start of the water flow

	finish	code no.	Euro
	Chrome	14883000	407.90
	Stainless Steel Finish	14883800	519.70

Alternative products:

	finish	code no.	Euro
· **Metris Select M71** Single lever kitchen mixer 320, Eco, 1jet	Chrome	14785000	407.90

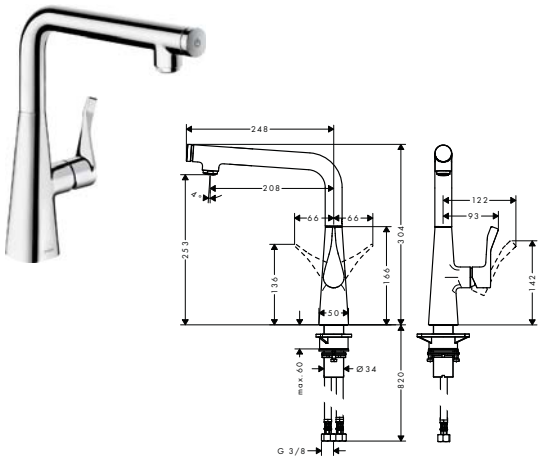

Metris Select M71 Single lever kitchen mixer 260, 1jet

- ComfortZone 260
- swivel range adjustable in 3 steps 110°, 150° or 360°
- laminar spray
- Select button for a comfortable start/stop of the water flow
- connection dimension: DN15
- maximum flow rate at 3 bar: 10 l/min
- ceramic cartridge
- connection type: G ⅜ connections
- integrated non-return valve
- suitable for continuous flow water heaters
- significantly reduced splashing by soft start of the water flow

	finish	code no.	Euro
	Chrome	14847000	357.60
	Stainless Steel Finish	14847800	465.40

Measurements within scale drawings are in mm.

Technical specifications and units of measure are subject to change.

Metris M71

	finish	code no.	Euro
Metris M71 Single lever kitchen mixer 320, pull-out spray, 2jet	Chrome	14820000	470.00
	Stainless Steel Finish	14820800	610.70

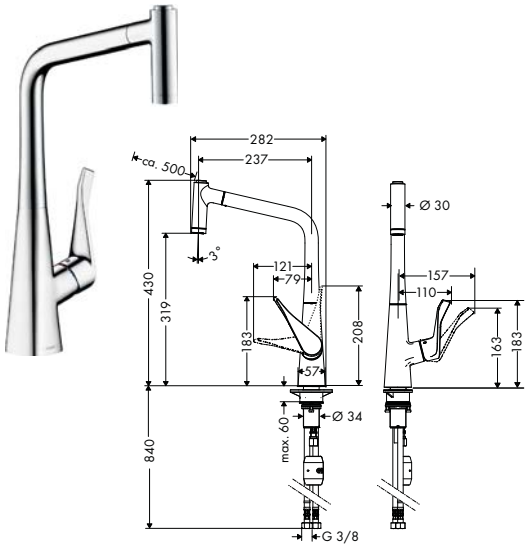

- ComfortZone 320
- swivel range adjustable in 2 steps to 110° or 150°
- laminar spray and shower spray
- lockable shower spray, spray returns automatically through handle closing
- MagFit magnetic shower support
- quick connect hose
- connection dimension: DN15
- maximum flow rate at 3 bar: 10 l/min
- ceramic cartridge
- connection type: G ⅜ connections
- integrated non-return valve
- suitable for continuous flow water heaters

Alternative products:

· **Metris M71** Single lever kitchen mixer 320, Eco, pull-out spray, 2jet	Chrome	14780000	470.00

	finish	code no.	Euro
Metris M71 Single lever kitchen mixer 320, pull-out spray, 2jet, sBox	Chrome	73801000	514.10
	Stainless Steel Finish	73801800	650.70

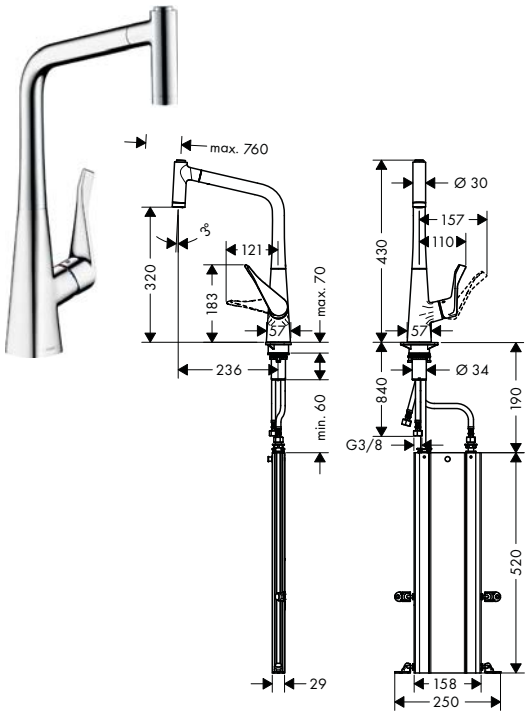

- consists of: single lever kitchen mixer, hose box
- ComfortZone 320
- swivel range adjustable in 2 steps to 110° or 150°
- laminar spray and shower spray
- lockable shower spray, spray returns automatically through handle closing
- MagFit magnetic shower support
- connection dimension: DN15
- maximum flow rate at 3 bar: 8 l/min
- ceramic cartridge
- connection type: G ⅜ connections
- integrated non-return valve
- suitable for continuous flow water heaters
- sBox for quiet, smooth and protected hose guidance in the cabinet, under the countertop, with extension length up to 76 cm

Alternative products:

· **Metris M71** Single lever kitchen mixer 320, Eco, pull-out spray, 2jet, sBox	Chrome	73824000	514.10

	finish	code no.	Euro
Metris M71 Single lever kitchen mixer 220, pull-out spray, 2jet	Chrome	14834000	418.70
	Stainless Steel Finish	14834800	544.20

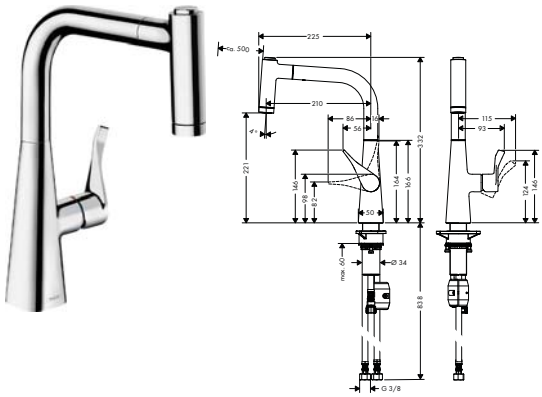

- ComfortZone 220
- swivel range adjustable in 2 steps to 110° or 150°
- laminar spray and shower spray
- lockable shower spray, spray returns automatically through handle closing
- MagFit magnetic shower support
- quick connect hose
- connection dimension: DN15
- maximum flow rate at 3 bar: 9 l/min
- ceramic cartridge
- connection type: G ⅜ connections
- integrated non-return valve
- suitable for continuous flow water heaters

Measurements within scale drawings are in mm.

Technical specifications and units of measure are subject to change.

	finish	code no.	Euro



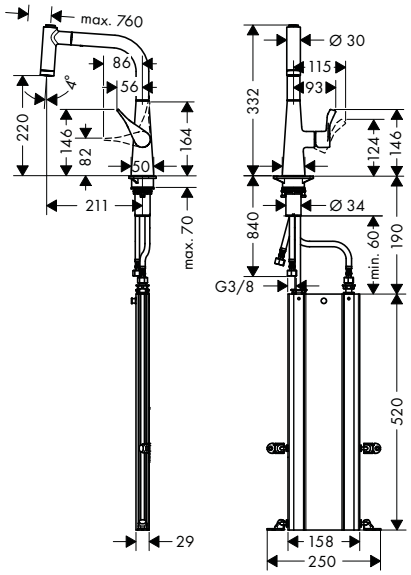

Metris M71 Single lever kitchen mixer 220, pull-out spray, 2jet, sBox

Chrome	73800000	464.30
Stainless Steel Finish	73800800	586.00

Quick Clean · Comfort Zone

- consists of: single lever kitchen mixer, hose box
- ComfortZone 220
- swivel range adjustable in 2 steps to 110° or 150°
- laminar spray and shower spray
- lockable shower spray, spray returns automatically through handle closing
- MagFit magnetic shower support
- connection dimension: DN15
- maximum flow rate at 3 bar: 8 l/min
- ceramic cartridge
- connection type: G ⅜ connections
- integrated non-return valve
- suitable for continuous flow water heaters
- sBox for quiet, smooth and protected hose guidance in the cabinet, under the countertop, with extension length up to 76 cm

Alternative products:

· **Metris M71** Single lever kitchen mixer 220, Eco, pull-out spray, 2jet, sBox	Chrome	73823000	464.30

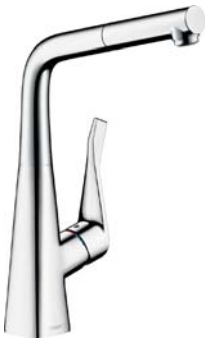

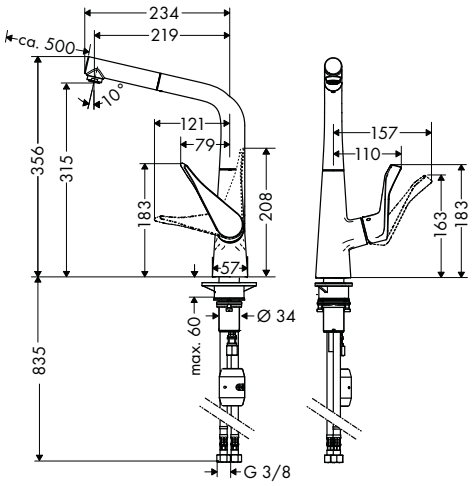

Metris M71 Single lever kitchen mixer 320, pull-out spout, 1jet

Chrome	14821000	379.50
Stainless Steel Finish	14821800	494.00

Comfort Zone

- ComfortZone 320
- swivel range adjustable in 2 steps to 110° or 150°
- laminar spray
- MagFit magnetic shower support
- quick connect hose
- connection dimension: DN15
- maximum flow rate at 3 bar: 10 l/min
- ceramic cartridge
- connection type: G ⅜ connections
- integrated non-return valve
- suitable for continuous flow water heaters
- significantly reduced splashing by soft start of the water flow

Alternative products:

· **Metris M71** Single lever kitchen mixer 320, Eco, pull-out spout, 1jet	Chrome	14781000	379.50

Measurements within scale drawings are in mm.

Technical specifications and units of measure are subject to change.

	finish	code no.	Euro

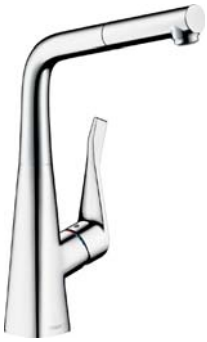

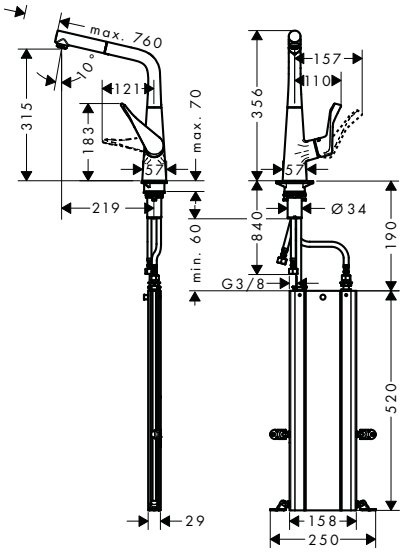

Metris M71 Single lever kitchen mixer 320, pull-out spout, 1jet, sBox

- consists of: single lever kitchen mixer, hose box
- ComfortZone 320
- swivel range adjustable in 2 steps to 110° or 150°
- laminar spray
- MagFit magnetic shower support
- connection dimension: DN15
- maximum flow rate at 3 bar: 10 l/min
- ceramic cartridge
- connection type: G ⅜ connections
- integrated non-return valve
- suitable for continuous flow water heaters
- sBox for quiet, smooth and protected hose guidance in the cabinet, under the countertop, with extension length up to 76 cm
- significantly reduced splashing by soft start of the water flow

	finish	code no.	Euro
Chrome		73812000	426.50
Stainless Steel Finish		73812800	537.40

Comfort Zone

Alternative products:

· **Metris M71** Single lever kitchen mixer 320, Eco, pull-out spout, 1jet, sBox	Chrome	73828000	426.50

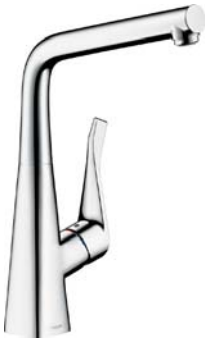

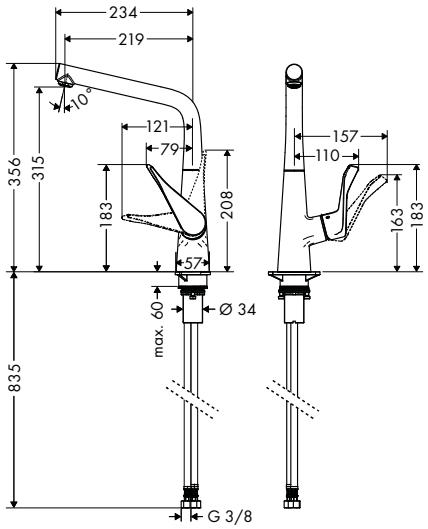

Metris M71 Single lever kitchen mixer 320, 1jet

- ComfortZone 320
- swivel range adjustable in 3 steps 110°, 150° or 360°
- laminar spray
- connection dimension: DN15
- maximum flow rate at 3 bar: 13 l/min
- ceramic cartridge
- connection type: G ⅜ connections
- suitable for continuous flow water heaters
- significantly reduced splashing by soft start of the water flow

	finish	code no.	Euro
Chrome		14822000	321.10
Stainless Steel Finish		14822800	417.60

Comfort Zone

Alternative products:

· **Metris M71** Single lever kitchen mixer 320, Eco, 1jet	Chrome	14782000	321.10
· **Metris M71** Single lever kitchen mixer 320, installation in front of a window, 1jet	Chrome	14823000	379.50

Measurements within scale drawings are in mm.

Technical specifications and units of measure are subject to change.

	finish	code no.	Euro

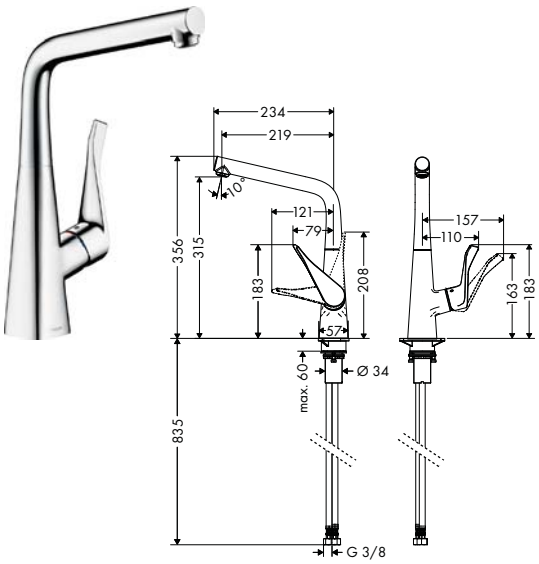

Metris M71 Single lever kitchen mixer 320, installation in front of a window, 1jet — Chrome — 14823000 — 379.50

Comfort Zone

- ComfortZone 320
- swivel range adjustable in 3 steps 110°, 150° or 360°
- installation in front of the window, can be laid flat, base height 57 mm
- laminar spray
- connection dimension: DN15
- maximum flow rate at 3 bar: 15 l/min
- ceramic cartridge
- connection type: G ⅜ connections
- suitable for continuous flow water heaters
- significantly reduced splashing by soft start of the water flow

Alternative products:

- **Metris M71** Single lever kitchen mixer 320, 1jet — Chrome — 14822000 — 321.10
  Stainless Steel Finish — 14822800 — 417.60

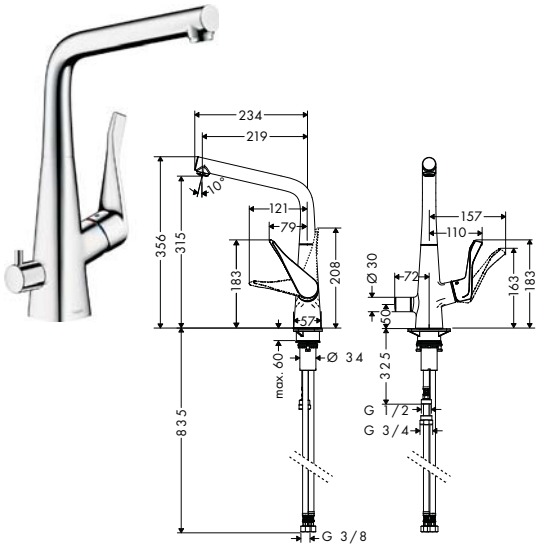

Metris M71 Single lever kitchen mixer 320, device shut-off valve,1jet — Chrome — 14888000 — 434.00

Comfort Zone

- ComfortZone 320
- swivel range adjustable in 3 steps 110°, 150° or 360°
- laminar spray
- with integrated shut-off valve
- connection dimension: DN15
- maximum flow rate at 3 bar: 13 l/min
- ceramic cartridge
- connection type: G ⅜ connections
- suitable for continuous flow water heaters
- significantly reduced splashing by soft start of the water flow

Talis Select M51

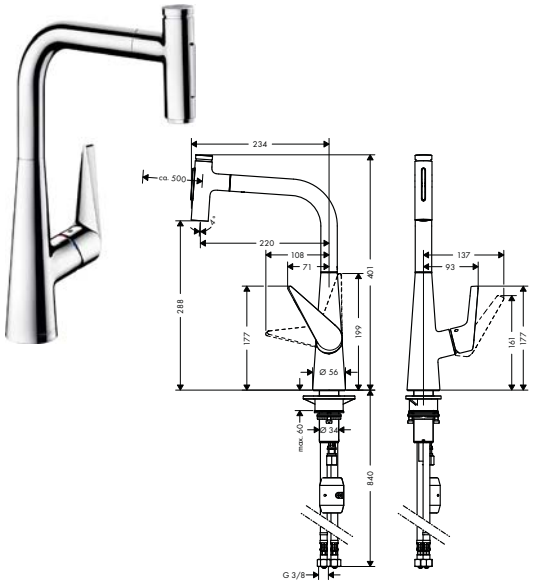

Talis Select M51 Single lever kitchen mixer 300, pull-out spray, 2jet — Chrome — 72823000 — 447.20
Stainless Steel Finish — 72823800 — 581.70

Select · Quick Clean · Comfort Zone

- ComfortZone 300
- swivel range adjustable in 2 steps to 110° or 150°
- laminar spray and shower spray
- lockable shower spray, spray returns through pressing spray diverter and spray returns automatically through handle closing
- Select button for a comfortable start/stop of the water flow
- MagFit magnetic shower support
- quick connect hose
- connection dimension: DN15
- maximum flow rate at 3 bar: 8 l/min
- ceramic cartridge
- connection type: G ⅜ connections
- integrated non-return valve
- suitable for continuous flow water heaters

Alternative products:

- **Talis Select M51** Single lever kitchen mixer 300, pull-out spout, 1jet — Chrome — 72821000 — 446.70
  Stainless Steel Finish — 72821800 — 580.90

Measurements within scale drawings are in mm.

Technical specifications and units of measure are subject to change.

	finish	code no.	Euro



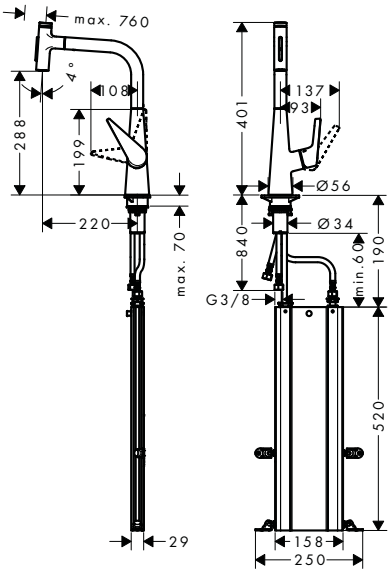

Talis Select M51 Single lever kitchen mixer 300, pull-out spray, 2jet, sBox

- consists of: single lever kitchen mixer, hose box
- ComfortZone 300
- swivel range adjustable in 2 steps to 110° or 150°
- laminar spray and shower spray
- lockable shower spray, spray returns through pressing spray diverter and spray returns automatically through handle closing
- Select button for a comfortable start/stop of the water flow
- MagFit magnetic shower support
- connection dimension: DN15
- maximum flow rate at 3 bar: 8 l/min
- ceramic cartridge
- connection type: G ⅜ connections
- integrated non-return valve
- suitable for continuous flow water heaters
- sBox for quiet, smooth and protected hose guidance in the cabinet, under the countertop, with extension length up to 76 cm

	finish	code no.	Euro
	Chrome	73867000	493.30
	Stainless Steel Finish	73867800	619.60

Alternative products:

	finish	code no.	Euro
· **Talis Select M51** Single lever kitchen mixer 300, pull-out spout, 1jet, sBox	Chrome	73853000	491.70
	Stainless Steel Finish	73853800	621.60



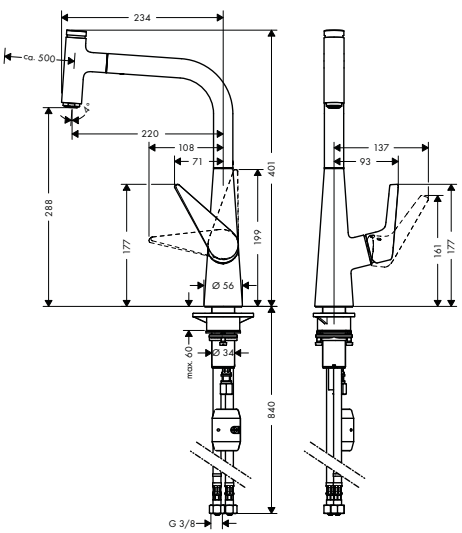

Talis Select M51 Single lever kitchen mixer 300, pull-out spout, 1jet

- ComfortZone 300
- swivel range adjustable in 2 steps to 110° or 150°
- normal spray
- Select button for a comfortable start/stop of the water flow
- MagFit magnetic shower support
- quick connect hose
- connection dimension: DN15
- maximum flow rate at 3 bar: 8 l/min
- ceramic cartridge
- connection type: G ⅜ connections
- integrated non-return valve
- suitable for continuous flow water heaters

	finish	code no.	Euro
	Chrome	72821000	446.70
	Stainless Steel Finish	72821800	580.90

Alternative products:

	finish	code no.	Euro
· **Talis Select M51** Single lever kitchen mixer 300. Eco, pull-out spout, 1jet	Chrome	72826000	446.70
· **Talis Select M51** Single lever kitchen mixer 300, pull-out spray, 2jet	Chrome	72823000	447.20
	Stainless Steel Finish	72823800	581.70

Measurements within scale drawings are in mm.

Technical specifications and units of measure are subject to change.

	finish	code no.	Euro



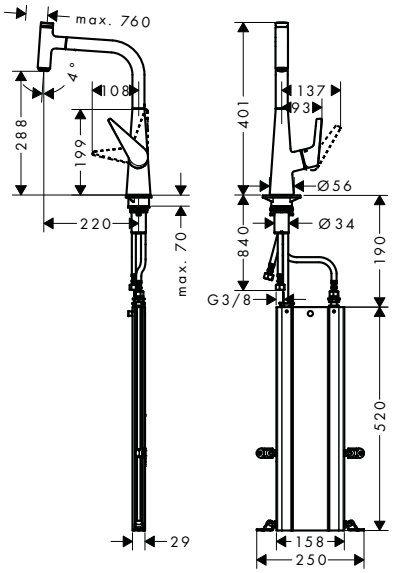

Talis Select M51 Single lever kitchen mixer 300, pull-out spout, 1jet, sBox

- consists of: single lever kitchen mixer, hose box
- ComfortZone 300
- swivel range adjustable in 2 steps to 110° or 150°
- normal spray
- Select button for a comfortable start/stop of the water flow
- MagFit magnetic shower support
- connection dimension: DN15
- maximum flow rate at 3 bar: 8 l/min
- ceramic cartridge
- connection type: G ⅜ connections
- integrated non-return valve
- suitable for continuous flow water heaters
- sBox for quiet, smooth and protected hose guidance in the cabinet, under the countertop, with extension length up to 76 cm

	Chrome	73853000	491.70
	Stainless Steel Finish	73853800	621.60

Select · Air Power · Quick Clean · Comfort Zone

Alternative products:

· **Talis Select M51** Single lever kitchen mixer 300, pull-out spray, 2jet, sBox	Chrome	73867000	493.30
	Stainless Steel Finish	73867800	619.60



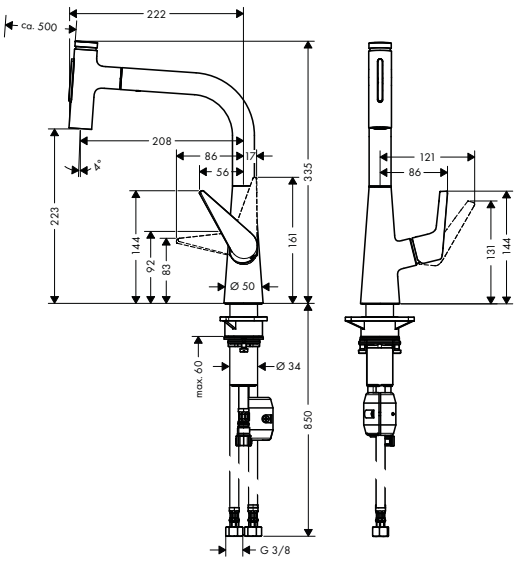

Talis Select M51 Single lever kitchen mixer 220, pull-out spray, 2jet

- ComfortZone 220
- swivel range adjustable in 2 steps to 110° or 150°
- laminar spray and shower spray
- lockable shower spray, spray returns through pressing spray diverter and spray returns automatically through handle closing
- Select button for a comfortable start/stop of the water flow
- MagFit magnetic shower support
- quick connect hose
- connection dimension: DN15
- maximum flow rate at 3 bar: 7.3 l/min
- ceramic cartridge
- connection type: G ⅜ connections
- integrated non-return valve
- suitable for continuous flow water heaters

	Chrome	72824000	397.20
	Stainless Steel Finish	72824800	515.80

Select · Quick Clean · Comfort Zone

Alternative products:

· **Talis Select M51** Single lever kitchen mixer 220, pull-out spout, 1jet	Chrome	72822000	396.60
	Stainless Steel Finish	72822800	515.50

Measurements within scale drawings are in mm.

Technical specifications and units of measure are subject to change.

	finish	code no.	Euro



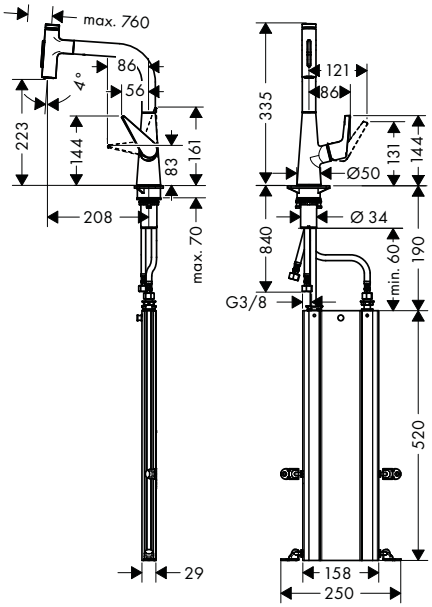

Talis Select M51 Single lever kitchen mixer 220, pull-out spray, 2jet, sBox

- consists of: single lever kitchen mixer, hose box
- ComfortZone 220
- swivel range adjustable in 2 steps to 110° or 150°
- laminar spray and shower spray
- lockable shower spray, spray returns through pressing spray diverter and spray returns automatically through handle closing
- Select button for a comfortable start/stop of the water flow
- MagFit magnetic shower support
- connection dimension: DN15
- maximum flow rate at 3 bar: 8 l/min
- ceramic cartridge
- connection type: G ⅜ connections
- integrated non-return valve
- suitable for continuous flow water heaters
- sBox for quiet, smooth and protected hose guidance in the cabinet, under the countertop, with extension length up to 76 cm

	finish	code no.	Euro
	Chrome	73868000	446.00
	Stainless Steel Finish	73868800	558.10

Alternative products:

	finish	code no.	Euro
· **Talis Select M51** Single lever kitchen mixer 220, pull-out spout, 1jet, sBox	Chrome	73852000	443.00
	Stainless Steel Finish	73852800	558.30



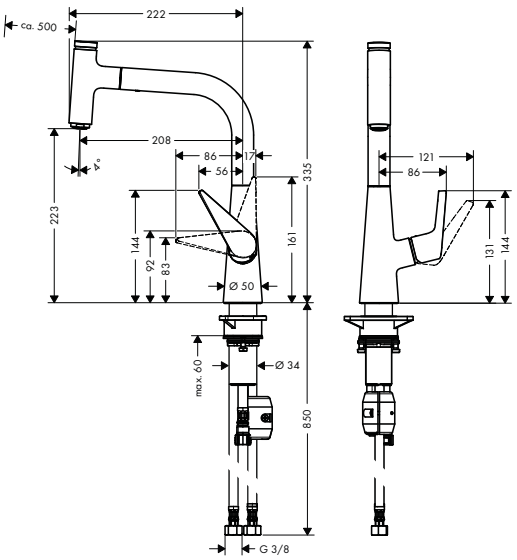

Talis Select M51 Single lever kitchen mixer 220, pull-out spout, 1jet

- ComfortZone 220
- swivel range adjustable in 2 steps to 110° or 150°
- normal spray
- Select button for a comfortable start/stop of the water flow
- MagFit magnetic shower support
- quick connect hose
- connection dimension: DN15
- maximum flow rate at 3 bar: 10 l/min
- ceramic cartridge
- connection type: G ⅜ connections
- integrated non-return valve
- suitable for continuous flow water heaters

	finish	code no.	Euro
	Chrome	72822000	396.60
	Stainless Steel Finish	72822800	515.50

Alternative products:

	finish	code no.	Euro
· **Talis Select M51** Single lever kitchen mixer 220, pull-out spray, 2jet	Chrome	72824000	397.20
	Stainless Steel Finish	72824800	515.80

Measurements within scale drawings are in mm.

Technical specifications and units of measure are subject to change.

	finish	code no.	Euro

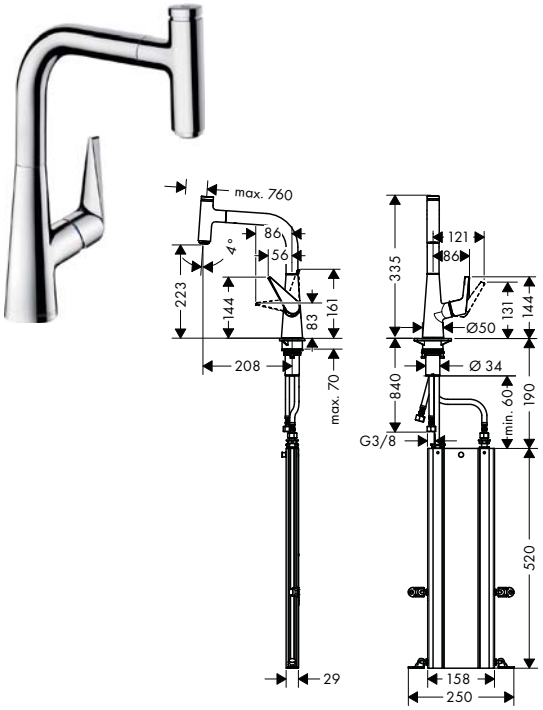

Talis Select M51 Single lever kitchen mixer 220, pull-out spout, 1jet, sBox

- consists of: single lever kitchen mixer, hose box
- ComfortZone 220
- swivel range adjustable in 2 steps to 110° or 150°
- normal spray
- Select button for a comfortable start/stop of the water flow
- MagFit magnetic shower support
- connection dimension: DN15
- maximum flow rate at 3 bar: 20 l/ min
- ceramic cartridge
- connection type: G ⅜ connections
- integrated non-return valve
- suitable for continuous flow water heaters
- sBox for quiet, smooth and protected hose guidance in the cabinet, under the countertop, with extension length up to 76 cm

	finish	code no.	Euro
	Chrome	73852000	443.00
	Stainless Steel Finish	73852800	558.30

Select · Air Power · Quick Clean · Comfort Zone

Alternative products:

	finish	code no.	Euro
· **Talis Select M51** Single lever kitchen mixer 220, pull-out spray, 2jet, sBox	Chrome	73868000	446.00
	Stainless Steel Finish	73868800	558.10

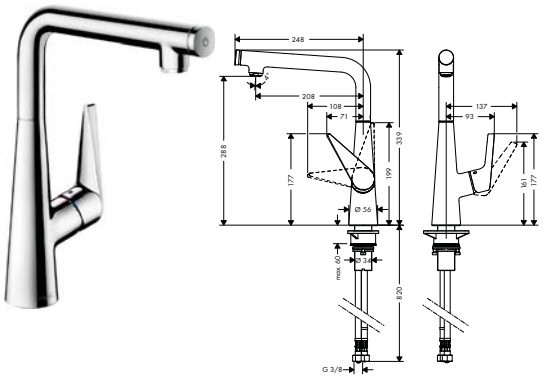

Talis Select M51 Single lever kitchen mixer 300, 1jet

- ComfortZone 300
- swivel range adjustable in 3 steps 110°, 150° or 360°
- normal spray
- Select button for a comfortable start/stop of the water flow
- connection dimension: DN15
- maximum flow rate at 3 bar: 8 l/ min
- ceramic cartridge
- connection type: G ⅜ connections
- integrated non-return valve
- suitable for continuous flow water heaters

	finish	code no.	Euro
	Chrome	72820000	368.80
	Stainless Steel Finish	72820800	479.60

Select · Air Power · Quick Clean · Comfort Zone

Alternative products:

	finish	code no.	Euro
· **Talis Select M51** Single lever kitchen mixer 300, Eco, 1jet	Chrome	72825000	368.80

Talis M51

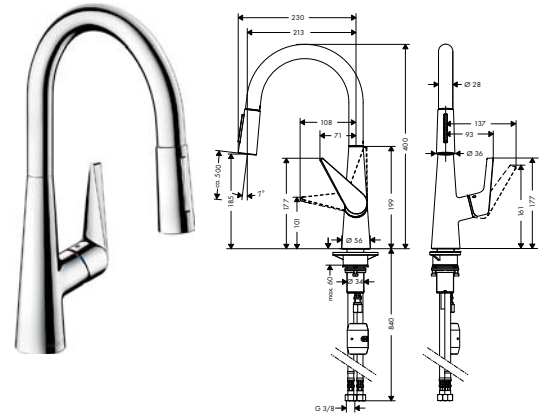

Talis M51 Single lever kitchen mixer 200, pull-out spray, 2jet

- ComfortZone 200
- swivel range adjustable in 2 steps to 110° or 150°
- laminar spray and shower spray
- lockable shower spray, spray returns through pressing spray diverter
- MagFit magnetic shower support
- quick connect hose
- connection dimension: DN15
- maximum flow rate at 3 bar: 11 l/ min
- ceramic cartridge
- connection type: G ⅜ connections
- integrated non-return valve
- suitable for continuous flow water heaters

	finish	code no.	Euro
	Chrome	72813000	366.70
	Stainless Steel Finish	72813800	476.50

Quick Clean · Comfort Zone

Alternative products:

	finish	code no.	Euro
· **Talis M51** Single lever kitchen mixer 200, Eco, pull-out spray, 2jet	Chrome	72817000	366.70

Measurements within scale drawings are in mm.

	finish	code no.	Euro
Talis M51 Single lever kitchen mixer 200, pull-out spray, 2jet, sBox	Chrome	73851000	414.00
	Stainless Steel Finish	73851800	520.40



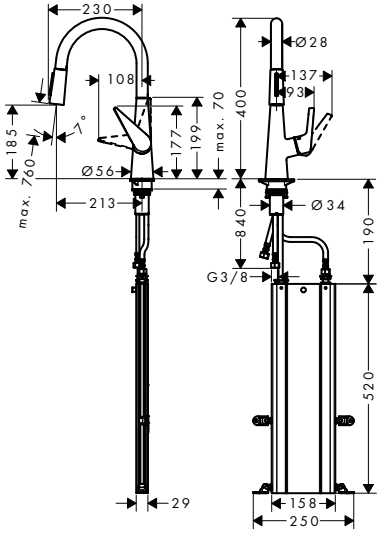

- consists of: single lever kitchen mixer, hose box
- ComfortZone 200
- swivel range adjustable in 2 steps to 110° or 150°
- laminar spray and shower spray
- lockable shower spray, spray returns through pressing spray diverter
- MagFit magnetic shower support
- connection dimension: DN15
- maximum flow rate at 3 bar: 8 l/min
- ceramic cartridge
- connection type: G ⅜ connections
- integrated non-return valve
- suitable for continuous flow water heaters
- sBox for quiet, smooth and protected hose guidance in the cabinet, under the countertop, with extension length up to 76 cm

Alternative products:

· **Talis M51** Single lever kitchen mixer 200, Eco, pull-out spray, 2jet, sBox	Chrome	73876000	414.00

Talis M51 Single lever kitchen mixer 220, 1jet

	Chrome	72814000	224.20
	Stainless Steel Finish	72814800	291.30



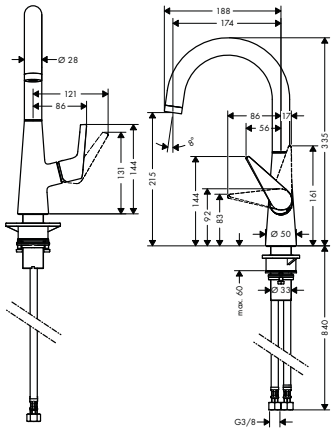

- ComfortZone 220
- swivel range adjustable in 3 steps 110°, 150° or 360°
- normal spray
- connection dimension: DN15
- maximum flow rate at 3 bar: 10 l/min
- ceramic cartridge
- connection type: G ⅜ connections
- suitable for continuous flow water heaters

Talis M51 Single lever kitchen mixer 160, pull-out spray, 2jet

	Chrome	72815000	319.50
	Stainless Steel Finish	72815800	415.30



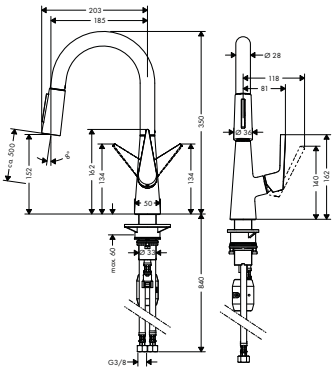

- ComfortZone 160
- swivel range adjustable in 2 steps to 110° or 150°
- laminar spray and shower spray
- lockable shower spray, spray returns through pressing spray diverter
- MagFit magnetic shower support
- quick connect hose
- connection dimension: DN15
- maximum flow rate at 3 bar: 11 l/min
- ceramic cartridge
- connection type: G ⅜ connections
- integrated non-return valve
- suitable for continuous flow water heaters

Measurements within scale drawings are in mm.

Technical specifications and units of measure are subject to change.

	finish	code no.	Euro
Talis M51 Single lever kitchen mixer 160, pull-out spray, 2jet, sBox	Chrome	73850000	368.20
	Stainless Steel Finish	73850800	461.10



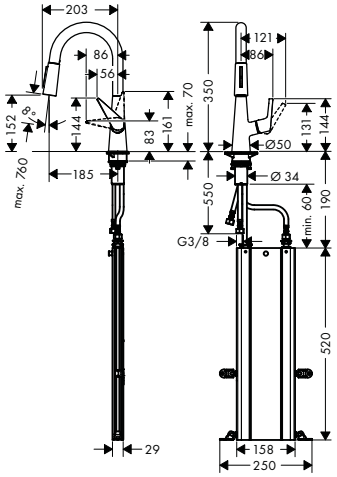

- consists of: single lever kitchen mixer, hose box
- ComfortZone 160
- swivel range adjustable in 2 steps to 110° or 150°
- laminar spray and shower spray
- lockable shower spray, spray returns through pressing spray diverter
- MagFit magnetic shower support
- connection dimension: DN15
- maximum flow rate at 3 bar: 8 l/min
- ceramic cartridge
- connection type: G ⅜ connections
- integrated non-return valve
- suitable for continuous flow water heaters
- sBox for quiet, smooth and protected hose guidance in the cabinet, under the countertop, with extension length up to 76 cm

Talis M51 Single lever kitchen mixer 260, 1jet	Chrome	72810000	255.30
	Stainless Steel Finish	72810800	332.00



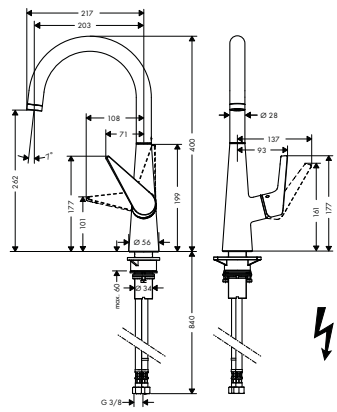

- ComfortZone 260
- swivel range adjustable in 3 steps 110°, 150° or 360°
- normal spray
- connection dimension: DN15
- maximum flow rate at 3 bar: 10 l/min
- ceramic cartridge
- connection type: G ⅜ connections
- suitable for continuous flow water heaters

Alternative products:

· **Talis M51** Single lever kitchen mixer 260, Eco, 1jet	Chrome	72816000	255.30
· **Talis M51** Single lever kitchen mixer 260, LowPressure/vented hot water cylinders, 1jet	Chrome	72812000	288.60

Talis M51 Single lever kitchen mixer 220, device shut-off valve, 1jet	Chrome	72811000	298.80

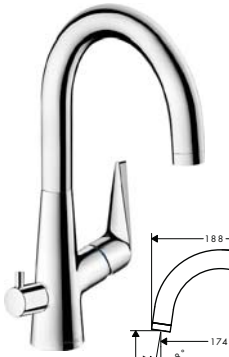

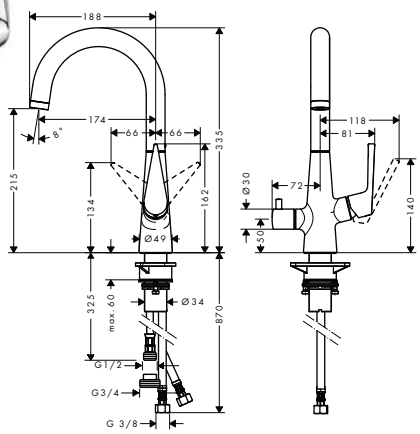

- ComfortZone 220
- swivel range adjustable in 3 steps 110°, 150° or 360°
- normal spray
- with integrated shut-off valve
- connection dimension: DN15
- maximum flow rate at 3 bar: 10 l/min
- ceramic cartridge
- connection type: G ⅜ connections
- suitable for continuous flow water heaters

Measurements within scale drawings are in mm.

Talis M52

	finish	code no.	Euro



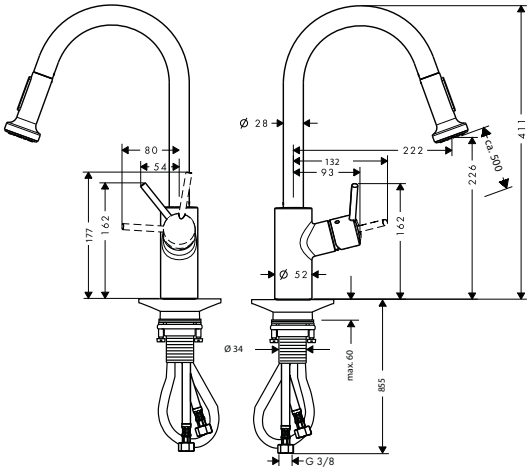

Talis M52 Single lever kitchen mixer 220, installation in front of a window, pull-out spray, 2jet

Chrome 14877000 487.10

- ComfortZone 220
- swivel range 150°
- installation in front of the window, can be laid flat, base height 70 mm
- normal and spray jet
- non-lockable shower spray
- MagFit magnetic shower support
- quick connect hose
- connection dimension: DN15
- maximum flow rate at 3 bar: 11 l/min
- ceramic cartridge
- connection type: G ⅜ connections
- integrated non-return valve
- suitable for continuous flow water heaters

Alternative products:

- **Talis M52** Single lever kitchen mixer 220, Eco, pull-out spray, 2jet — Chrome 72831000 487.10



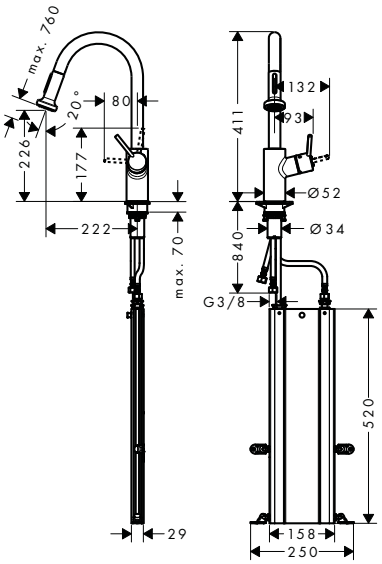

Talis M52 Single lever kitchen mixer 220, installation in front of a window, pull-out spray, 2jet, sBox

Chrome 73863000 530.60
Stainless Steel Finish 73863800 672.20

- consists of: single lever kitchen mixer, hose box
- ComfortZone 220
- swivel range 150°
- installation in front of the window, can be laid flat, base height 70 mm
- normal and spray jet
- non-lockable shower spray
- MagFit magnetic shower support
- connection dimension: DN15
- maximum flow rate at 3 bar: 11 l/min
- ceramic cartridge
- connection type: G ⅜ connections
- integrated non-return valve
- suitable for continuous flow water heaters
- sBox for quiet, smooth and protected hose guidance in the cabinet, under the countertop, with extension length up to 76 cm

Alternative products:

- **Talis M52** Single lever kitchen mixer 220, Eco, pull-out spray, 2jet, sBox — Chrome 73879000 530.60

Measurements within scale drawings are in mm.

Technical specifications and units of measure are subject to change.

	finish	code no.	Euro

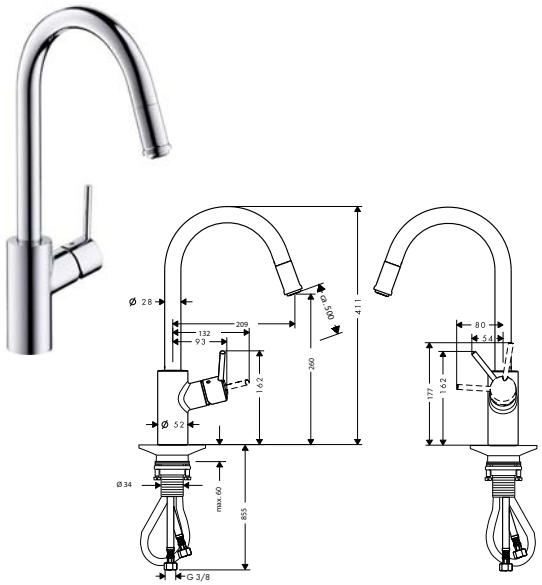

Talis M52 Single lever kitchen mixer 260, installation in front of a window, pull-out spout, 1jet

- ComfortZone 260
- swivel range 150°
- installation in front of the window, can be laid flat, base height 70 mm
- normal spray
- MagFit magnetic shower support
- quick connect hose
- connection dimension: DN15
- maximum flow rate at 3 bar: 9 l/min
- ceramic cartridge
- connection type: G ⅜ connections
- integrated non-return valve
- suitable for continuous flow water heaters

	Chrome	14872000	412.00

Alternative products:

· **Talis M52** Single lever kitchen mixer 260, Eco, pull-out spout, 1jet	Chrome	72832000	412.00



Talis M52 Single lever kitchen mixer 260, installation in front of a window, pull-out spout, 1jet, sBox

- consists of: single lever kitchen mixer, hose box
- ComfortZone 260
- swivel range 150°
- installation in front of the window, can be laid flat, base height 70 mm
- normal spray
- MagFit magnetic shower support
- connection dimension: DN15
- maximum flow rate at 3 bar: 9 l/min
- ceramic cartridge
- connection type: G ⅜ connections
- integrated non-return valve
- suitable for continuous flow water heaters
- sBox for quiet, smooth and protected hose guidance in the cabinet, under the countertop, with extension length up to 76 cm

	Chrome	73864000	457.90
	Stainless Steel Finish	73864800	577.70

Alternative products:

· **Talis M52** Single lever kitchen mixer 260, Eco, pull-out spout, 1jet, sBox	Chrome	73878000	457.90

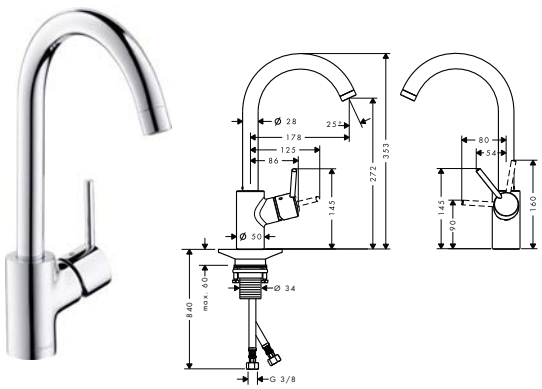

Talis M52 Single lever kitchen mixer 270, 1jet

- ComfortZone 270
- swivel range adjustable in 3 steps 110°, 150° or 360°
- normal spray
- connection dimension: DN15
- maximum flow rate at 3 bar: 10 l/min
- ceramic cartridge
- connection type: G ⅜ connections
- suitable for continuous flow water heaters

	Chrome	14870000	277.90

Measurements within scale drawings are in mm.

Technical specifications and units of measure are subject to change.

	finish	code no.	Euro

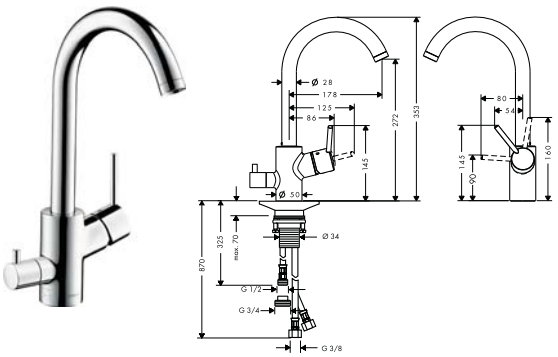

Talis M52 Single lever kitchen mixer 270, device shut-off valve, 1jet

Chrome 14875000 360.20

Air Power · Quick Clean · Comfort Zone

- ComfortZone 270
- swivel range adjustable in 3 steps 110°, 150° or 360°
- normal spray
- with integrated shut-off valve
- connection dimension: DN15
- maximum flow rate at 3 bar: 10 l/min
- ceramic cartridge
- connection type: G ⅜ connections
- suitable for continuous flow water heaters

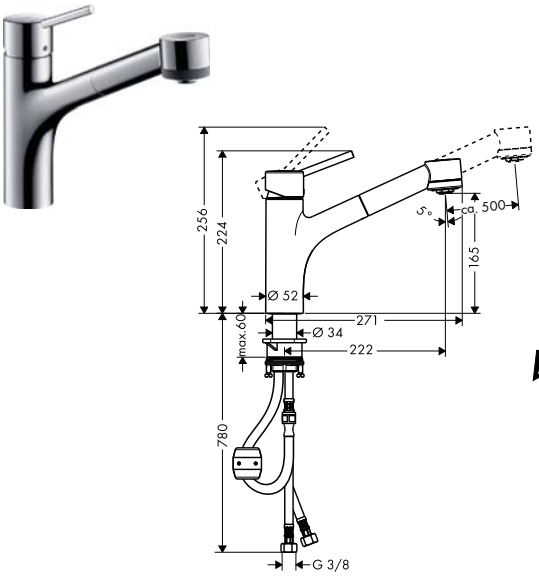

Talis M52 Single lever kitchen mixer 170, pull-out spray, 2jet

Chrome 32841000 331.80

Air Power · Quick Clean · Comfort Zone

- ComfortZone 170
- swivel range 150°
- normal and spray jet
- lockable shower spray, spray returns automatically through handle closing
- quick connect hose
- connection dimension: DN15
- maximum flow rate at 3 bar: 10 l/min
- ceramic cartridge
- connection type: G ⅜ connections
- integrated non-return valve
- suitable for continuous flow water heaters

Alternative products:

- **Talis M52** Single lever kitchen mixer 170, LowPressure/vented hot water cylinders, pull-out spray, 2jet — Chrome 32842000 353.60
- **Talis M52** Single lever kitchen mixer 170, Eco, pull-out spray, 2jet — Chrome 32845000 331.80



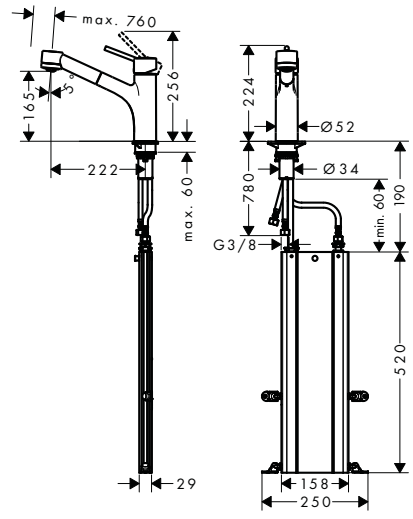

Talis M52 Single lever kitchen mixer 170, pull-out spray, 2jet, sBox

Chrome 73860000 380.20
Stainless Steel Finish 73860800 476.70

Air Power · Quick Clean · Comfort Zone

- consists of: single lever kitchen mixer, hose box
- ComfortZone 170
- swivel range 150°
- normal and spray jet
- lockable shower spray, spray returns automatically through handle closing
- connection dimension: DN15
- maximum flow rate at 3 bar: 10 l/min
- ceramic cartridge
- connection type: G ⅜ connections
- integrated non-return valve
- suitable for continuous flow water heaters
- sBox for quiet, smooth and protected hose guidance in the cabinet, under the countertop, with extension length up to 76 cm

Alternative products:

- **Talis M52** Single lever kitchen mixer 170, Eco, pull-out spray, 2jet, sBox — Chrome 73869000 380.20

Measurements within scale drawings are in mm.

Technical specifications and units of measure are subject to change.

	finish	code no.	Euro



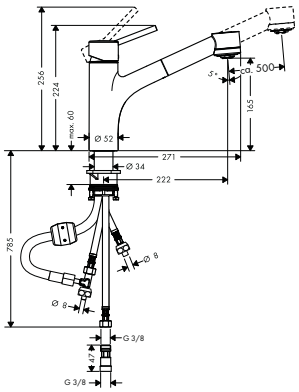

Talis M52 Single lever kitchen mixer 170, LowPressure/vented hot water cylinders, pull-out spray, 2jet

Chrome 32842000 353.60

- for vented hot water cylinders (no pressure)
- ComfortZone 170
- swivel range 150°
- normal and spray jet
- non-lockable shower spray
- quick connect hose
- connection dimension: DN15
- maximum flow rate at 3 bar: 5 l/min
- ceramic cartridge
- connection type: G ⅜ connections
- integrated non-return valve
- not suitable for continuous flow water heaters

Alternative products:

- **Talis M52** Single lever kitchen mixer 170, pull-out spray, 2jet — Chrome 32841000 331.80



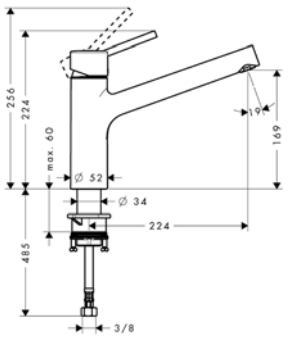

Talis M52 Single lever kitchen mixer 170, 1jet

Chrome 32851000 236.90

- ComfortZone 170
- swivel range 150°
- normal spray
- connection dimension: DN15
- maximum flow rate at 3 bar: 16 l/min
- ceramic cartridge
- connection type: G ⅜ connections
- suitable for continuous flow water heaters

Alternative products:

- **Talis M52** Single lever kitchen mixer 170, Eco, 1jet — Chrome 32857000 236.90

Talis M54



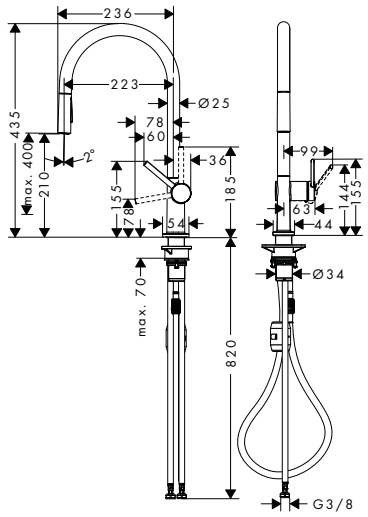

Talis M54 Single lever kitchen mixer 210, pull-out spray, 2jet

Chrome 72800000 300.00
Matt Black 72800670 390.00
Stainless Steel Finish 72800800 390.00

- ComfortZone 210
- swivel range adjustable in 4 steps 60°, 110°, 150° or 360°
- laminar spray and shower spray
- lockable shower spray, spray returns through pressing spray diverter and spray returns automatically through handle closing
- quick connect hose
- connection dimension: DN15
- maximum flow rate at 3 bar: 8 l/min
- ceramic cartridge
- connection type: G ⅜ connections
- integrated non-return valve
- suitable for continuous flow water heaters

Alternative products:

- **Talis M54** Single lever kitchen mixer 210, Eco, pull-out spray, 2jet — Chrome 72842000 300.00; Matt Black 72842670 390.00

Measurements within scale drawings are in mm.

Technical specifications and units of measure are subject to change.

	finish	code no.	Euro
Talis M54 Single lever kitchen mixer 210, pull-out spray, 2jet, sBox	Chrome	72801000	350.00
	Matt Black	72801670	455.00
	Stainless Steel Finish	72801800	455.00



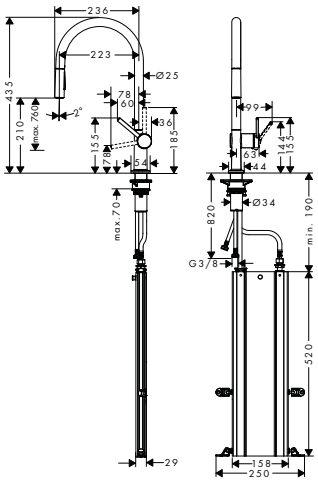

- consists of: single lever kitchen mixer, hose box
- ComfortZone 210
- swivel range adjustable in 4 steps 60°, 110°, 150° or 360°
- laminar spray and shower spray
- lockable shower spray, spray returns through pressing spray diverter and spray returns automatically through handle closing
- connection dimension: DN15
- maximum flow rate at 3 bar: 7 l/min
- ceramic cartridge
- connection type: G ⅜ connections
- integrated non-return valve
- suitable for continuous flow water heaters
- sBox for quiet, smooth and protected hose guidance in the cabinet, under the countertop, with extension length up to 76 cm

Talis M54 Single lever kitchen mixer 210, pull-out spout, 1jet	Chrome	72802000	255.00
	Matt Black	72802670	332.00
	Stainless Steel Finish	72802800	332.00



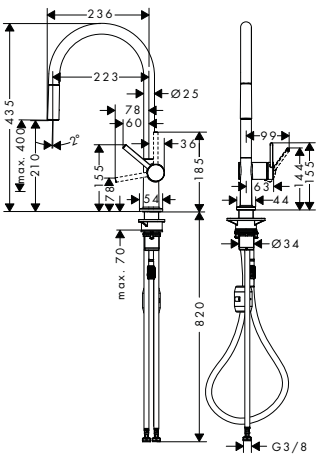

- ComfortZone 210
- swivel range adjustable in 4 steps 60°, 110°, 150° or 360°
- normal spray
- quick connect hose
- connection dimension: DN15
- maximum flow rate at 3 bar: 7 l/min
- ceramic cartridge
- connection type: G ⅜ connections
- integrated non-return valve
- suitable for continuous flow water heaters

Talis M54 Single lever kitchen mixer 210, pull-out spout, 1jet, sBox	Chrome	72803000	305.00
	Matt Black	72803670	397.00
	Stainless Steel Finish	72803800	397.00



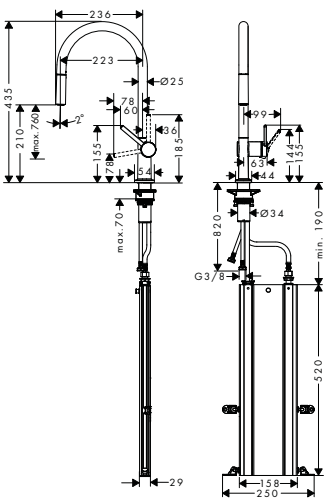

- consists of: single lever kitchen mixer, hose box
- ComfortZone 210
- swivel range adjustable in 4 steps 60°, 110°, 150° or 360°
- normal spray
- connection dimension: DN15
- maximum flow rate at 3 bar: 7 l/min
- ceramic cartridge
- connection type: G ⅜ connections
- integrated non-return valve
- suitable for continuous flow water heaters
- sBox for quiet, smooth and protected hose guidance in the cabinet, under the countertop, with extension length up to 76 cm

Measurements within scale drawings are in mm.

Technical specifications and units of measure are subject to change.

	finish	code no.	Euro

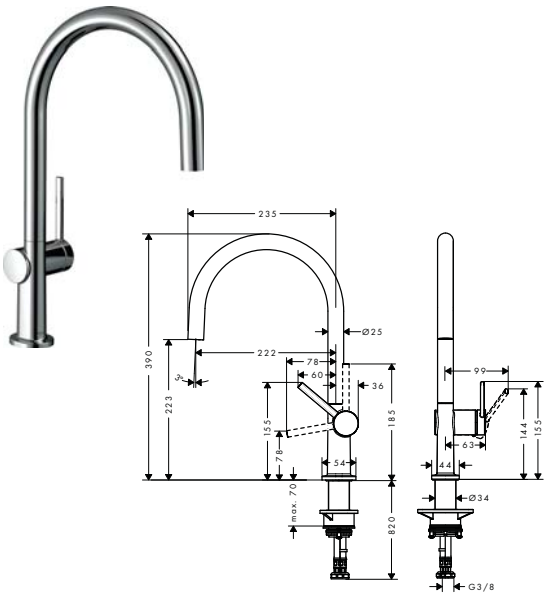

Talis M54 Single lever kitchen mixer 220, 1jet

- ComfortZone 220
- swivel range adjustable in 4 steps 60°, 110°, 150° or 360°
- laminar spray
- connection dimension: DN15
- maximum flow rate at 3 bar: 9 l/min
- ceramic cartridge
- connection type: G ⅜ connections
- suitable for continuous flow water heaters

	finish	code no.	Euro
	Chrome	72804000	205.00
	Matt Black	72804670	267.00
	Stainless Steel Finish	72804800	267.00

Alternative products:

	finish	code no.	Euro
· **Talis M54** Single lever kitchen mixer 220, Eco, 1jet	Chrome	72843000	205.00
	Matt Black	72843670	266.50

NEW

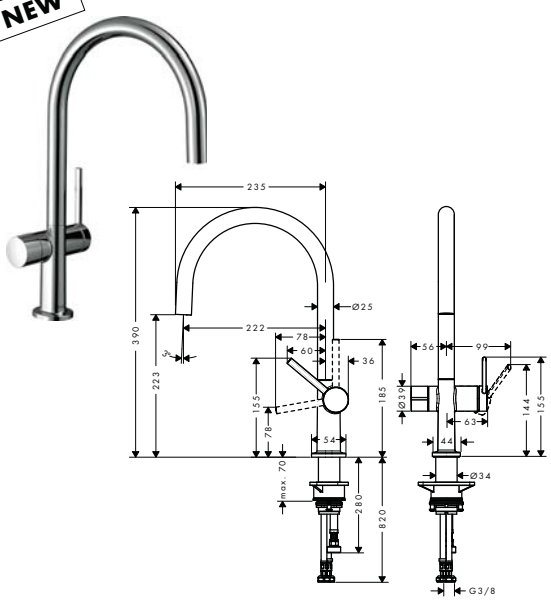

Talis M54 Single lever kitchen mixer 220, device shut-off valve, 1jet

- ComfortZone 220
- swivel range adjustable in 4 steps 60°, 110°, 150° or 360°
- laminar spray
- with integrated shut-off valve
- connection dimension: DN15
- maximum flow rate at 3 bar: 9 l/min
- ceramic cartridge
- connection type: G ⅜ connections
- suitable for continuous flow water heaters

	finish	code no.	Euro
	Chrome	72805000	250.00
	Matt Black	72805670	325.00
	Stainless Steel Finish	72805800	325.00

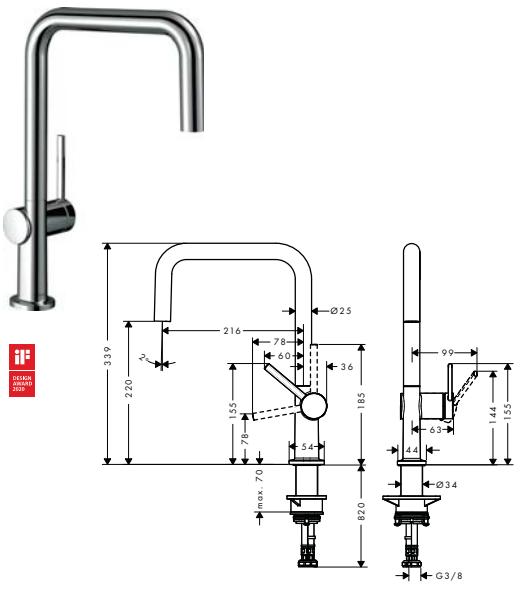

Talis M54 Single lever kitchen mixer U 220, 1jet

- ComfortZone 220
- swivel range adjustable in 4 steps 60°, 110°, 150° or 360°
- laminar spray
- connection dimension: DN15
- maximum flow rate at 3 bar: 9 l/min
- ceramic cartridge
- connection type: G ⅜ connections
- suitable for continuous flow water heaters

	finish	code no.	Euro
	Chrome	72806000	180.00
	Matt Black	72806670	234.00
	Stainless Steel Finish	72806800	234.00

Alternative products:

	finish	code no.	Euro
· **Talis M54** Single lever kitchen mixer U 220, Eco, 1jet	Chrome	72844000	180.00
	Matt Black	72844670	234.00

Measurements within scale drawings are in mm.

Technical specifications and units of measure are subject to change.

	finish	code no.	Euro
Talis M54 Single lever kitchen mixer U 220, device shut-off valve, 1jet	Chrome	72807000	225.00
	Matt Black	72807670	292.50
	Stainless Steel Finish	72807800	292.50

NEW

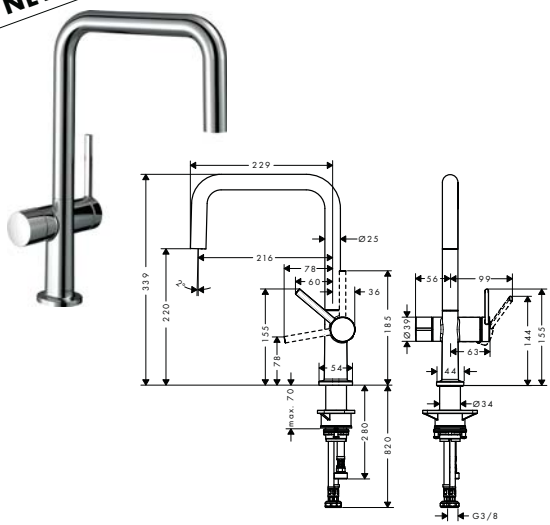

- ComfortZone 220
- swivel range adjustable in 4 steps 60°, 110°, 150° or 360°
- laminar spray
- with integrated shut-off valve
- device connection DN20
- connection dimension: DN15
- maximum flow rate at 3 bar: 8 l/min
- ceramic cartridge
- connection type: G ⅜ connections
- suitable for continuous flow water heaters

Quick Clean | Comfort Zone

Talis M54 Single lever kitchen mixer 270, pull-out spout, 1jet

	Chrome	72808000	205.00
	Matt Black	72808670	267.00
	Stainless Steel Finish	72808800	267.00

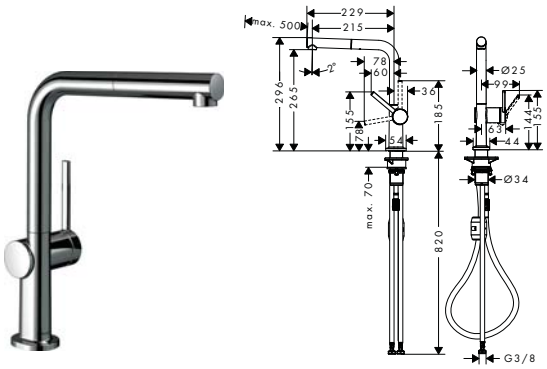

- ComfortZone 270
- swivel range adjustable in 4 steps 60°, 110°, 150° or 360°
- laminar spray
- quick connect hose
- connection dimension: DN15
- maximum flow rate at 3 bar: 8 l/min
- ceramic cartridge
- connection type: G ⅜ connections
- integrated non-return valve
- suitable for continuous flow water heaters

Quick Clean | Comfort Zone

Alternative products:

- **Talis M54** Single lever kitchen mixer 270, Eco, pull-out spout, 1jet

Chrome	72845000	205.00
Matt Black	72845670	266.50

Talis M54 Single lever kitchen mixer 270, pull-out spout, 1jet, sBox

	Chrome	72809000	255.00
	Matt Black	72809670	332.00
	Stainless Steel Finish	72809800	332.00

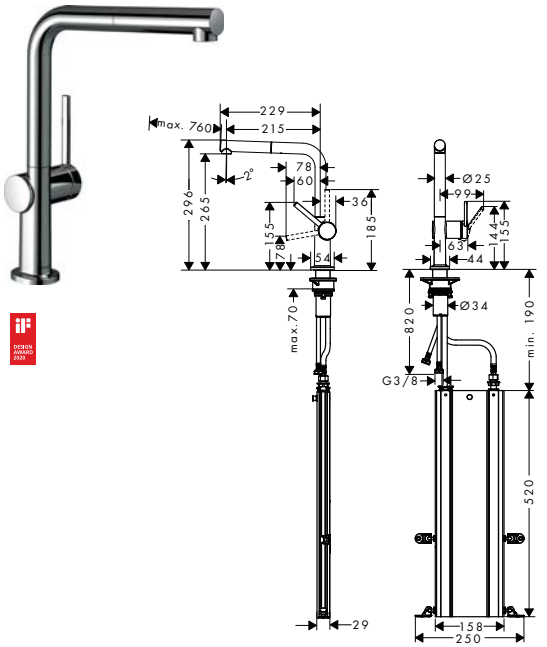

- consists of: single lever kitchen mixer, hose box
- ComfortZone 270
- l-spout
- swivel range adjustable in 4 steps 60°, 110°, 150° or 360°
- laminar spray
- connection dimension: DN15
- maximum flow rate at 3 bar: 7 l/min
- ceramic cartridge
- connection type: G ⅜ connections
- integrated non-return valve
- suitable for continuous flow water heaters
- sBox for quiet, smooth and protected hose guidance in the cabinet, under the countertop, with extension length up to 76 cm

Quick Clean | Comfort Zone

Measurements within scale drawings are in mm.

Technical specifications and units of measure are subject to change.

	finish	code no.	Euro
Talis M54 Single lever kitchen mixer 270, 1jet	Chrome	72840000	175.00
	Matt Black	72840670	228.00
	Stainless Steel Finish	72840800	228.00

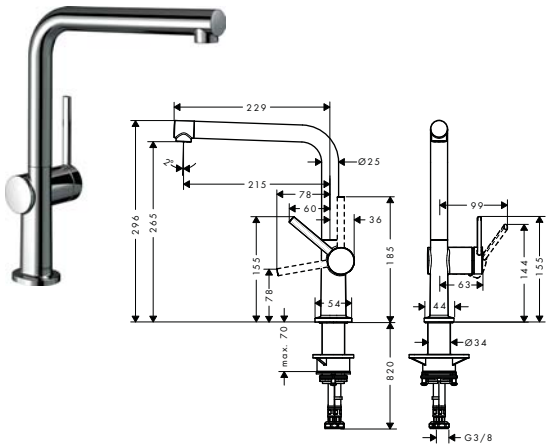

- ComfortZone 270
- l-spout
- swivel range adjustable in 4 steps 60°, 110°, 150° or 360°
- laminar spray
- connection dimension: DN15
- maximum flow rate at 3 bar: 8.4 l/ min
- ceramic cartridge
- connection type: G ⅜ connections
- suitable for continuous flow water heaters

NEW

	finish	code no.	Euro
Talis M54 Single lever kitchen mixer 270, device shut-off valve, 1jet	Chrome	72827000	225.00
	Matt Black	72827670	292.50
	Stainless Steel Finish	72827800	292.50

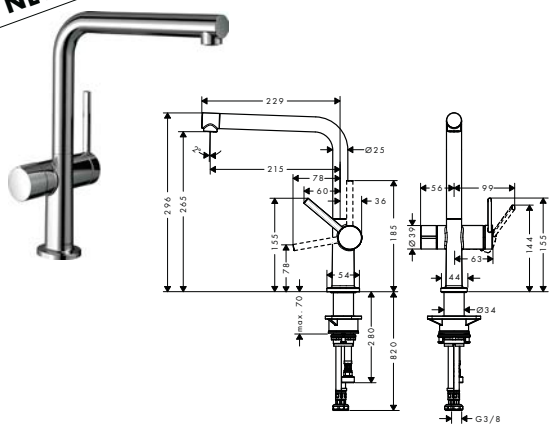

- ComfortZone 270
- swivel range adjustable in 4 steps 60°, 110°, 150° or 360°
- laminar spray
- with integrated shut-off valve
- connection dimension: DN15
- maximum flow rate at 3 bar: 8 l/ min
- ceramic cartridge
- connection type: G ⅜ connections
- suitable for continuous flow water heaters

Cento XXL

	finish	code no.	Euro
Cento Single lever kitchen mixer XXL, Semi-Pro, 2jet	Chrome	14806000	362.10

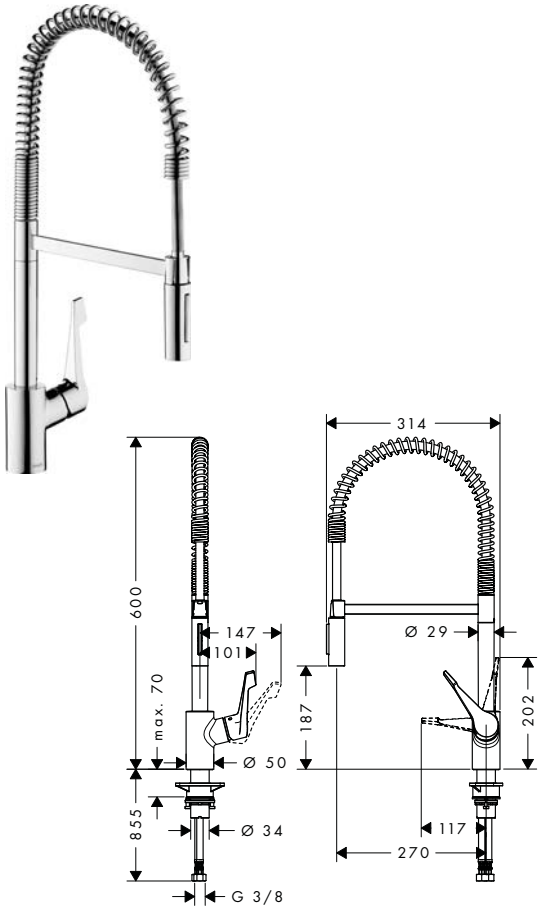

- swivel range 360°
- normal and spray jet
- lockable shower spray, spray returns through pressing spray diverter
- connection dimension: DN15
- maximum flow rate at 3 bar: 11 l/ min
- ceramic cartridge with Eco handle position for a reduced flowrate by up to 50%
- connection type: G ⅜ connections
- integrated non-return valve
- suitable for continuous flow water heaters

Measurements within scale drawings are in mm.

Technical specifications and units of measure are subject to change.

Focus M41

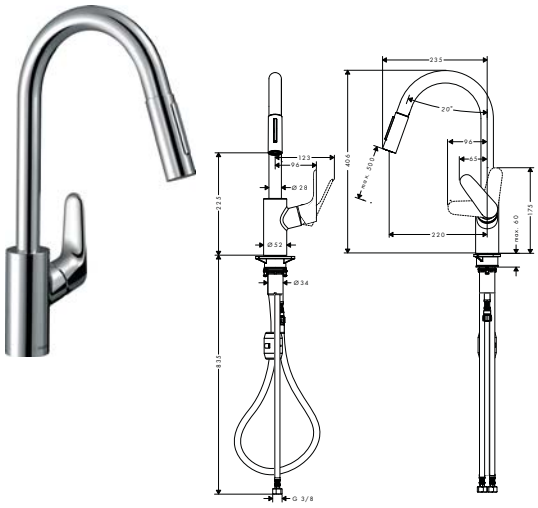

Focus M41 Single lever kitchen mixer 240, pull-out spray, 2jet

- ComfortZone 240
- swivel range adjustable in 2 steps to 110° or 150°
- laminar spray and shower spray
- lockable shower spray, spray returns through pressing spray diverter
- MagFit magnetic shower support
- quick connect hose
- connection dimension: DN15
- maximum flow rate at 3 bar: 9.5 l/ min
- ceramic cartridge
- connection type: G ⅜ connections
- integrated non-return valve
- suitable for continuous flow water heaters

Alternative products:

- **Focus M41** Single lever kitchen mixer 240, Eco, pull-out spray, 2jet

finish	code no.	Euro
Chrome	31815000	255.00
Matt Black	31815670	357.00
Stainless Steel Finish	31815800	331.70
Chrome	31833000	255.00

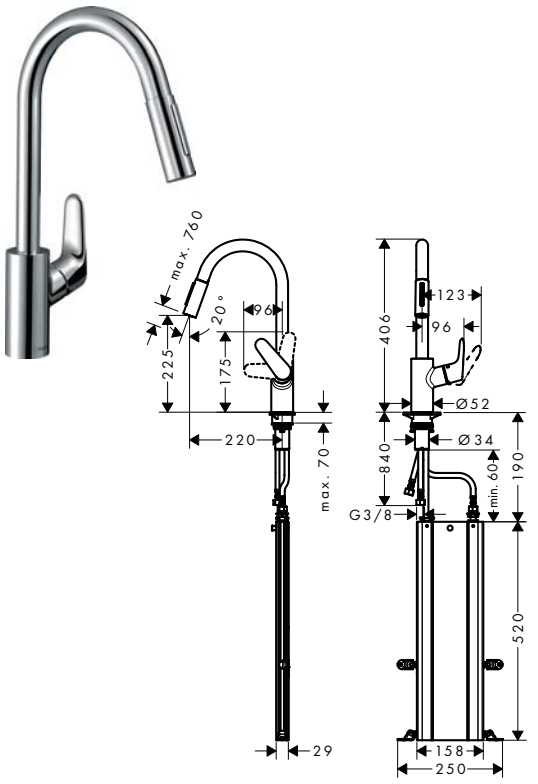

Focus M41 Single lever kitchen mixer 240, pull-out spray, 2jet, sBox

- consists of: single lever kitchen mixer, hose box
- ComfortZone 240
- swivel range adjustable in 2 steps to 110° or 150°
- laminar spray and shower spray
- lockable shower spray, spray returns through pressing spray diverter
- MagFit magnetic shower support
- connection dimension: DN15
- maximum flow rate at 3 bar: 9.5 l/ min
- ceramic cartridge
- connection type: G ⅜ connections
- integrated non-return valve
- suitable for continuous flow water heaters
- sBox for quiet, smooth and protected hose guidance in the cabinet, under the countertop, with extension length up to 76 cm

Alternative products:

- **Focus M41** Single lever kitchen mixer 240, Eco, pull-out spray, 2jet, sBox

finish	code no.	Euro
Chrome	73880000	304.10
Stainless Steel Finish	73880800	378.50
Chrome	73895000	304.10

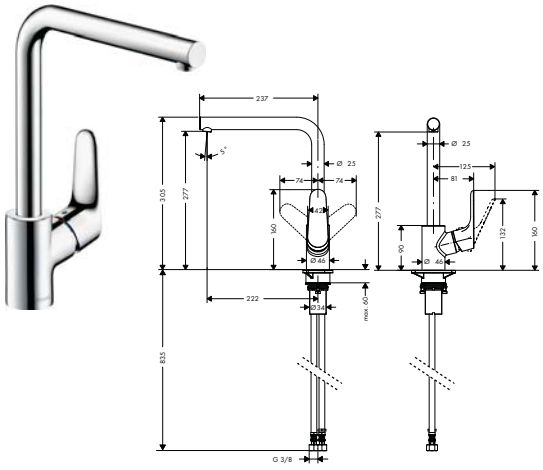

Focus M41 Single lever kitchen mixer 280, 1jet

- handle can be positioned on the right or left
- ComfortZone 280
- swivel range adjustable in 3 steps 110°, 150° or 360°
- normal spray
- connection dimension: DN15
- maximum flow rate at 3 bar: 12 l/ min
- ceramic cartridge
- connection type: G ⅜ connections
- suitable for continuous flow water heaters

Alternative products:

- **Focus M41** Single lever kitchen mixer 280, Eco, 1jet

finish	code no.	Euro
Chrome	31817000	196.70
Matt Black	31817670	275.40
Stainless Steel Finish	31817800	256.20
Chrome	31827000	196.70

Measurements within scale drawings are in mm.

Technical specifications and units of measure are subject to change.

	finish	code no.	Euro

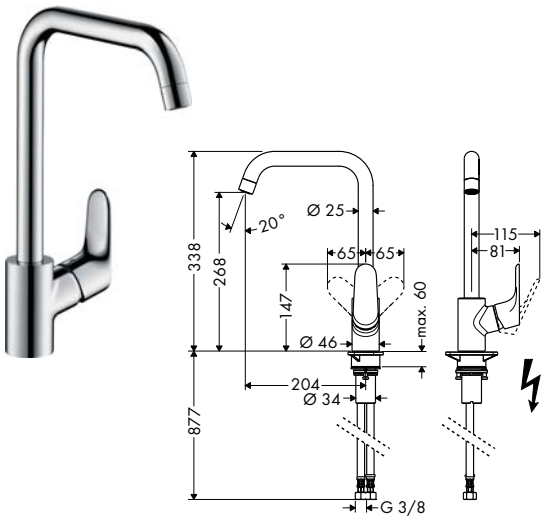

Focus M41 Single lever kitchen mixer 260, 1jet

- handle can be positioned on the right or left
- ComfortZone 260
- swivel range adjustable in 3 steps 110°, 150° or 360°
- normal spray
- connection dimension: DN15
- maximum flow rate at 3 bar: 12 l/min
- ceramic cartridge
- connection type: G ⅜ connections
- suitable for continuous flow water heaters

	finish	code no.	Euro
	Chrome	31820000	171.60
	Matt Black	31820670	240.20
	Stainless Steel Finish	31820800	223.80

Air Power · Quick Clean · Comfort Zone

Alternative products:

· **Focus M41** Single lever kitchen mixer 260, LowPressure/vented hot water cylinders, 1jet	Chrome	31822000	189.40
· **Focus M41** Single lever kitchen mixer 260, Eco, 1jet	Chrome	31821000	171.60
	Stainless Steel Finish	31821800	223.80

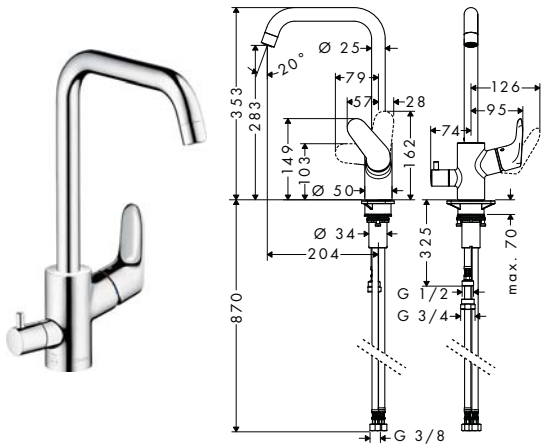

Focus M41 Single lever kitchen mixer 260, device shut-off valve, 1jet

- handle can be positioned on the right or left
- ComfortZone 260
- swivel range adjustable in 3 steps 110°, 150° or 360°
- normal spray
- with integrated shut-off valve
- connection dimension: DN15
- maximum flow rate at 3 bar: 12 l/min
- ceramic cartridge
- connection type: G ⅜ connections
- suitable for continuous flow water heaters

	Chrome	31823000	281.10

Air Power · Quick Clean · Comfort Zone



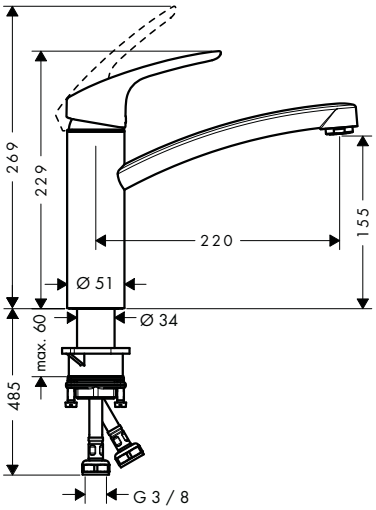

Focus M41 Single lever kitchen mixer 160, 1jet

- ComfortZone 160
- swivel range 360°
- normal spray
- connection dimension: DN15
- maximum flow rate at 3 bar: 12 l/min
- ceramic cartridge
- connection type: G ⅜ connections
- suitable for continuous flow water heaters

	finish	code no.	Euro
	Chrome	31806000	121.10
	Stainless Steel Finish	31806800	157.30

Air Power · Quick Clean · Comfort Zone

Alternative products:

· **Focus M41** Single lever kitchen mixer 160, CoolStart, EcoSmart, 1jet	Chrome	31816000	124.90
· **Focus M41** Single lever kitchen mixer 160, Eco, 1jet	Chrome	31826000	121.10
· **Focus M41** Single lever kitchen mixer 160, LowPressure/vented hot water cylinders, 1jet	Chrome	31804000	136.60

Measurements within scale drawings are in mm.

Technical specifications and units of measure are subject to change.

	finish	code no.	Euro



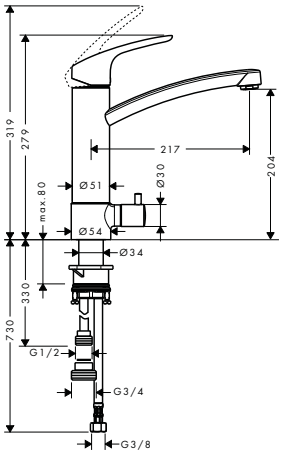

Focus M41 Single lever kitchen mixer 200, device shut-off valve, 1jet

- ComfortZone 200
- swivel range 120°
- with integrated shut-off valve
- connection dimension: DN15
- maximum flow rate at 3 bar: 12 l/min
- ceramic cartridge
- connection type: G ⅜ connections
- suitable for continuous flow water heaters

Chrome 31803000 281.00

Air Power · Quick Clean · Comfort Zone



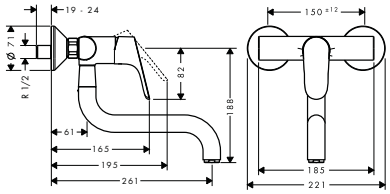

Focus M41 Single lever kitchen mixer, wall-mounted lowspout, 1jet

- swivel range 180°
- normal spray
- centre distance 150 ± 12 mm
- connection dimension: DN15
- maximum flow rate at 3 bar: 12 l/min
- ceramic cartridge
- connection type: s-shaped connections
- suitable for continuous flow water heaters

Chrome 31825000 163.30

Air Power · Quick Clean



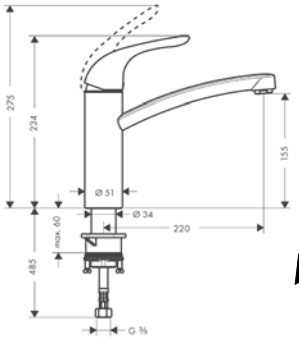

Focus M41 Single lever kitchen mixer E, 160, 1jet

- ComfortZone 160
- swivel range 360°
- normal spray
- connection dimension: DN15
- maximum flow rate at 3 bar: 12 l/min
- ceramic cartridge
- connection type: G ⅜ connections
- suitable for continuous flow water heaters

Chrome 31780000 127.20

Air Power · Quick Clean · Comfort Zone

Alternative products:

- **Focus M41** Single lever kitchen mixer E, 160, LowPressure/vented hot water cylinders, 1jet

Chrome 31784000 149.30

Focus M42



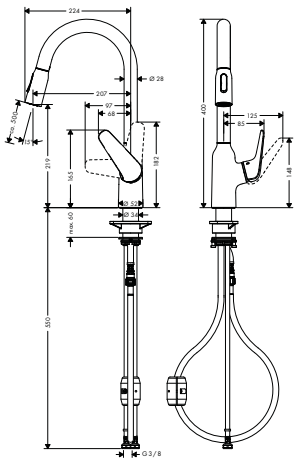

Focus M42 Single lever kitchen mixer 220, pull-out spray, 2jet

- ComfortZone 220
- swivel range 360°
- laminar spray and shower spray
- lockable shower spray, spray returns through pressing spray diverter and spray returns automatically through handle closing
- MagFit magnetic shower support
- quick connect hose
- connection dimension: DN15
- maximum flow rate at 3 bar: 8 l/min
- ceramic cartridge
- connection type: G ⅜ connections
- integrated non-return valve
- suitable for continuous flow water heaters

Chrome 71800000 269.70
Stainless Steel Finish 71800800 350.60

Quick Clean · Comfort Zone

Measurements within scale drawings are in mm.

Technical specifications and units of measure are subject to change.

	finish	code no.	Euro

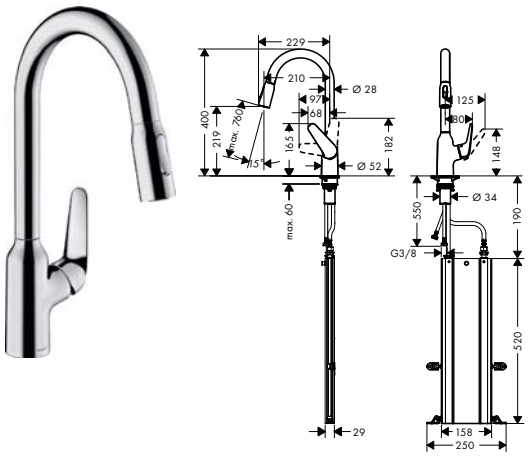

Focus M42 Single lever kitchen mixer 220, pull-out spray, 2jet, sBox

- consists of: single lever kitchen mixer, hose box
- ComfortZone 220
- swivel range 360°
- laminar spray and shower spray
- lockable shower spray, spray returns through pressing spray diverter and spray returns automatically through handle closing
- MagFit magnetic shower support
- connection dimension: DN15
- maximum flow rate at 3 bar: 8 l/min
- ceramic cartridge
- connection type: G ⅜ connections
- integrated non-return valve
- suitable for continuous flow water heaters
- sBox for quiet, smooth and protected hose guidance in the cabinet, under the countertop, with extension length up to 76 cm

Chrome	71820000	323.70
Stainless Steel Finish	71820800	404.60

Quick Clean · Comfort Zone

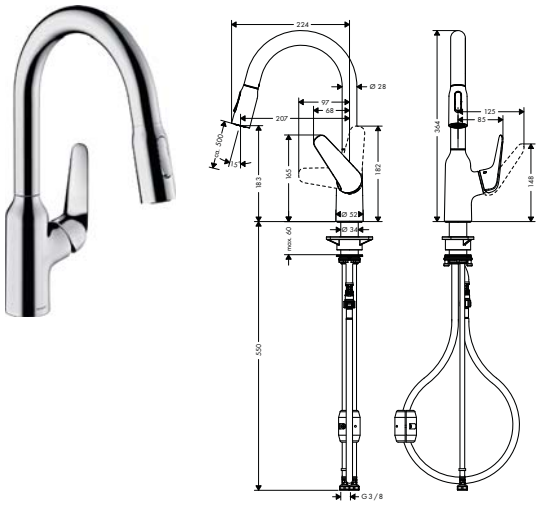

Focus M42 Single lever kitchen mixer 180, pull-out spray, 2jet

- ComfortZone 180
- swivel range 360°
- laminar spray and shower spray
- lockable shower spray, spray returns through pressing spray diverter and spray returns automatically through handle closing
- MagFit magnetic shower support
- quick connect hose
- connection dimension: DN15
- maximum flow rate at 3 bar: 8 l/min
- ceramic cartridge
- connection type: G ⅜ connections
- integrated non-return valve
- suitable for continuous flow water heaters

Chrome	71801000	238.60
Stainless Steel Finish	71801800	310.20

Quick Clean · Comfort Zone

Alternative products:

- **Focus M42** Single lever kitchen mixer 180, Eco, pull-out spray, 2jet

Chrome	71862000	238.60

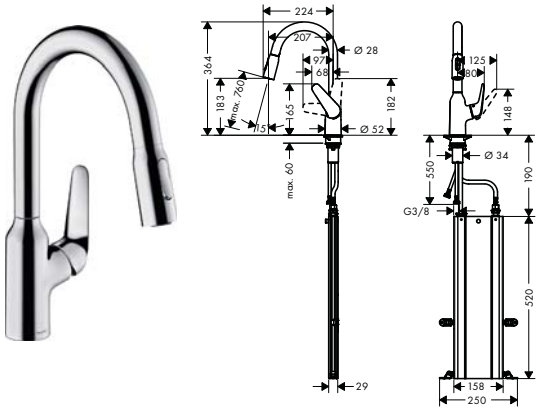

Focus M42 Single lever kitchen mixer 180, pull-out spray, 2jet, sBox

- consists of: single lever kitchen mixer, hose box
- ComfortZone 180
- swivel range 360°
- laminar spray and shower spray
- lockable shower spray, spray returns through pressing spray diverter and spray returns automatically through handle closing
- MagFit magnetic shower support
- connection dimension: DN15
- maximum flow rate at 3 bar: 8 l/min
- ceramic cartridge
- connection type: G ⅜ connections
- integrated non-return valve
- suitable for continuous flow water heaters
- sBox for quiet, smooth and protected hose guidance in the cabinet, under the countertop, with extension length up to 76 cm

Chrome	71821000	292.60
Stainless Steel Finish	71821800	364.10

Quick Clean · Comfort Zone

Measurements within scale drawings are in mm.

Technical specifications and units of measure are subject to change.

	finish	code no.	Euro

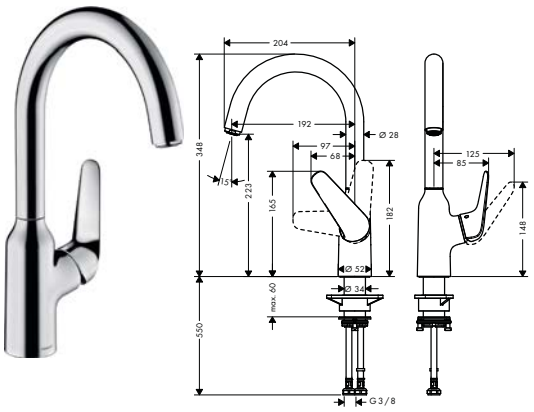

Focus M42 Single lever kitchen mixer 220, 1jet

- ComfortZone 220
- swivel range 360°
- normal spray
- connection dimension: DN15
- maximum flow rate at 3 bar: 10 l/min
- ceramic cartridge
- connection type: G ⅜ connections
- suitable for continuous flow water heaters

Chrome 71802000 171.20
Stainless Steel Finish 71802800 222.60

Air Power · Quick Clean · Comfort Zone



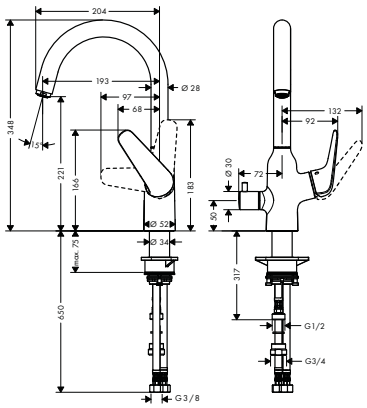

Focus M42 Single lever kitchen mixer 220, device shut-off valve, 1jet

- ComfortZone 220
- swivel range adjustable in 2 steps 110° or 360°
- normal spray
- with integrated shut-off valve
- connection dimension: DN15
- maximum flow rate at 3 bar: 10 l/min
- ceramic cartridge
- connection type: G ⅜ connections
- suitable for continuous flow water heaters

Chrome 71803000 269.70

Air Power · Quick Clean · Comfort Zone



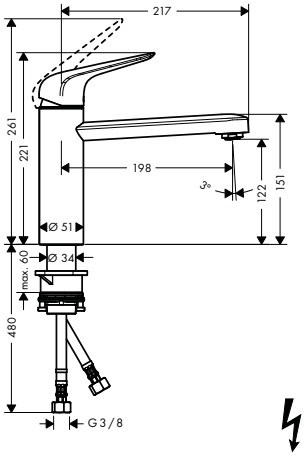

Focus M42 Single lever kitchen mixer 120, 1jet

- ComfortZone 120
- swivel range 360°
- normal spray
- connection dimension: DN15
- maximum flow rate at 3 bar: 12 l/min
- ceramic cartridge
- connection type: G ⅜ connections
- suitable for continuous flow water heaters

Chrome 71806000 124.50
Stainless Steel Finish 71806800 161.80

Air Power · Quick Clean · Comfort Zone

Alternative products:

- **Focus M42** Single lever kitchen mixer 120, CoolStart, EcoSmart, 1jet — Chrome 71805000 124.50
- **Focus M42** Single lever kitchen mixer 120, CoolStart, Eco, 1jet — Chrome 71864000 124.50
- **Focus M42** Single lever kitchen mixer 120, LowPressure/vented hot water cylinders, 1jet — Chrome 71804000 134.80

Measurements within scale drawings are in mm.

Technical specifications and units of measure are subject to change.

	finish	code no.	Euro

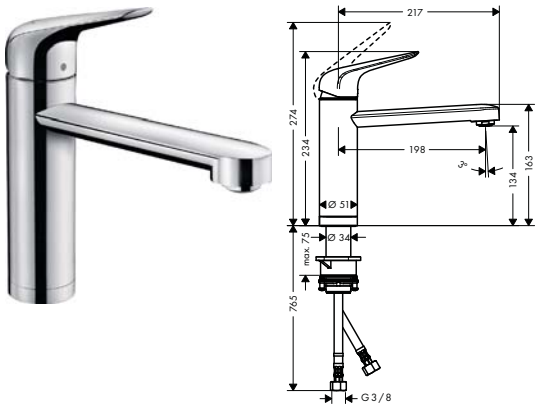

Focus M42 Single lever kitchen mixer 120, installation in front of a window, 1jet

- ComfortZone 120
- swivel range 360°
- installation in front of the window, can be laid flat, base height 51 mm
- normal spray
- connection dimension: DN15
- maximum flow rate at 3 bar: 12 l/min
- ceramic cartridge
- connection type: G ⅜ connections
- suitable for continuous flow water heaters

Chrome — 71807000 — 155.60

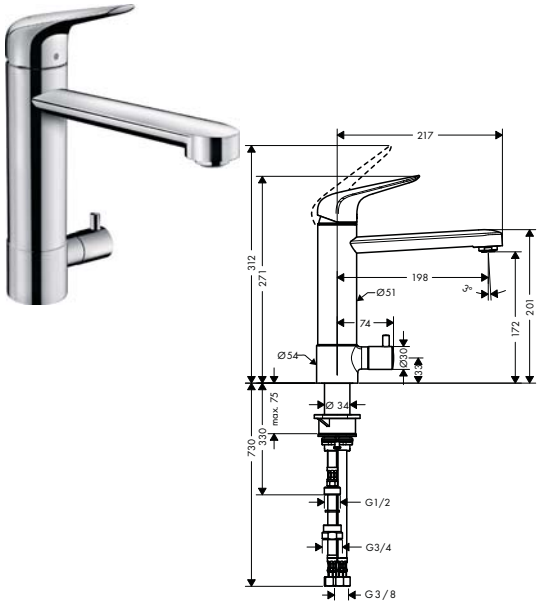

Focus M42 Single lever kitchen mixer 180, device shut-off valve, 1jet

- ComfortZone 180
- swivel range adjustable in 2 steps 120° or 360°
- normal spray
- with integrated shut-off valve
- connection dimension: DN15
- maximum flow rate at 3 bar: 12 l/min
- ceramic cartridge
- connection type: G ⅜ connections
- suitable for continuous flow water heaters

Chrome — 71813000 — 254.20

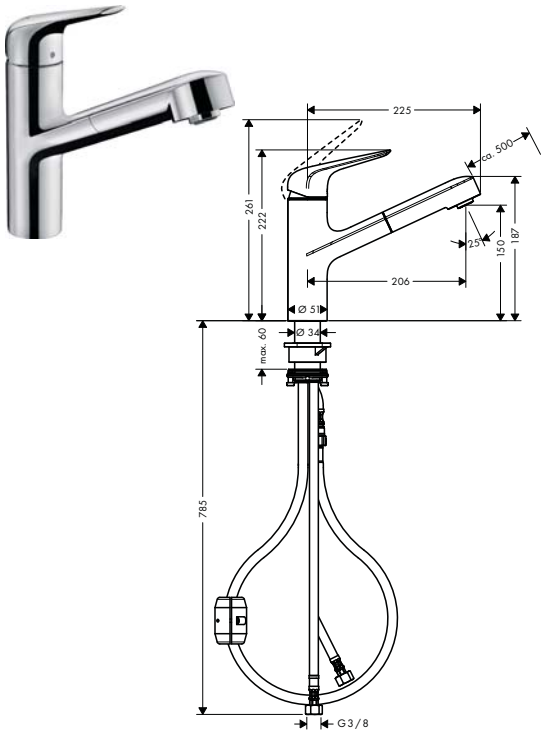

Focus M42 Single lever kitchen mixer 150, pull-out spout, 1jet

- ComfortZone 150
- swivel range 120°
- normal spray
- MagFit magnetic shower support
- quick connect hose
- connection dimension: DN15
- maximum flow rate at 3 bar: 10 l/min
- ceramic cartridge
- connection type: G ⅜ connections
- integrated non-return valve
- suitable for continuous flow water heaters

Chrome — 71814000 — 171.20
Stainless Steel Finish — 71814800 — 222.60

Alternative products:

- **Focus M42** Single lever kitchen mixer 150, Eco, pull-out spout, 1jet

Chrome — 71865000 — 171.20

Measurements within scale drawings are in mm.

Technical specifications and units of measure are subject to change.

	finish	code no.	Euro
Focus M42 Single lever kitchen mixer 150, pull-out spout, 1jet, sBox	Chrome	71829000	225.10
	Stainless Steel Finish	71829800	276.50

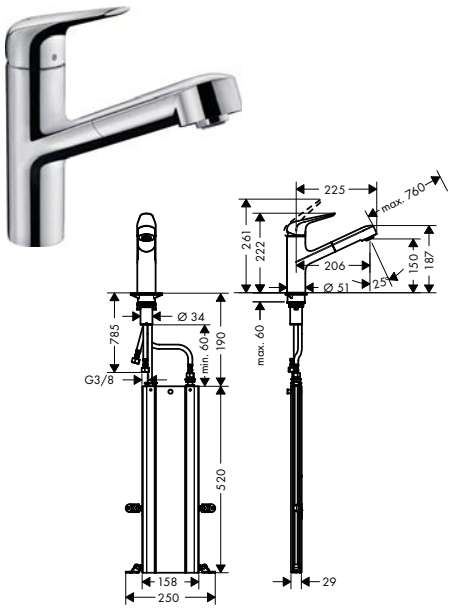

- consists of: single lever kitchen mixer, hose box
- ComfortZone 150
- swivel range 120°
- normal spray
- MagFit magnetic shower support
- connection dimension: DN15
- maximum flow rate at 3 bar: 10 l/min
- ceramic cartridge
- connection type: G ⅜ connections
- integrated non-return valve
- suitable for continuous flow water heaters
- sBox for quiet, smooth and protected hose guidance in the cabinet, under the countertop, with extension length up to 76 cm

Focus M42 Single lever kitchen mixer 100, 1jet	Chrome	71808000	103.70
	Stainless Steel Finish	71808800	134.80

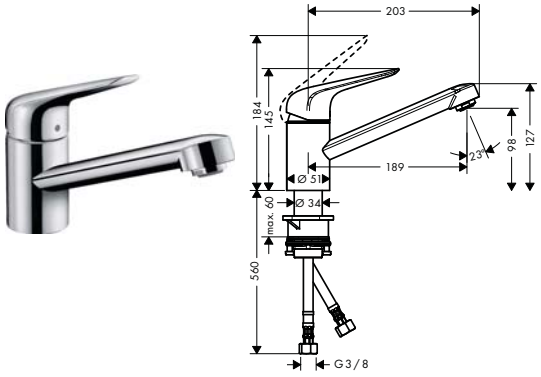

- ComfortZone 100
- swivel range 360°
- normal spray
- connection dimension: DN15
- maximum flow rate at 3 bar: 12 l/min
- ceramic cartridge
- connection type: G ⅜ connections
- suitable for continuous flow water heaters

Alternative products:

· **Focus M42** Single lever kitchen mixer 100, CoolStart, EcoSmart, 1jet	Chrome	71809000	103.70
· **Focus M42** Single lever kitchen mixer 100, CoolStart, Eco, 1jet	Chrome	71866000	103.70

Logis M31

Logis M31 Single lever kitchen mixer 260, 1jet	Chrome	71835000	139.00

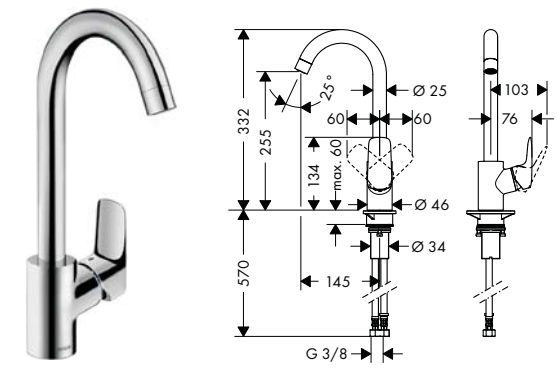

- handle can be positioned on the right or left
- ComfortZone 260
- swivel range adjustable in 3 steps 110°, 150° or 360°
- normal spray
- connection dimension: DN15
- maximum flow rate at 3 bar: 12 l/min
- ceramic cartridge
- connection type: G ⅜ connections
- suitable for continuous flow water heaters

Alternative products:

· **Logis M31** Single lever kitchen mixer 260, Eco, 1jet	Chrome	71861000	139.00

Measurements within scale drawings are in mm.

Technical specifications and units of measure are subject to change.

	finish	code no.	Euro



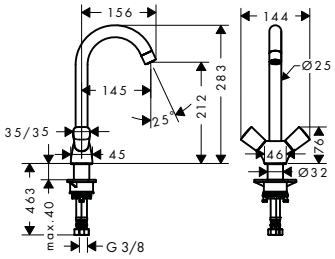

Logis M31 2-handle kitchen mixer 220, 1jet

finish: Chrome | code no.: 71280000 | Euro: 121.90

Air Power | Comfort Zone

- ComfortZone 220
- swivel range adjustable in 3 steps 110°, 150° or 360°
- normal spray
- connection dimension: DN15
- maximum flow rate at 3 bar: 12 l/min
- ceramic valves hot/ cold 90°
- connection type: G ⅜ connections
- suitable for continuous flow water heaters



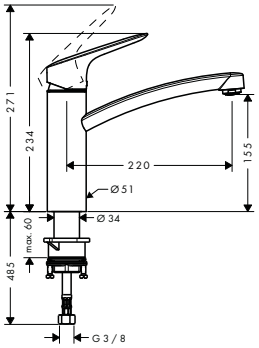

Logis M31 Single lever kitchen mixer 160, 1jet

finish: Chrome | code no.: 71832000 | Euro: 107.70

Air Power | Comfort Zone

- ComfortZone 160
- swivel range 360°
- normal spray
- connection dimension: DN15
- maximum flow rate at 3 bar: 12 l/min
- ceramic cartridge
- connection type: G ⅜ connections
- suitable for continuous flow water heaters

Alternative products:

- **Logis M31** Single lever kitchen mixer 160, installation in front of a window, 1jet — Chrome — 71833000 — 138.00
- **Logis M31** Single lever kitchen mixer 160, Eco, 1jet — Chrome — 71860000 — 107.70



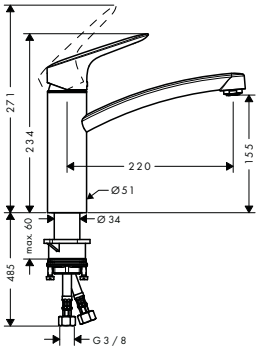

Logis M31 Single lever kitchen mixer 160, CoolStart, EcoSmart, 1jet

finish: Chrome | code no.: 71839000 | Euro: 107.70

Air Power | Eco Smart | Comfort Zone | Cool Start

- ComfortZone 160
- cold water in middle position
- swivel range 360°
- normal spray
- connection dimension: DN15
- maximum flow rate at 3 bar: 12 l/min
- ceramic cartridge
- connection type: G ⅜ connections
- suitable for continuous flow water heaters



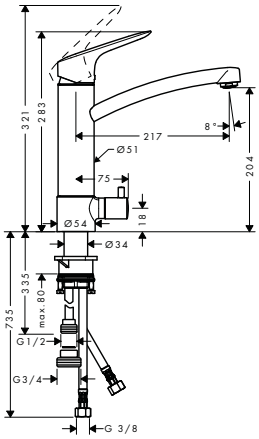

Logis M31 Single lever kitchen mixer 220, device shut-off valve, 1jet

finish: Chrome | code no.: 71834000 | Euro: 247.70

Air Power | Comfort Zone

- ComfortZone 220
- swivel range 120°
- normal spray
- connection dimension: DN15
- maximum flow rate at 3 bar: 12 l/min
- ceramic cartridge
- connection type: G ⅜ connections
- suitable for continuous flow water heaters

Measurements within scale drawings are in mm.

Technical specifications and units of measure are subject to change.

	finish	code no.	Euro



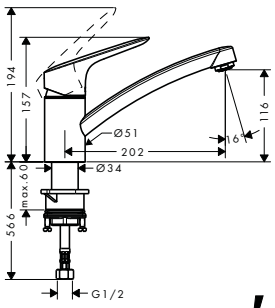

Logis M31 Single lever kitchen mixer 120, 1jet

- ComfortZone 120
- swivel range 360°
- normal spray
- connection dimension: DN15
- maximum flow rate at 3 bar: 12 l/min
- ceramic cartridge
- connection type: G ⅜ connections
- suitable for continuous flow water heaters

Air Power · Comfort Zone

Chrome 71830000 94.70

Alternative products:

- **Logis M31** Single lever kitchen mixer 120, LowPressure/vented hot water cylinders, 1jet

Chrome 71831000 113.20



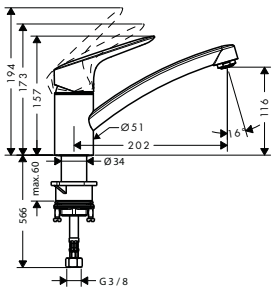

Logis M31 Single lever kitchen mixer 120, CoolStart, EcoSmart, 1jet

- ComfortZone 120
- cold water in middle position
- swivel range 360°
- normal spray
- connection dimension: DN15
- maximum flow rate at 3 bar: 12 l/min
- ceramic cartridge
- connection type: G ⅜ connections
- suitable for continuous flow water heaters

Air Power · Eco Smart · Comfort Zone · Cool Start

Chrome 71837000 94.70



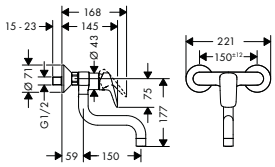

Logis M31 Single lever kitchen mixer, wall-mounted lowspout, 1jet

- swivel range 220°
- normal spray
- centre distance 150 ± 12 mm
- connection dimension: DN15
- maximum flow rate at 3 bar: 13 l/min
- ceramic cartridge
- connection type: s-shaped connections
- suitable for continuous flow water heaters

Air Power

Chrome 71836000 139.00

Logis M32



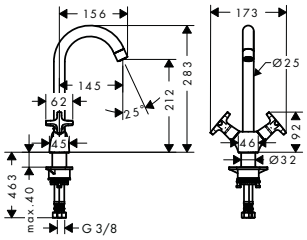

Logis M32 2-handle kitchen mixer 220, 1jet

- ComfortZone 220
- swivel range adjustable in 3 steps 110°, 150° or 360°
- normal spray
- connection dimension: DN15
- maximum flow rate at 3 bar: 12 l/min
- ceramic valves 90°
- connection type: G ⅜ connections
- suitable for continuous flow water heaters

Air Power · Comfort Zone

Chrome 71285000 155.20

Alternative products:

- **Logis M32** 2-handle kitchen mixer 220, Eco, 1jet

Chrome 71283000 155.20

Measurements within scale drawings are in mm.

Technical specifications and units of measure are subject to change.

	finish	code no.	Euro



Logis M32 2-handle kitchen mixer, wall-mounted, highspout, 1jet

Chrome | 71286000 | 182.90

Air Power

- swivel range 360°
- normal spray
- centre distance 150 ± 12 mm
- connection dimension: DN15
- maximum flow rate at 3 bar: 12 l/min
- ceramic valves 90°
- connection type: s-shaped connections
- suitable for continuous flow water heaters

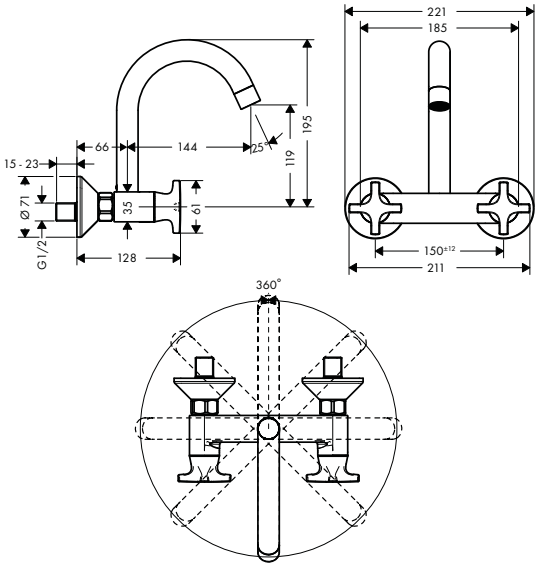

Alternative products:

- **Logis M32** 2-handle kitchen mixer, Eco, wall-mounted highspout, 1jet — Chrome | 71284000 | 182.90



Logis M32 2-handle kitchen mixer, wall-mounted lowspout, 1jet

Chrome | 71287000 | 182.90

Air Power

- normal spray
- centre distance 150 ± 12 mm
- connection dimension: DN15
- maximum flow rate at 3 bar: 12 l/min
- ceramic valves 90°
- connection type: s-shaped connections
- suitable for continuous flow water heaters

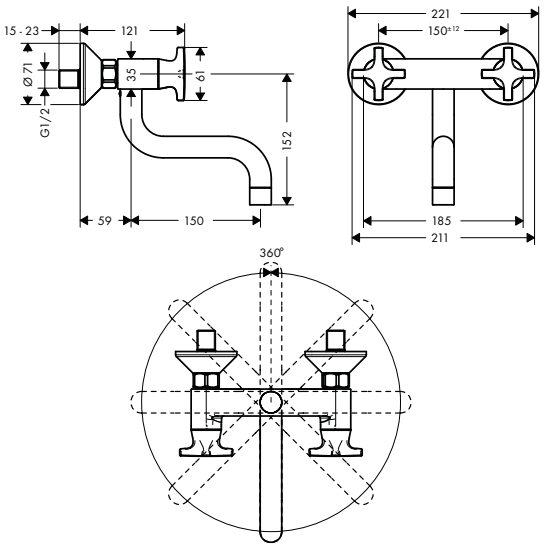

Measurements within scale drawings are in mm.

Technical specifications and units of measure are subject to change.

hansgrohe Sink combis

Stainless steel sink combinations at a glance

sink cabinet		**60 cm**	
			
Versions	Standard with sBox	43201, -000, -800	43205, -000, -800 43230, -000, -800
Installation options	Surface-mounted installation	■	■
	Flush-mounted installation	■	■
	Substructure-mounted installation		
Features	Kitchen mixer	73818, -000, -800	73818, -000, -800
	Select	■	■
	Change spray type	■	■
	With pull-out function	■	■
	With swivel spout	■	■

■ Available

	80 cm		**90 cm**
			
	43202, -000, -800	43206, -000, -800	43203 -000, -800
	■	■	■
	■	■	■
	73818, -000, -800	73818, -000, -800	73818, -000, -800
	■	■	■
	■	■	■
	■	■	■
	■	■	■

hansgrohe Sink combis

SilicaTec sink combinations at a glance

	sink cabinet	**60 cm**	
			
Versions	Standard with sBox	43217 -000	43219, -000 43228, -000
Installation options	Surface-mounted installation	■	■
	Flush-mounted installation		
	Substructure-mounted installation		
Features	Kitchen mixer	73818, -000	73818, -000
	Select	■	■
	Change spray type	■	■
	With pull-out function	■	■
	With swivel spout	■	■

■ Available

	80 cm		**90 cm**
			
	43218 -000	43220, -000	43221 -000
	■	■	■
	73818, -000	73818, -000	73818, -000
	■	■	■
	■	■	■
	■	■	■
	■	■	■

Stainless steel sink combis



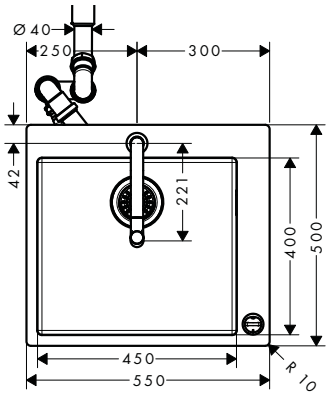

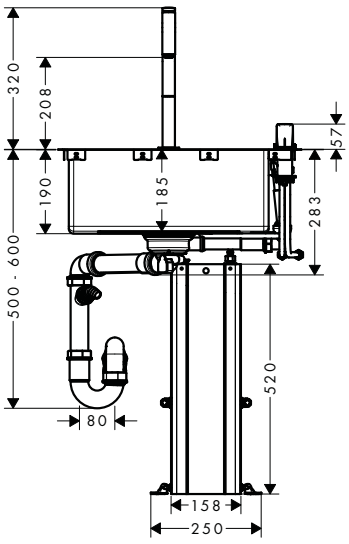

C71-F450-06 Sink combi 450 Select

finish	code no.	Euro
Chrome	43201000	1,053.70
Stainless Steel Finish	43201800	1,211.80

Select · Air Power · Quick Clean · Comfort Zone

- consists of: built-in sink, 2-hole single lever kitchen mixer, control unit, hose box, manual waste and overflow set
- material sink: stainless steel
- number of bowls: 1 main bowl
- tap hole and hole for control unit are pre-drilled
- sink depth: 190 mm
- cut-out dimensions: 530 x 480 mm
- cabinet size: 60 cm
- type of installation: flat on the countertop (self-rimming) or flush-mount installation
- position overflow: on the right side of the bowl
- tap ledge reinforcing for a tight and stable seating of the kitchen mixer
- corner radius: 10 mm
- connection type: G ⅜ connections
- connection dimension: DN15
- flow rate 8 l/ min
- suitable for continuous flow water heaters
- ceramic cartridge
- MagFit magnetic shower support
- integrated non-return valve
- swivel range 150°
- normal spray
- ComfortZone 200
- Select button for a comfortable start/stop of the water flow
- sBox for quiet, smooth and protected hose guidance in the cabinet, under the countertop, with extension length up to 76 cm

Consisting of:

- 2-hole single lever kitchen mixer 200, pull-out spray, 2jet, sBox (# 73818XXX)
- D14-10 Manual waste and overflow set for single bowl (# 43921800)

Optional parts:

· F15 Cutting board walnut		40960000	124.50
· F16 Cutting board oak		40961000	93.40
· F17 Mobile drainboard	Stainless Steel	40962800	81.00
· F14 Multifunctional strainer	Matt Black	40963000	20.30

Measurements within scale drawings are in mm.

Technical specifications and units of measure are subject to change.



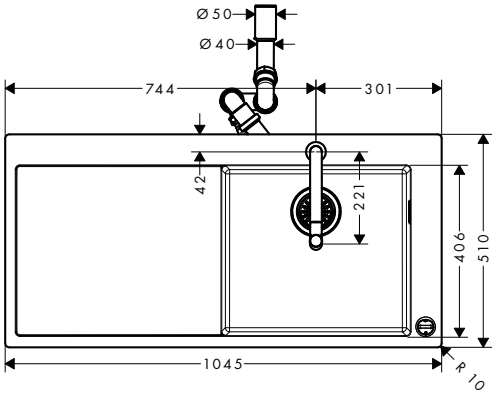

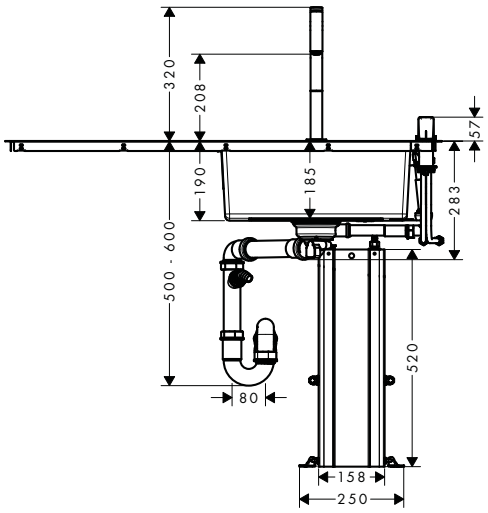

C71-F450-07 Sink combi 450
Select with drainboard left

- consists of: built-in sink, 2-hole single lever kitchen mixer, control unit, hose box, manual waste and overflow set
- for installation in worktops from 25 mm
- material sink: stainless steel
- number of bowls: 1 main bowl
- with drainage
- tap hole and hole for control unit are pre-drilled
- orientation: bowl right
- sink depth: 190 mm
- cut-out dimensions: 1025 x 490 mm
- cabinet size: 60 cm
- type of installation: flat on the countertop (self-rimming) or flush-mount installation
- position overflow: on the right side of the bowl
- tap ledge reinforcing for a tight and stable seating of the kitchen mixer
- corner radius: 10 mm
- connection type: G ⅜ connections
- connection dimension: DN15
- flow rate 8 l/ min
- suitable for continuous flow water heaters
- ceramic cartridge
- MagFit magnetic shower support
- integrated non-return valve
- swivel range 150°
- normal spray
- ComfortZone 200
- Select button for a comfortable start/stop of the water flow
- sBox for quiet, smooth and protected hose guidance in the cabinet, under the countertop, with extension length up to 76 cm

Consisting of:

- 2-hole single lever kitchen mixer 200, pull-out spray, 2jet, sBox (# 73818XXX)
- D14-10 Manual waste and overflow set for single bowl (# 43921800)

Optional parts:

- F14 Multifunctional strainer

finish	code no.	Euro
Chrome	43205000	1,331.20
Stainless Steel Finish	43205800	1,484.80
Matt Black	40963000	20.30

Select · Air Power · Quick Clean · Comfort Zone

Measurements within scale drawings are in mm.

Technical specifications and units of measure are subject to change.



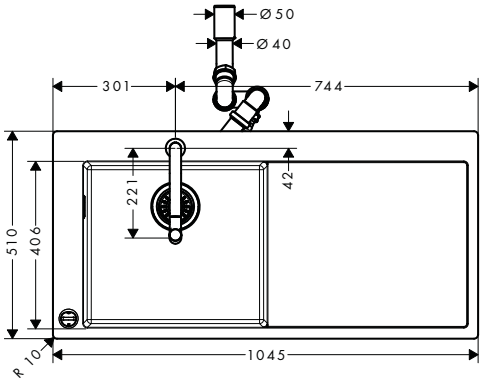

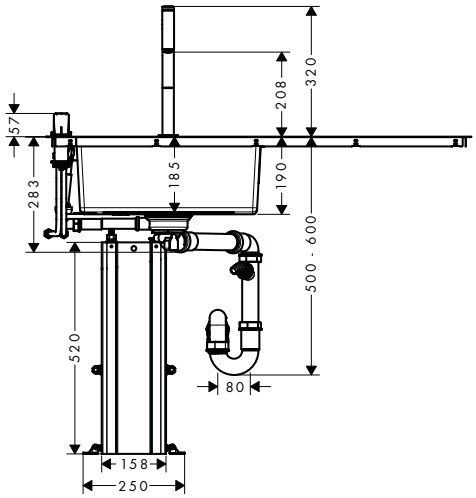

C71-F450-12 Sink combi 450 Select with drainboard right

- consists of: built-in sink, 2-hole single lever kitchen mixer, control unit, hose box, manual waste and overflow set
- for installation in worktops from 25 mm
- material sink: stainless steel
- number of bowls: 1 main bowl
- with drainage
- tap hole and hole for control unit are pre-drilled
- orientation: bowl left
- sink depth: 190 mm
- cut-out dimensions: 1025 x 490 mm
- cabinet size: 60 cm
- type of installation: flat on the countertop (self-rimming) or flush-mount installation
- position overflow: on the left side of the bowl
- tap ledge reinforcing for a tight and stable seating of the kitchen mixer
- corner radius: 10 mm
- connection type: G ⅜ connections
- connection dimension: DN15
- flow rate 8 l/ min
- suitable for continuous flow water heaters
- ceramic cartridge
- MagFit magnetic shower support
- integrated non-return valve
- swivel range 150°
- normal spray
- ComfortZone 200
- Select button for a comfortable start/stop of the water flow
- sBox for quiet, smooth and protected hose guidance in the cabinet, under the countertop, with extension length up to 76 cm

Consisting of:

- 2-hole single lever kitchen mixer 200, pull-out spray, 2jet, sBox (# 73818XXX)
- D14-10 Manual waste and overflow set for single bowl (# 43921800)

Optional parts:

- F14 Multifunctional strainer

finish	code no.	Euro
Chrome	43230000	1,331.20
Stainless Steel Finish	43230800	1,484.80
Matt Black	40963000	20.30

Select · Air Power · Quick Clean · Comfort Zone

Measurements within scale drawings are in mm.

Technical specifications and units of measure are subject to change.



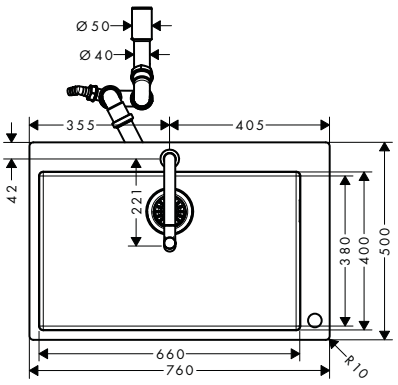

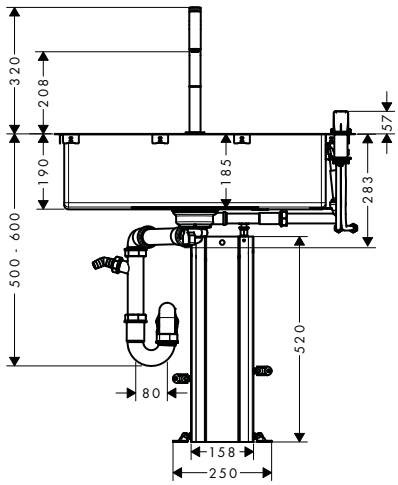

C71-F660-08 Sink combi 660 Select

- consists of: built-in sink, 2-hole single lever kitchen mixer, control unit, hose box, manual waste and overflow set
- material sink: stainless steel
- number of bowls: 1 main bowl
- tap hole and hole for control unit are pre-drilled
- sink depth: 190 mm
- cut-out dimensions: 740 x 480 mm
- cabinet size: 80 cm
- type of installation: flat on the countertop (self-rimming) or flush-mount installation
- position overflow: on the right side of the bowl
- tap ledge reinforcing for a tight and stable seating of the kitchen mixer
- corner radius: 10 mm
- connection type: G ⅜ connections
- connection dimension: DN15
- flow rate 8 l/ min
- suitable for continuous flow water heaters
- ceramic cartridge
- MagFit magnetic shower support
- integrated non-return valve
- swivel range 150°
- normal spray
- ComfortZone 200
- Select button for a comfortable start/stop of the water flow
- sBox for quiet, smooth and protected hose guidance in the cabinet, under the countertop, with extension length up to 76 cm

Consisting of:

- 2-hole single lever kitchen mixer 200, pull-out spray, 2jet, sBox (# 73818XXX)
- D14-10 Manual waste and overflow set for single bowl (# 43921800)

Optional parts:

- F15 Cutting board walnut
- F16 Cutting board oak
- F17 Mobile drainboard
- F14 Multifunctional strainer

finish	code no.	Euro
Chrome	43202000	1,138.00
Stainless Steel Finish	43202800	1,296.10
	40960000	124.50
	40961000	93.40
Stainless Steel	40962800	81.00
Matt Black	40963000	20.30

Select · Air Power · Quick Clean · Comfort Zone

Measurements within scale drawings are in mm.

Technical specifications and units of measure are subject to change.



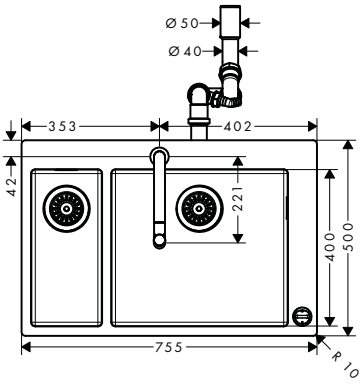

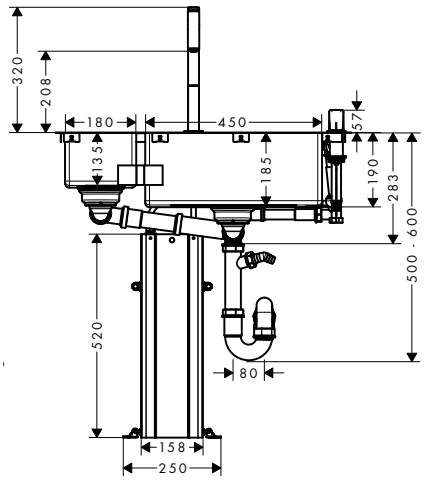

C71-F655-09 Sink combi 180/450 Select

- consists of: built-in sink, 2-hole single lever kitchen mixer, control unit, hose box, manual waste and overflow set
- material sink: stainless steel
- number of bowls: 1 main bowl and 1 additional bowl
- tap hole and hole for control unit are pre-drilled
- sink depth: 190 mm
- cut-out dimensions: 735 x 480 mm
- cabinet size: 80 cm
- type of installation: flat on the countertop (self-rimming) or flush-mount installation
- position overflow: on the right side of the main bowl
- tap ledge reinforcing for a tight and stable seating of the kitchen mixer
- corner radius: 10 mm
- connection type: G ⅜ connections
- connection dimension: DN15
- flow rate 8 l/ min
- suitable for continuous flow water heaters
- ceramic cartridge
- MagFit magnetic shower support
- integrated non-return valve
- swivel range 150°
- normal spray
- ComfortZone 200
- Select button for a comfortable start/stop of the water flow
- sBox for quiet, smooth and protected hose guidance in the cabinet, under the countertop, with extension length up to 76 cm

Consisting of:

- 2-hole single lever kitchen mixer 200, pull-out spray, 2jet, sBox (# 73818XXX)
- D15-10 Manual waste and overflow set for double bowl (# 43922800)

Optional parts:

- F15 Cutting board walnut
- F16 Cutting board oak
- F17 Mobile drainboard
- F14 Multifunctional strainer

finish	code no.	Euro
Chrome	43206000	1,475.20
Stainless Steel Finish	43206800	1,633.30
	40960000	124.50
	40961000	93.40
Stainless Steel	40962800	81.00
Matt Black	40963000	20.30

Select · Air Power · Quick Clean · Comfort Zone

Measurements within scale drawings are in mm.

Technical specifications and units of measure are subject to change.



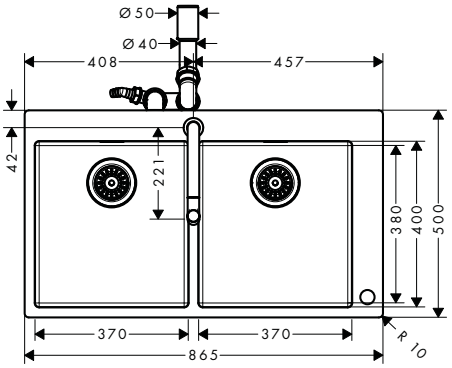

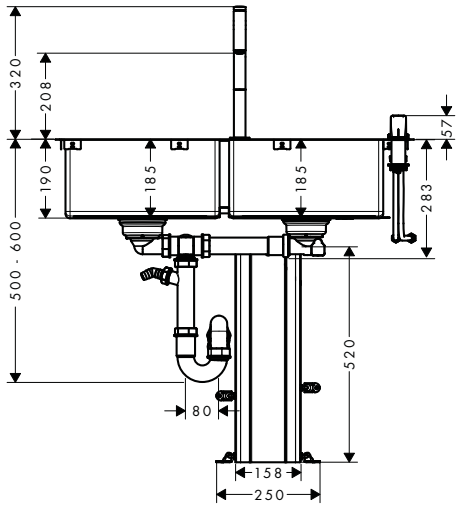

C71-F765-10 Sink combi 370/370 Select

- consists of: built-in sink, 2-hole single lever kitchen mixer, control unit, hose box, manual waste and overflow set
- material sink: stainless steel
- number of bowls: 2 main bowls
- tap hole and hole for control unit are pre-drilled
- sink depth: 190 mm
- cut-out dimensions: 840 x 480 mm
- cabinet size: 90 cm
- type of installation: flat on the countertop (self-rimming) or flush-mount installation
- tap ledge reinforcing for a tight and stable seating of the kitchen mixer
- corner radius: 10 mm
- connection type: G ⅜ connections
- connection dimension: DN15
- flow rate 8 l/ min
- suitable for continuous flow water heaters
- ceramic cartridge
- MagFit magnetic shower support
- integrated non-return valve
- swivel range 150°
- normal spray
- ComfortZone 200
- Select button for a comfortable start/stop of the water flow
- sBox for quiet, smooth and protected hose guidance in the cabinet, under the countertop, with extension length up to 76 cm

Consisting of:

- 2-hole single lever kitchen mixer 200, pull-out spray, 2jet, sBox (# 73818XXX)
- D15-10 Manual waste and overflow set for double bowl (# 43922800)

Optional parts:

- F15 Cutting board walnut
- F16 Cutting board oak
- F17 Mobile drainboard
- F14 Multifunctional strainer

finish	code no.	Euro
Chrome	43203000	1,580.50
Stainless Steel Finish	43203800	1,738.70
	40960000	124.50
	40961000	93.40
Stainless Steel	40962800	81.00
Matt Black	40963000	20.30

Select · Air Power · Quick Clean · Comfort Zone

Measurements within scale drawings are in mm.

SilicaTec sink combis



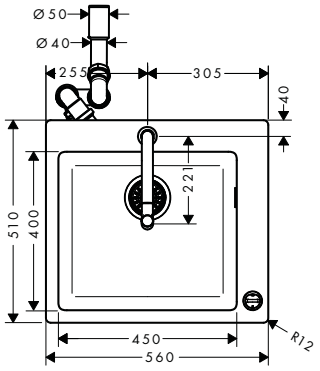

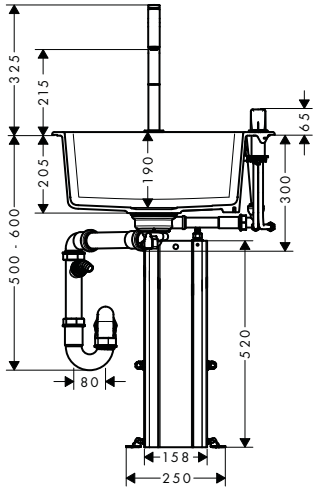

	finish	code no.	Euro
C51-F450-06 Sink combi 450 Select	Chrome	43217000	788.50

Select · Air Power · Quick Clean · Comfort Zone

- consists of: built-in sink, 2-hole single lever kitchen mixer, control unit, hose box, manual waste and overflow set
- material sink: SilicaTec
- number of bowls: 1 main bowl
- tap hole for drilling is predefined (see scale drawing)
- sink depth: 190 mm
- cut-out dimensions: 540 x 490 mm
- cabinet size: 60 cm
- type of installation: topmount
- position overflow: on the right side of the bowl
- connection type: G ⅜ connections
- connection dimension: DN15
- flow rate 8 l/ min
- suitable for continuous flow water heaters
- ceramic cartridge
- MagFit magnetic shower support
- integrated non-return valve
- swivel range 150°
- normal spray
- ComfortZone 200
- Select button for a comfortable start/stop of the water flow
- sBox for quiet, smooth and protected hose guidance in the cabinet, under the countertop, with extension length up to 76 cm

Consisting of:
- S510-F450 Built-in sink 450 (# 43312XXX)
- 2-hole single lever kitchen mixer 200, pull-out spray, 2jet, sBox (# 73818XXX)
- D16-10 Manual waste and overflow set for single bowl granite (# 43927000)

Optional parts:

· F15 Cutting board walnut		40960000	124.50
· F16 Cutting board oak		40961000	93.40
· F17 Mobile drainboard	Stainless Steel	40962800	81.00
· F14 Multifunctional strainer	Matt Black	40963000	20.30

Measurements within scale drawings are in mm.

Technical specifications and units of measure are subject to change.



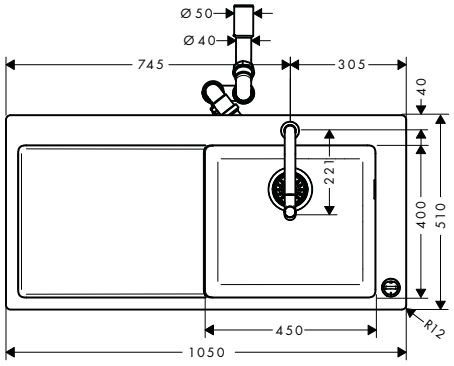

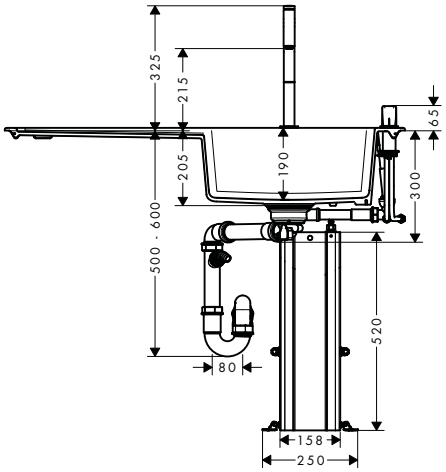

	finish	code no.	Euro
C51-F450-08 Sink combi 450 Select with drainboard left	Chrome	43219000	942.10

Select · Air Power · Quick Clean · Comfort Zone

- consists of: built-in sink, 2-hole single lever kitchen mixer, control unit, hose box, manual waste and overflow set
- for installation in worktops from 20 mm
- material sink: SilicaTec
- number of bowls: 1 main bowl
- with drainage
- tap hole for drilling is predefined (see scale drawing)
- orientation: bowl right
- sink depth: 190 mm
- cut-out dimensions: 1030 x 490 mm
- cabinet size: 60 cm
- type of installation: topmount
- position overflow: on the right side of the bowl
- connection type: G ⅜ connections
- connection dimension: DN15
- flow rate 8 l/ min
- suitable for continuous flow water heaters
- ceramic cartridge
- MagFit magnetic shower support
- integrated non-return valve
- swivel range 150°
- normal spray
- ComfortZone 200
- Select button for a comfortable start/stop of the water flow
- sBox for quiet, smooth and protected hose guidance in the cabinet, under the countertop, with extension length up to 76 cm

Consisting of:

- S514-F450 Built-in sink 450 with drainboard left (# 43314XXX)
- 2-hole single lever kitchen mixer 200, pull-out spray, 2jet, sBox (# 73818XXX)
- D16-10 Manual waste and overflow set for single bowl granite (# 43927000)

Optional parts:

· F15 Cutting board walnut		40960000	124.50
· F16 Cutting board oak		40961000	93.40
· F14 Multifunctional strainer	Matt Black	40963000	20.30

Measurements within scale drawings are in mm.

Technical specifications and units of measure are subject to change.



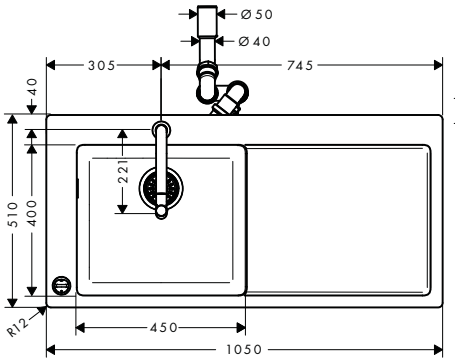

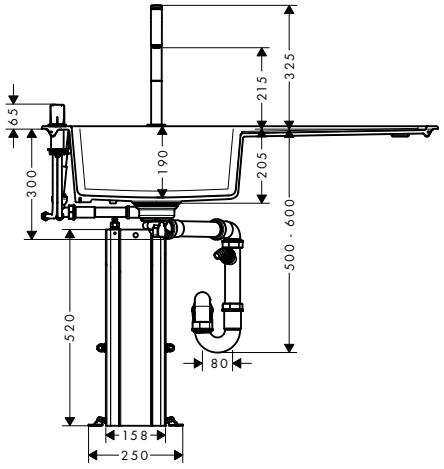

	finish	code no.	Euro
C51-F450-12 Sink combi 450 Select with drainboard right	Chrome	43228000	942.10

Select · Air Power · Quick Clean · Comfort Zone

- consists of: built-in sink, 2-hole single lever kitchen mixer, control unit, hose box, automatic waste and overflow set
- material sink: SilicaTec
- number of bowls: 1 main bowl
- with drainage
- tap hole for drilling is predefined (see scale drawing)
- orientation: bowl left
- sink depth: 190 mm
- cut-out dimensions: 1030 x 490 mm
- cabinet size: 60 cm
- type of installation: topmount
- position overflow: on the left side of the bowl
- connection type: G ⅜ connections
- connection dimension: DN15
- flow rate 8 l/ min
- suitable for continuous flow water heaters
- ceramic cartridge
- MagFit magnetic shower support
- integrated non-return valve
- swivel range 150°
- normal spray
- ComfortZone 200
- Select button for a comfortable start/stop of the water flow
- sBox for quiet, smooth and protected hose guidance in the cabinet, under the countertop, with extension length up to 76 cm

Consisting of:

- S711-F450 Built-in sink 450 (# 43301800)
- 2-hole single lever kitchen mixer 200, pull-out spray, 2jet, sBox (# 73818XXX)
- D16-10 Manual waste and overflow set for single bowl granite (# 43927000)

Optional parts:

· F15 Cutting board walnut		40960000	124.50
· F16 Cutting board oak		40961000	93.40
· F14 Multifunctional strainer	Matt Black	40963000	20.30

Measurements within scale drawings are in mm.

Technical specifications and units of measure are subject to change.



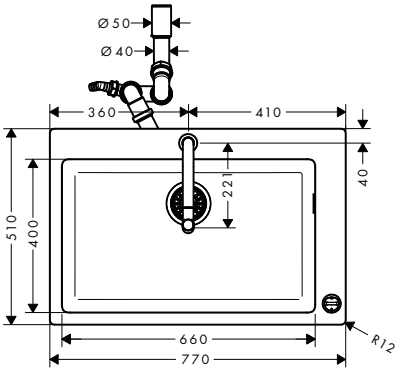

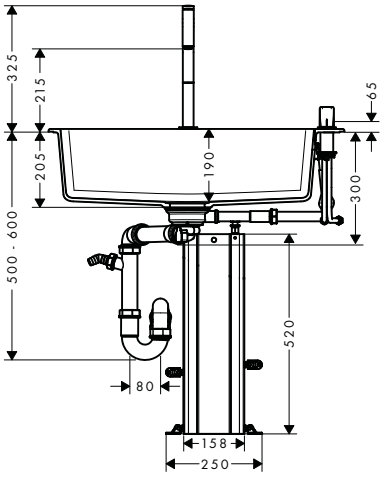

	finish	code no.	Euro
C51-F660-07 Sink combi 660 Select	Chrome	43218000	860.20

Select · Air Power · Quick Clean · Comfort Zone

- consists of: built-in sink, 2-hole single lever kitchen mixer, control unit, hose box, manual waste and overflow set
- material sink: SilicaTec
- number of bowls: 1 main bowl
- tap hole for drilling is predefined (see scale drawing)
- sink depth: 190 mm
- cut-out dimensions: 750 x 490 mm
- cabinet size: 80 cm
- type of installation: topmount
- position overflow: on the right side of the bowl
- connection type: G ⅜ connections
- connection dimension: DN15
- flow rate 8 l/ min
- suitable for continuous flow water heaters
- ceramic cartridge
- MagFit magnetic shower support
- integrated non-return valve
- swivel range 150°
- normal spray
- ComfortZone 200
- Select button for a comfortable start/stop of the water flow
- sBox for quiet, smooth and protected hose guidance in the cabinet, under the countertop, with extension length up to 76 cm

Consisting of:

- S510-F660 Built-in sink 660 (# 43313XXX)
- 2-hole single lever kitchen mixer 200, pull-out spray, 2jet, sBox (# 73818XXX)
- D16-10 Manual waste and overflow set for single bowl granite (# 43927000)

Optional parts:

· F15 Cutting board walnut		40960000	124.50
· F16 Cutting board oak		40961000	93.40
· F17 Mobile drainboard	Stainless Steel	40962800	81.00
· F14 Multifunctional strainer	Matt Black	40963000	20.30

Measurements within scale drawings are in mm.

Technical specifications and units of measure are subject to change.



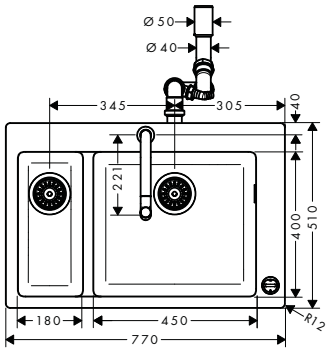

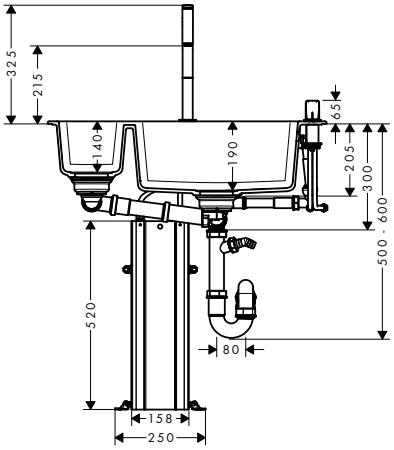

C51-F635-09 Sink combi 180/450 Select

finish	code no.	Euro
Chrome	43220000	880.60

Select · Air Power · Quick Clean · Comfort Zone

- consists of: built-in sink, 2-hole single lever kitchen mixer, control unit, hose box, manual waste and overflow set
- material sink: SilicaTec
- number of bowls: 1 main bowl and 1 additional bowl
- tap hole for drilling is predefined (see scale drawing)
- sink depth: 190 mm
- cut-out dimensions: 750 x 490 mm
- cabinet size: 80 cm
- type of installation: topmount
- position overflow: on the right side of the main bowl
- connection type: G ⅜ connections
- connection dimension: DN15
- flow rate 8 l/ min
- suitable for continuous flow water heaters
- ceramic cartridge
- MagFit magnetic shower support
- integrated non-return valve
- swivel range 150°
- normal spray
- ComfortZone 200
- Select button for a comfortable start/stop of the water flow
- sBox for quiet, smooth and protected hose guidance in the cabinet, under the countertop, with extension length up to 76 cm

Consisting of:

- S510-F635 Built-in sink 180/450 (# 43315XXX)
- 2-hole single lever kitchen mixer 200, pull-out spray, 2jet, sBox (# 73818XXX)
- D17-10 Manual waste and overflow set for double bowl granite (# 43928000)

Optional parts:

· F15 Cutting board walnut		40960000	124.50
· F16 Cutting board oak		40961000	93.40
· F17 Mobile drainboard	Stainless Steel	40962800	81.00
· F14 Multifunctional strainer	Matt Black	40963000	20.30

Measurements within scale drawings are in mm.

Technical specifications and units of measure are subject to change.



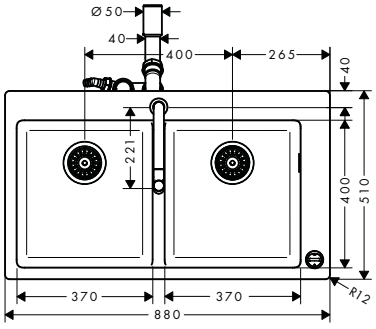

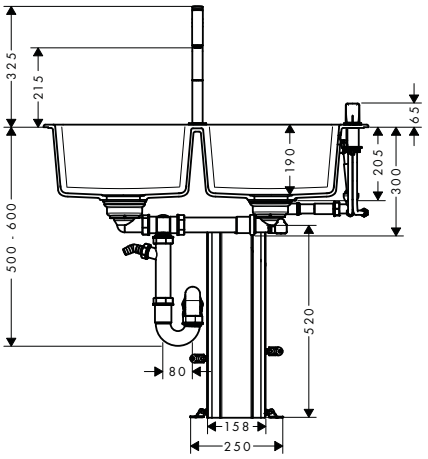

C51-F770-10 Sink combi 370/370 Select

- consists of: built-in sink, 2-hole single lever kitchen mixer, control unit, hose box, manual waste and overflow set
- material sink: SilicaTec
- number of bowls: 2 main bowls
- tap hole for drilling is predefined (see scale drawing)
- sink depth: 190 mm
- cut-out dimensions: 860 x 490 mm
- cabinet size: 90 cm
- type of installation: topmount
- position overflow: on the right side of the bowl
- connection type: G ⅜ connections
- connection dimension: DN15
- flow rate 8 l/ min
- suitable for continuous flow water heaters
- ceramic cartridge
- MagFit magnetic shower support
- integrated non-return valve
- swivel range 150°
- normal spray
- ComfortZone 200
- Select button for a comfortable start/stop of the water flow
- sBox for quiet, smooth and protected hose guidance in the cabinet, under the countertop, with extension length up to 76 cm

Consisting of:

- S510-F770 Built-in sink 370/370 (# 43316XXX)
- 2-hole single lever kitchen mixer 200, pull-out spray, 2jet, sBox (# 73818XXX)
- D17-10 Manual waste and overflow set for double bowl granite (# 43928000)

Optional parts:

- F15 Cutting board walnut
- F16 Cutting board oak
- F17 Mobile drainboard
- F14 Multifunctional strainer

finish	code no.	Euro
Chrome	43221000	942.10
	40960000	124.50
	40961000	93.40
Stainless Steel	40962800	81.00
Matt Black	40963000	20.30

Select · Air Power · Quick Clean · Comfort Zone

Measurements within scale drawings are in mm.

Technical specifications and units of measure are subject to change.

Optional parts for stainless steel sinks

	finish	code no.	Euro
	Stainless Steel	43921800	25.00

D14-10 Manual waste and overflow set for single bowl

- consists of: waste and overflow set, screen basket, trap
- drain system: drain operation via pushing/pulling screen basket
- diameter 40 / 50
- 1 1/2" with space-saving drain pipe and odor trap
- screen basket: 3 1/2"

	finish	code no.	Euro
	Stainless Steel	43922800	41.70

D15-10 Manual waste and overflow set for double bowl

- consists of: waste and overflow set, screen basket, trap
- drain system: drain operation of main bowl and additional bowl via pushing/pulling screen basket
- diameter 40 / 50
- 1 1/2" with space-saving drain pipe and odor trap
- screen basket: 3 1/2"

	finish	code no.	Euro
	Stainless Steel	43931800	43.80

D14-11 Automatic waste and overflow set for single bowl

- turning handle for eccentric operation in chrome
- consists of: waste and overflow set, pop-up waste set, trap
- drain system: drain operation via turning pop-up handle
- diameter 40 / 50
- 1 1/2" with space-saving drain pipe and odor trap
- screen basket: 3 1/2"

Optional parts:

		finish	code no.	Euro
· A11 turning handle for eccentric operation	**NEW**	Stainless Steel Finish Matt Black	40953800 40953670	17.10 30.00

	finish	code no.	Euro
	Stainless Steel	43932800	67.80

D15-11 Automatic waste and overflow set for double bowl

- turning handle for eccentric operation in chrome
- consists of: waste and overflow set, pop-up waste set, trap
- drain system: drain operation of main bowl via turning pop-up handle and additional bowl via pushing/pulling screen basket
- diameter 40 / 50
- 1 1/2" with space-saving drain pipe and odor trap
- screen basket: 3 1/2"

Optional parts:

		finish	code no.	Euro
· A11 turning handle for eccentric operation	**NEW**	Stainless Steel Finish Matt Black	40953800 40953670	17.10 30.00

Measurements within scale drawings are in mm.

Technical specifications and units of measure are subject to change.

	finish	code no.	Euro
			
D14-12 Automatic waste and overflow set for single bowl Select · consists of: waste and overflow set, pop-up waste set, trap · drain system: drain operation via turning pop-up handle · diameter 40 / 50 · 1 1/2" with space-saving drain pipe and odor trap · screen basket: 3 1/2"	Stainless Steel	43941800	30.20
Optional parts: · A11 turning handle for eccentric operation	Stainless Steel Finish **NEW** Matt Black	40953800 40953670	17.10 30.00
			
D15-12 Automatic waste and overflow set for double bowl Select · consists of: waste and overflow set, pop-up waste set, trap · drain system: drain operation of main bowl via turning pop-up handle and additional bowl via pushing/pulling screen basket · diameter 40 / 50 · 1 1/2" with space-saving drain pipe and odor trap · screen basket: 3 1/2"	Stainless Steel	43942800	47.90
Optional parts: · A11 turning handle for eccentric operation	Stainless Steel Finish **NEW** Matt Black	40953800 40953670	17.10 30.00

Optional parts for granite sinks

			
D16-10 Manual waste and overflow set for single bowl granite · consists of: waste and overflow set, screen basket, trap · drain system: drain operation via pushing/pulling screen basket · diameter 40 / 50 · 1 1/2" with space-saving drain pipe and odor trap · screen basket: 3 1/2"	Chrome	43927000	24.90
			
D17-10 Manual waste and overflow set for double bowl granite · consists of: waste and overflow set, screen basket, trap · drain system: drain operation of main bowl and additional bowl via pushing/pulling screen basket · diameter 40 / 50 · 1 1/2" with space-saving drain pipe and odor trap · screen basket: 3 1/2"	Chrome	43928000	41.50

Measurements within scale drawings are in mm.

Technical specifications and units of measure are subject to change.

		finish	code no.	Euro
	D16-11 Automatic waste and overflow set for single bowl granite · consists of: waste and overflow set, pop-up waste set, trap · drain system: drain operation via turning pop-up handle · diameter 40 / 50 · 1 1/2" with space-saving drain pipe and odor trap · screen basket: 3 1/2"	Chrome	43937000	43.60
	Optional parts: · A11 turning handle for eccentric operation	Stainless Steel Finish **NEW** Matt Black	40953800 40953670	17.10 30.00
	D17-11 Automatic waste and overflow set for double bowl granite · consists of: waste and overflow set, pop-up waste set, trap · drain system: drain operation of main bowl via turning pop-up handle and additional bowl via pushing/pulling screen basket · diameter 40 / 50 · 1 1/2" with space-saving drain pipe and odor trap · screen basket: 3 1/2"	Chrome	43938000	67.50
	Optional parts: · A11 turning handle for eccentric operation	Stainless Steel Finish **NEW** Matt Black	40953800 40953670	17.10 30.00
	D16-12 Automatic waste and overflow set for single bowl granite Select · consists of: waste and overflow set, pop-up waste set, trap · drain system: drain operation via turning pop-up handle · diameter 40 / 50 · 1 1/2" with space-saving drain pipe and odor trap · screen basket: 3 1/2"	Chrome	43947000	30.10
	D17-12 Automatic waste and overflow set for double bowl granite Select · consists of: waste and overflow set, pop-up waste set, trap · drain system: drain operation of main bowl via turning pop-up handle and additional bowl via pushing/pulling screen basket · diameter 40 / 50 · 1 1/2" with space-saving drain pipe and odor trap · screen basket: 3 1/2"	Chrome	43948000	47.70
	Optional parts: · A11 turning handle for eccentric operation	Stainless Steel Finish **NEW** Matt Black	40953800 40953670	17.10 30.00

Measurements within scale drawings are in mm.

Technical specifications and units of measure are subject to change.

Optional parts for built-in sinks and undermount sinks



A10 drain cover

· stainless steel sinks with 3 ½" basket strainer

finish	code no.	Euro
Stainless Steel Finish	40952800	11.80



A11 turning handle for eccentric operation

· material: metal

	finish	code no.	Euro
	Stainless Steel Finish	40953800	17.10
NEW	Matt Black	40953670	30.00

Optional parts for sBox



F12 compensating element for sBox

· for height compensation of the sBox up to 100 mm

code no.	Euro
43333000	21.40

Measurements within scale drawings are in mm.

Technical specifications and units of measure are subject to change.

		finish	code no.	Euro
	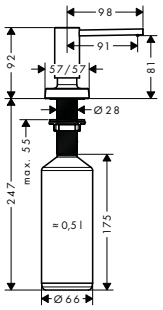	**A71 soap-/ lotion dispenser** · suitable for matched design to selected kichen mixers · projection 91 mm · material: durable metal construction · non-corroding outlet pipe · filling capacity 500 ml · dosage 2 ml · easy to fill up from the top · for installation in worktops up to 55 mm · easy and save installation without tools needed · mounting hole with 28 - 35 mm diameter needed	**NEW** Chrome **NEW** Matt Black Stainless Steel Finish	40468000 40468670 40468800	77.80 105.00 101.10
	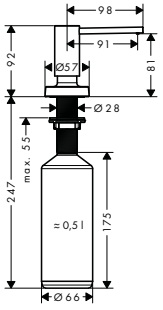	**A51 soap-/ lotion dispenser** · suitable for matched design to selected kichen mixers · projection 91 mm · material: durable metal construction · non-corroding outlet pipe · filling capacity 500 ml · dosage 2 ml · easy to fill up from the top · for installation in worktops up to 55 mm · easy and save installation without tools needed · mounting hole with 28 - 35 mm diameter needed	Chrome **NEW** Matt Black Stainless Steel Finish	40448000 40448670 40448800	77.80 105.00 101.10
	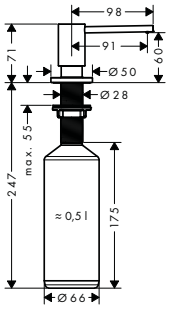	**A41 soap-/ lotion dispenser** · suitable for matched design to selected kichen mixers · projection 91 mm · material: durable metal construction · non-corroding outlet pipe · filling capacity 500 ml · dosage 2 ml · easy to fill up from the top · for installation in worktops up to 55 mm · easy and save installation without tools needed · mounting hole with 28 - 35 mm diameter needed	Chrome **NEW** Brushed Black Chrome **NEW** Matt Black Stainless Steel Finish	40438000 40438340 40438670 40438800	57.00 82.50 77.00 74.20
	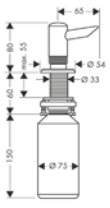	**Soap-/ lotion dispenser** · filling capacity 300 ml	Chrome Stainless Steel Finish	40418000 40418800	101.80 152.70

Measurements within scale drawings are in mm.

Technical specifications and units of measure are subject to change.

	finish	code no.	Euro
Kitchen device shut-off valve · for counter surfaces up to 47 mm thick · shaft Ø 27 mm · non-return valve · connection dimension DN15 · device connection DN20	Chrome Stainless Steel Finish	10823000 10823800	139.20 208.80
NEW **F21- Shut-off valve for concealed installation** · device shut-off valve for installation in kitchen sinks and worktops · diameter drill hole: 35 mm · connection dimension G ½ inclusive adapter G ¾ · clamping range: 0 - 60 mm	Chrome Matt Black Stainless Steel Finish	72841000 72841670 72841800	65.00 84.50 84.50
F15 Cutting board walnut · perfect to work in and outside of the sink · suitable for S51 silicaTec sinks, S71 stainless steel sinks · material: walnut		40960000	124.50
F16 Cutting board oak · perfect to work in and outside of the sink · suitable for S51 silicaTec sinks, S71 stainless steel sinks · material: oak		40961000	93.40
F14 Multifunctional strainer · ideal to clean fruits and vegetables or to pour out noodles · suitable for S51 silicaTec sinks, S71 stainless steel sinks, kitchen sinks with a depth of 400 mm and 410 mm · material: plastic	Matt Black	40963000	20.30
F17 Mobile drainboard · perfect to unfreeze food · for safe storage of glasses and bulky dishes · high functionality, water can run off easily into the sink · suitable for S51 silicaTec sinks, S71 stainless steel sinks · material: plastic/stainless steel	Stainless Steel	40962800	81.00

Measurements within scale drawings are in mm.

Technical specifications and units of measure are subject to change.

	finish	code no.	Euro
	F18 Cleaning and care spray stainless steel 250 ml · Cleaning and maintaining in one step · Finger print protection · Ideal for kitchen sinks and faucets · consists of: Pump spray 250 ml	40964000	14.20
	F19 Cleaning and care spray stainless steel 28 pcs.x 30 ml · Cleaning and maintaining in one step · Finger print protection · Ideal for kitchen sinks and faucets · consists of: Pump spray 30 ml · filling capacity 30 ml · packaging unit: 28 pieces	40966000	116.60
	F20 Cleaning and care set SilicaTec · Removes limescale and bloom from the sink · Protection from dirt, stains and limescale · Supports an easier cleaning of the sink · consists of: Pump spray 250 ml limescale remover, Pump spray 250 ml impregnation spray, cleaning sponge (packaging of 3)	40965000	23.30

Measurements within scale drawings are in mm.

Technical specifications and units of measure are subject to change.

Spare parts and accessories for showers, bath mixers and kitchen mixers





Shower hose	page 560		Showers	page 560	
Shower holder and slider	page 560		Soap dishes and shampoo holder	page 561	
Covers	page 563		Service sets for showers	page 564	
Wall bar spacers	page 564				
Cartridges	page 567		Spray former/ aerators	page 568	
Diverters	page 570		Shut-off units and thermostatic cartridges	page 570	
Handles	page 571		Escutcheons and flanges	page 575	

Shower hose



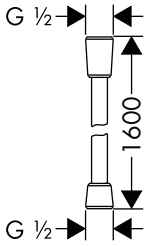

Isiflex Shower hose 160 cm

- high-quality shower hose
- with plastic coating, easy to clean
- shower hose length: 1.60 m
- pivot connector prevent hose from tangling
- kink-protected

	finish	code no.	Euro
	Chrome	28276000	25.00
	Chrome/Blue	28276030	42.00
	Chrome/Gold Optic	28276090	51.80
	Brushed Bronze	28276140	37.50
	Brushed Black Chrome	28276340	37.50
	Red	28276430	42.00
	White	28276450	31.30
	Grey	28276460	42.00
	Yellow	28276480	42.00
	Black	28276610	42.00
	Aranja	28276650	51.80
	Matt Black	28276670	35.00
	Aranja/Goldoptic	28276680	63.20
	Matt White	28276700	35.00
	Stainless Steel Optic	28276800	37.50
	Satinox	28276810	42.00
	Satin Chrome	28276880	42.00
	Polished Gold Optic	28276990	37.50

Alternative sizes:

· **Isiflex** Shower hose 125 cm		Chrome	28272000	23.10
	NEW	Brushed Bronze	28272140	34.70
	NEW	Brushed Black Chrome	28272340	34.70
		White	28272450	29.00
	NEW	Matt Black	28272670	29.00
	NEW	Matt White	28272700	29.00
	NEW	Polished Gold Optic	28272990	34.70
· **Isiflex** Shower hose 200 cm		Chrome	28274000	26.60

Showers



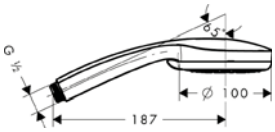

Croma 100 Hand shower Multi

- shower head size: 100 mm
- spray type: Rain, MonoRain, Massage spray
- spray type adjustment by turning spray disc
- maximum flow rate at 3 bar: 19 l/min
- with internal water conduction
- rinseable dirt filter
- connection thread G ½
- connection dimension: DN15
- suitable for continous flow water heaters

	finish	code no.	Euro
	Chrome	28536000	63.20
	Blue	28536330	91.70
	Red	28536430	91.70
	White	28536450	91.70
	Grey	28536460	91.70
	Black	28536610	91.70
	Green (Flash)	28536710	91.70
	Satinox	28536810	91.70
	Satin Chrome	28536880	91.70

Quick Clean | XXL Performance

Water saving EcoSmart version:

· **Croma 100** Hand shower Multi EcoSmart 9 l/min	Chrome	28538000	67.80

Shower holder and sliders



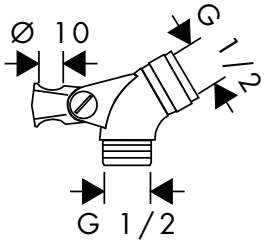

Universal joint for Unica

- dimension: G ½

finish	code no.	Euro
Chrome	28650000	16.50



Support for Unica'88 wall bar Ø 22 mm

- diameter: 22 mm

	finish	code no.	Euro
	Chrome	28672000	26.40
	White	28672450	51.80
	Satin Chrome	28672880	42.00

Measurements within scale drawings are in mm.

Technical specifications and units of measure are subject to change.

	finish	code no.	Euro
 Support for Unica'E wall bar (satinchrome)	Satin Chrome	96170000	51.80
 Support for Unica'A wall bar	Chrome Fine Brass	96195000 96195840	91.70 183.40
 Slider for Unica'D shower bar · diameter: 25 mm	Chrome Blue Red White Grey Yellow Black Fine Brass Satin Chrome	96190000 96190330 96190430 96190450 96190460 96190480 96190610 96190840 96190880	51.80 63.20 63.20 63.20 63.20 63.20 63.20 91.70 63.20
 Slider for Pharo shower panel Comfort Plus	Satin Chrome	25968000	51.80
 Support for Unica' B wall bar · diameter: 22 mm	Topas Translucent Blue Fine Brass Satin Chrome	95065520 95065530 95065840 95065880	51.80 51.80 73.70 51.80
 Support for Rainbow wall bar · diameter: 25 mm	Chrome	97336000	63.20

Soap dishes and shampoo holder


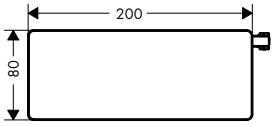

Casetta Soap dish/ shelf E
· length 200 mm
· material: flat aluminium profile with safety glass finish
· shelf finish: chrome, white or black

Chrome	26511000	64.00
White/Chrome	26511400	64.00
Black/Chrome	26511600	64.00


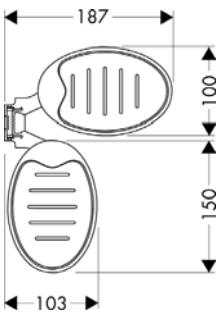

Casetta Soap dishes Raindance
· material: plastic

Chrome	28698000	73.80

Measurements within scale drawings are in mm.

Technical specifications and units of measure are subject to change.

		finish	code no.	Euro
 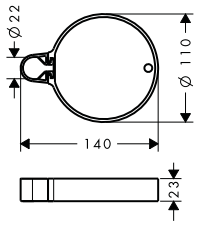	**Casetta** Soap dish C · for shower bars with Ø 22 mm · removable	Chrome	28678000	14.70
 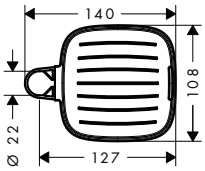	**Casetta** Soap dish E · material: plastic · for shower bars with Ø 18 / 22 / 25 mm	Chrome	26519000	18.60
 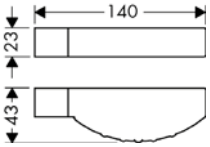	**Casetta** Soap dishes Unica 88 · for shower bars with Ø 22 mm · material: transparent plastic · self-draining soap dish for Unica S and C wallbars	Transparent	28675000	26.40
 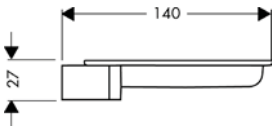	**Casetta** Soap dish S · material: transparent plastic · removable	Transparent	28684000	14.70
 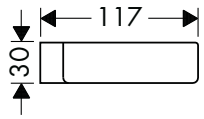	Casetta soap dish for Unica'E/ Unica'F wall bar	Transparent	28685000	26.40
	Clips Ø 25 mm for Casetta'D soap dishes · diameter: 25 mm · packaging unit = 2 pieces	Transparent	96192000	6.20

Measurements within scale drawings are in mm.

Technical specifications and units of measure are subject to change.

		finish	code no.	Euro
	Clip for Casetta'E soap dish · packaging unit = 1 pieces	Transparent	96193000	3.80
	Clips for Casetta'F soap dishes · packaging unit = 2 pieces	Transparent	96194000	6.20
	Clip Ø 18 mm for Casetta Unica standard soap dishes · diameter: 18 mm · packaging unit = 1 pieces	Transparent	96188000	3.80
	Clip Ø 22 mm for Casetta Unica'88 and Casetta Unica'S soap dishes · packaging unit = 1 pieces		96189000	3.80
	Shampoo holder and cover for Unica'E wall bar	White Satin Chrome	96177450 96177880	13.40 13.40
Covers				
	Cover for Unica'A wall bar · packaging unit = 2 pieces	Chrome	96272000	16.50
	Wall support and cover for Unica'88 wall bar · for wall bars with a diameter of 22 mm	Chrome White	92109000 92109450	26.40 32.70
	Covers for Unica'88 wall bar	Chrome	92107000	13.40
	Cover for Unica'88 wall bar · wall bar Ø 22 mm · packaging unit = 2 pieces	Chrome	94053000	13.40
	Cover for Unica'B wall bar · wall bar Ø 22 mm	Chrome	95064000	13.40

Measurements within scale drawings are in mm.

Technical specifications and units of measure are subject to change.

		finish	code no.	Euro
	Covers for Unica'D wall bar · wall bar Ø 25 mm · packaging unit = 2 pieces	Chrome	94055000	13.40
	Covers for Unica'S wall bar · wall bar Ø 22 mm · packaging unit = 2 pieces	Chrome	94051000	10.20
	Wall support and cover for Unica'S wall bar · for wall bars with a diameter of 22 mm	Chrome	96191000	16.50
	Covers for Raindance wall bar		97116000	42.00
Service sets for showers				
	Service set for Selecta Novo hand shower		92018000	13.40
	Service set for Aktiva hand shower		92027000	20.70
	Service set for Team Compact overhead shower		92017000	32.70
Wall bar spacers				
 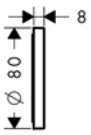	Wall bar spacer · material: plastic	Chrome	98681000	13.40
 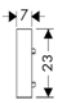	Wall bar spacer for Unica wall bar D · material: plastic	Chrome	96186000	8.10

Measurements within scale drawings are in mm.

Technical specifications and units of measure are subject to change.

	finish	code no.	Euro
 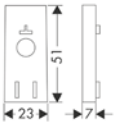	**Wall bar spacer** · material: plastic	Chrome	97450000	8.10
 	**Wall bar spacer for Unica wall bar S** · material: plastic	Chrome	96184000	7.60
Other shower spare parts				
	**Hose seal**		98058000	2.30
 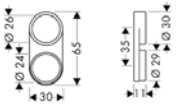	**Hose duct** · material: transparent plastic	Transparent	28072000	4.10
	Rising pipe for Showerpipe · length: 1,450 mm · diameter: 22 mm · pipe can be shortened	Chrome	96770000	183.40
	**Water saving set for Croma hand shower**		96708000	6.20
	**Water saving set** · material: plastic		92019000	3.80
	**Mounting set for Unica wall bars**		96179000	8.30

Measurements within scale drawings are in mm.

Technical specifications and units of measure are subject to change.

		finish	code no.	Euro
	Hose connection for Ecostat thermostatic shower mixer for exposed installation		98556000	20.70
	Filter packing		94246000	2.30
 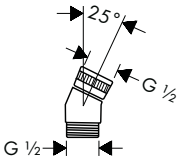	Rim mounted adapter 25° · dimension: G ½	Chrome	28071000	26.40

Measurements within scale drawings are in mm.

Technical specifications and units of measure are subject to change.

Cartridges

		finish	code no.	Euro
	Ceramic cartridge complete M3/ M2		92730000	42.00
	Cartridge complete without mouth spray connection unit · for washbasin mixers, bidet mixers and single lever kitchen mixers		14095000	73.70
	Cartridge complete with mouth spray connection unit · for washbasin mixers with ball mixing system		14098000	73.70
	Cartridge complete for mixers for vented hot water cylinders · for washbasin mixers with ball mixing system		14097000	73.70
	Ball cartrigde complete · for bath and shower mixers		14096000	73.70
	Service set · service key part of delivery · for mixers with ball mixing systems		13952000	26.40
	Service set without service key		98804000	20.70
	Mixer ball without mouth spray connection unit · for mixers with ball mixing systems		13964000	32.70
	Mixer ball with mouth spray connection unit · for washbasin mixers with ball mixing system		13097000	32.70
	Joystick cartridge complete for AXOR mixer		96339000	51.80
	Cartridge complete with handle for AXOR Starck Classic mixer	Chrome	94004000	118.90

Measurements within scale drawings are in mm.

Technical specifications and units of measure are subject to change.

		finish	code no.	Euro
	Cartridge complete with handle for AXOR Starck kitchen mixer		95052000	73.70
	Sealing set for AXOR Starck kitchen mixer with swivel spout		95053000	20.70
	Sealing set for Allegra kitchen mixer with swivel spout		96529000	13.40
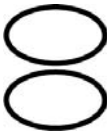	Sealing set for Allegra Linea/ Allegra Solida kitchen mixer with swivel spout		94850000	16.50
	Cartridge for AXOR Arco mixer		11095000	73.70
	Service set for pillar tap		94156000	13.40
Spray former/ aerators				
	Aerator M24x1 with water dimmer 7 l/ min · thread dimension: M24x1 · flow rate: 7 l/ min · usage: bathroom mixer	Chrome Satinox	13085000 13085810	8.30 10.20
	Spray former M24x1 pressureless · thread dimension: M24x1	Chrome	94033000	6.20
	Aerator M28x1 without water dimmer for bath spout and bath mixer · thread dimension: M28x1 · flow rate: 25 l/ min · usage: bathroom mixer	Chrome	13485000	13.40

Measurements within scale drawings are in mm.

Technical specifications and units of measure are subject to change.

		finish	code no.	Euro
	QuickClean aerator M24x1 with water dimmer 7 l/ min · thread dimension: M24x1 · flow rate: 5 l/ min · packaging unit = 10 pieces	Chrome	13912000	13.10
	SoftJet Aerator set M24x1 with water dimmer 5 l/ min · thread dimension: M24x1 · packaging unit = 2 pieces		13182000	11.70
	QuickClean aerator M24x1 without water dimmer for kitchen mixer · thread dimension: M24x1 · flow rate: 15 l/ min · usage: kitchen mixer · packaging unit = 10 pieces	Chrome	13913000	10.20
	QuickClean aerator M24x1 without water dimmer for bath spout · thread dimension: M24x1 · flow rate: 25 l/ min · usage: bathroom mixer	Chrome	13914000	10.40
	Aerator M24 x 1 with water dimmer 7 l/ min for AXOR Starck/ AXOR Starck Classic basin mixer · thread dimension: M24x1 · flow rate: 7 l/ min · usage: bathroom mixer	Chrome	94005000	16.50
	Flood jet spray former for AXOR Starck X mixer		97462000	26.40
	Laminar spray former for AXOR Starck X mixer · spray type: laminar spray · flowrate: 7 l/ min · for bathroom mixer		98610000	26.40

Measurements within scale drawings are in mm.

Technical specifications and units of measure are subject to change.

		finish	code no.	Euro
	Spout complete for AXOR Arco mixer · rotatable spout	Chrome	11098000	63.20
	Interior spout for AXOR Arco mixer		94183000	26.40
Diverters				
	Diverter for bath mixer for concealed installation · <05/87		13970000	51.80
	Diverter complete for bath and shower mixer for concealed installation from 06/1987 · >06/87	Chrome	13971000	63.20
	Diverter complete for AXOR mixer for concealed installation with pipe interrupter	Chrome	13473000	73.70
	Diverter for bath mixer for concealed installation with iBox universal	Chrome	95014000	42.00
	Diverter complete for bath mixer for exposed installation wall-mounted		94077000	26.40
Shut-off units and thermostatic cartridges				
	Shut-off unit spindle · spindle · DN15 · right closing		94142000	20.70
	Ceramic shut-off unit right-closing · ceramic · DN15 · right closing · closing angle: 90°		94009000	26.40

Measurements within scale drawings are in mm.

Technical specifications and units of measure are subject to change.

	finish	code no.	Euro
	Ceramic shut-off unit left-closing · ceramic · DN15 · left closing · closing angle: 90°	94008000	26.40
	Shut-off unit with ceramic valves · ceramic · DN15 · right closing · closing angle: 180°	94149000	20.70
	Non-return valve for thermostatic mixer	92605000	26.40
	Temperature cartridge for thermostatic mixer DN15 · DN15 · wax capsule	92601000	118.90
	Temperature cartridge for thermostatic mixer DN20 · DN20 · wax capsule	92631000	183.40
	MTC temperature control unit for thermostatic mixer · wax capsule	94282000	91.70
	Temperature control unit for Ecostat 2001 thermostatic mixer for exposed installation · 05/91 - 09/99	94141000	118.90
	Plastic screw and filter for valve	97592000	16.50

Measurements within scale drawings are in mm.

Technical specifications and units of measure are subject to change.

Handles

		finish	code no.	Euro
	Handle for Allegra Metropol kitchen mixer · handle type: handle · type of fixation: screwed	Chrome	14890000	51.80
	Handle for Allegra Linea/ Solida kitchen mixer	Chrome	14891000	51.80
	Handle for Allegra Premia kitchen mixer	Chrome	16891000	73.70
	Handle for Allegra Elegance kitchen mixer	Chrome	33891000	42.00
	Handle for Allegra Slim kitchen mixer	Chrome	31991000	42.00
	Handle for Metropol mixer	Chrome	14091000	51.80
	Handle for Metris mixer	Chrome	31091000	42.00
	Handle for Talis S mixer · handle type: handle · type of fixation: screwed	Chrome	32092000	42.00
	Handle for Talis S basin mixer with (high) swivel spout	Chrome	32095000	42.00
	Handle for Talis E mixer	Chrome	33091000	42.00
	Handle for Focus S mixer · handle type: handle · type of fixation: screwed	Chrome	31793000	32.70

Measurements within scale drawings are in mm.

Technical specifications and units of measure are subject to change.

		finish	code no.	Euro
	Handle for Focus E mixer · handle type: handle · type of fixation: screwed	Chrome	31791000	32.70
	Handle for AXOR Uno Color basin-, bidet- and kitchen mixer · handle type: handle · type of fixation: screwed	Blue Red White Yellow Black	13290330 13290430 13290450 13290480 13290610	32.70 32.70 32.70 32.70 32.70
	Handle for AXOR Uno Color bath- and shower mixer · handle type: handle · type of fixation: screwed	Blue Red White Yellow Black	13690330 13690430 13690450 13690480 13690610	32.70 32.70 32.70 32.70 32.70
	Handle for AXOR Starck Puro kitchen mixer · handle type: handle · type of fixation: screwed	Chrome	10891000	51.80
	Handle for AXOR Starck kitchen mixer · handle type: handle · type of fixation: screwed	Chrome	10890000	51.80
	Handle for AXOR Starck Puro bath- and shower mixer for exposed installation	Chrome	10490000	73.70
	Handle for AXOR Steel kitchen mixer	Stainless Steel	35891800	118.90
	Handle for AXOR Uno kitchen mixer · handle type: handle · type of fixation: screwed	Chrome	14896000	51.80
	Handle for AXOR Allegroh thermostatic mixer for concealed installation · handle type: handle for thermostat · type of fixation: screwed	Chrome	16391000	42.00

Measurements within scale drawings are in mm.

Technical specifications and units of measure are subject to change.

		finish	code no.	Euro
	Handle for AXOR Allegroh shut-off valve for concealed installation · handle type: handle for shut off unit · type of fixation: snapped	Chrome	16991000	42.00
	Handle for AXOR Allegroh Trio/ Quattro shut-off/ diverter valve for concealed installation	Chrome	16993000	42.00
	Handle for AXOR Allegroh Novo thermostatic mixer for concealed installation	Chrome	36391000	73.70
	Handle for AXOR Allegroh Novo shut-off valve for concealed installation · handle type: handle for shut off unit · type of fixation: snapped	Chrome	36991000	42.00
	Handle for Ecostat 1001 sL thermostatic mixer for exposed installation	Chrome	96618000	20.70
	Push button set for Ecostat 1001 thermostatic mixer for exposed installation	Grey	97231000	13.40
	Handle for Excentra Fill/ Flexaplus	Chrome	96083000	20.70
Pull-out sprays				
	Pull-out spray for Allegroh kitchen mixer	Chrome White	13893000 13893450	91.70 91.70
	Pull-out spray for Allegra Linea/ Allegra Metropol kitchen mixer	Chrome	14893000	91.70

Measurements within scale drawings are in mm.

Technical specifications and units of measure are subject to change.

		finish	code no.	Euro
	Pull-out spray for Talis S² Variarc kitchen mixer	Chrome	96920000	73.70
	Pull-out spout for Talis S² Variarc kitchen mixer	Chrome	96919000	51.80
	Pull-out spray for AXOR Steel kitchen mixer	Stainless Steel	35893800	183.40
Escutcheons and flanges				
	Escutcheon for AXOR Allegroh shower mixer for concealed installation	Chrome	94272000	51.80
	Flange for Metropol basin mixer	Chrome	94130000	13.40
	Flange for bath mixer for concealed installation	Chrome	13981000	32.70
	Wall escutcheon for AXOR Uno bath- and shower mixer for exposed installation · dimension: Ø 68 mm	Chrome	96467000	13.40
	Wall escutcheon for Metropol bath mixer for exposed installation	Chrome	94135000	8.30
Mixer accessories				
 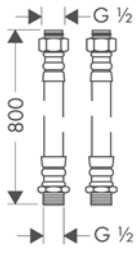	Connection tube set for 2-hole rim mounted thermostatic bath mixer		96387000	52.00

Measurements within scale drawings are in mm.

Mixer spare parts and accessories

	finish	code no.	Euro
 	Flexible connection tube 80 cm · length 800 mm · version: 90° angle		58192000	104.50
 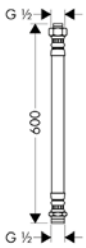	Connection tube for 2-hole rim mounted thermostatic bath mixer · length: 600 mm · thread dimension: G ½ x G ½		96396000	28.20
Other mixer spare parts				
	Screw cover	Chrome	94063000	6.20
	Connection hose for shower column M10 x G ⅜ · length: 450 mm · thread dimension: M10 x G ⅜		96507000	26.40
	Connection hose 450 mm for plugging · length: 450 mm · thread dimension: M8 x G ⅜		94076000	20.70
	Diverter knob for bath mixer for exposed installation	Chrome	94078000	10.20
 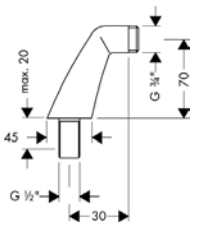	Pillar unions for rim mounted bath mixer	Chrome	14920000	120.30
	Adapter piece with screw for handle fixation		94184000	3.80

Measurements within scale drawings are in mm.

Technical specifications and units of measure are subject to change.

	finish	code no.	Euro
 Non-return valve · packaging unit = 2 pieces		94074000	10.20
 Dirt filter for Ecostat thermostatic mixer		95039000	3.80
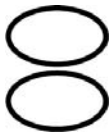 Sealing set for Allegra Linea/ Allegra Solida kitchen mixer with swivel spout		94850000	16.50
 Waste set pop-up for basin and bidet mixers · operation via pull-rod · for basins with overflow hole · brass · drain plug material brass · connection dimension G 1¼	Chrome	94139000	60.70
 Converter complete		96100000	3.80
 Lever arm 340 mm		96324000	16.50
Pull-rod complete	Chrome White	92620000 92620450	20.70 32.70
 Pull-rod universal	Chrome Stainless Steel	96657000 96657800	8.30 16.50
 Fixation set complete		96016000	20.70
  Shaft fixation set for mixer · diameter: 32 mm · thread dimension: M33x1.5		13961000	16.50

Measurements within scale drawings are in mm.

Technical specifications and units of measure are subject to change.

Mixer spare parts and accessories

		finish	code no.	Euro
	Special ball-S-union set		13988000	91.70
	Ball-S-union set · centre distance: 150 ± 16 mm · packaging unit = 2 pieces · thread dimension: G ½ x M36x1.5		13989000	26.40
 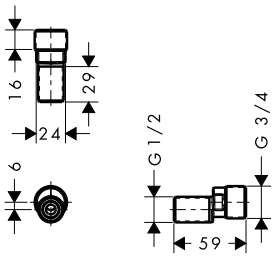	S-union set		94140000	32.70
	O-ring 35 x 2.5 mm		96006000	2.30
	O-ring 48 x 7.25 mm		98003000	2.30
	O-ring 36 x 3.5 mm		98066000	2.30
	O-ring 34 x 3 mm		98069000	2.30
	Seal DN32		53971000	2.30
	Wedge-shaped seal DN32		53985000	2.30
	Nylon hose for kitchen mixer 1.25 m		95048000	51.80

Measurements within scale drawings are in mm.

Technical specifications and units of measure are subject to change.

		finish	code no.	Euro
	Metal hose for kitchen mixer		96200000	42.00
	Secuflex metal shower hose for 3-hole rim mounted/ tile mounted bath mixer		94129000	63.20
	Secuflex metal shower hose for 4-hole rim mounted/ tile mounted bath mixer · length: 2,000 mm · maximum pull-out length : 1,100 mm · thread dimension: G ½ x G ½	Chrome	94148000	51.80
 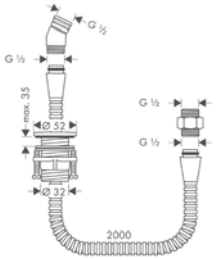	Shower holder rim mounted · consists of: shower holder, shower hose · maintenance opening required	Chrome	28307000	100.40
 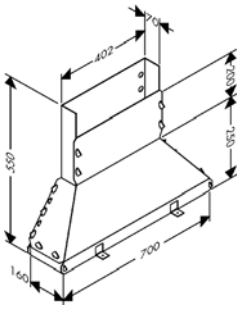	Secuflex box		28389000	42.00
 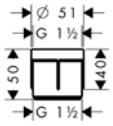	Secuflex insert extension		98806000	3.80
	Fixing set for shut-off valve for concealed installation		96392000	20.70

Measurements within scale drawings are in mm.

Technical specifications and units of measure are subject to change.

		finish	code no.	Euro
	Thumb plug complete	Chrome White Satin Chrome	96026000 96026450 96026880	16.50 26.40 20.70
	Thumb plug large	Chrome Stainless Steel	96027000 96027800	16.50 26.40
	Safety plug for Excentra Fill/ Flexaplus	Chrome	96153000	20.70
 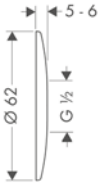	Wall flange · material: brass · connection dimension DN15 · packaging unit: 100 pieces	Chrome	06010000	2.40
	Hose connection for Ecostat thermostatic shower mixer for exposed installation		98556000	20.70

Flow diagrams

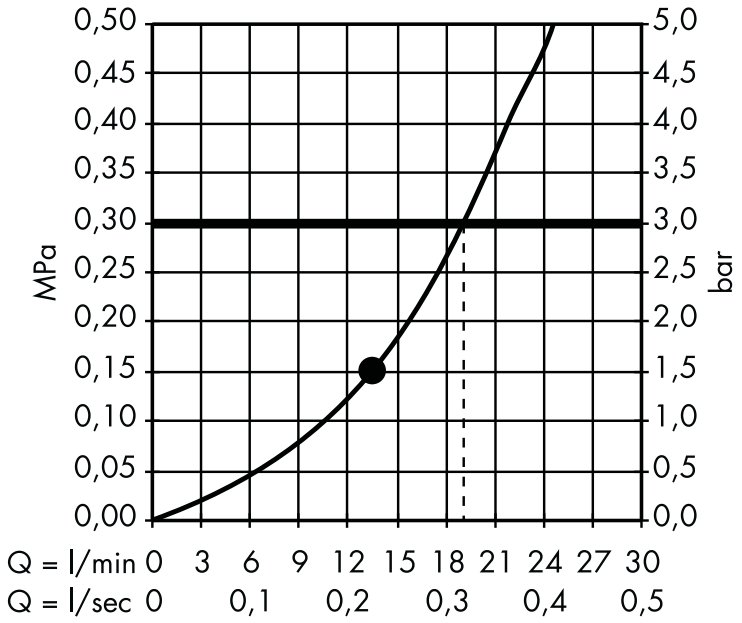

Hand showers	page 582	Overhead showers	page 588
Body showers	page 600	Showerpipes and shower panels	page 600

The consumption was measured in combination with the appropriate fittings (thermostat/mixer/in-wall valve) to reflect actual application in practice.

Hand showers

· **Rainfinity** Hand shower 130 3jet
 # 26864000, 26864140, 26864340, 26864670, 26864700, 26864990

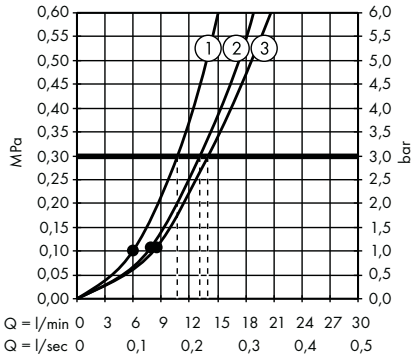

1. Mono
2. Intense PowderRain
3. PowderRain

· **Rainfinity** Hand shower 130 3jet EcoSmart
 # 26865000, 26865140, 26865340, 26865670, 26865700, 26865990

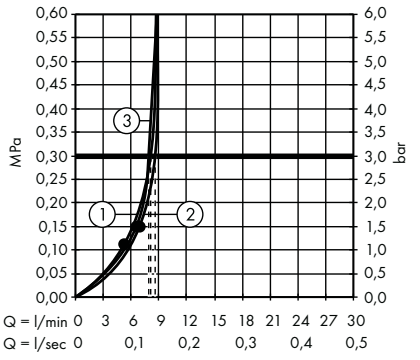

1. Mono
2. Intense PowderRain
3. IntenseRain

· **Rainfinity** Baton hand shower 100 1jet
 # 26866000, 26866140, 26866340, 26866670, 26866700, 26866990

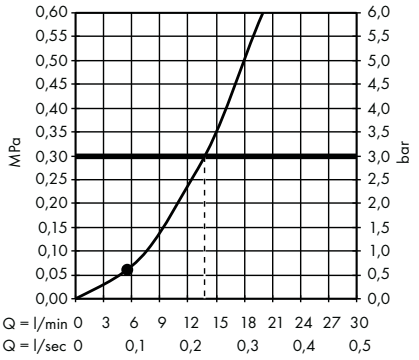

· **Rainfinity** Baton hand shower 100 1jet EcoSmart
 # 26867000, 26867140, 26867340, 26867670, 26867700, 26867990

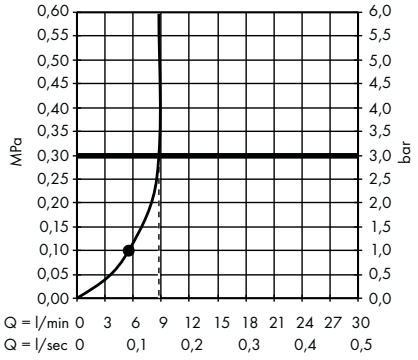

· **Raindance Select E** Hand shower 150 3jet
 # 26550000, 26550400

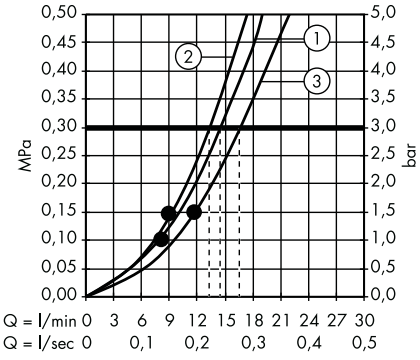

1. RainAir
2. CaresseAir
3. Mix

· **Raindance Select E** Hand shower 150 3jet EcoSmart 9 l/ min
 # 26551000, 26551400

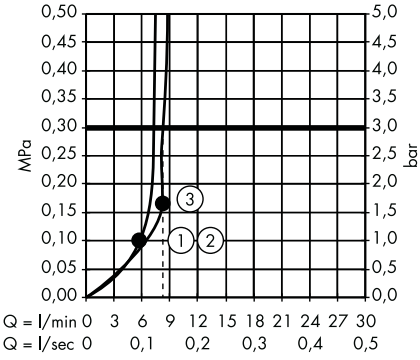

1. RainAir
2. CaresseAir
3. Mix

· **Raindance Select E** Hand shower 120 3jet
 # 26520000, 26520140, 26520340, 26520400, 26520670, 26520700, 26520990

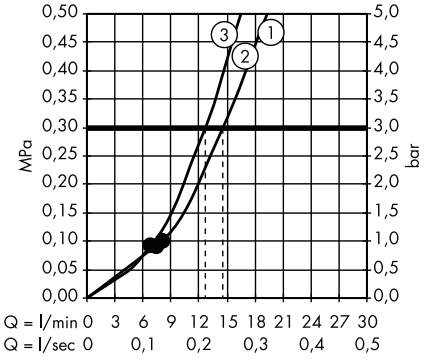

1. RainAir
2. Rain
3. WhirlAir

· **Raindance Select E** Hand shower 120 3jet EcoSmart 9 l/ min
 # 26521000, 26521400

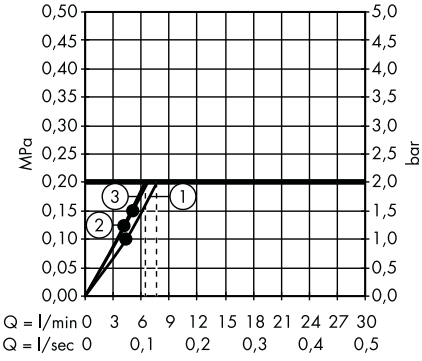

1. RainAir
2. WhirlAir
3. Rain

· **Raindance Select S** Hand shower 150 3jet
 # 28587000, 28587400

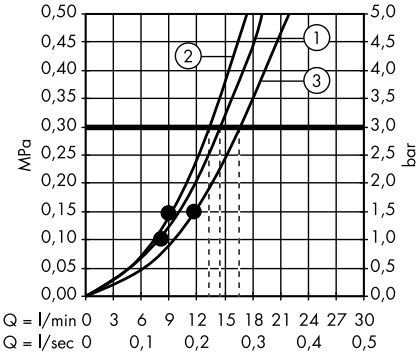

1. RainAir
2. CaresseAir
3. Mix

· **Raindance Select S** Hand shower 150 3jet EcoSmart 9 l/ min
 # 28588000, 28588400

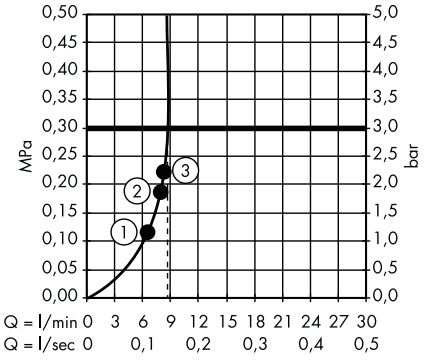

1. RainAir
2. CaresseAir
3. Mix

· **Raindance Select S** Hand shower 120 3jet PowderRain
 # 26014000

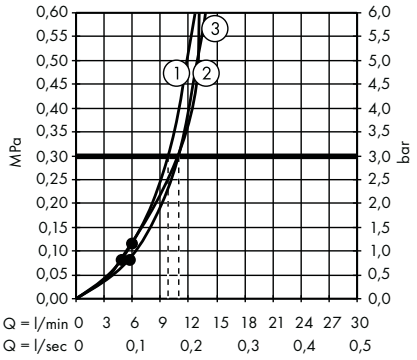

1. WhirlAir
2. PowderRain
3. Rain

· **Raindance Select S** Hand shower 120 3jet
 # 26530000, 26530140, 26530340, 26530400, 26530670, 26530700, 26530990

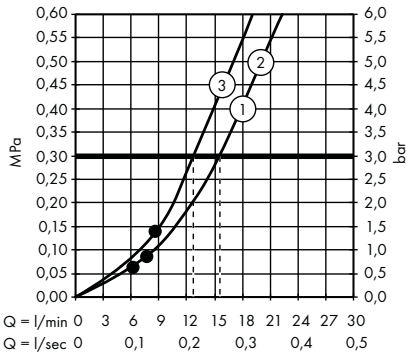

1. RainAir
2. Rain
3. WhirlAir

· **Raindance Select S** Hand shower 120 3jet EcoSmart 9 l/ min
 # 26531000, 26531140, 26531340, 26531400, 26531670, 26531700, 26531990

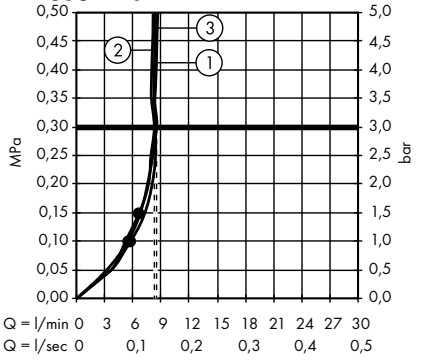

1. RainAir
2. WhirlAir
3. Rain

· **Croma Select E** Hand shower Multi
 # 26810400

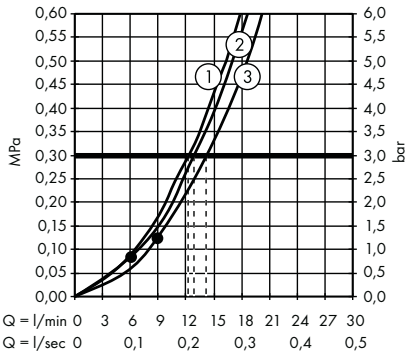

1. Massage
2. IntenseRain
3. SoftRain

· **Croma Select E** Hand shower Multi EcoSmart 9 l/ min
 # 26811400

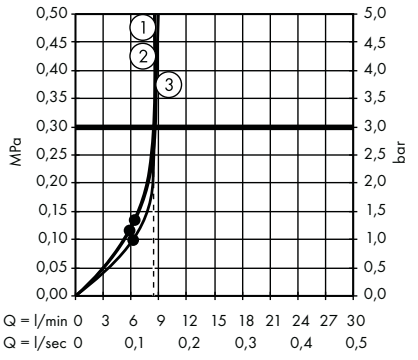

1. IntenseRain
2. Massage
3. SoftRain

· **Croma Select E** Hand shower Vario
 # 26812400

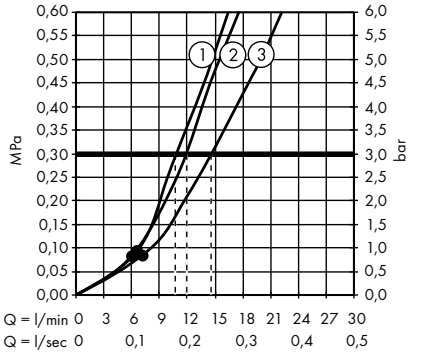

1. TurboRain
2. IntenseRain
3. Rain

· **Croma Select E** Hand shower Vario EcoSmart 9 l/ min
 # 26813400

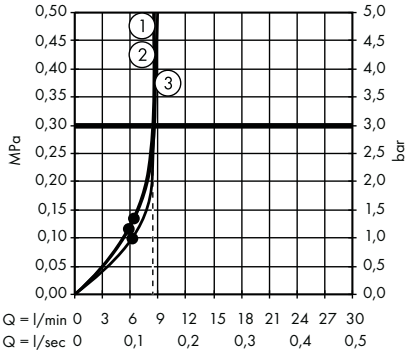

1. TurboRain
2. IntenseRain
3. Rain

· **Croma Select E** Hand shower 1jet
 # 26814400

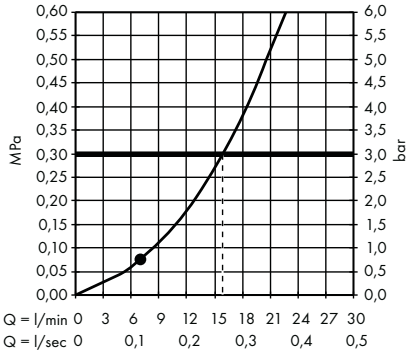

The consumption was measured in combination with the appropriate fittings (thermostat/mixer/in-wall valve) to reflect actual application in practice.

· **Croma Select E** Hand shower 1jet
EcoSmart 9 l/ min
 # 26815400

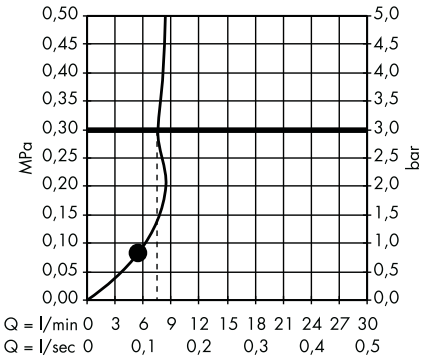

· **Croma Select E** Hand shower 1jet
EcoSmart 7 l/ min
 # 26816400

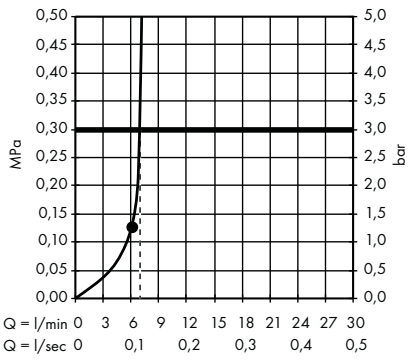

· **Croma Select S** Hand shower Multi
 # 26800400

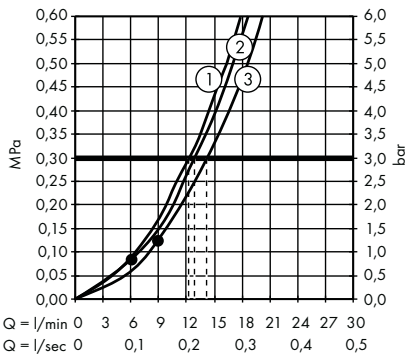

1. Massage
2. IntenseRain
3. SoftRain

· **Croma Select S** Hand shower Multi
EcoSmart 9 l/ min
 # 26801400

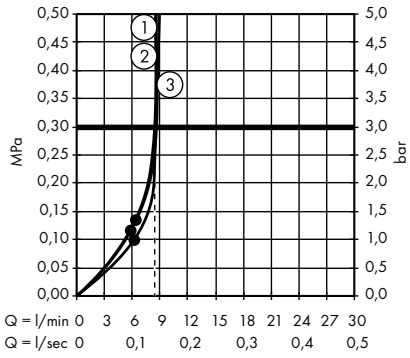

1. IntenseRain
2. Massage
3. SoftRain

· **Croma Select S** Hand shower Vario
 # 26802400

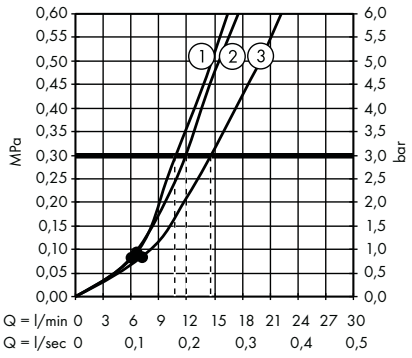

1. TurboRain
2. IntenseRain
3. Rain

· **Croma Select S** Hand shower Vario
EcoSmart 9 l/ min
 # 26803400

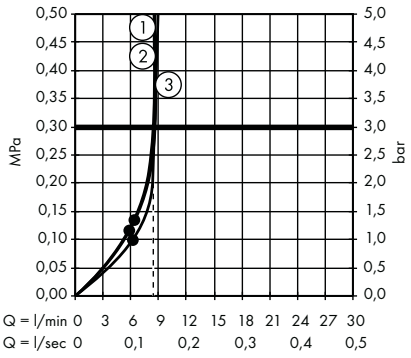

1. TurboRain
2. IntenseRain
3. Rain

· **Croma Select S** Hand shower 1jet
 # 26804400

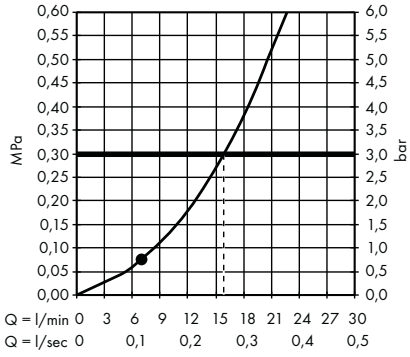

· **Croma Select S** Hand shower 1jet
EcoSmart 9 l/ min
 # 26805400

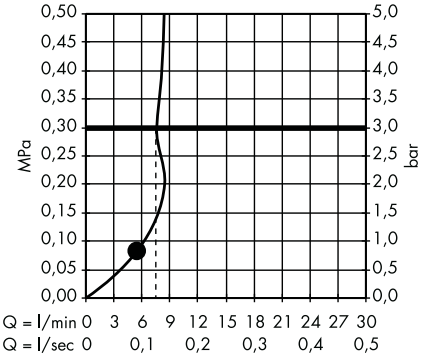

· **Croma Select S** Hand shower 1jet
EcoSmart 7 l/ min
 # 26806400

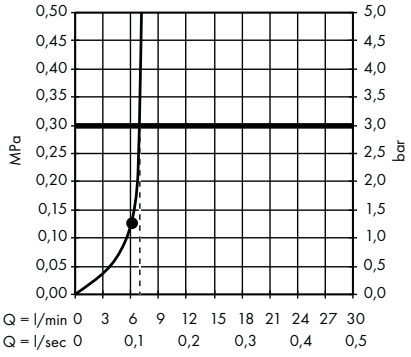

· **PuraVida** Hand shower 150 3jet
 # 28557000, 28557400

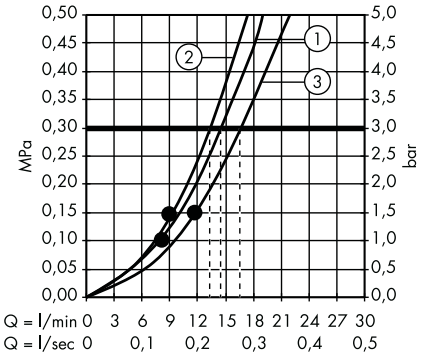

1. RainAir
2. CaresseAir
3. Mix

· **PuraVida** Hand shower 3jet EcoSmart 9 l/ min
 # 28567000, 28567400

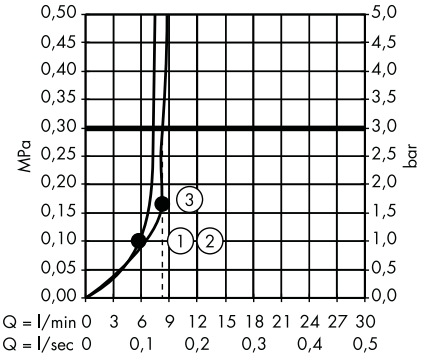

1. RainAir
2. CaresseAir
3. Mix

· **PuraVida** Baton hand shower 120 1jet
 # 28558000, 28558400

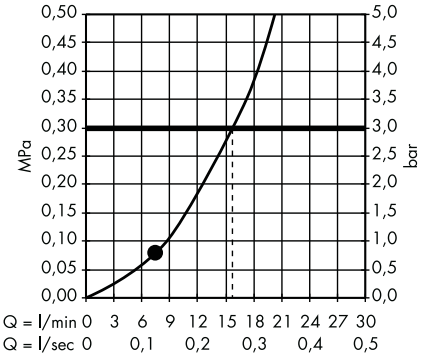

· **PuraVida** Baton hand shower 120 1jet EcoSmart 9 l/ min
 # 28568000, 28568400

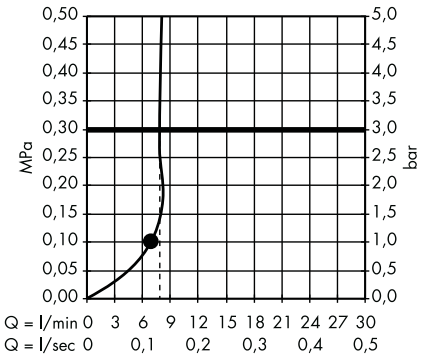

· **Raindance Classic** Hand shower 100 3jet
 # 28548000, 28548090

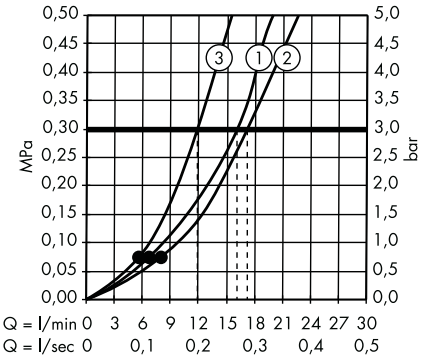

1. RainAir
2. WhirlAir
3. BalanceAir

· **Croma 100** Hand shower Multi
 # 28536000, 28536330, 28536430, 28536450, 28536460, 28536610, 28536710, 28536810, 28536880

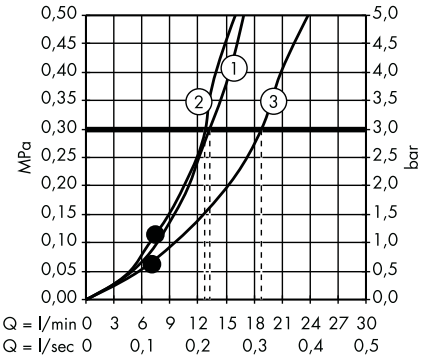

1. Mono
2. Massage
3. Rain

· **Croma 100** Hand shower Multi EcoSmart 9 l/ min
 # 28538000

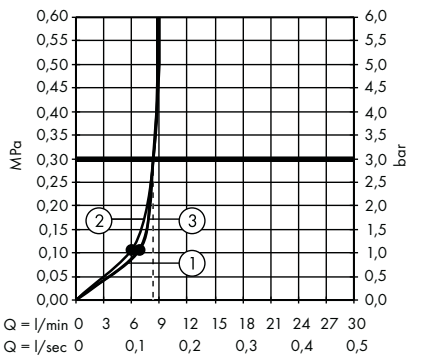

1. Massage
2. Mono
3. Rain

· **Croma 100** Hand shower Vario
 # 28535000

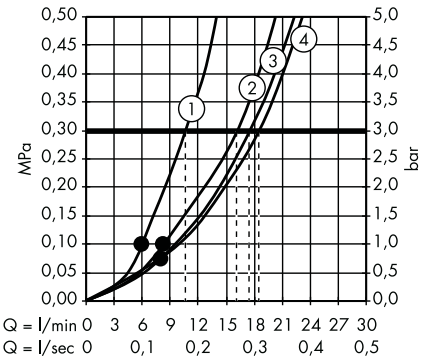

1. Massage
2. Shampoo
3. Normal
4. Rain

· **Croma 100** Hand shower Vario EcoSmart 9 l/ min
 # 28537000

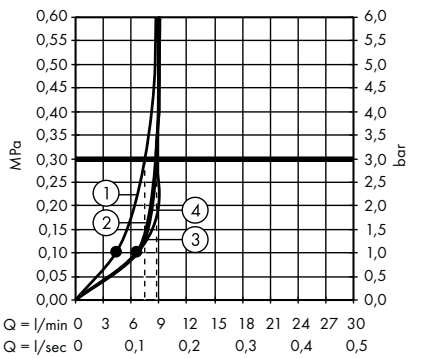

1. Massage
2. Shampoo
3. Normal
4. Rain

The consumption was measured in combination with the appropriate fittings (thermostat/mixer/in-wall valve) to reflect actual application in practice.

· **Croma 100** Hand shower 1jet
 # 28580000

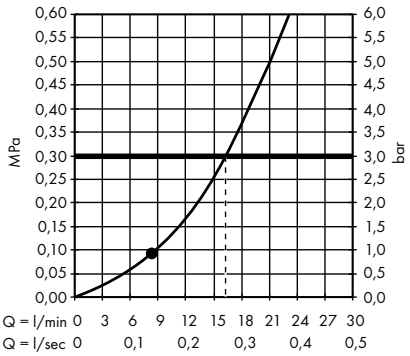

· **Croma 100** Hand shower Mono EcoSmart 9 l/ min
 # 28583000

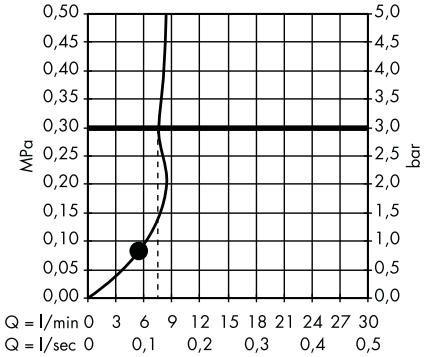

· **Croma 100 Classic** Hand shower Multi
 # 28539000

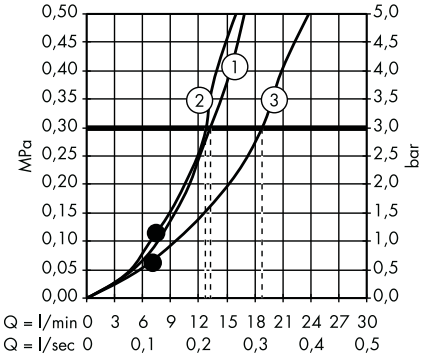

1. Mono
2. Massage
3. Rain

· **Crometta 100** Hand shower Multi
 # 26823400

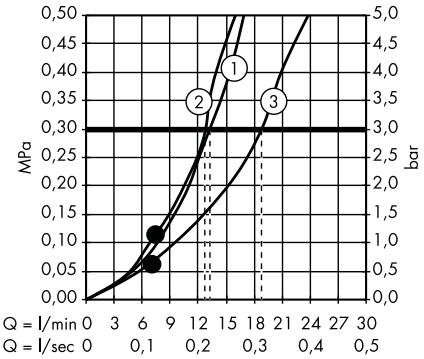

1. TurboRain
2. Massage
3. Rain

· **Crometta 100** Hand shower Vario
 # 26824400

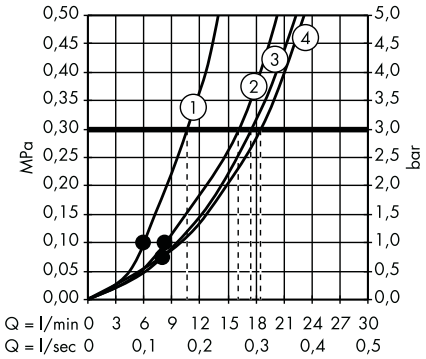

1. Massage
2. Shampoo
3. Normal
4. Rain

· **Crometta 100** Hand shower Vario EcoSmart 9 l/ min
 # 26827400

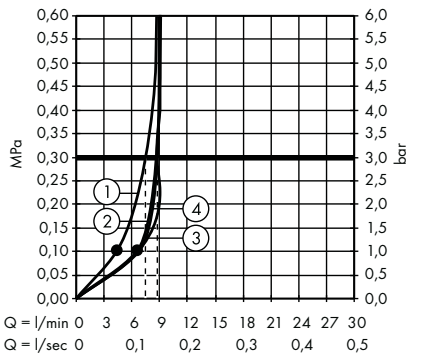

1. Massage
2. Shampoo
3. Normal
4. Rain

· **Crometta 100** Hand shower Vario EcoSmart 6 l/ min
 # 26834400

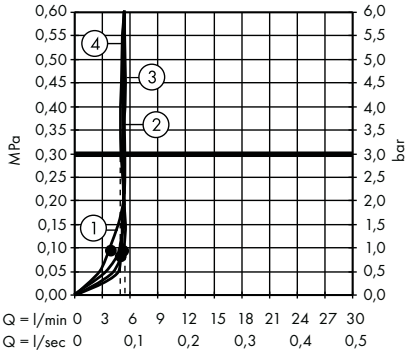

1. Massage spray
2. Shampoo spray
3. Normal spray
4. Rain

· **Crometta 100** Hand shower 1jet
 # 26825400

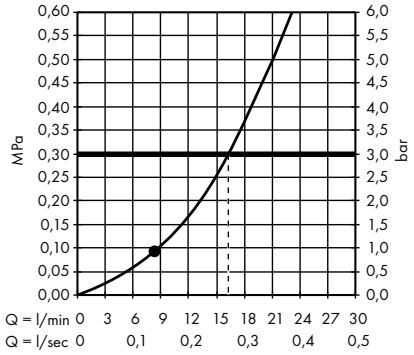

· **Crometta 100** Hand shower 1jet EcoSmart 9 l/ min
 # 26828400

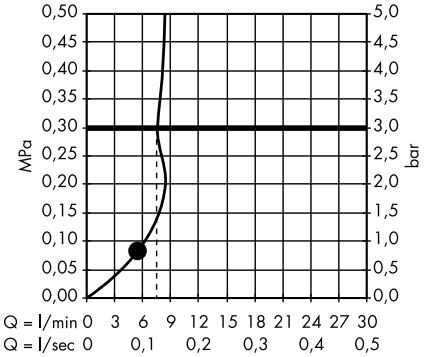

· **Crometta** Hand shower Vario
 # 26330400

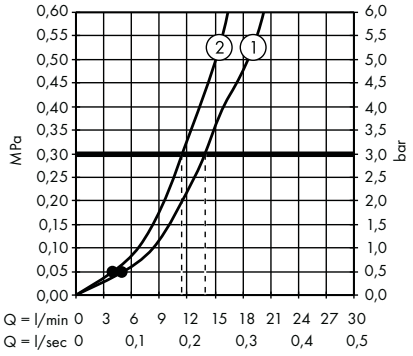

1. Rain
2. IntenseRain

· **Crometta** Hand shower Vario Green 6 l/ min
 # 26336400

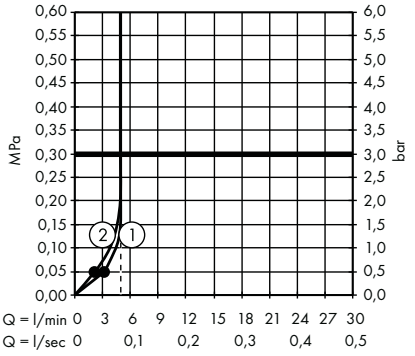

1. Rain
2. IntenseRain

· **Crometta** Hand shower Vario EcoSmart 9 l/ min
 # 26332400

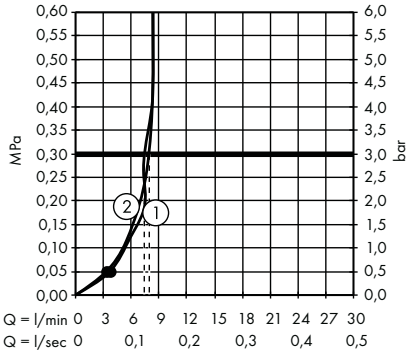

1. Rain
2. IntenseRain

· **Crometta** Hand shower 1jet
 # 26331400

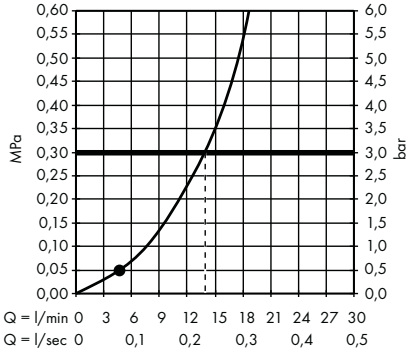

· **Crometta** Hand shower 1jet Green 6 l/ min
 # 26334400

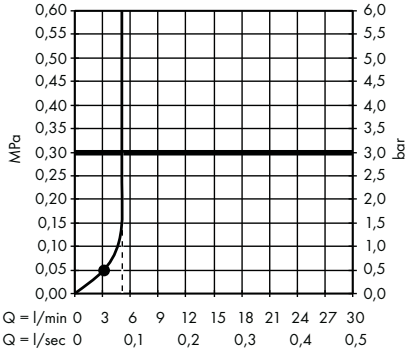

· **Crometta** Hand shower 1jet EcoSmart 9 l/ min
 # 26333400

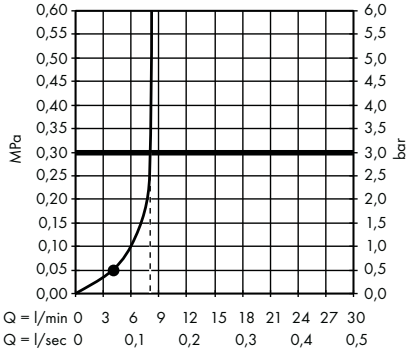

· **Crometta 85** Hand shower Multi
 # 28563000

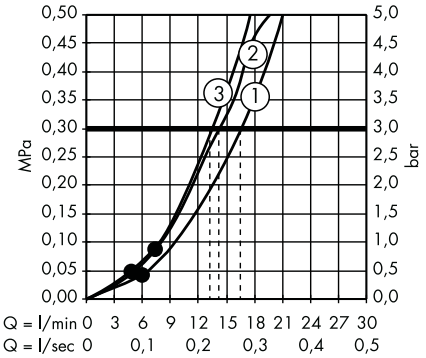

1. Normal
2. Massage
3. Mono

· **Crometta 85** Hand shower Vario
 # 28562000

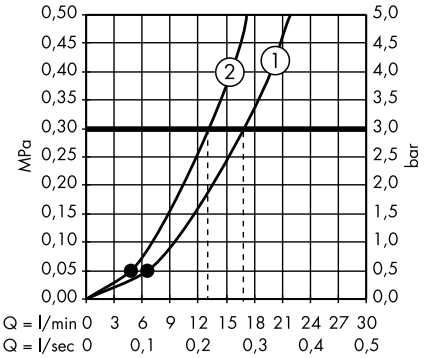

1. Normal
2. Vario

· **Crometta 85** Hand shower Mono
 # 28585000

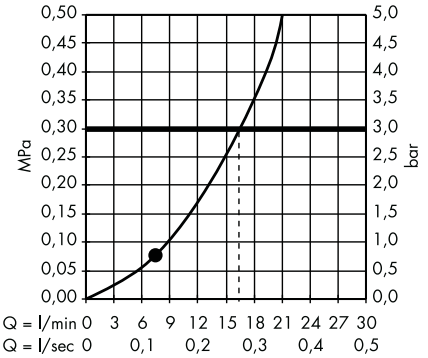

The consumption was measured in combination with the appropriate fittings (thermostat/mixer/in-wall valve) to reflect actual application in practice.

· **Crometta 85** Hand shower Mono Green 6 l/ min
 # 28561000

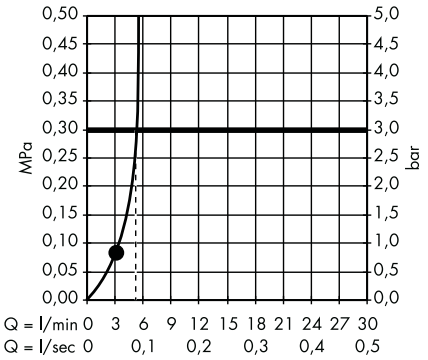

· Bidette hand shower 1jet with shower holder and pressure shower hose 125 cm
 # 32129000

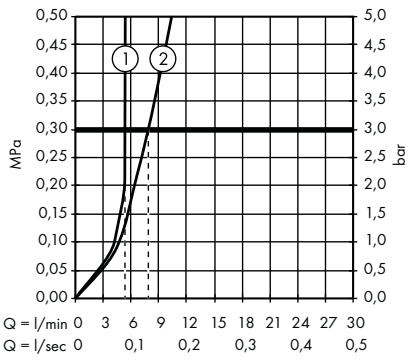

1. With flow limiter
2. Without flow limiter

· Bidette hand shower 1jet with shower holder and pressure shower hose 160 cm
 # 32128000

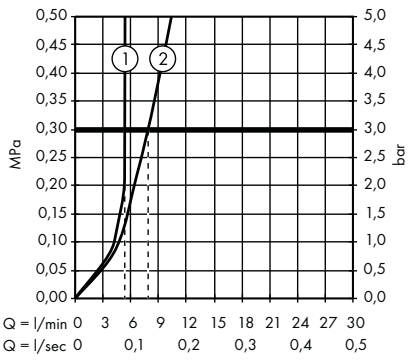

1. With flow limiter
2. Without flow limiter

· Bidette hand shower 1jet with shower holder and pressure resistant shower hose 125 cm
 # 32127000

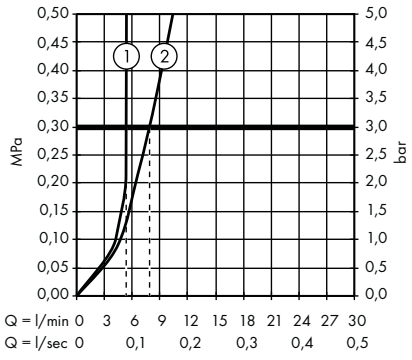

1. With flow limiter
2. Without flow limiter

Overhead showers

· **Rainfinity** Overhead shower 250 1jet with wall connector
 # 26226000, 26226700

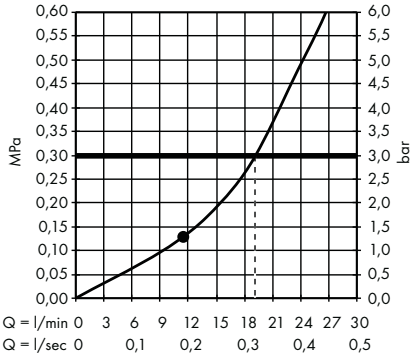

· **Rainfinity** Overhead shower 250 1jet EcoSmart with wall connector
 # 26227000, 26227700

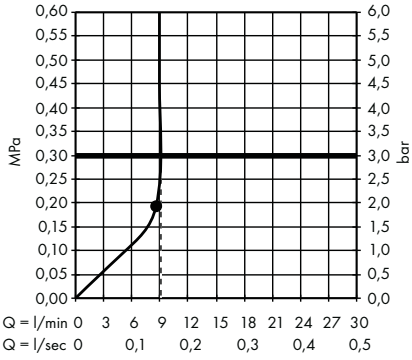

· **Rainfinity** Overhead shower 250 1jet
 # 26228000, 26228140, 26228340, 26228670, 26228700, 26228990

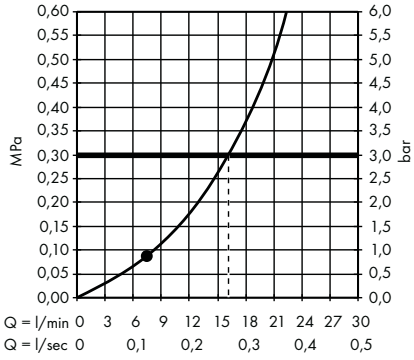

· **Rainfinity** Overhead shower 250 1jet EcoSmart
 # 26229000, 26229140, 26229340, 26229670, 26229700, 26229990

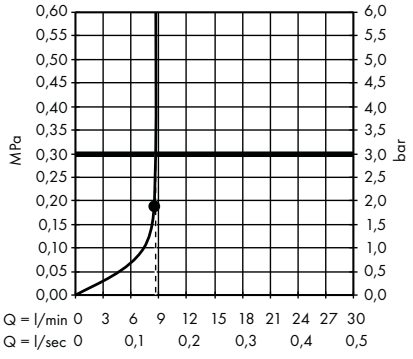

· **Rainfinity** Overhead shower 360 1jet with wall connector
 # 26230000, 26230140, 26230340, 26230670, 26230700, 26230990

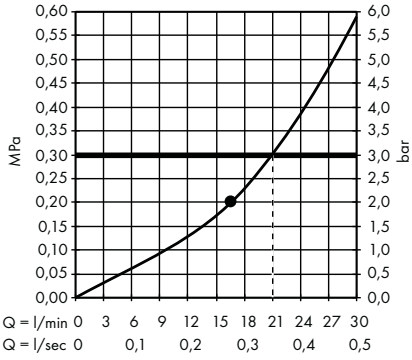

· **Rainfinity** Overhead shower 360 1jet
 # 26231000, 26231140, 26231340, 26231670, 26231700, 26231990

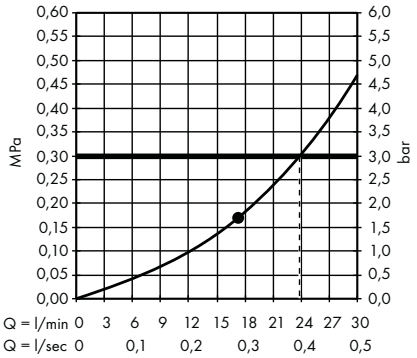

· **Rainfinity** Overhead shower 250 3jet with wall connector
 # 26232000, 26232700

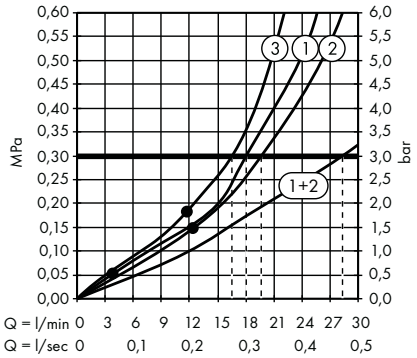

1. Intense PowderRain
2. PowderRain
3. RainStream

· **Rainfinity** Overhead shower 250 3jet EcoSmart with wall connector
 # 26233000, 26233700

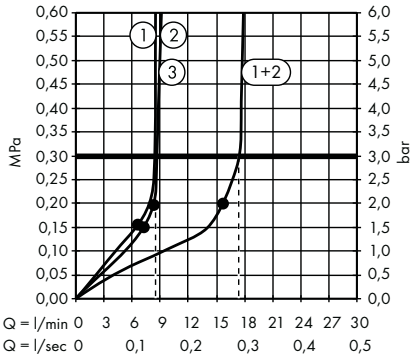

1. RainStream
2. PowderRain
3. Intense PowderRain

· **Rainfinity** Overhead shower 360 3jet with wall connector
 # 26234000, 26234140, 26234340, 26234670, 26234700, 26234990

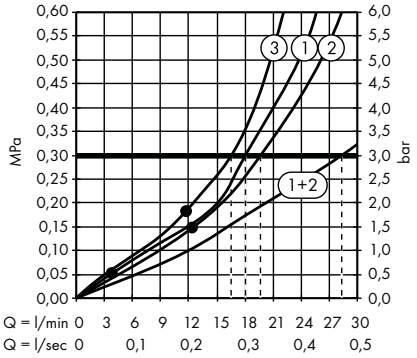

1. Intense PowderRain
2. PowderRain
3. RainStream

· **Rainmaker Select** Overhead shower 580 3jet
 # 24001400, 24001600

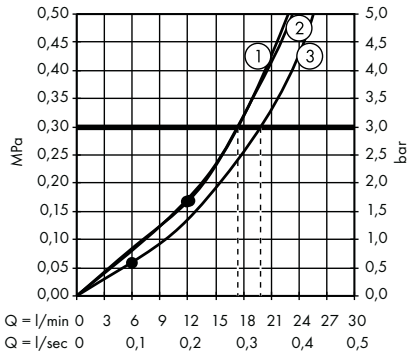

1. Rain
2. Rainflow
3. Mono

· **Rainmaker Select** Overhead shower 580 3jet EcoSmart 9 l/ min
 # 24011400

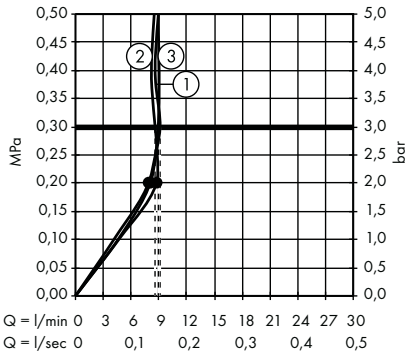

1. Rain
2. Rainflow
3. Mono

· **Rainmaker Select** Overhead shower 460 3jet with shower arm
 # 24007400, 24007600

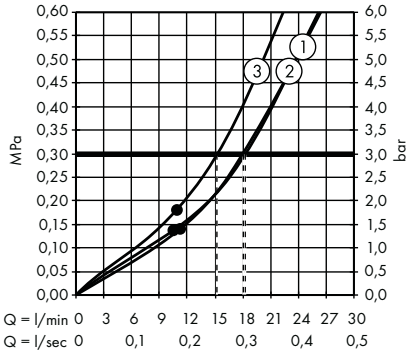

1. Mono
2. Rain
3. RainStream

· **Rainmaker Select** Overhead shower 460 3jet EcoSmart 9 l/ min with shower arm
 # 24017400

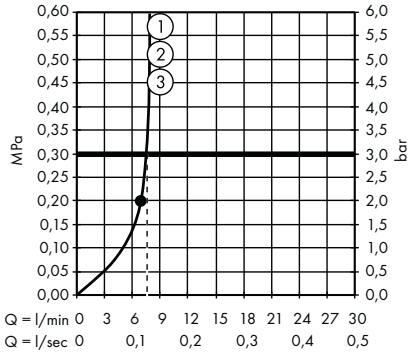

· **Rainmaker Select** Overhead shower 460 3jet with ceiling connector
 # 24006400, 24006600

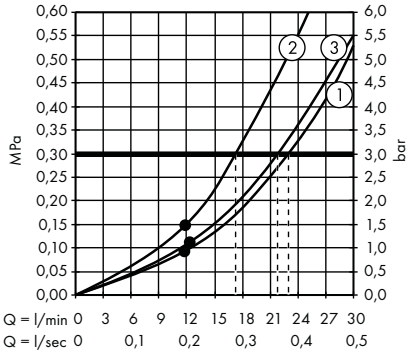

1. Mono
2. Rain
3. RainStream

The consumption was measured in combination with the appropriate fittings (thermostat/mixer/in-wall valve) to reflect actual application in practice.

· **Rainmaker Select** Overhead shower 460 3jet EcoSmart 9 l/ min with ceiling connector
 # 24016400

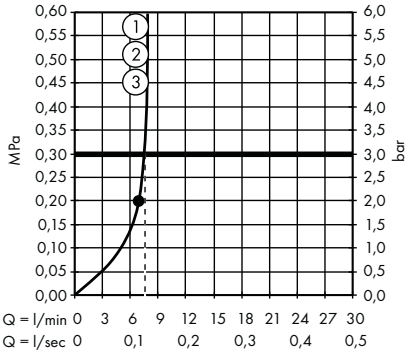

1. Rain
2. RainStream
3. Mono

· **Rainmaker Select** Overhead shower 460 2jet with shower arm
 # 24005400, 24005600

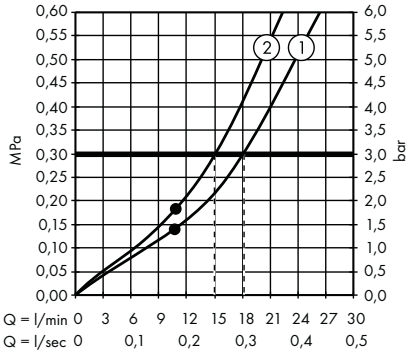

1. Rain
2. RainStream

· **Rainmaker Select** Overhead shower 460 2jet EcoSmart 9 l/ min with shower arm
 # 24015400

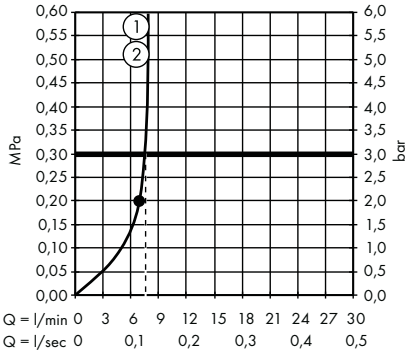

1. Rain
2. RainStream

· **Rainmaker Select** Overhead shower 460 2jet with ceiling connector
 # 24004400, 24004600

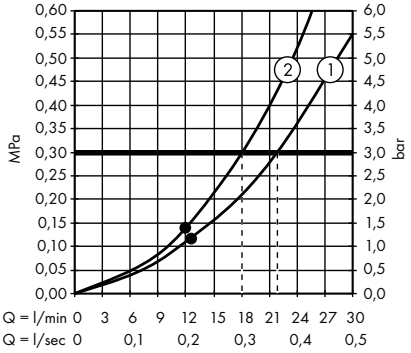

1. Rain
2. RainStream

· **Rainmaker Select** Overhead shower 460 2jet EcoSmart 9 l/ min with ceiling connector
 # 24014400

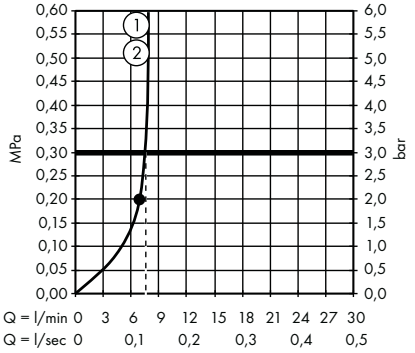

1. Rain
2. RainStream

· **Rainmaker Select** Overhead shower 460 1jet with shower arm
 # 24003400, 24003600

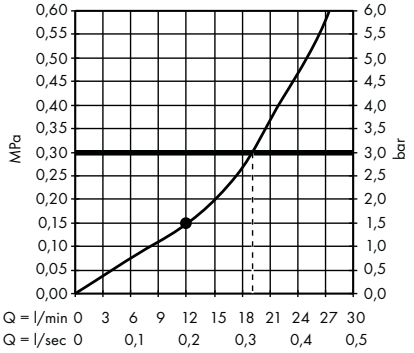

· **Rainmaker Select** Overhead shower 460 1jet EcoSmart 9 l/ min with shower arm
 # 24013400

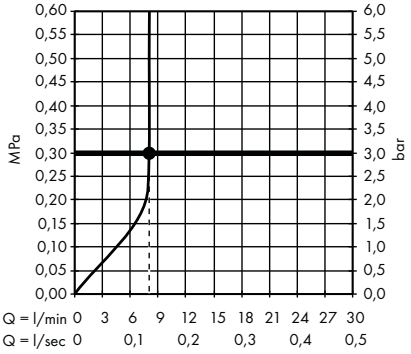

· **Rainmaker Select** Overhead shower 460 1jet with ceiling connector
 # 24002400, 24002600

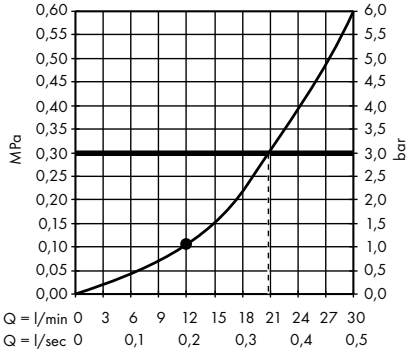

· **Rainmaker Select** Overhead shower 460 1jet EcoSmart 9 l/ min with ceiling connector
 # 24012400

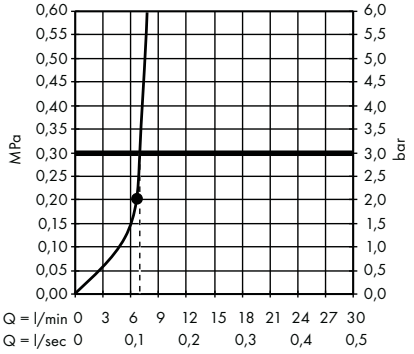

· **Raindance Select E** Overhead shower 300 3jet with shower arm
 # 26468000, 26468400

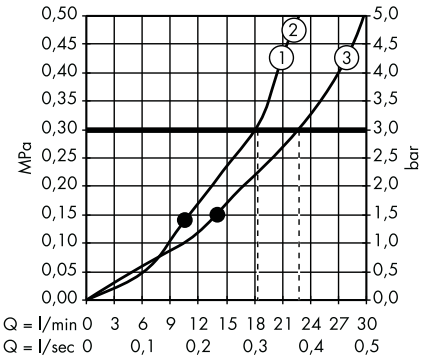

1. Rain
2. RainAir
3. RainStream

· **Raindance Select E** Overhead shower 300 2jet with ceiling connector
 # 27384000, 27384400

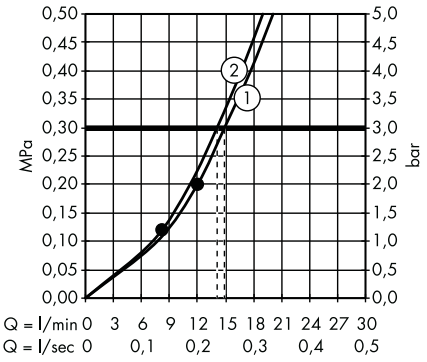

1. Rain
2. RainAir

· **Raindance Select E** Overhead shower 300 2jet EcoSmart 9 l/ min with ceiling connector
 # 26608000, 26608400

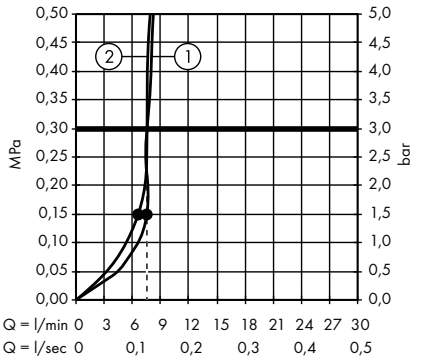

1. Rain
2. RainAir

· **Raindance Select E** Overhead shower 300 2jet with shower arm
 # 27385000, 27385400

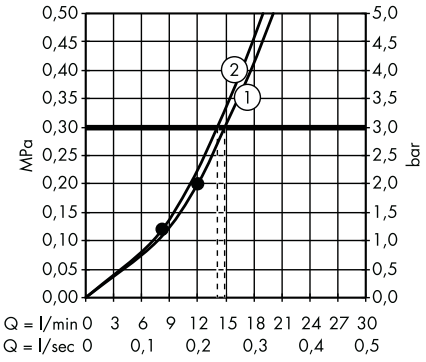

1. Rain
2. RainAir

· **Raindance Select E** Overhead shower 300 2jet EcoSmart 9 l/ min with shower arm
 # 26609000, 26609400

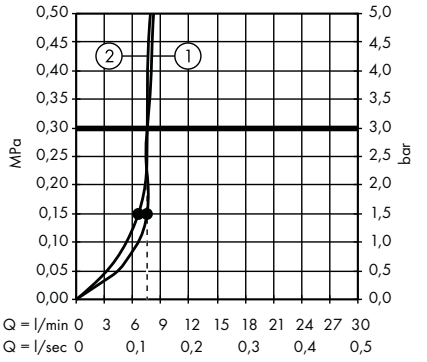

1. Rain
2. RainAir

· **Raindance Select S** Overhead shower 300 2jet with ceiling connector
 # 27337000, 27337400

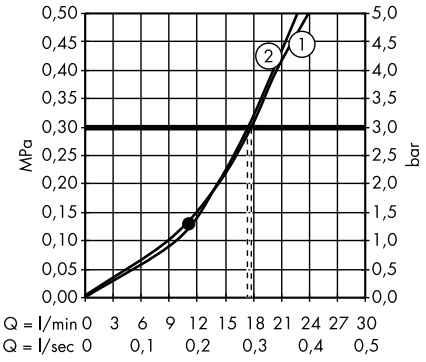

1. Rain
2. RainAir

· **Raindance Select S** Overhead shower 300 2jet with shower arm
 # 27378000, 27378400

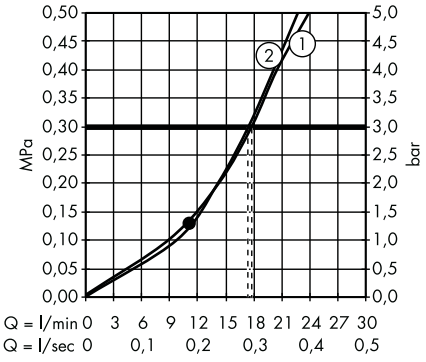

1. Rain
2. RainAir

· **Raindance Select S** Overhead shower 240 2jet with ceiling connector
 # 26467000, 26467400

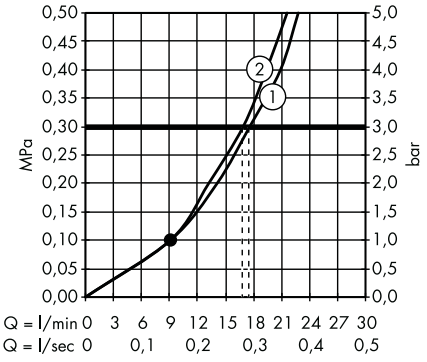

1. Rain
2. RainAir

· **Raindance Select S** Overhead shower 240 2jet EcoSmart 9 l/ min with ceiling connector
 # 26469000

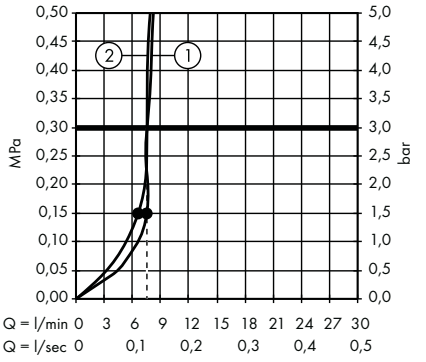

1. Rain
2. RainAir

The consumption was measured in combination with the appropriate fittings (thermostat/mixer/in-wall valve) to reflect actual application in practice.

· **Raindance Select S** Overhead shower 240 2jet with shower arm
 # 26466000, 26466400

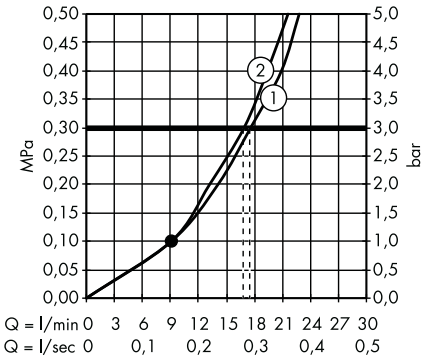

1. Rain
2. RainAir

· **Raindance Select S** Overhead shower 240 2jet EcoSmart 9 l/ min with shower arm
 # 26470000, 26470400

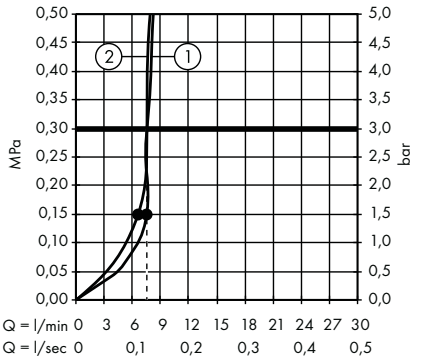

1. Rain
2. RainAir

· **Croma Select E** Overhead shower 180 2jet
 # 26524000, 26524400

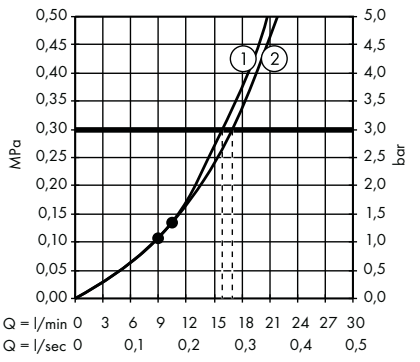

1. IntenseRain
2. Rain

· **Croma Select E** Overhead shower 180 2jet EcoSmart 9 l/ min
 # 26528000, 26528400

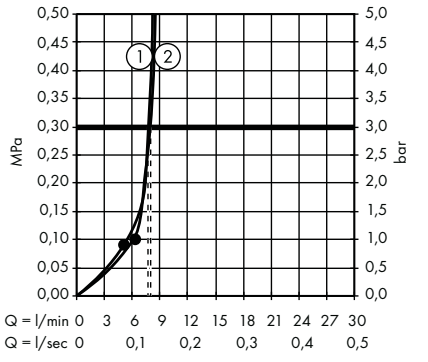

1. IntenseRain
2. Rain

· **Croma Select S** Overhead shower 180 2jet
 # 26522000, 26522400

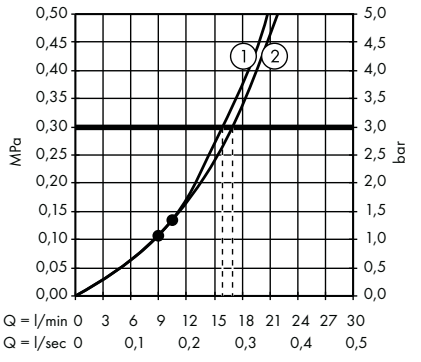

1. IntenseRain
2. Rain

· **Croma Select S** Overhead shower 180 2jet EcoSmart 9 l/ min
 # 26523000, 26523400

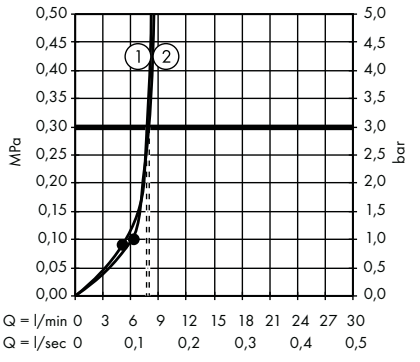

1. IntenseRain
2. Rain

· **PuraVida** Overhead shower 400 1jet with ceiling connector
 # 27390000, 27390400

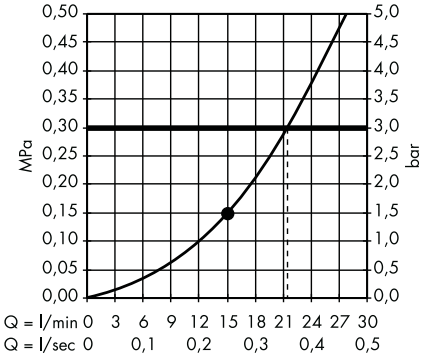

· **PuraVida** Overhead shower 400 1jet with shower arm
 # 27437000, 27437400

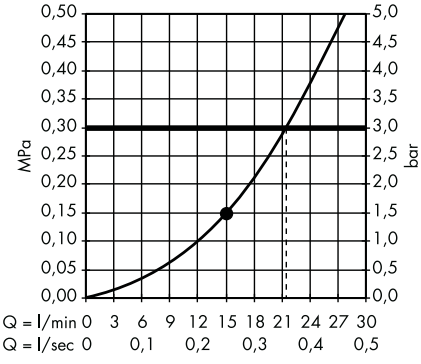

· **Raindance Rainmaker** Overhead shower 680/460 3jet with lighting
 # 28418000

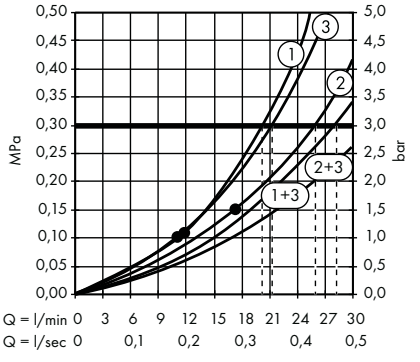

1. RainAir
2. RainAir XXL
3. WhirlAir

· **Raindance Rainmaker** Overhead shower 600 3jet with lighting
 # 26117000

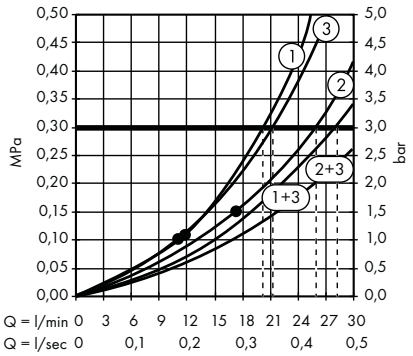

1. RainAir
2. RainAir XXL
3. WhirlAir

· **Raindance** Overhead shower 260/260 1jet
 # 26472000

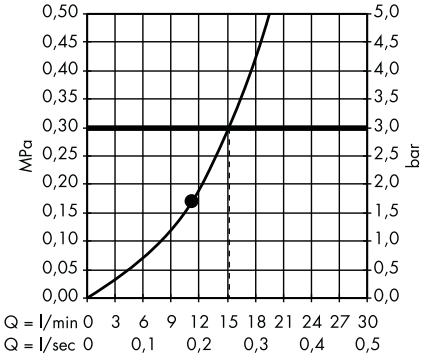

· **Raindance** Overhead shower 260/260 1jet EcoSmart 9 l/ min
 # 26481000

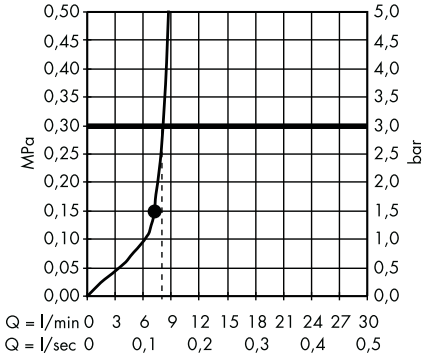

· **Raindance Rainfall** Overhead shower 180 2jet
 # 28433000, 28433400

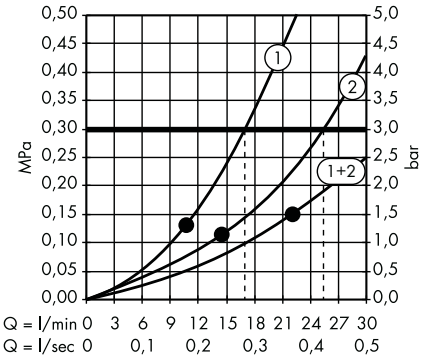

1. RainAir
2. Rainflow

· **Raindance Rainfall** Overhead shower 150 1jet stream
 # 26443000

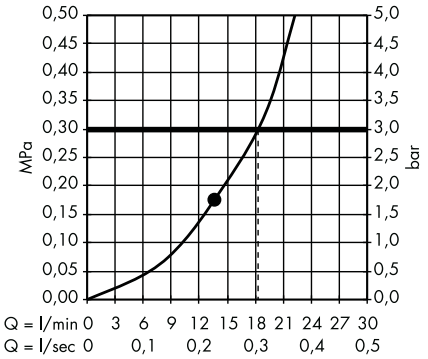

· **Raindance Rainfall** Overhead shower 150 1jet
 # 26442000

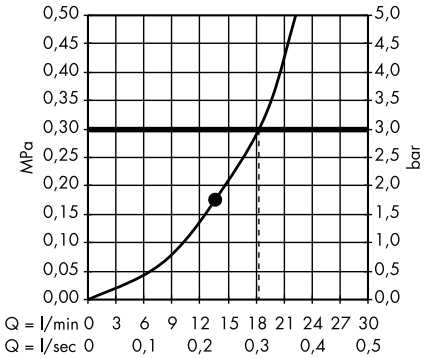

· **Raindance E** Overhead shower 300 1jet with shower arm
 # 26238000, 26238140, 26238340, 26238670, 26238700, 26238990

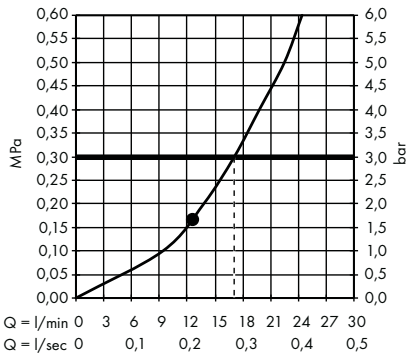

· **Raindance E** Overhead shower 300 1jet EcoSmart 9 l/ min with shower arm
 # 26239000

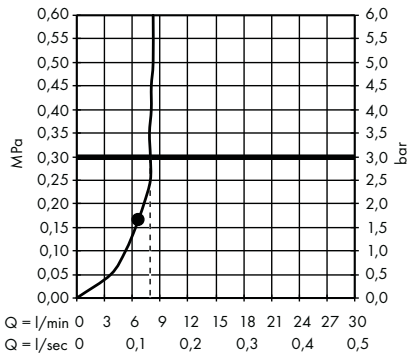

· **Raindance E** Overhead shower 300 1jet with ceiling connector
 # 26250000, 26250140, 26250340, 26250670, 26250700, 26250990

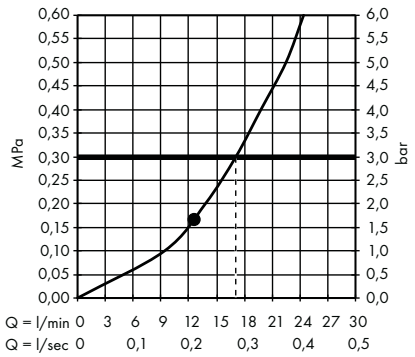

The consumption was measured in combination with the appropriate fittings (thermostat/mixer/in-wall valve) to reflect actual application in practice.

· **Raindance E** Overhead shower 300 1jet EcoSmart 9 l/ min with ceiling connector
 # 26251000

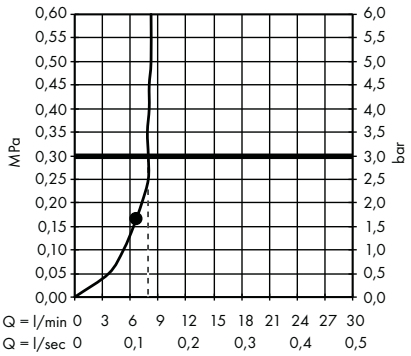

· **Raindance E** Overhead shower 400/400 1jet
 # 26252000

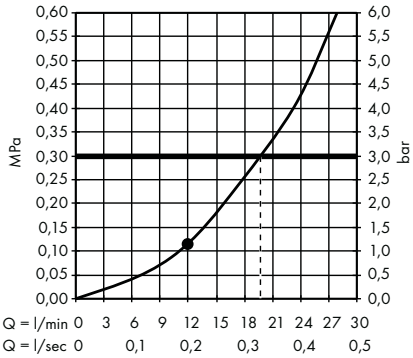

· **Raindance E** Overhead shower 400/400 1jet EcoSmart 9 l/ min
 # 26253000

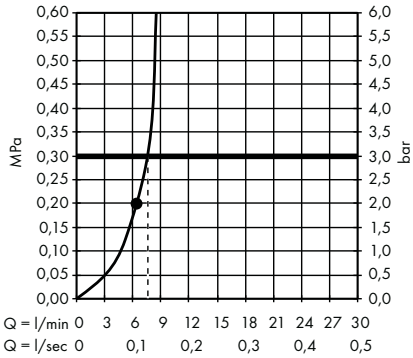

· **Raindance E** Overhead shower 360 1jet with ceiling connector
 # 27381000

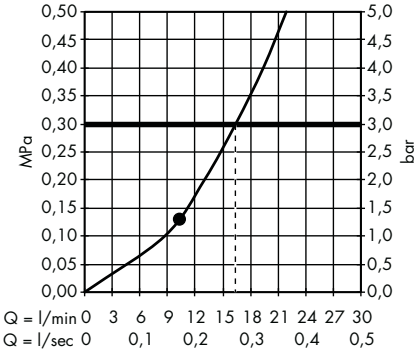

· **Raindance E** Overhead shower 360 1jet EcoSmart 9 l/ min with ceiling connector
 # 26604000

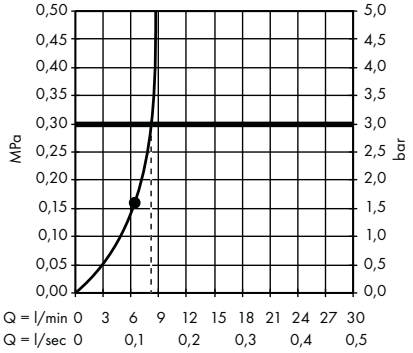

· **Raindance E** Overhead shower 360 1jet with shower arm 24 cm
 # 27371000

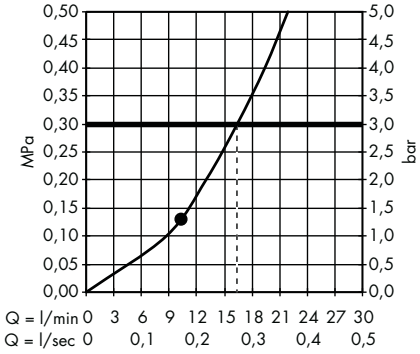

· **Raindance E** Overhead shower 360 1jet with shower arm 39 cm
 # 27376000

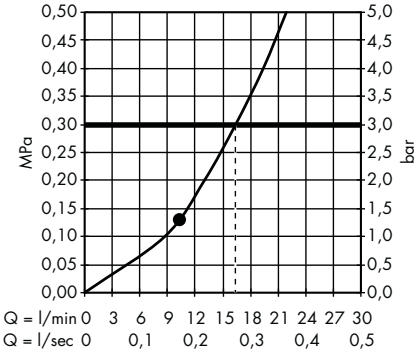

· **Raindance E** Overhead shower 360 1jet EcoSmart 9 l/ min with shower arm
 # 26605000

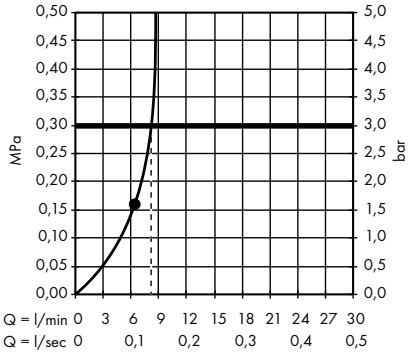

· **Raindance E** Overhead shower 240 1jet with ceiling connector
 # 27380000

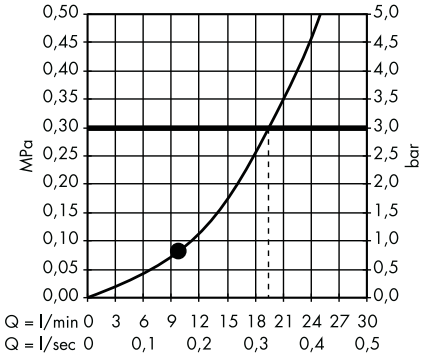

· **Raindance E** Overhead shower 240 1jet EcoSmart 9 l/ min with ceiling connector
 # 27383000

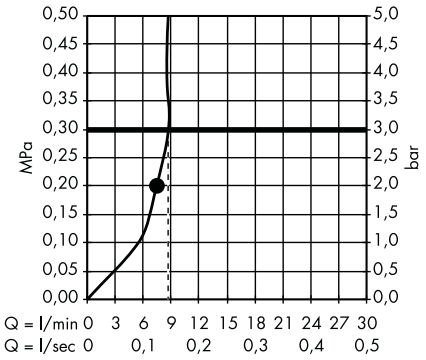

· **Raindance E** Overhead shower 240 1jet with shower arm
 # 27370000

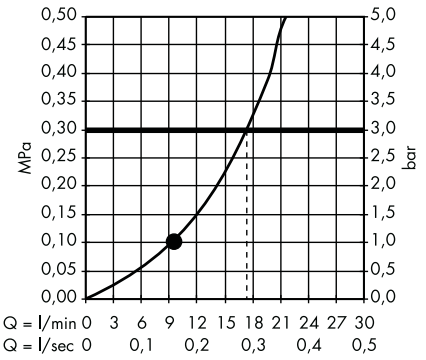

· **Raindance E** Overhead shower 240 1jet EcoSmart 9 l/ min with shower arm
 # 27375000

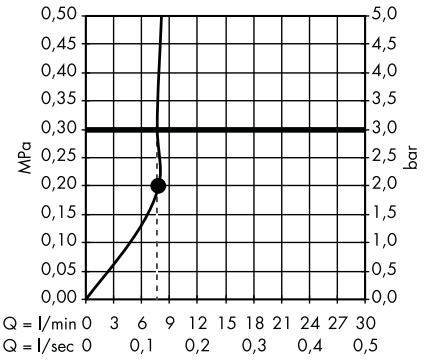

· **Raindance S** Overhead shower 300 1jet with shower arm 46 cm
 # 27492000

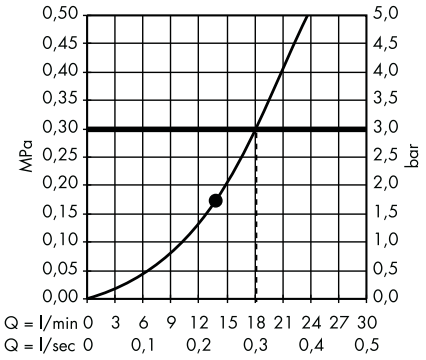

· **Raindance S** Overhead shower 300 1jet with shower arm 39 cm
 # 27493000

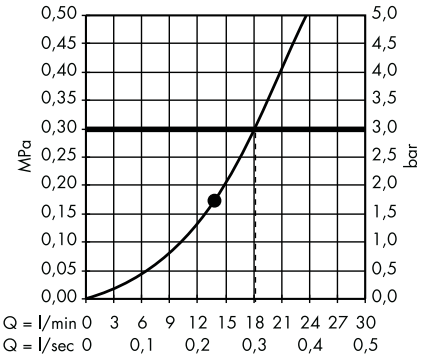

· **Raindance S** Overhead shower 300 1jet EcoSmart 9 l/ min with shower arm
 # 26601000

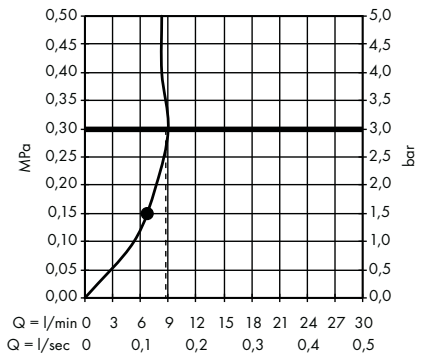

· **Raindance S** Overhead shower 300 1jet with ceiling connector
 # 27494000

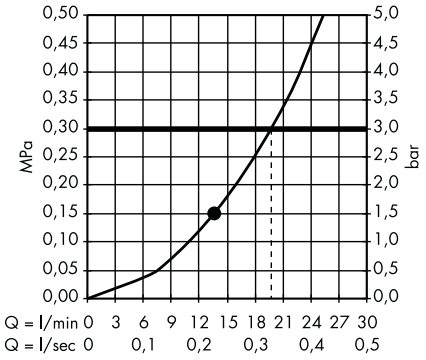

· **Raindance S** Overhead shower 300 1jet EcoSmart 9 l/ min with ceiling connector
 # 26600000

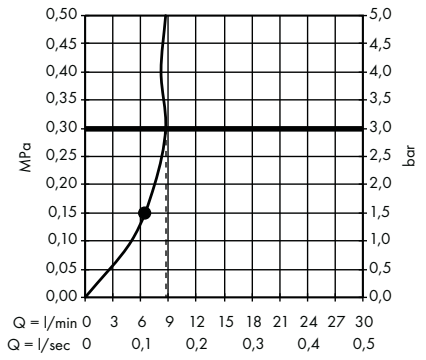

· **Raindance S** Overhead shower 240 1jet PowderRain with ceiling connector
 # 27620000

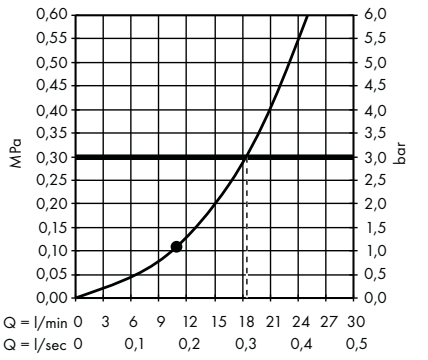

The consumption was measured in combination with the appropriate fittings (thermostat/mixer/in-wall valve) to reflect actual application in practice.

· **Raindance S** Overhead shower 240 1jet PowderRain with shower arm
 # 27607000

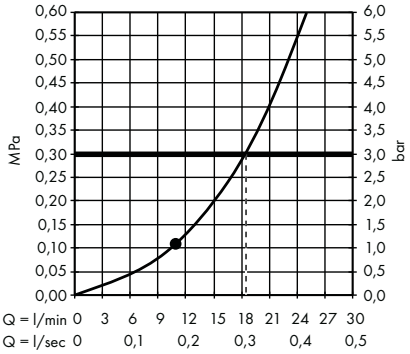

· **Raindance S** Overhead shower 240 1jet PowderRain
 # 27623000

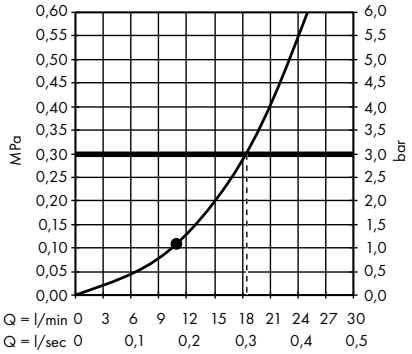

· **Raindance S** Overhead shower 240 1jet with shower arm
 # 27474000

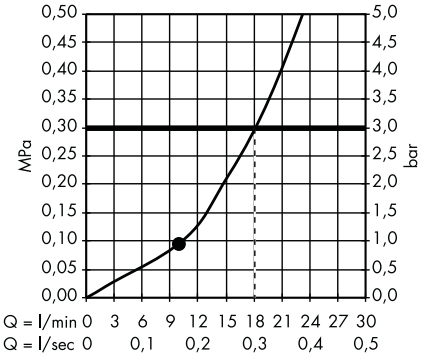

· **Raindance S** Overhead shower 240 1jet EcoSmart 9 l/ min with shower arm
 # 27461000

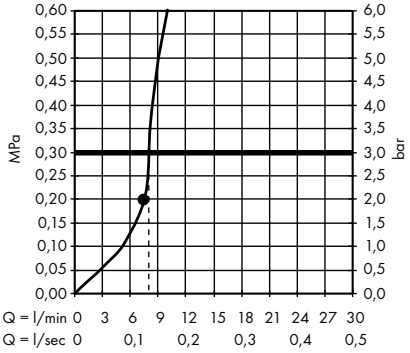

· **Raindance S** Overhead shower 240 1jet with ceiling connector
 # 27477000

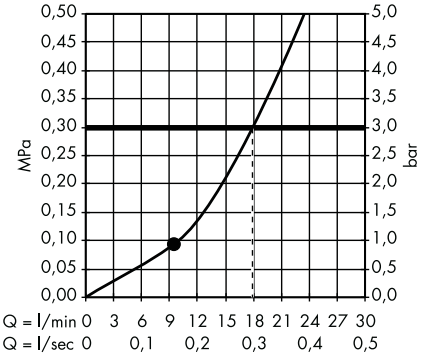

· **Raindance S** Overhead shower 240 1jet EcoSmart 9 l/ min with ceiling connector
 # 27463000

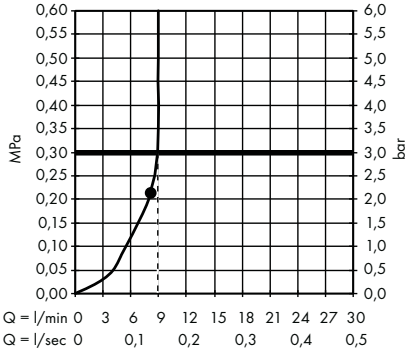

· **Raindance S** Overhead shower 180 1jet with ceiling connector
 # 27478000

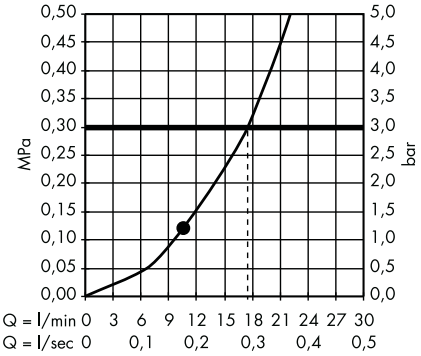

· **Raindance S** Overhead shower 180 1jet EcoSmart 9 l/ min with ceiling connector
 # 27464000

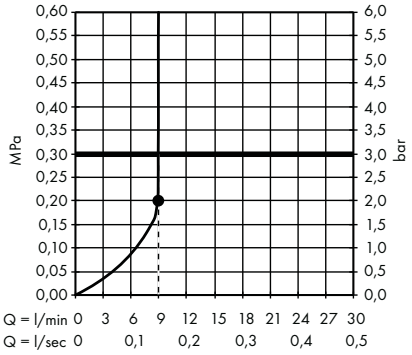

· **Raindance Classic** Overhead shower 240 1jet with shower arm
 # 27424000, 27424090

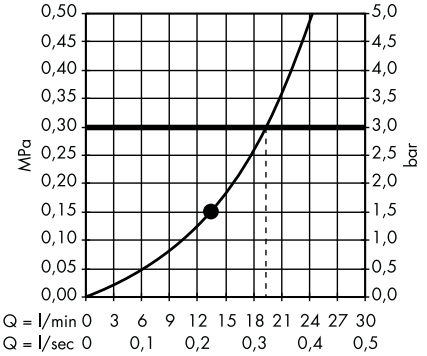

· **Raindance Classic** Overhead shower 240 1jet with ceiling connector
 # 27405000, 27405090

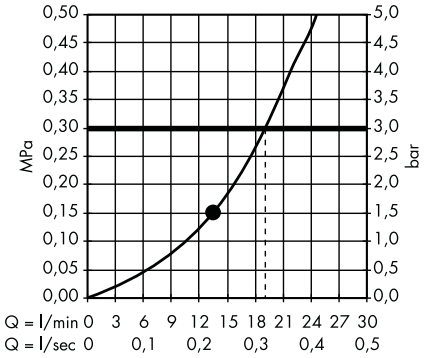

· **Croma E** Overhead shower 280 1jet
 # 26257000

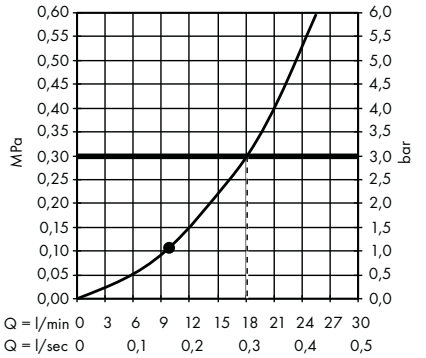

· **Croma E** Overhead shower 280 1jet EcoSmart
 # 26258000

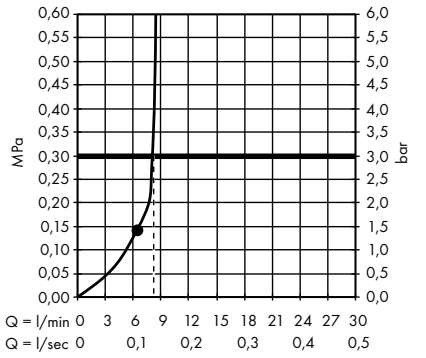

· **Croma** Overhead shower 280 1jet
 # 26220000, 26220140, 26220340, 26220670, 26220700, 26220990

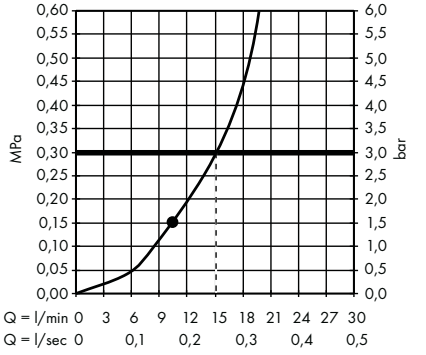

· **Croma** Overhead shower 280 1jet EcoSmart 9 l/ min
 # 26221000, 26221140, 26221340, 26221670, 26221700, 26221990

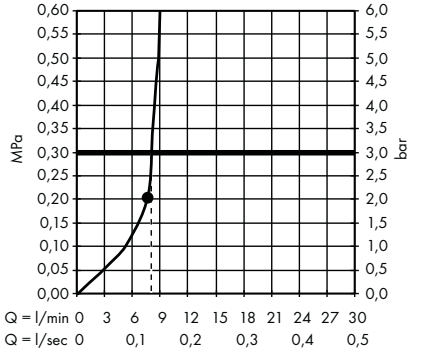

· **Croma** Overhead shower 220 1jet
 # 26464000

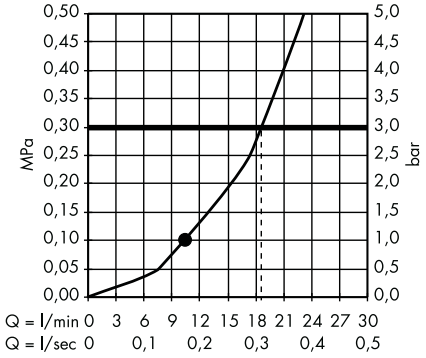

· **Croma** Overhead shower 220 1jet EcoSmart 9 l/ min
 # 26465000

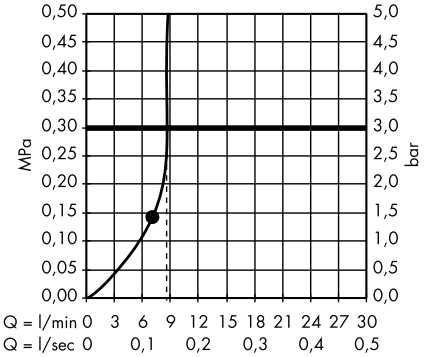

· **Croma** Overhead shower 220 1jet LowPressure
 # 26734000

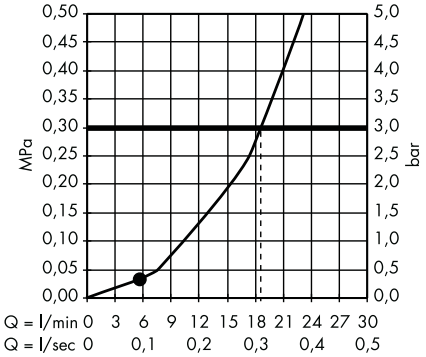

· **Croma** Overhead shower 160 1jet
 # 27450000

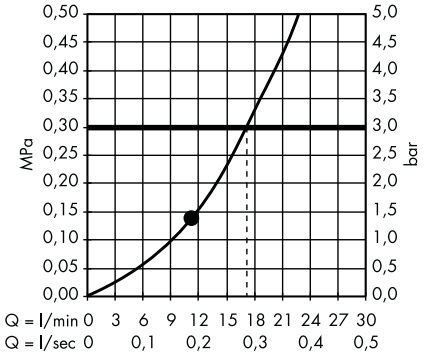

The consumption was measured in combination with the appropriate fittings (thermostat/mixer/in-wall valve) to reflect actual application in practice.

· **Croma 100** Overhead shower Multi
 # 27443000

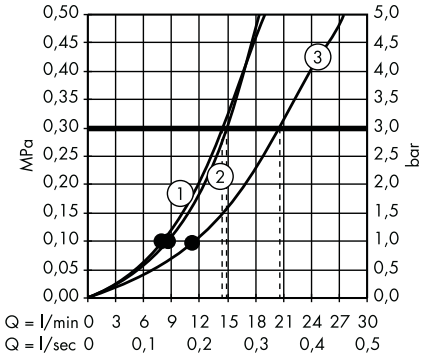

1. Massage
2. Mono
3. Rain

· **Croma 100** Overhead shower Vario
 # 27441000

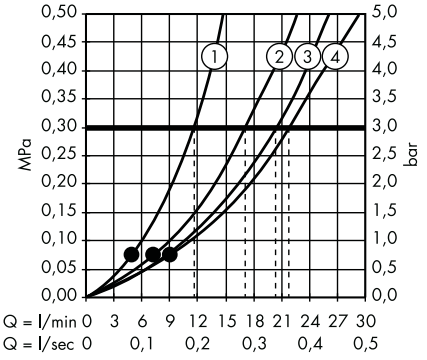

1. Massage
2. Shampoo
3. Normal
4. Rain

· **Croma 100** Overhead shower Vario EcoSmart 9 l/ min
 # 28462000

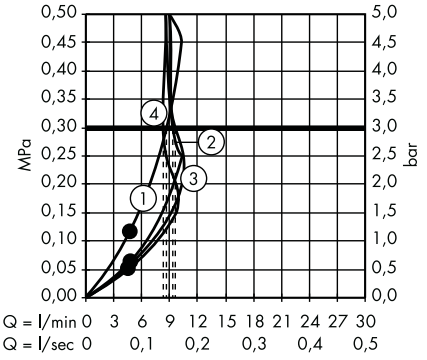

1. Massage
2. Shampoo
3. Normal
4. Rain

· **Crometta E** Overhead shower 240 1jet
 # 26726000

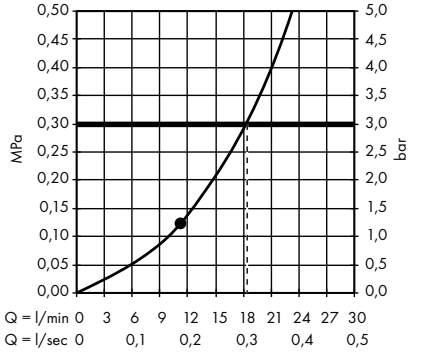

· **Crometta E** Overhead shower 240 1jet EcoSmart 9 l/ min
 # 26727000

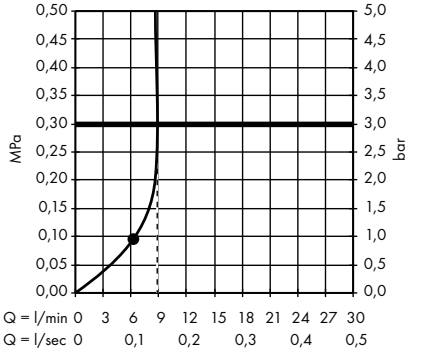

· **Crometta E** Overhead shower 240 1jet LowPressure
 # 26722000

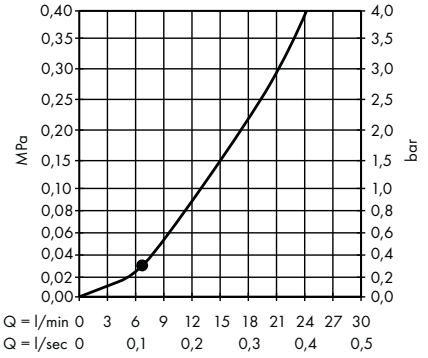

· **Crometta S** Overhead shower 240 1jet
 # 26723000

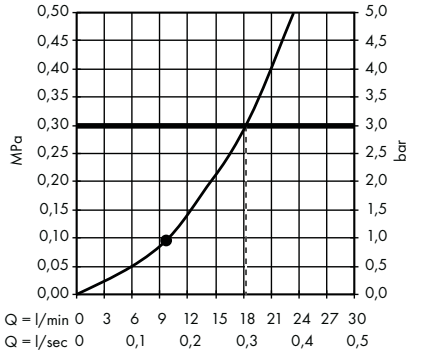

· **Crometta S** Overhead shower 240 1jet EcoSmart 9 l/ min
 # 26724000

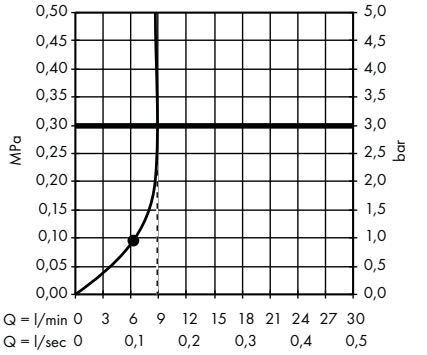

· **Crometta S** Overhead shower 240 1jet LowPressure
 # 26725000

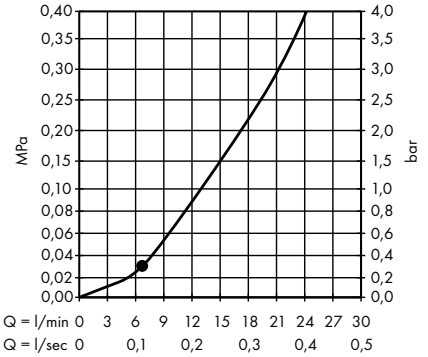

· **Crometta** Overhead shower 160 1jet
 # 26577000, 26577400

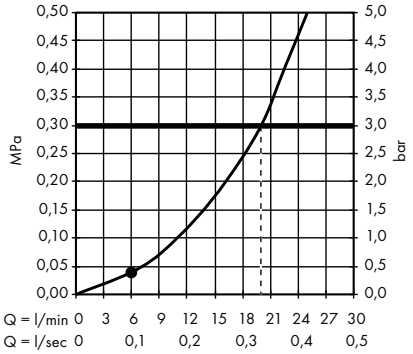

· **Crometta** Overhead shower 160 1jet EcoSmart 9 l/ min
 # 26578000, 26578400

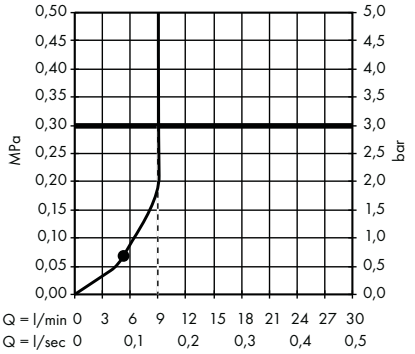

· **Crometta** Overhead shower 160 1jet LowPressure
 # 26576400

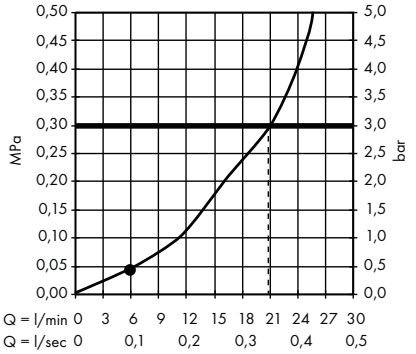

· **Crometta 85** Overhead shower Multi
 # 28425000

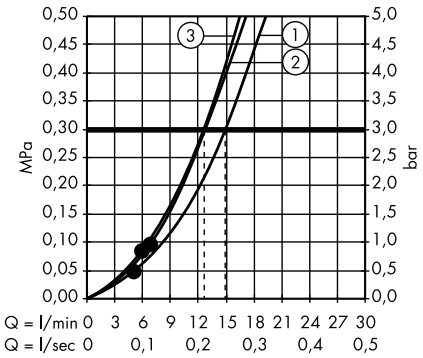

1. Normal
2. Massage
3. Mono

· **Crometta 85** Overhead shower Vario
 # 28424000

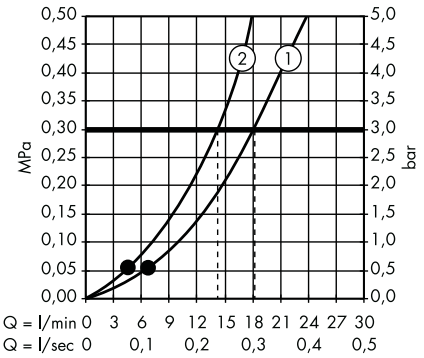

1. Normal
2. Vario

· **Crometta 85** Overhead shower 1jet Green 6 l/ min
 # 28423000

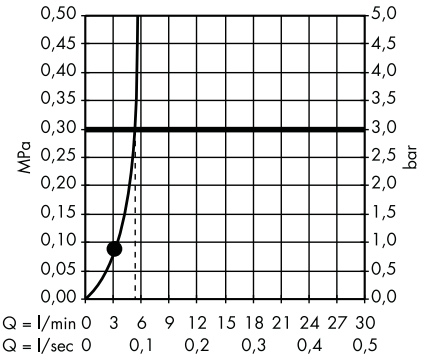

· **Clubmaster** Overhead shower 3jet with shower arm
 # 27475000

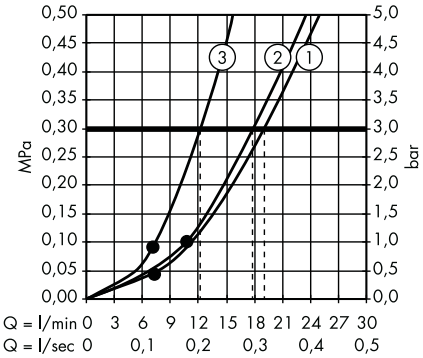

1. Normal
2. Soft
3. Massage

· **Clubmaster** Overhead shower 3jet EcoSmart 9 l/ min with shower arm
 # 26606000

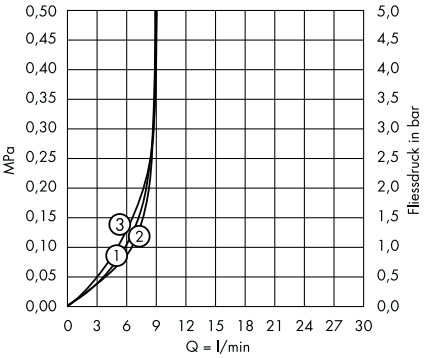

1. Normal
2. Soft
3. Massage

· **Clubmaster** Overhead shower 3jet
 # 28496000

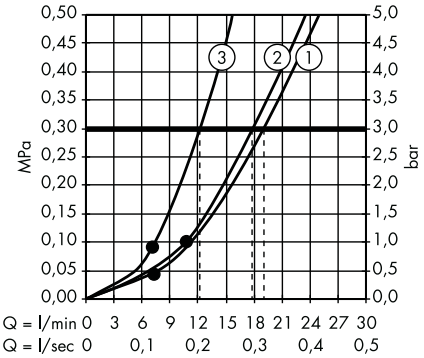

1. Normal
2. Soft
3. Massage

The consumption was measured in combination with the appropriate fittings (thermostat/mixer/in-wall valve) to reflect actual application in practice.

Body showers

· **Rainfinity** Shoulder shower 500 1jet with shower shelf
 # 26243000, 26243700

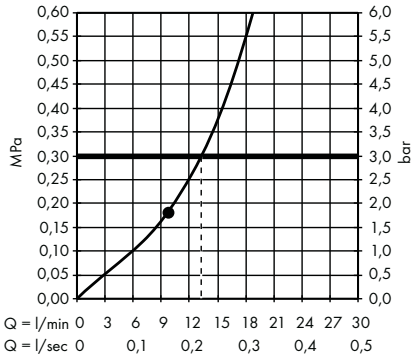

· **PuraVida** Body shower 100 1jet
 # 28430000, 28430400

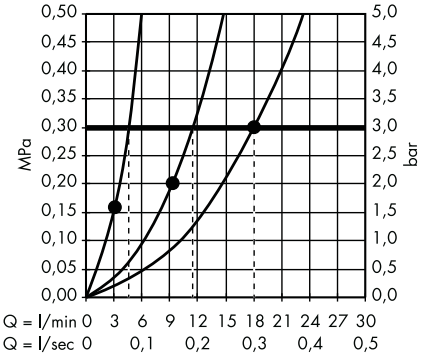

1. 1 x Body shower
2. 3 x Body shower
3. 6 x Body shower

· **Bodyvette** Body shower 1jet
 # 28466000

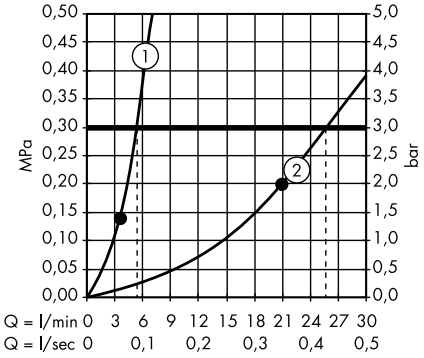

1. 1 x Body shower
2. 6 x Body shower

Showerpipes and shower panels

· **Rainfinity** Showerpipe 360 1jet for concealed installation
 # 26842000, 26842700

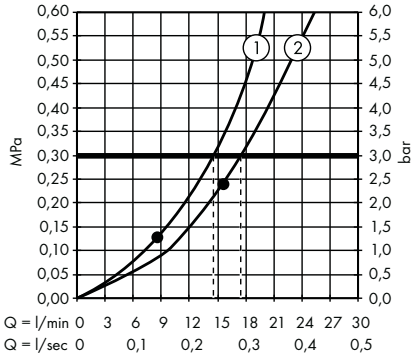

1. Hand shower
2. Overhead shower

· **Rainmaker Select** Showerpipe 460 3jet with thermostat
 # 27106400

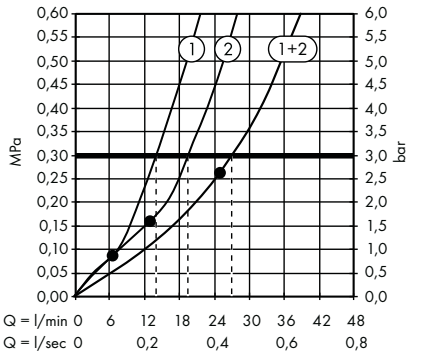

1. Hand shower
2. Overhead shower

· **Rainmaker Select** Showerpipe 460 3jet EcoSmart 9 l/ min with thermostat
 # 27029400

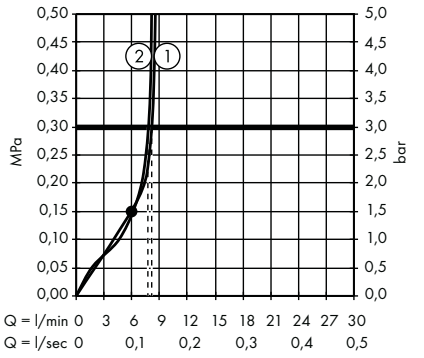

1. Hand shower
2. Overhead shower

· **Rainmaker Select** Showerpipe 460 2jet with thermostat
 # 27109400

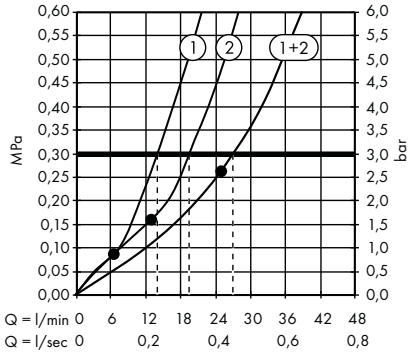

1. Hand shower
2. Overhead shower

· **Rainmaker Select** Showerpipe 460 2jet EcoSmart 9 l/ min with thermostat
 # 27028400

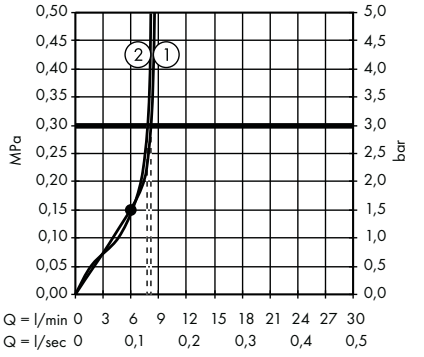

1. Hand shower
2. Overhead shower

· **Raindance Select E** Showerpipe 300 3jet with ShowerTablet Select 300
 # 27127000, 27127400

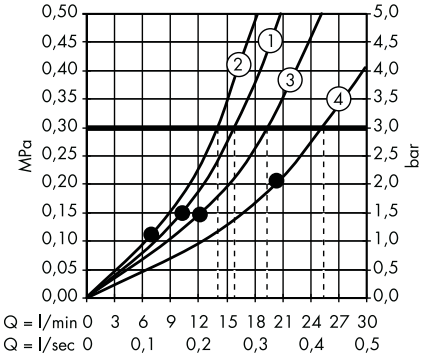

1. Overhead shower Rain / RainAir
2. Hand shower
3. Overhead shower RainStream
4. Overhead shower Rain + RainStream / RainAir + RainStream

· **Raindance Select E** Showerpipe 300 2jet with ShowerTablet Select 300
 # 27126000, 27126400

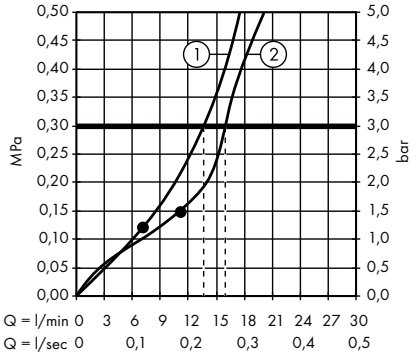

1. Hand shower
2. Overhead shower

· **Raindance Select E** Showerpipe 300 2jet EcoSmart 9 l/ min with ShowerTablet Select 300
 # 27283000, 27283400

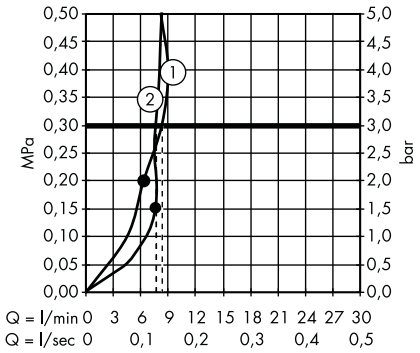

1. Hand shower
2. Overhead shower

· **Raindance Select S** Showerpipe 300 2jet with thermostat
 # 27133000, 27133400

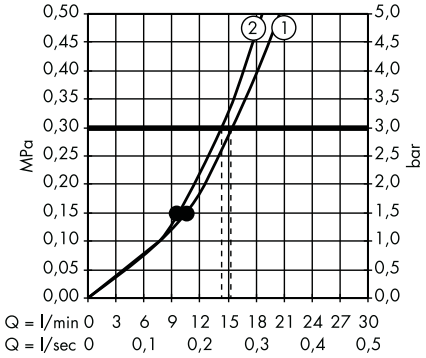

1. Overhead shower
2. Hand shower

· **Raindance Select S** Showerpipe 240 2jet with thermostat
 # 27129000, 27129400

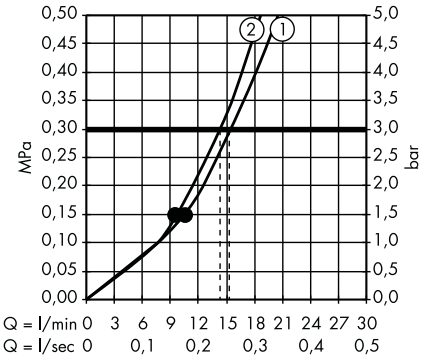

1. Overhead shower
2. Hand shower

· **Raindance Select S** Showerpipe 240 1jet PowderRain with thermostat
 # 27633000, 27633140, 27633340, 27633670, 27633700, 27633990

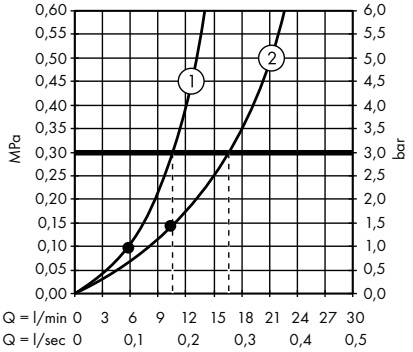

1. Hand shower
2. Overhead shower

· **Raindance E** Showerpipe 360 1jet with thermostat
 # 27112000, 27112400

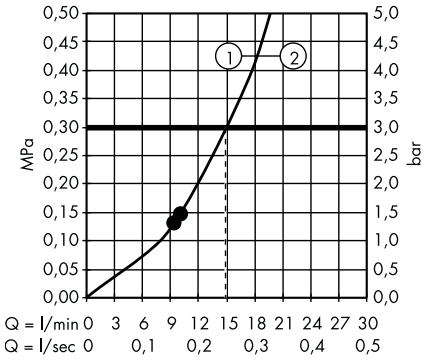

1. Overhead shower
2. Hand shower

· **Raindance E** Showerpipe 360 1jet EcoSmart 9 l/ min with thermostat
 # 27286000, 27286400

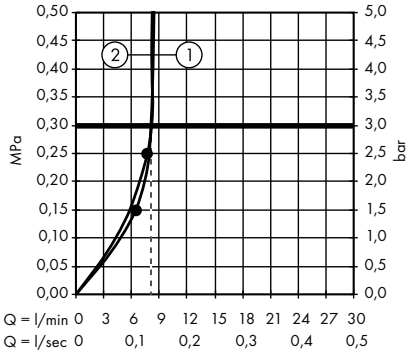

1. Hand shower
2. Overhead shower

· **Raindance E** Showerpipe 360 1jet with bath thermostat
 # 27113000, 27113400

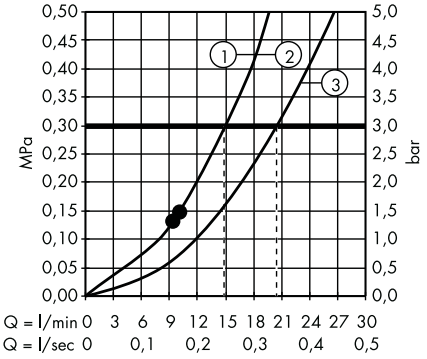

1. Hand shower
2. Overhead shower
3. Bath spout

· **Raindance E** Showerpipe 360 1jet with ShowerTablet Select 300
 # 27288000, 27288400

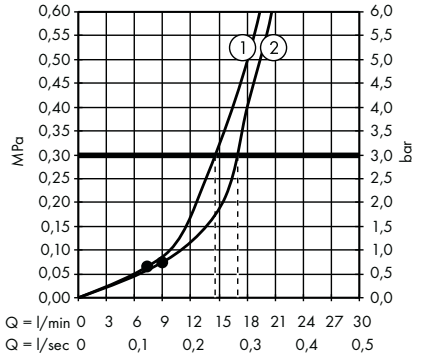

1. Hand shower
2. Overhead shower

The consumption was measured in combination with the appropriate fittings (thermostat/mixer/in-wall valve) to reflect actual application in practice.

· **Raindance E** Showerpipe 300 1jet with ShowerTablet 600
 # 27363000

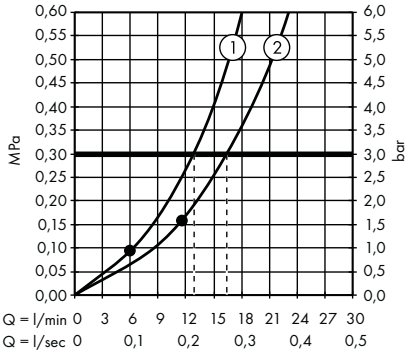

1. Hand shower
2. Overhead shower

· **Raindance E** Showerpipe 300 1jet EcoSmart 9 l/ min with ShowerTablet 600
 # 27364000

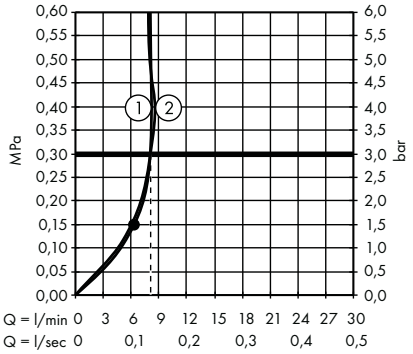

1. Hand shower
2. Overhead shower

· **Raindance E** Showerpipe 300 1jet with ShowerTablet 350
 # 27361000

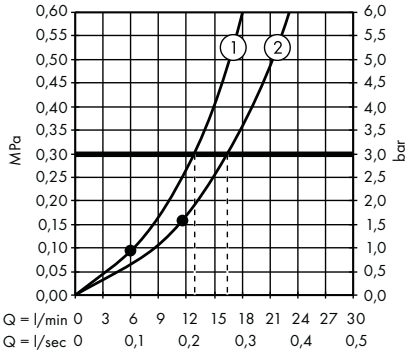

1. Hand shower
2. Overhead shower

· **Raindance E** Showerpipe 300 1jet EcoSmart 9 l/ min with ShowerTablet 350
 # 27362000

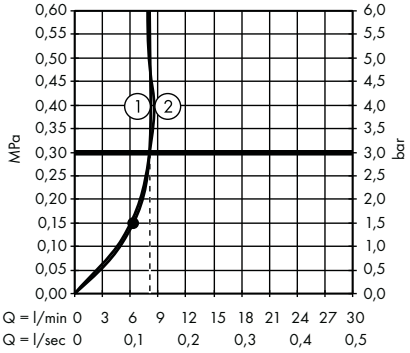

1. Hand shower
2. Overhead shower

· **Raindance S** Showerpipe 300 1jet with thermostat
 # 27114000

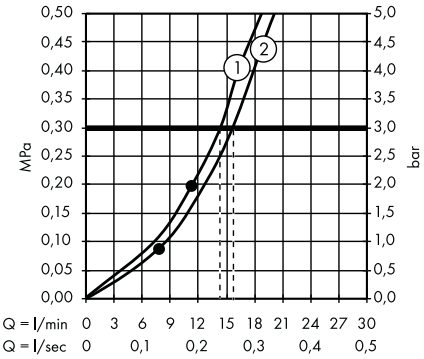

1. Overhead shower
2. Hand shower

· **Raindance S** Showerpipe 240 1jet with thermostat
 # 27115000

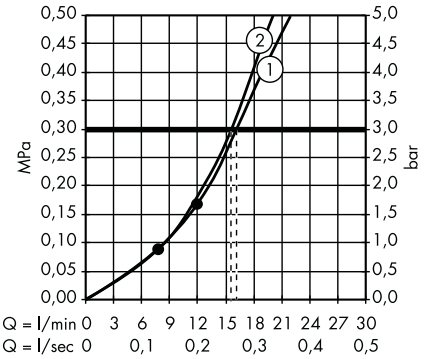

1. Overhead shower
2. Hand shower

· **Raindance S** Showerpipe 240 1jet EcoSmart 9 l/ min with thermostat
 # 27116000

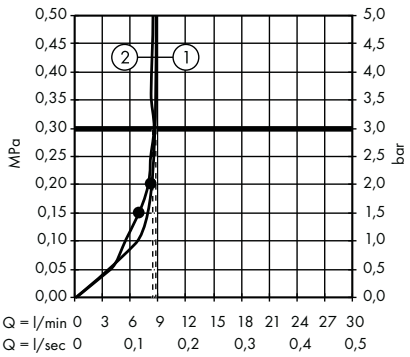

1. Overhead shower
2. Hand shower

· **Raindance S** Showerpipe 240 1jet with bath thermostat
 # 27117000

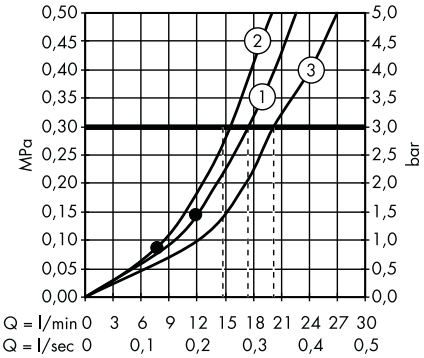

1. Overhead shower
2. Hand shower
3. Bath spout

· **Croma Select E** Showerpipe 180 2jet with thermostat
 # 27256400

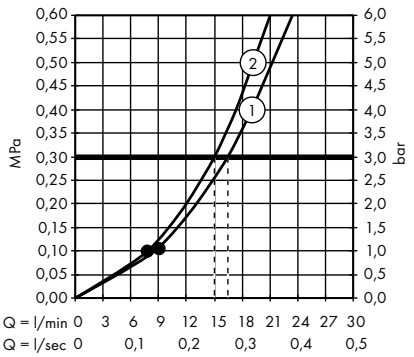

1. Overhead shower
2. Hand shower

· **Croma Select E** Showerpipe 180 2jet EcoSmart 9 l/ min with thermostat
 # 27257400

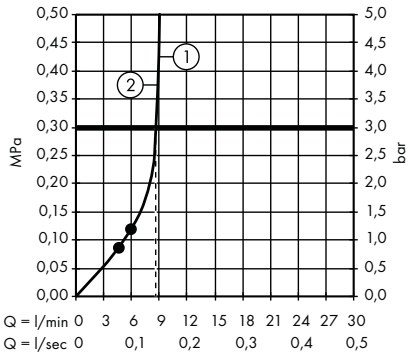

1. Overhead shower
2. Hand shower

· **Croma Select E** Showerpipe 180 2jet with bath thermostat
 # 27352400

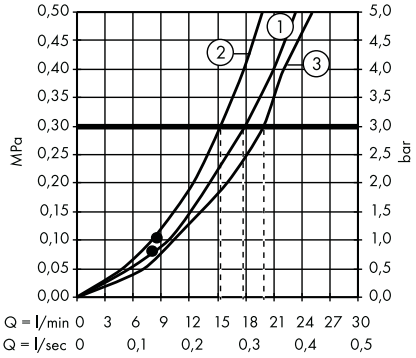

1. Overhead shower
2. Hand shower
3. Bath spout

· **Croma Select E** Showerpipe 180 2jet with single lever mixer
 # 27258400

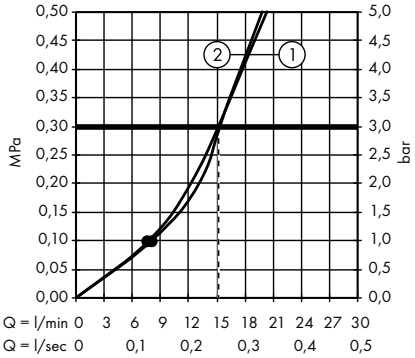

1. Overhead shower
2. Hand shower

· **Croma Select E** SemiPipe Multi with thermostat
 # 27248400

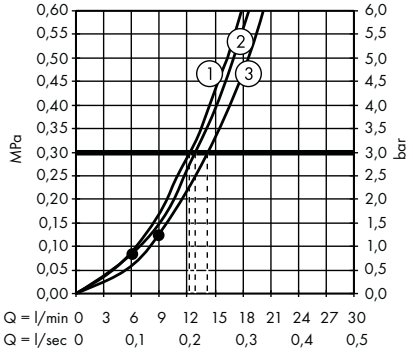

1. Massage
2. IntenseRain
3. SoftRain

· **Croma Select S** Showerpipe 280 1jet with thermostat
 # 26790000

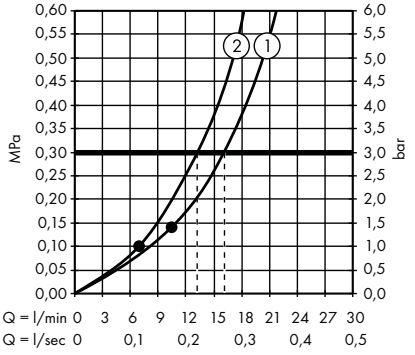

1. Overhead shower
2. Hand shower

· **Croma Select S** Showerpipe 280 1jet with thermostat and hand shower Raindance Select S 120 3jet
 # 26890140, 26890340, 26890670, 26890700, 26890990

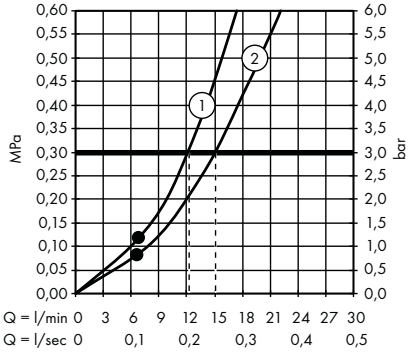

1. Overhead shower
2. Hand shower

· **Croma Select S** Showerpipe 280 1jet EcoSmart 9 l/ min with thermostat and hand shower Raindance Select S 120 3jet
 # 26891140, 26891340, 26891670, 26891700, 26891990

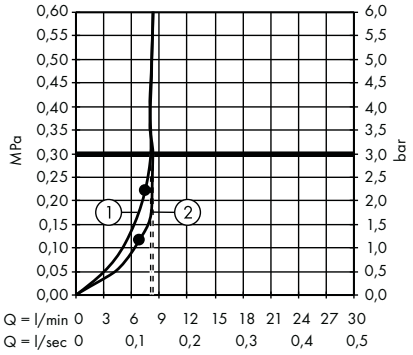

1. Overhead shower
2. Hand shower

· **Croma Select S** Showerpipe 280 1jet EcoSmart 9 l/ min with thermostat
 # 26794000

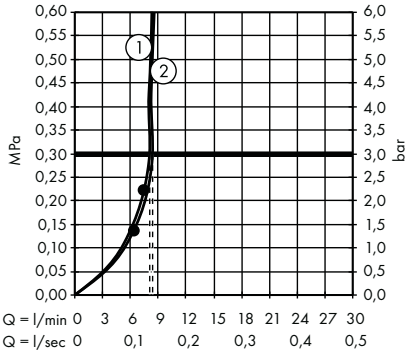

1. Overhead shower
2. Hand shower

· **Croma Select S** Showerpipe 280 1jet with bath thermostat
 # 26792000

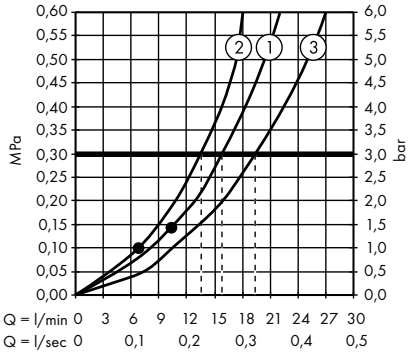

1. Overhead shower
2. Hand shower
3. Bath spout

The consumption was measured in combination with the appropriate fittings (thermostat/mixer/in-wall valve) to reflect actual application in practice.

· **Croma Select S** Showerpipe 280 1jet with single lever mixer
 # 26791000

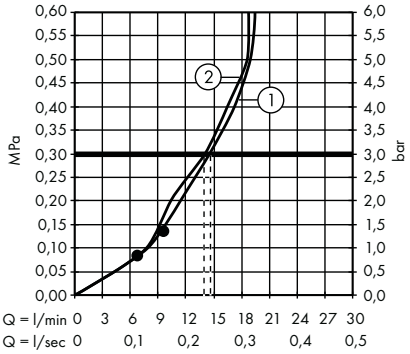

1. Overhead shower
2. Hand shower

· **Croma Select S** Showerpipe 280 1jet Reno
 # 26793000

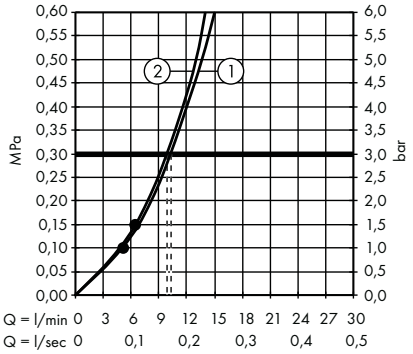

1. Hand shower
2. Overhead shower

· **Croma Select S** Showerpipe 180 2jet with thermostat
 # 27253400

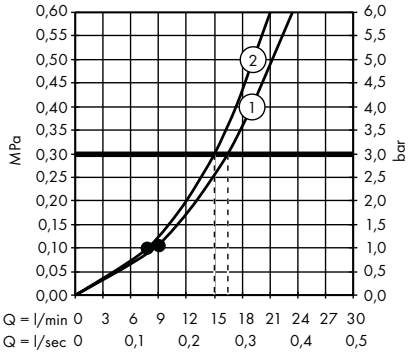

1. Overhead shower
2. Hand shower

· **Croma Select S** Showerpipe 180 2jet EcoSmart 9 l/ min with thermostat
 # 27254400

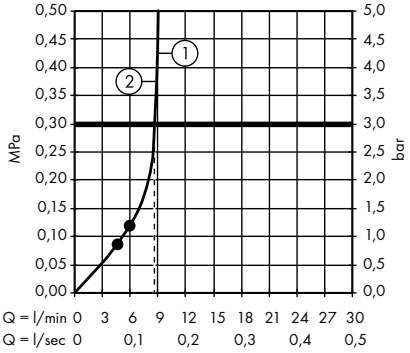

1. Overhead shower
2. Hand shower

· **Croma Select S** Showerpipe 180 2jet with bath thermostat
 # 27351400

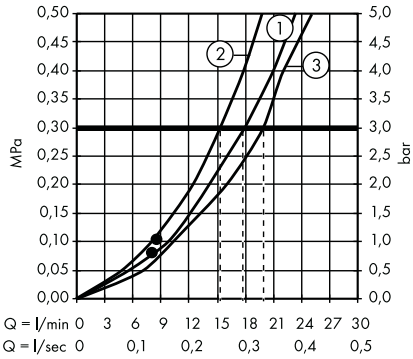

1. Overhead shower
2. Hand shower
3. Bath spout

· **Croma Select S** Showerpipe 180 2jet with single lever mixer
 # 27255400

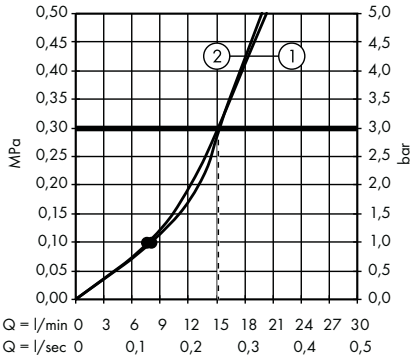

1. Overhead shower
2. Hand shower

· **Croma Select S** SemiPipe Multi with thermostat
 # 27247400

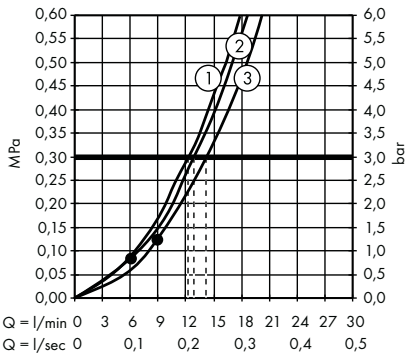

1. Massage
2. IntenseRain
3. SoftRain

· **Croma E** Showerpipe 280 1jet with thermostat
 # 27630000

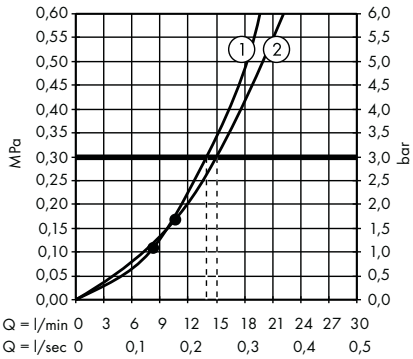

1. Hand shower
2. Overhead shower

· **Croma E** Showerpipe 280 1jet EcoSmart with thermostat
 # 27660000

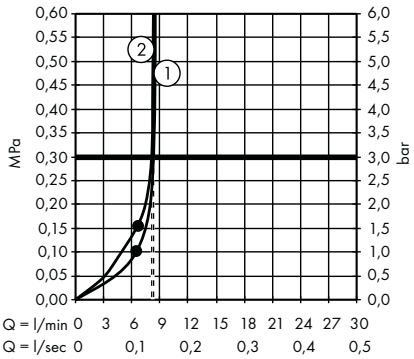

1. Hand shower
2. Overhead shower

· **Croma E** Showerpipe 280 1jet with bath thermostat
 # 27687000

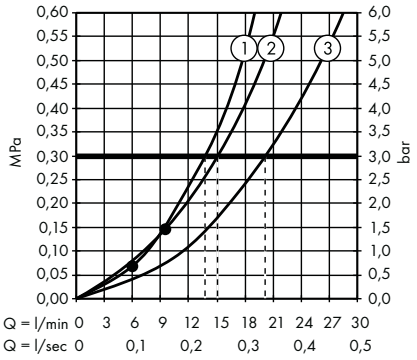

1. Hand shower
2. Overhead shower
3. Bath spout

· **Croma** Showerpipe 220 1jet with thermostat
 # 27185000

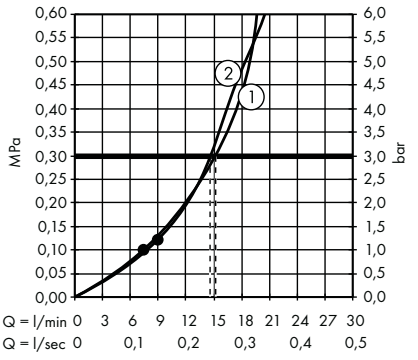

1. Overhead shower
2. Hand shower

· **Croma** Showerpipe 220 1jet EcoSmart 9 l/ min with thermostat
 # 27188000

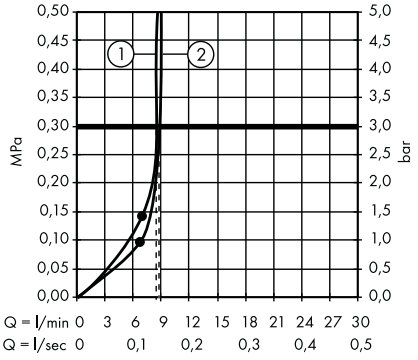

1. Overhead shower
2. Hand shower

· **Croma** Showerpipe 220 1jet with bath thermostat
 # 27223000

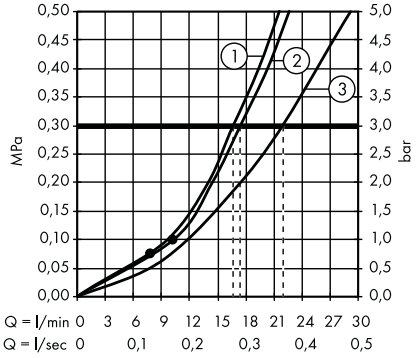

1. Overhead shower
2. Hand shower
3. Bath spout

· **Croma** Showerpipe 220 1jet with single lever mixer
 # 27222000

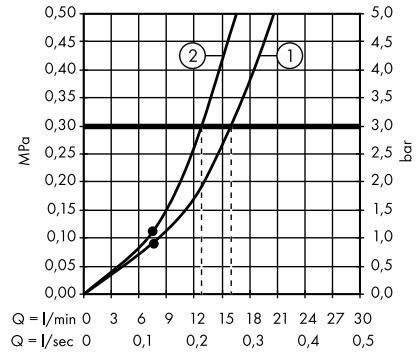

1. Overhead shower
2. Hand shower

· **Croma** Showerpipe 220 1jet Reno
 # 27224000

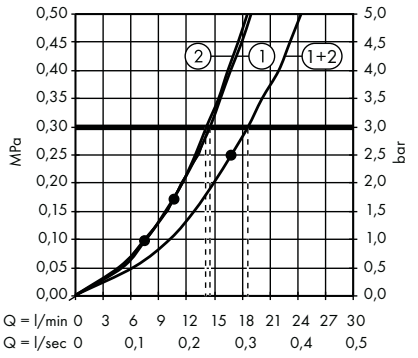

1. Hand shower
2. Overhead shower

· **Croma** Showerpipe 160 1jet with thermostat
 # 27135000

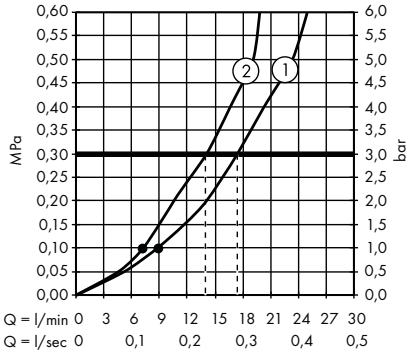

1. Overhead shower
2. Hand shower

· **Croma** Showerpipe 160 1jet with single lever mixer
 # 27154000

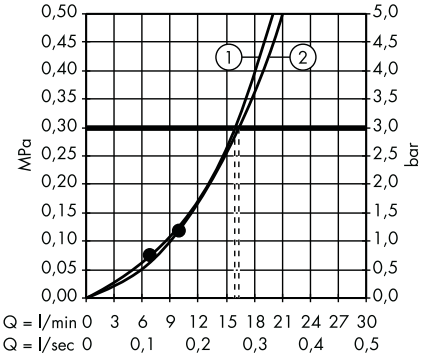

1. Hand shower
2. Overhead shower

· **Crometta E** Showerpipe 240 1jet with thermostat
 # 27271000

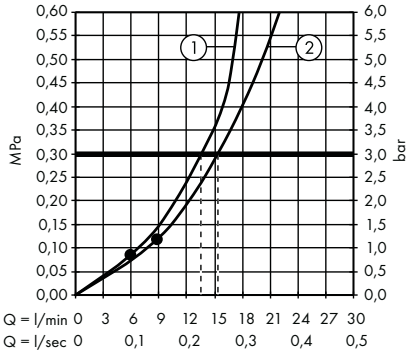

1. Hand shower
2. Overhead shower

The consumption was measured in combination with the appropriate fittings (thermostat/mixer/in-wall valve) to reflect actual application in practice.

· **Crometta E** Showerpipe 240 1jet Green with thermostat
 # 27281000

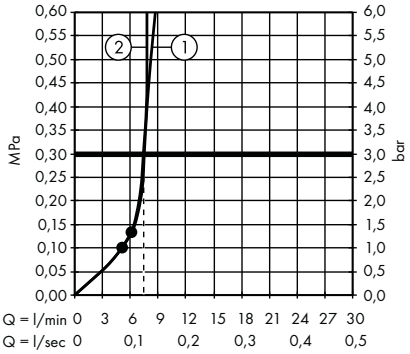

1. Hand shower
2. Overhead shower

· **Crometta E** Showerpipe 240 1jet with bath thermostat
 # 27298000

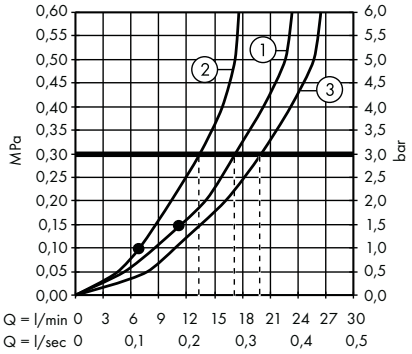

1. Overhead shower
2. Hand shower
3. Bath spout

· **Crometta E** Showerpipe 240 1jet with single lever mixer
 # 27284000

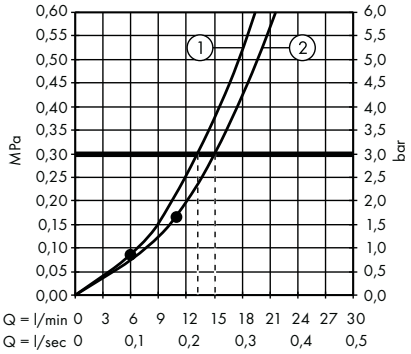

1. Hand shower
2. Overhead shower

· **Crometta E** Showerpipe 240 1jet EcoSmart 9 l/ min Reno
 # 27289000

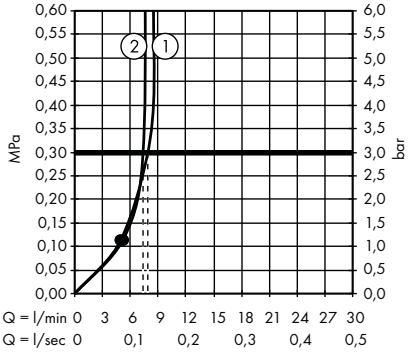

1. Hand shower
2. Overhead shower

· **Crometta S** Showerpipe 240 1jet with thermostat
 # 27267000

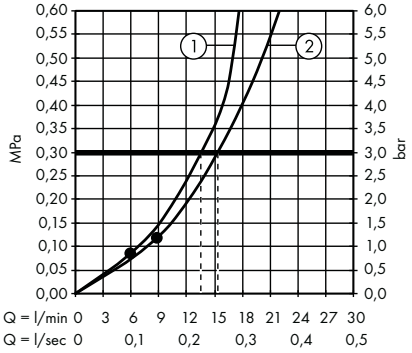

1. Hand shower
2. Overhead shower

· **Crometta S** Showerpipe 240 1jet EcoSmart 9 l/ min with thermostat
 # 27268000

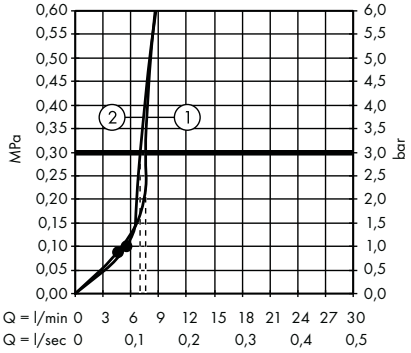

1. Hand shower
2. Overhead shower

· **Crometta S** Showerpipe 240 1jet with bath thermostat
 # 27320000

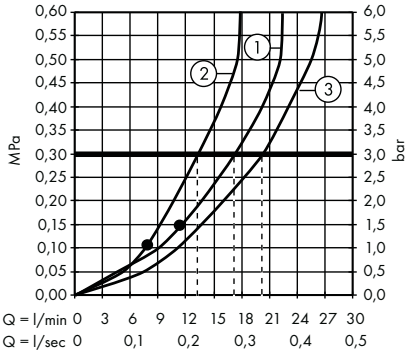

1. Overhead shower
2. Hand shower
3. Bath spout

· **Crometta S** Showerpipe 240 1jet with single lever mixer
 # 27269000

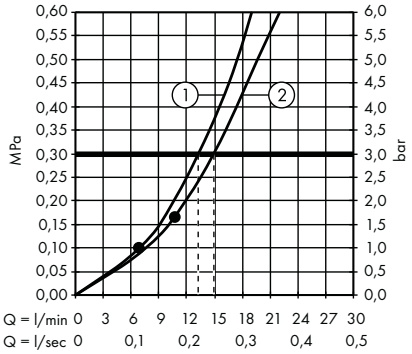

1. Hand shower
2. Overhead shower

· **Crometta S** Showerpipe 240 1jet EcoSmart 9 l/ min Reno
 # 27270000

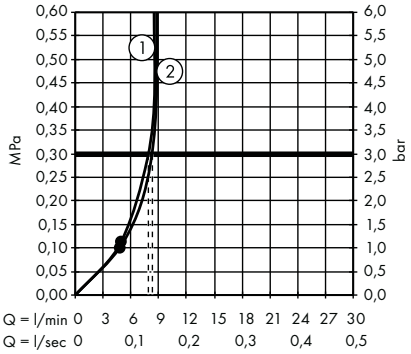

1. Hand shower
2. Overhead shower

· **Crometta** Showerpipe 160 1jet with thermostat
 # 27264400

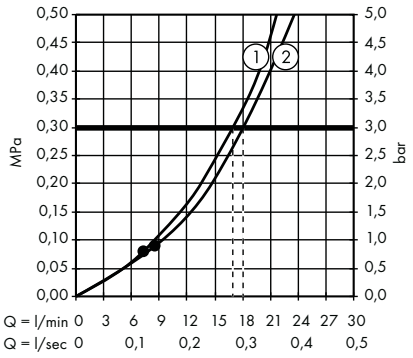

1. Hand shower
2. Overhead shower

· **Crometta** Showerpipe 160 1jet EcoSmart 9 l/ min with thermostat
 # 27265400

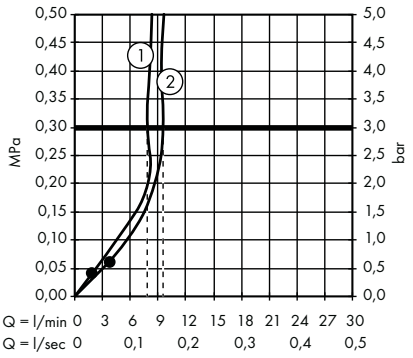

1. Hand shower
2. Overhead shower

· **Crometta** Showerpipe 160 1jet with single lever mixer
 # 27266400

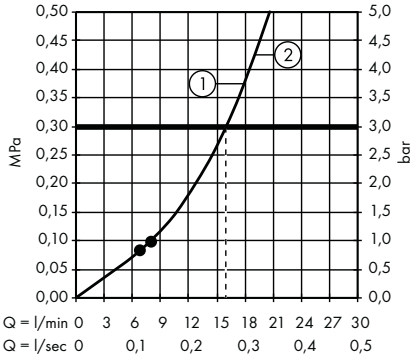

1. Hand shower
2. Overhead shower

· **Raindance** Shower panel Lift 180 2jet for exposed installation
 # 27008000, 27008400

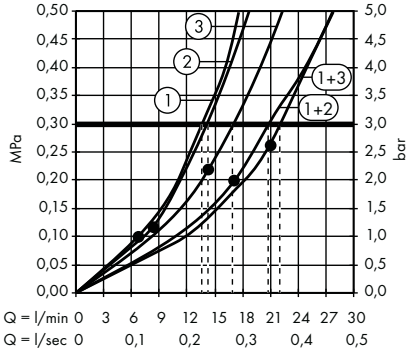

1. Hand shower
2. Rain
3. Rainflow

General Terms and Conditions

I. Scope

1. These general terms and conditions (**AGB**) of Hansgrohe SE (**Hansgrohe**) apply, unless otherwise stated, to all purchase and work and materials contracts as well as other orders (**Order**) between Hansgrohe and customers who are not consumers in accordance with Section 13 of the German Civil Code (BGB) (**Buyer**). Differing general terms and conditions of the buyer are not recognised even if they are not expressly contradicted.
2. The general terms and conditions also apply for future business relations with the same buyer even if they are not expressly agreed again. Unless otherwise stipulated, the general terms and conditions are valid as amended at the time the buyer places the order or also in the version published most recently in text form.

II. Contract closing

1. The offers of Hansgrohe are subject to change unless they are expressly identified as binding in the offer text. The order placed by the buyer is considered a binding contractual offer that remains valid for at least 8 days in the absence of a deviating provision. The contract only comes into effect if Hausgrohe provides the buyer with written (including text form) confirmation in relation to the order.
2. Hansgrohe only assumes a guarantee to end consumers in accordance with a separate guarantee declaration that is designated as such.
3. The documents such as figures and drawings provided by Hansgrohe as part of the contract negotiation stage as well as the technical information and specifications made by Hansgrohe are binding. Technical, constructional or other changes to the order or work are permitted if and to the extent that they are reasonable for the buyer.
4. Individual agreements including trade terms have priority over the general terms and conditions. A written contract or the written confirmation of Hansgrohe is essential for the content of these agreements.

III. Scope and place of delivery, transport and transfer of risk

1. A delivery ex works or a delivery to another shipping location of Hansgrohe disclosed to the buyer is generally agreed and this location is the place of performance of the delivery and any supplementary performance. The risk is transferred to the buyer at the latest upon the product being dispatched. If the delivery is delayed due to the behaviour of the buyer or as a result of a circumstance beyond Hansgrohe's control, the risk is transferred to the buyer upon receiving notification that the products are ready for shipment.
2. Unless otherwise stipulated, the buyer must take out travel insurance at his/her own expense and cost based on standard transport insurance conditions that covers the risk of transporting the product that is part of the order from the shipping location to the agreed destination. The buyer bears the transport costs in accordance with Point V.5.
3. In the event that an agreement is reached on trade terms, the latest version of Incoterms shall apply.
4. Hansgrohe is entitled to partial deliveries and invoices at an acceptable level prior to the expiry of the delivery period.
5. If the delivery or shipment of the delivered item is delayed at the request of the buyer or as a result of circumstances that the buyer bears the risk and responsibility for, the buyer must refund Hansgrohe the costs incurred as a result of storing the item and the accrued interest on the capital deployed for the delivered item. In the case of storage by Hansgrohe, the entitlement amounts to at least 0.5% of the still outstanding invoice amount for each outstanding month, starting with the month after notice has been given that the products are ready for shipment. The customer still retains the right to prove that no damage or substantially less damage has occurred. However, after having set a commensurate subsequent delivery term and after the unsuccessful expiry of this term, Hansgrohe is entitled to use the delivered item for another purpose and to deliver a replacement item to the buyer subject to a reasonably extended deadline or to withdraw from the agreement.
6. Hansgrohe will procure that the products shipped by Hansgrohe to the buyer comply with the laws and regulations of the country / countries designated by the buyer. In case the buyer - after receipt of the products - exports the products to third countries it is the obligation of the buyer to make sure that the products comply with the applicable local laws and regulations of such countries with regard to the products. If, however, the buyer chooses to export products to third countries, the buyer is solely responsible for any and all liability resulting from any non-compliance of the products.

IV. Delivery term and operational disruptions

1. Delivery terms start to apply at the earliest once all documentation which is required for determining the content of the order has been received if the buyer has to obtain this documentation according to the agreement and upon receipt of the down-payment. A delivery term is complied with if the shipment is dispatched within the deadline and the buyer has been notified that the products are ready for shipment.
2. Delivery terms are extended in the event of circumstances occurring which Hansgrohe or its suppliers are not responsible for and which do not have a substantial influence on the production or delivery of the product (e.g. labour disputes, force majeure and other operational breakdowns that are beyond a party's control) for the duration of the operational disruption. Hansgrohe is obligated to inform the buyer of the anticipated duration of the operational disruption and to state a new delivery date. If the product can also not be delivered within the new delivery period, both parties are entitled to withdraw from the agreement in whole or in part; any payment already made by the buyer is immediately refunded. Rights to demand compensation in lieu of performance in accordance with Point X. and the statutory rights of Hansgrohe, especially if a party is no longer obligated to perform its obligations (e.g. due to impossibility), remain unaffected.
3. The conditions for the delay in delivery are based on the statutory provisions irrespective of the existing regulations. Deviating from this however, a written warning is required from the buyer in all cases.

V. Prices and subsidiary expenses

1. Deliveries are made at current prices when the contract is concluded in accordance with the order confirmation from Hansgrohe. All prices apply ex works / dispatch location. All prices are quoted in euros unless otherwise stated and other additional expenses (e.g. installation and instruction costs), statutory value added tax and other statutory fees (e.g. duties, fees) are disclosed at the currently prevailing rate.
2. Hansgrohe reserves the right to increase fixed prices for a period of more than 4 months if cost increases, especially those owing to collective wage agreements, marketable cost prices or material price increases occur after the conclusion of the agreement. These prices are demonstrated to the customer on request.
3. Hansgrohe calculates a minimum quantity surcharge of EUR 10 for an order value of below EUR 50. Purchase quantities that are smaller than the stipulated packaging units are processed at a surcharge of 10% on the net product value.
4. If the delivery is made to a third party, a surcharge of 10% on the net product value is calculated.
5. Orders with a net product value exceeding EUR 750 are dispatched carriage paid, while the freight costs for a net product value below EUR 750 are charged to the customer in the invoice. Express costs and fees for posted goods shipments are always charged to the customer.

VI. Payment and default

1. As stipulated in the invoice, payments must be made without any deduction immediately after receiving said invoice and delivering the product to Hansgrohe. Hansgrohe is however authorised to carry out the delivery in question in whole or in part at any time against prepayment. A proviso to this effect is asserted at the latest at the time the order is confirmed. Hansgrohe expressly reserves the right to accept cheques. Cheques are only accepted on account of payment and only apply as a payment when honoured. All payments shall be made free of charge. The buyer bears the discount, collection and other bank charges for cheques without express agreement. Payments are initially set off against costs, then against interest and then used to settle the oldest principal debt.
2. In the event of a default, default interest at the statutory rate, at least 9% per year, is calculated; it remains possible to provide proof of less damage at the level of the statutory interest rate.
3. The buyer shall only be entitled to offset claims or retention rights in relation to the claims of Hansgrohe if the counterclaim is uncontested or a final decision has been reached. This does not apply if the counterclaim relates directly to the main obligation of Hansgrohe from the same agreement.
4. The assignment of claims is subject to approval from Hansgrohe.

5. If it becomes evident after concluding the agreement or delivering the product that the buyer is not or is no longer creditworthy, e.g. enforcement measures are being initiated against him/her, due invoices are not being paid despite receiving a reminder or any other capital deterioration occurs, Hansgrohe can immediately assert claims which are not yet due or such claims for which a cheque has been provided. In these instances, Hansgrohe can request an advance payment, a collateral security or a delivery that will only be carried out based on cash on delivery for the product that has yet to be delivered. If the buyer fails to comply with the request within the statutory deadline that it has been set, Hansgrohe is entitled to withdraw from the agreement. The statutory rights of Hansgrohe (especially in accordance with Section 321 BGB) remain unaffected.

VII. Title retention

1. Hansgrohe retains ownership of the delivered product until all claims resulting from the business relationship with the buyer at the time the agreement is concluded are settled including all claims from follow-up contracts, repeat orders or spare parts orders occurring at this time. If the value of all security rights to which Hansgrohe is entitled exceeds the value of all secured claims by more than 10%, Hansgrohe shall release a corresponding proportion of the security rights at the request of the buyer.
2. If the buyer acts in a way contrary to the contractual obligations, especially in the event of a default in payment, Hansgrohe is entitled to take back the reserved product. In the event that Hansgrohe takes back or seizes the reserved product, it is not possible to withdraw from the agreement unless Hansgrohe expressly confirms this in writing. Hansgrohe is authorised to sell the product and the sales proceeds must be taken into account for the liabilities of the buyer less utilisation costs accrued. The buyer is obligated to handle the reserved product with care and to store it separately from other products. It is also obligated to insure this product sufficiently at its own expense against damage resulting from fire, water, storm, robbery and theft at the new value. Any security claims that arise in the event of a loss are to be assigned to Hansgrohe. If maintenance and inspection work is required, the buyer must carry out this work on time and at its own expense.
3. The buyer may neither pledge the reserved product nor transfer it by way of security. In the event of seizures or other encroachments by third parties, the buyer must inform Hansgrohe immediately in writing and provide Hansgrohe with all information and documentation which are required for preserving the rights of Hansgrohe. Enforcement officers or third parties are to be informed of Hansgrohe's ownership. If a third party is unable to refund Hansgrohe the judicial and extra-judicial costs of third party proceedings, the buyer is liable to Hansgrohe for the loss incurred subject to the assertion of further claims due to damage, change or destruction to the item itself.
4. The buyer may sell and/or process the reserved product in the course of ordinary business operations provided that Hansgrohe does not assert any rights arising from the retention of title against the buyer. The buyer shall assign to Hansgrohe all claims up to the final invoice amount including value added tax which it has accrued from the resale to its customers or third parties irrespective of whether the item has been resold with or without further processing. Hansgrohe accepts the assignment. In the event of a current account relationship between the buyer and its customer, the claim assigned to Hansgrohe by the buyer in advance also applies to any acknowledged outstanding balance and, in the event of the customer becoming bankrupt, it applies to the „causal" balance which exists at the time. The buyer may even collect the receivables after the assignment. This does not affect the entitlement of Hansgrohe to collect the claim itself. Hansgrohe will not collect the claim itself if the buyer meets its payment obligations resulting from the proceeds collected, is not overdue with its payments and there is no application for opening insolvency proceedings.
5. The buyer is obligated to provide Hansgrohe with a precise list of claims to which it is entitled with the name and address of the customer, the amount of the individual claims, invoice data, etc., to give Hansgrohe all the information required for asserting the assigned claim, to allow this information to be assessed and to disclose the assignment to the customers.
6. The buyer now declares its consent that the persons commissioned with the task of collecting the reserved product may enter the property or the building where the reserved product is located on foot or in a vehicle in order to pick up said reserved product.
7. The buyer always processes or transforms the delivery item for Hansgrohe. If the item is processed with other objects that do not belong to Hansgrohe, Hansgrohe shall become co-owner of the new item in the ratio of the value of the delivered item to the other processed objects at the time of processing. The same rules shall apply to the item produced through processing as for the delivered item subject to retention of title. If the item is processed, mixed or combined in a way that the buyer's item is to be considered as the main item, it is considered as agreed that the buyer assigns proportional co-ownership to Hansgrohe. The buyer shall assign the sole ownership or co-ownership resulting therefrom to Hansgrohe.

VIII. Claims for defects – period of limitation

1. The statutory regulations shall apply for the rights of the buyer in the event of material defects and defects of title unless otherwise determined below. The special statutory regulations for final deliveries of products to a consumer shall remain unaffected (supplier recourse in accordance with Sections 478, 479 BGB); however the regulations in Point X shall apply for compensating damages in the event of supplier recourse.
2. The buyer may only make claims for defects if it duly meets the statutory inspection and complaint obligations.
3. If a delivery item is defective, the buyer has the following rights:
   a) Hansgrohe is obligated to rectify the fault and will do this at its own discretion by eliminating the defect through repair work or by delivering an item that is free from defects.
   b) If the rectification of defects is unsuccessful, the buyer is entitled to withdraw from the agreement or reduce the purchase price. A rescission shall be ruled out if the breach of duty on the part of Hansgrohe is only minor in nature. The buyer shall also be entitled to claim compensation or reimbursement of expenses incurred in vain in the event of defects solely in accordance with the provisions of Point X.
   c) Rectifying the fault involves neither enhancing the defective product nor incorporating a new or repaired product unless Hansgrohe was initially already obligated to incorporate a new or repaired product.
   d) Hansgrohe shall bear the expenses incurred for examining and rectifying the defect, especially labour and material costs (not: expansion and integration costs as well as costs for transporting the product to the place where the fault is to be rectified) if a defect has actually occurred. Hansgrohe may otherwise request compensation from the buyer for the costs (especially examination and transportation costs) resulting from the unjustified request to rectify a fault unless the lack of a defect was not evident to the buyer.
   e) The buyer must inform Hansgrohe of the time and facilities it requires for carrying out the repair work and replacement deliveries required by Hansgrohe. Hansgrohe is otherwise exempt from any liability for the resulting consequences. If the buyer requires the express deployment of a technician or for work to be carried out outside normal working hours for operational reasons which involve additional costs for Hansgrohe, it must bear the extra costs incurred as a result of this (e.g. overtime surcharges, travelling longer distances).
   f) A warranty is provided for replacements and improvements to the same extent as for the original delivery item, however with a time limit until the end of the warranty period of the original delivery item.
4. The buyer is solely responsible for damage resulting from natural wear and tear, inappropriate or improper use, incorrect assembly or commissioning by the buyer or third party, incorrect or negligent handling, excessive use, unsuitable operating equipment or chemical, electrochemical or electrical influences provided that Hansgrohe is not culpable for this.
5. Deviating from Section 438 para. 1 no. 3 BGB, the general period of limitation for claims resulting from material and legal defects (warranty period) is one year following delivery. After the warranty period has expired, claims for defects shall no longer apply. Separate statutory regulations governing limitation (especially Sections 438 para. 1 no. 1 and 2, para. 3, 444, 479 BGB) shall remain unaffected. Compensation claims in accordance with Point X. become statute-barred solely in accordance with statutory provisions.

IX. Returns

1. Products delivered by Hansgrohe are not taken back as a rule unless the buyer is entitled to compensation (e.g. due to rescission in the event of a failed subsequent delivery).
2. If Hansgrohe is prepared to make an exception and take the product back, an appropriate fee (usually 25% of the net product value) is charged for this as part of an appropriate agreement. The transport risk and transportation costs are borne by the buyer.

General Terms and Conditions

X. Liability for compensation

1. Hansgrohe is liable for compensation in accordance with the statutory provisions unless otherwise stated below. In the event of breaches of duty – regardless of the legal reason – Hansgrohe shall be responsible for intent and gross negligence. Hansgrohe is only liable in the event of simple negligence:
   a) for damages resulting from loss of life, physical injury or damage to health and
   b) for damages resulting from the substantial infringement of important contractual obligations (obligations which must be fulfilled before the contract is executed properly and which the contractual partner may, as a matter of routine, trust that they shall be met); the liability in this case is however restricted to compensation for the typically foreseeable damage.
2. The above limitations of liability also apply in favour of the employers, employees, representatives and assistants of Hansgrohe. Only the statutory regulations apply for claims in accordance with the German Product Liability Act.
3. Exclusions or limitations of liability do not apply in so far as Hansgrohe has failed to disclose a fault with fraudulent intent or has provided a guarantee for the condition of an item.

XI. Rescission of the purchase agreement

1. If the purchase agreement is rescinded (e.g. due to one of the contractual parties withdrawing), the buyer is obligated to return the delivery item to Hansgrohe in advance regardless of any other development in accordance with the following clauses. Hansgrohe is entitled to collect the delivery item from the buyer's premises.
2. Hansgrohe may also request a reasonable payment from the buyer for the deterioration or destruction of the delivered item or for the delivered item, which is the risk and responsibility of the buyer, not being returned.
   Hansgrohe may also request payment for the use of the delivered item if the value of the delivered item has reduced between the completion of its installation and its direct repossession in full by Hansgrohe. This decrease in value is calculated from the difference between the total price specified in the order and the present value as calculated from the sales proceeds or if a sale is not possible from the estimate of a sworn authorised expert.

XII. Assignment

The assignment of rights and / or the transfer of the buyer's obligations stated in the agreement are not permitted without the written approval of Hansgrohe. Section 354a of the Commercial Code (HGB) shall remain unaffected.

XIII. Export control regulations

1. The delivery items may be subject to the export control regulations of the Federal Republic of Germany, the European Union, the United States of America or other states.
2. If the delivered item is exported abroad at a later date, the buyer is responsible for complying with the statutory provisions.

XIV.Competent court and applicable law

1. The law of the Federal Republic of Germany shall apply to these general terms and conditions and the contractual relationship between the parties excluding international common law, especially UN Purchasing Law. The choice of law also applies to non-contractual obligations that are closely linked to this agreement. The scope and scale also determine the choice of law in accordance with statutory provisions.
2. Stuttgart (Germany) is agreed as the exclusive competent court for agreements with buyers who have their head office in a member state in the European Union. All disputes that cannot be mutually agreed upon arising from or relating to agreements with buyers who have their head office outside the European Union shall be settled finally in accordance with the arbitration regulations of the Deutsches Institution für Schiedsgerichtsbarkeit e.V. Bonn (DIS) with the exclusion of the normal legal process. The place of arbitration is Stuttgart, Germany. The procedural law of this place shall apply if the arbitration regulations do not contain any corresponding provisions. The arbitration proceedings are conducted in German. The court of arbitration may also decide on the validity of this arbitration agreement.

General Terms and Conditions of Hansgrohe SE
Version: 01 April 2019

hansgrohe

hansgrohe
pro.hansgrohe-int.com

hansgrohe ComfortZone test
pro.hansgrohe-int.com/comfortzone-test

Spare parts shop
spares.hansgrohe.com

Planning-Data
pro.hansgrohe-int.com/planning-data

Find out more about the hansgrohe world at http://pro.hansgrohe-int.com

Find hansgrohe online and on social media.

hansgrohe Price Book 2020/2021 assortment bath and kitchen EX en-EN · Subject to change in the interest of technical advancement
Form No. 84121074· 09/20/4.4 · Printed in Germany

4 059625 326817

MIX
Paper from responsible sources
FSC® C010156

Hansgrohe SE · P.O. Box 1145 · 77757 Schiltach/Germany
Tel. +49 7836 51-0 · Fax +49 7836 51-1300 · info@hansgrohe.com · www.hansgrohe.com