hansgrohe



Price Book 2019/2020

hansgrohe assortment bath and kitchen

Hansgrohe contact

Hansgrohe Headquarters

The Hansgrohe Master Service - Headquarters

Service hours:
Monday-Thursday: 8:00 am - 4:00 pm
Friday: 8:00 am - 3:00 pm

Phone: +49 7836 51-1282
Fax: +49 7836 51-1440
info@hansgrohe.com

You will also find technical information at
pro.hansgrohe-int.com

Global Projects Services - Headquarters

gpservices@hansgrohe.com

You will also find tender texts and planning details at
pro.hansgrohe-int.com/planning-data

Hansgrohe Aquademie - Headquarters

Monday-Friday: 7:30 am - 7:00 pm
Saturday-Sunday: 10:00 am - 4:00 pm

Hansgrohe SE
Hansgrohe Aquademie
Auestr. 9
77761 Schiltach/Germany
Phone: +49 7836 51-3272
Fax: +49 7836 51-1505

The Aquademie is our adventure centre on all aspects of water.
pro.hansgrohe-int.com/aquademie

The prices quoted are recommended retail prices and do not include VAT. Errors and omissions excepted.
This Price Book renders all preceding ones void.

Measurements within scale drawings are in mm.

You will find further information and sales arguments on the individual products in the sales manual or at pro.hansgrohe-int.com

Price Book 2019/2020

hansgrohe

Hansgrohe SE · P.O. Box 1145 · 77757 Schiltach/Germany
Tel. +49 7836 51-0 · Fax +49 7836 51-1300
info@hansgrohe.com · www.hansgrohe.com

Index

hansgrohe because	8
Service	10
PowderRain	14
Technologies & Spray modes	15
Sponsoring	16
Phase out products	18
New products	20
Packaging units	26
Index price brackets	32
Code numbers	33

Overview of showers

Hand showers 53
Rainfinity | Raindance Select | Croma Select | PuraVida | Raindance Classic | Croma

Shower sets / Shower bars / Shower holder 65

Shower hoses and Accessories 121

Overhead showers 125
Rainfinity | Rainmaker Select | Raindance Select | Croma Select | PuraVida | Raindance Rainmaker | Raindance Rainfall | Raindance | Raindance Classic | Croma E | Croma | Crometta | Clubmaster

Showerpipes and shower panels 161

Thermostatic mixers / valves 201
Ecostat exposed | ShowerTablet Select | ShowerTablet | RainSelect | ShowerSelect Ecostat concealed | Valves

iBox® universal 243

Overview of mixers

PuraVida® 255

Metropol® 269
Metropol | Metropol Classic

Metris® 303
Metris | Metris S

Talis® 323
Talis Select E | Talis E | Talis Select S | Talis S

Focus® 353

Novus® 367

Logis® 379

Electronic- and project mixers / Care assortment 395
PuraVida | Metropol | Metris | Talis | Focus | Novus | Logis

Accessories 417
Rainfinity | Logis | Unica Comfort | Logis Universal | RainScent

Wastes and overflow 427

Kitchen mixers 441

Spare Parts and Accessories 535
Showers | bath mixers and kitchen mixers

Flowcharts 555

Your exacting standards are our benchmark – why hansgrohe?

Innovation

- **Revolutionary innovations**
- **Pioneers in the sanitation industry**
- **Ground-breaking technologies**

At hansgrohe, our innovations have revolutionised the sanitation industry; some of our ideas made sanitation history, and some have even made cultural history. We have our own research and development labaroatory in the centre of the Black Forest, Germany. At this powerhouse, we are constantly working on new ideas and, with more than 16,000 active patents, our TOP 100 company remains as one of the world's leading suppliers in the sanitation industry. At hansgrohe, we always focus on product benefits that customers can enjoy using and designs that customers can take pleasure in.

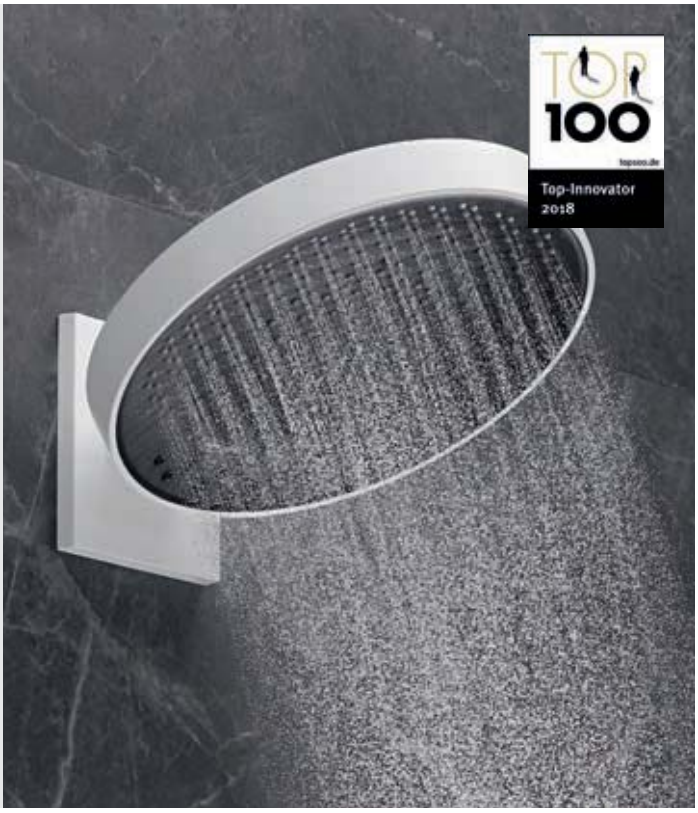



Design

- **More than 600 awards**
- **A design for every style**
- **International reference projects**

Design can be defined in a number of ways: shape, aesthetic, style. But, at hansgrohe, design means more than just looking good. Alongside renowned designers, we focus on high quality and maximum customer benefit. We believe that its this unwavering attention to detail that has earned more than 600 international product awards. Whether it's modern, traditional or avant-garde, hansgrohe has the perfect furnishings to suit any need and, most importantly, we guarantee that excellent design will outlive fast-paced fashion trends.

Quality

- **Experts since 1901**
- **Made in Germany**
- **5 year guarantee**

Since 1901, people all over the world have put their trust in hansgrohe's durable and high-quality products from the heart of the Black Forest. Our "Made in Germany" commitment is an integral part of our philosophy and around 80% of our products remain manufactured domestically. Only the best quality, drinking water-grade materials are used, as well as put through their paces in endurance tests to ensure they meet all our requirements. We offer a 5-year guarantee and 15 years guaranteed availability because we are 100% conmmited to, and confident in, the high quality of our products. hansgrohe: quality that you can rely on.





Service

- **Contactable and reliable**
- **Informative and involved**
- **Plan and enjoy**

Customer satisfaction has always been our primary concern. At hansgrohe, we see ourselves as a partner in retail and craftsmanship. So, being able to deliver the top-quality, personal service to our customers at all times is a key part of our corporate philosophy. No matter the question, problem or special request, we are here to help.

Service – contactable and reliable

Customer satisfaction is always a priority at hansgrohe. As a result, we always offer our customers the best quality and service tailored to the individual. You can rely on the qualified technical and sales advice from our employees wherever you are, at all times. With hansgrohe you get service by professionals, for professionals.

Field Service

Our sales team will be by your side as a professional and direct contact partner. A member of the team will always be on hand to answer all questions regarding our products.

In house Sales Service

You can phone, email or fax hansgrohe customer advisers for individual technical and commercial support.

Service hours
Monday – Friday: 9.00 am – 5.00 pm
Phone: +49 7836 51-0
Fax: +49 7836 51-1300
E-mail: info@hansgrohe.com

Technical Service

Our service specialists are trained experts in sanitation and/or sanitary engineers, so they are in an excellent position to deal with your technical issues. And if something cannot be explained on the telephone or via e-mail, you can request an on-site visit from a specialist in building services.

Service hours
Monday – Friday: 9.00 am – 5.00 pm
Phone: +49 7836 51-1282
Fax: +49 7836 51-1440
E-mail: info@hansgrohe.com

Online spare parts shop

All parts in detail: The electronic spare parts catalogue lets you find and purchase spare and special parts with particular ease. In addition, you will benefit from other functions like dimension drawings, links between drawings and service parts, a checklist and downloads of installation and service instructions.
spares.hansgrohe.com



Special services and logistics

At hansgrohe, we will do all we can to satisfy your individual needs. Express delivery (no matter the distance), 24-hour spare parts service, excellent product availability, routine-optimised delivery, standardised cardboard packaging to make the ordering process and delivery as simple as possible plus a 5-year guarantee and 15 years guaranteed availability all come as standard with hansgrohe.

A recipe for success

Service – informative and involved

You need to be one step ahead of the competition if you want to remain at the cutting edge of product and technological development. This includes everything from the core businees to effective marketing, personnel management and further training. hansgrohe provides a comprehensive range of services so that specialist partners always have the most up-to-date information and are best equipped for commercial success.

Courses, training and events

Know-how for you: we offer a wide range of courses, training and events in the most diverse areas such as new technologies, modern marketing instruments or operational or personnel management. At our own training centre, the Aquademie in Schiltach or on-site anywhere in the country.
pro.hansgrohe-int.com/aquademie

Comprehensive information

Always up-to-date: hansgrohe partners receive regular information on new products, marketing campaigns, sales campaigns, courses, events and company news. We address all the target groups, be they retail, trade or projects, individually.



Rewards programme

The hansgrohe Talisman reward programme offers our trade partners an extensive choice of high-quality services and rewards. Scan the enclosed Talisman QR codes using the hansgrohe Talisman app. You can also use the app to manage your account and order your choice of reward(s). Simply download the app from the Google Play Sore or Apple App Store.

Website for professionals

We provide additional digital services on our website for specialist partners. For example: information on delivery periods, the online spare parts catalogue, Talisman account, price lists and marketing materials are just some of the benefits we offer here. So, you can get the information you need, even if you are on-the-go or visiting a customer.
www.pro.hansgrohe-int.com

Good support

Service – planning and calculations

Whether you need help choosing the right combination of products, optimising the way planning data is arranged or optimising savings, hansgrohe will provide you with support on everything you and your customers need to successfully, as well as cost-effectively, plan and calculate your bathroom projects, including innovative digital solutions.

Planning data

We make a vast amount of information, e. g. dimensional drawings and 3D data, available online. For efficient building information modelling (BIM) across all trades, hansgrohe supplies all relevant BIM data for key software applications. This includes geometry and positioning, materials and properties of the taps, showers, shower systems and installation technology.
pro.hansgrohe-int.com/service

ComfortZone test

Has your customer fallen in love with a tap, but is unsure whether it really goes with his/her wash basin? Do you want to know which of our taps match which wash basin? We will support you and your customers with confidently stylish hansgrohe product pairings that have been technically reviewed in our Test Centre. You can find more information on ComfortZone and the ComfortZone test at
hansgrohe.com/comfortzone

Savings Calculator

With the hansgrohe savings calculator, you can work out how much you and your customers will save by having EcoSmart technology in the taps and showers. You can also use it to figure out how soon your investment will pay off. Sanitary experts can visit **pro.hansgrohe-int.com/savings-calculator** on a desktop or **m.pro.hansgrohe.-int.com/savings-calculator** on mobile. Consumers can go to **hansgrohe-int.com/savings-calculator** on a desktop, or on a mobile: **m.hansgrohe-int.com/savings-calculator**



Project Support

Are you just about to plan one or more bathrooms and need help in planning the job or putting the work out to tender? Our project consultancy team would be happy to assist you.

Service hours
Monday – Friday: 7.30 am – 5.00 pm
Phone: +49 7836 51-3126
Fax: +49 7836 51-1878
E-mail: gpservices@hansgrohe.com

iSpecify

The hansgrohe online planning platform, iSpecify, makes planning your bathroom simple. It helps with all the necessary product specifications and provides inspiration with impressive examples. Simply start your planning process by viewing the reference projects or the specific product and see for youself. You can access all the key data at all times and save your progress in project lists.
ispecify.hansgrohe.com

First-hand testing

Service – put it to the test

The proof is in the pudding. You can experience the whole world of hansgrohe products up close and with all five senses at our exhibition grounds in Schiltach. Go on a tour of our exclusive bathroom exhibition, visit the Water-Bath-Design Museum or thoroughly test the showers in the hansgrohe Aquademie.

Aquademie

Bathroom exhibition, Water-Bath-Design Museum, bathroom and design, tours and consultations.
pro.hansgrohe-int.com/aquademie

Opening hours
Monday – Friday: 7.30 am – 7.00 pm
Saturdays, Sundays & public holidays:
10.00 am – 4.00 pm

Booking advice:
Tel.: +49 7836 513272
Tuesday, Wednesday, Friday:
1.00 pm – 6.00 pm



Showerworld

Test showers in the Showerworld. Anything is possible at the hansgrohe Aquademie.
pro.hansgrohe-int.com/aquademie

Opening hours
Monday – Friday:
7.30 am – 7.00 pm
Saturday, Sunday:
10.30 am, 12.30 pm, 2.30 pm

Register for the Showerworld:
Telephone: +49 7836 51 3272
Fax: +49 7836 51-1505
1 hour, maximum 20 people



Envelop your whole body in rejuvinating spray – PowderRain

A soak under a PowderRain spray is about more than just getting clean. The micro-fine droplets makes every shower experience an indulgence. PowderRain has been designed to wrap you in a cocoon of micro-fine droplets, for a sensual and silent indulging session for mind and body. PowderRain delivers every drop where it's needed most: on your skin. The reduced splash takes the effort out of cleaning, making it a much better feel-good experience for you. Available in the Rainfinity range and select Raindance products.



Technologien



Simply regulates the water flow at the touch of a button: a playful way to turn the shower or jet on and off or switch between modes.



Reduces the flow rate to save water and energy. For long-lasting pleasure.



Combines water with a generous amount of air. For a soft, splash-free water spray and rich, full shower drops.



Wipe limescale deposits away easily by rubbing your finger over the flexible silicone nubs.



Distributes the water over the large spray face enveloping the whole body in drops of well-being.



Defines the useable area between washstand and mixer. Something to suit every customer.

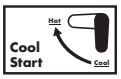

Cold water starts to flow when it is opened in the basic setting. You consume hot water only when you need it.



Cools through the controlled flow of cold water to stop the product getting hot. For even safer showering.

Spray modes



A unique shower experience thanks to the soft caress of micro droplets.



Intense jet of micro-fine droplets for sensational showering.



Full shower rain, ideal for washing hair.



Tremendous showering pleasure over a larger area.



Gentle shower rain with air-enriched drops.



Large jet envelops your whole body in soft droplets.



An intense jet of water that activates and wakes you up



Intensive shower rain that refreshes and rejuvenates.



A soft water spray that caresses the body for that feel-good sensation.



The harmonious combination of gentle shower drops and dynamic spray.



Concentrated targeted massage spray.



Boosts energy after a challenging day.



A strong massage spray that invigorates and soothes aching muscles.



Focussed jet for a soothing, feel-good shower.



Powerful flood jet for generous coverage.



Generous flow of soft sprays.

Surfaces

Order numbers specifying a surface finish are (#) eight digits long,
for example 28500, -000 = Chrome

-000	-090	-140	-340	-400	-450	-600	-670	-700	-800	-990
Chrome	Chrom gold optic	Brushed bronze	Brushed black chrome	White Chrome	White	Black Chrome	Matt black	Matt white	Stainless Steel Finish	Polished gold optic



© Bettiniphoto

From high-performance to ultimate relaxation

hansgrohe products help you to focus on the challenges that come with a top performance by offering a way to rest and recuperate after a strenuous day. We understand that athletes appreciate the incentive and indulgence of showering. Since 2017, hansgrohe has been the official title sponsor of the world-class BORA-hansgrohe cycling team who wow crowds all over the world, just like our products. The team have been involved in testing and developing hansgrohe products to offer our athletic customers a showering indulgence that matches their performance. As hansgrohe brand ambassadors, the BORA-hansgrohe team spend just under 300 days of the year travelling the world. Find out where and when our riders will be racing at **BORA-hansgrohe.com** or on the hansgrohe and BORA-hansgrohe team social media pages.

facebook.com/Borahansgroheofficial
facebook.com/hansgrohe
facebook.com/PeterSagan

instagram.com/borahansgrohe
instagram.com/hansgrohe

BORA-hansgrohe.com
hansgrohe.co.uk



Left-hand page: Santos Tour Down Under 2018, Stage 4 – 128.2 km from Norwood to Uraidla. Stage winner: Peter Sagan.
Right page: Peter Sagan, World Cycling Champion 2015, 2016 & 2017.

Phase out products	Code no.	available up to
Shower sets / Shower bars / Shower holder		
Croma 100 shower sets		
Croma 2jet hand shower/ Unica'S wall bar 0.90 m set	27777000	12/31/2020
Crometta 100 shower sets		
Shower set Multi EcoSmart 9 l/min with shower bar 65 cm	26653400	12/31/2019
Shower set Multi EcoSmart 9 l/min with shower bar 90 cm	26659400	12/31/2019
Shower set 1jet EcoSmart 7 l/min with shower bar 65 cm	26660400	12/31/2019
Shower set Vario EcoSmart 9 l/min with shower bar 90 cm	26662400	12/31/2019
Shower set 1jet EcoSmart 9 l/min with shower bar 90 cm	26663400	12/31/2019
Raindance Select E shower sets with thermostatic mixer for exposed installation		
Shower system for exposed installation 120 with ShowerTablet Select thermostat and shower bar 65 cm	27026000 27026400	12/31/2020
Shower system for exposed installation 120 with ShowerTablet Select thermostat and shower bar 90 cm	27027000 27027400	12/31/2020
Crometta 85 shower sets with thermostatic mixer for exposed installation		
Shower system for exposed installation Vario with Ecostat universal thermostat and shower bar 65 cm	27058000	12/31/2020
Shower system for exposed installation Vario with Ecostat universal thermostat and shower bar 90 cm	27080000	12/31/2020
Overhead showers		
PuraVida		
Overhead shower 400 1jet EcoSmart 9 l/min with shower arm	26602000 26602400	12/31/2020
Overhead shower 400 1jet EcoSmart 9 l/min with ceiling connector	26603000 26603400	12/31/2020
Raindance Rainmaker		
Overhead shower 600 3jet without lighting set	28403000	12/31/2020
Overhead shower 600 3jet with lighting set	28404000	12/31/2020
Raindance S		
Overhead shower 180 1jet with shower arm	27471000	12/31/2020
Overhead shower 180 1jet with ceiling connector	27472000	12/31/2020
Crometta		
Overhead shower 160 1jet LowPressure	26576000	12/31/2020
Showerpipes and shower panels		
Raindance E Showerpipes		
Showerpipe 360 1jet EcoSmart 9 l/min with ShowerTablet Select 300	27287000 27287400	12/31/2019

Phase out products	Code no.	available up to
Showerpipes and shower panels		
Croma Select E Showerpipes		
SemiPipe Multi EcoSmart 9 l/min with thermostat	27259400	12/31/2020
Croma Select S Showerpipes		
SemiPipe Multi EcoSmart 9 l/min with thermostat	27249400	12/31/2020
Raindance shower panels		
Shower panel Lift 180 2jet EcoSmart 9 l/min for exposed installation	27003400	12/31/2019
Thermostatic mixers / valves		
Thermostatic mixers for exposed installation		
ShowerTablet		
Shower thermostat 350 for exposed installation	13102000 13102400	12/31/2020
Bath thermostat 350 for exposed installation	13107000 13107400	12/31/2020
Thermostat 600 universal for exposed installation for 2 functions	13108000 13108400	12/31/2020
Bath thermostat 600 for exposed installation	13109000 13109400	12/31/2020
Raindance Select E shower sets with thermostatic mixer for exposed installation		
Shower system for exposed installation 120 with ShowerTablet Select thermostat and shower bar 65 cm	27026000 27026400	12/31/2020
Shower system for exposed installation 120 with ShowerTablet Select thermostat and shower bar 90 cm	27027000 27027400	12/31/2020
Crometta 85 shower sets with thermostatic mixer for exposed installation		
Shower system for exposed installation Vario with Ecostat universal thermostat and shower bar 65 cm	27058000	12/31/2020
Shower system for exposed installation Vario with Ecostat universal thermostat and shower bar 90 cm	27080000	12/31/2020
PuraVida thermostatic mixers and valves for concealed installation		
Thermostat HighFlow for concealed installation	15772000 15772400	12/31/2020
Thermostat for concealed installation with shut-off valve	15775000 15775400	12/31/2020
PuraVida		
3-hole basin mixer 100 with pop-up waste set	15063000	12/31/2020
3-hole basin mixer 100 with push-open waste set	15073000 15073400	12/31/2020
4-hole rim mounted bath mixer	15446000 15446400	12/31/2020
Single lever shower mixer HighFlow for concealed installation	15677000 15677400	12/31/2020

Phase out products	Code no.	available up to
PuraVida		
Thermostat HighFlow for concealed installation	15772000 15772400	12/31/2020
Thermostat for concealed installation with shut-off valve	15775000 15775400	12/31/2020
Overhead shower 400 1jet EcoSmart 9 l/min with shower arm	26602000 26602400	12/31/2020
Overhead shower 400 1jet EcoSmart 9 l/min with ceiling connector	26603000 26603400	12/31/2020
Metropol		
Metropol Classic		
3-hole basin mixer 110 with zero handles and pop-up waste set	31304000 31304090	12/31/2020
3-hole basin mixer 160 with zero handles and pop-up waste set	31305000 31305090	12/31/2020
Metris		
Metris		
3-hole basin mixer 100 with pop-up waste set	31083000	12/31/2020
Metris S		
Single lever basin mixer with pop-up waste set	31021000	12/31/2020
Single lever basin mixer 190 without waste set	31026000	12/31/2020
Metris Classic		
3-hole basin mixer 100 with pop-up waste set	31073000	12/31/2020
Single lever basin mixer 100 with pop-up waste set	31075000	12/31/2020
Single lever basin mixer 100 without waste set	31077000	12/31/2020
Single lever basin mixer 250 for washbowls with pop-up waste set	31078000	12/31/2020
Single lever bidet mixer with pop-up waste set	31275000	12/31/2020
4-hole rim mounted bath mixer	31314000	12/31/2020
Single lever bath mixer for exposed installation	31478000	12/31/2020
Single lever bath mixer for concealed installation	31485000	12/31/2020
Single lever shower mixer for exposed installation	31672000	12/31/2020
Single lever shower mixer for concealed installation	31676000	12/31/2020
Talis		
Talis Select S / Talis S		
Single lever basin mixer 80 for vented hot water cylinder with pop-up waste set	72016000	12/31/2020
Single lever basin mixer 140 without waste set	72114000	12/31/2020
3-hole basin mixer with pop-up waste set	72130000	12/31/2020

Phase out products	Code no.	available up to
Talis		
Talis Select S / Talis S		
3-hole rim mounted bath mixer	72415000	06/30/2020
Single lever shower mixer HighFlow for concealed installation	72607000	06/30/2020
Logis		
Logis Classic		
Pillar tap 70 for cold water without waste set	71135000	12/31/2020
Pillar tap 70 for hot water without waste set	71136000	12/31/2020
2-handle bath mixer for exposed installation	71240000	12/31/2020
2-handle shower mixer for exposed installation	71260000	12/31/2020
2-handle basin mixer 150 with pop-up waste set	71270000	12/31/2020
2-handle basin mixer 150 LowPressure without waste set	71271000	12/31/2020
2-handle basin mixer 150 with push-open waste set	71272000	12/31/2020
Shut-off valve for concealed installation	71976000	12/31/2020
Accessories		
Logis Classic		
Towel hook	41611000	12/31/2020
Towel holder twin-handle	41612000	12/31/2020
Grab rail	41613000	12/31/2020
Liquid soap dispenser	41614000	12/31/2020
Soap dish	41615000	12/31/2020
Bath towel rail	41616000	12/31/2020
Spare roll holder	41617000	12/31/2020
Toothbrush tumbler	41618000	12/31/2020
Roll holder with cover	41623000	12/31/2020
Roll holder without cover	41626000	12/31/2020
Toilet brush with tumbler wall-mounted	41632000	12/31/2020
Spare parts and accessories for showers, bath mixers and kitchen mixers		
Other mixers spare parts		
Rim mounted bath set	28380000	12/31/2020
Secuflex set	94109000	12/31/2019

New product	Code no.
Hand showers	
Rainfinity	
Hand shower 130 3jet	26864000 26864140 26864340 26864670 26864700 26864990
Hand shower 130 3jet EcoSmart	26865000 26865140 26865340 26865670 26865700 26865990
Baton hand shower 100 1jet	26866000 26866140 26866340 26866670 26866700 26866990
Baton hand shower 100 1jet EcoSmart	26867000 26867140 26867340 26867670 26867700 26867990
Raindance Select E	
Hand shower 120 3jet	26520140 26520340 26520670 26520700 26520990
Raindance Select S	
Hand shower 120 3jet	26530140 26530340 26530670 26530700 26530990
Hand shower 120 3jet EcoSmart	26531140 26531340 26531670 26531700 26531990
Shower sets / Shower bars / Shower holder	
Rainfinity shower sets	
Shower set 130 3jet with shower bar 90 cm and soap dish	27671000
Shower set 130 3jet EcoSmart with shower bar 90 cm and soap dish	27672000
Shower set 130 3jet with shower bar 150 cm and soap dishes	27673000
Shower set 130 3jet EcoSmart 9 l/min with shower bar 150 cm and soap dishes	27674000
Modern style wall bars	
Shower bar S Puro 90 cm with shower hose	28631140 28631340 28631670 28631700 28631990
Shower bar S Puro 65 cm with shower hose	28632140 28632340 28632670

New product	Code no.
Shower sets / Shower bars / Shower holder	
Modern style wall bars	
Shower bar S Puro 65 cm with shower hose	28632700 28632990
Rainfinity shower holder sets	
Shower holder set 130 3jet with shower hose 160 cm	26851000 26851700
Shower holder set 130 3jet with shower hose 125 cm	26852000 26852700
Shower holder set 100 1jet with shower hose 160 cm	26856000 26856700
Shower holder set 100 1jet with shower hose 125 cm	26857000 26857700
Modern style shower holder	
Shower holder Porter E	28387000 28387140 28387340 28387670 28387700 28387990
Modern style Fixfit Porter wall outlets	
Rainfinity Wall outlet Porter 500 with shower holder and shower shelf L	26843000 26843700
Rainfinity Wall outlet Porter 500 with shower holder and shower shelf R	26858000 26858700
Modern style Fixfit wall outlets	
Wall outlet Square with non-return valve	26455140 26455340 26455670 26455700 26455990
Wall outlet E without non-return valve	27454140 27454340 27454670 27454700 27454990
Shower hoses	
Isiflex shower hoses	
Shower hose 160 cm	28276140 28276340 28276670 28276700 28276990
Overhead showers	
Rainfinity overhead showers	
Overhead shower 250 1jet with wall connector	26226000 26226700
Overhead shower 250 1jet EcoSmart with wall connector	26227000 26227700
Overhead shower 250 1jet	26228000 26228140 26228340 26228670 26228700 26228990

New product	Code no.
Overhead showers	
Rainfinity overhead showers	
Overhead shower 250 1jet EcoSmart	26229000 26229140 26229340 26229670 26229700 26229990
Overhead shower 360 1jet with wall connector	26230000 26230140 26230340 26230670 26230700 26230990
Overhead shower 360 1jet	26231000 26231140 26231340 26231670 26231700 26231990
Overhead shower 250 3jet with wall connector	26232000 26232700
Overhead shower 250 3jet EcoSmart with wall connector	26233000 26233700
Overhead shower 360 3jet with wall connector	26234000 26234140 26234340 26234670 26234700 26234990
Raindance E overhead showers	
Overhead shower 300 1jet with shower arm	26238140 26238340 26238670 26238700 26238990
Overhead shower 300 1jet with ceiling connector	26250140 26250340 26250670 26250700 26250990
Croma E overhead showers	
Overhead shower 280 1jet	26257000
Overhead shower 280 1jet EcoSmart	26258000
Croma overhead showers	
Overhead shower 280 1jet	26220140 26220340 26220670 26220700 26220990
Overhead shower 280 1jet EcoSmart 9 l/min	26221140 26221340 26221670 26221700 26221990
Shower arms for overhead showers	
Shower arm 38.9 cm	27413140 27413340 27413670 27413700 27413990

New product	Code no.
Overhead showers	
Shower arms for overhead showers	
Shower arm square 38.9 cm	27694000 27694140 27694340 27694670 27694700 27694990
Ceiling connectors for overhead showers	
Ceiling connector S 30 cm	27389140 27389340 27389670 27389700 27389990
Ceiling connector S 10 cm	27393140 27393340 27393670 27393700 27393990
Rainfinity body showers	
Shoulder shower 500 1jet with shower shelf	26243000 26243700
Showerpipes and shower panels	
Rainfinity Showerpipe	
Basic set for Showerpipe 360 1jet for concealed installation	26840180
Showerpipe 360 1jet for concealed installation	26842000 26842700
Raindance Select S Showerpipes	
Showerpipe 240 1jet P with thermostat	27633140 27633340 27633670 27633700 27633990
Croma Select S Showerpipes	
Showerpipe 280 1jet with thermostat and hand shower Raindance Select S 120 3jet	26890140 26890340 26890670 26890700 26890990
Showerpipe 280 1jet EcoSmart 9 l/min with thermostat and hand shower Raindance Select S 120 3jet	26891140 26891340 26891670 26891700 26891990
Croma E Showerpipes	
Showerpipe 280 1jet with thermostat	27630000
Showerpipe 280 1jet EcoSmart with thermostat	27660000
Showerpipe 280 1jet with bath thermostat	27687000
Thermostatic mixers / valves	
Ecostat thermostatic mixers for exposed installation	
Bath thermostat Comfort for exposed installation	13114140 13114340 13114670 13114700 13114990

New product	Code no.
Thermostatic mixers / valves	
Ecostat thermostatic mixers for exposed installation	
Shower thermostat Comfort for exposed installation	13116140 13116340 13116670 13116700 13116990
Shower thermostat for exposed installation	15773000
Bath thermostat for exposed installation	15774000
RainSelect thermostatic mixers for concealed installation	
Thermostat for concealed installation for 2 functions	15380000 15380140 15380340 15380670 15380700 15380990
Thermostat for concealed installation for 3 functions	15381000 15381700
Thermostat for concealed installation for 4 functions	15382000 15382140 15382340 15382670 15382700 15382990
Thermostat for concealed installation for 5 functions	15384000 15384700
ShowerSelect thermostatic mixers for concealed installation	
Thermostat for concealed installation for 2 functions	15763140 15763340 15763670 15763700 15763990
ShowerSelect S thermostatic mixers for concealed installation	
Thermostat for concealed installation for 2 functions	15743140 15743340 15743670 15743700 15743990
Optional parts - buttons	
Symbol showerhead Rain large	93571670 93571700
Symbol showerhead Rain small	93572670 93572700
Symbol handshower	93573670 93573700
Symbol Rain Flow	93574670 93574700
Symbol Whirl	93575670 93575700
Symbol Mono	93576670 93576700
Symbol Tub	93577670 93577700
Symbol Body spray	93578670 93578700
Symbol ON/OFF	93579670 93579700

New product	Code no.
Ecostat Square thermostatic mixers for concealed installation	
Thermostat for concealed installation for 2 functions	15714140 15714340 15714670 15714700 15714990
Ecostat S thermostatic mixers for concealed installation	
Thermostat for concealed installation for 2 functions	15758140 15758340 15758670 15758700 15758990
iBox universal	
iBox universal	
Assembly aid for iBox universal	93500000
Metropol	
Single lever basin mixer 100 with lever handle for hand washbasins with push-open waste set	32500140 32500340 32500670 32500700 32500990
Single lever basin mixer 110 with lever handle and push-open waste set	32507140 32507340 32507670 32507700 32507990
Single lever basin mixer 230 with lever handle and push-open waste set	32511140 32511340 32511670 32511700 32511990
Single lever basin mixer 260 with lever handle for washbowls with push-open waste set	32512140 32512340 32512670 32512700 32512990
3-hole basin mixer 160 with lever handles and push-open waste set	32515140 32515340 32515670 32515700 32515990
Single lever bidet mixer with lever handle and push-open waste set	32520140 32520340 32520670 32520700 32520990
Single lever basin mixer for concealed installation wall-mounted with lever handle and spout 22.5 cm	32526140 32526340 32526670 32526700 32526990
Single lever bath mixer floor-standing with lever handle	32532140 32532340 32532670 32532700 32532990

New product	Code no.
Metropol	
Single lever bath mixer for exposed installation with lever handle	32540140 32540340 32540670 32540700 32540990
Bath spout	32543140 32543340 32543670 32543700 32543990
Single lever bath mixer for concealed installation with lever handle	32545140 32545340 32545670 32545700 32545990
Single lever bath mixer for concealed installation with lever handle and integrated security combination according to EN1717	32546140 32546340 32546670 32546700 32546990
Single lever shower mixer for exposed installation with lever handle	32560140 32560340 32560670 32560700 32560990
Single lever shower mixer for concealed installation with lever handle	32565140 32565340 32565670 32565700 32565990
Talis	
Talis E	
Single lever bath mixer for concealed installation with integrated security combination according to EN1717	71474140 71474340 71474670 71474700 71474990
Single lever basin mixer 110 with pop-up waste set	71710140 71710340 71710670 71710700 71710990
Single lever basin mixer 110 without waste set	71712140 71712340 71712670 71712700 71712990
Single lever basin mixer 110 CoolStart with pop-up waste set	71713140 71713340 71713670 71713700 71713990
Single lever basin mixer 110 CoolStart without waste set	71714140 71714340 71714670 71714700 71714990
Single lever basin mixer 240 with pop-up waste set	71716140 71716340 71716670 71716700 71716990

New product	Code no.
Talis	
Talis E	
Single lever basin mixer 240 without waste set	71717140 71717340 71717670 71717700 71717990
Single lever bidet mixer with pop-up waste set	71720140 71720340 71720670 71720700 71720990
3-hole basin mixer with pop-up waste set	71733140 71733340 71733670 71733700 71733990
Single lever basin mixer for concealed installation wall-mounted with spout 22.5 cm	71734140 71734340 71734670 71734700 71734990
Single lever bath mixer for exposed installation	71740140 71740340 71740670 71740700 71740990
Single lever bath mixer for concealed installation	71745140 71745340 71745670 71745700 71745990
4-hole rim mounted bath mixer	71748140 71748340 71748670 71748700 71748990
Single lever basin mixer 150 with pop-up waste set	71754140 71754340 71754670 71754700 71754990
Single lever shower mixer for exposed installation	71760140 71760340 71760670 71760700 71760990
Single lever shower mixer for concealed installation	71765140 71765340 71765670 71765700 71765990
Accessories	
Rainfinity	
Shelf 500	26844000 26844700

New product	Code no.
Accessories	
RainScent	
Starter kit (shower case plus 2 tabs)	21140700
Wellness kit rosemary/citrus (package of 5 shower tabs)	21141000
Wellness kit lavender (package of 5 shower tabs)	21142000
Wellness kit pomegranate (package of 5 shower tabs)	21143000
Wellness kit bergamot (package of 5 shower tabs)	21144000
Wellness kit silver fir (package of 5 shower tabs)	21145000
Wellness kit mix (package of 5 shower tabs)	21146000
Wastes and overflow	
Bath filler with wastes and overflow for bath tub	
Finish set bath filler, waste and overflow set	58117140 58117340 58117670 58117700 58117990
Rim and tile mounted bath basic set	13560180
Finish set square	28010000 28010140 28010340 28010670 28010700 28010990
Installation plate for tile mounted installation	28016000
Wastes and overflow	
Bath filler with wastes and overflow for bath tub	
Finish set oval	28020000
Mounting angle for installation plate for tile mounted installation	28021000
Wastes and overflow for bath tub	
Finish set waste and overflow set	58185140 58185340 58185670 58185700 58185990
Wastes for basin/ bidet	
Waste set push-open for basin and bidet mixers	50100140 50100340 50100670 50100700 50100990
Traps	
Design trap Flowstar S	52105140 52105340 52105670 52105700 52105990
Cover	13950140 13950670 13950700 13950990

New product	Code no.
Kitchen mixers	
Aquno Select M81	
Single lever kitchen mixer 250, pull-out spout, 2jet, sBox	73830000 73830800
Single lever kitchen mixer 170, pull-out spray, 3jet, sBox	73831000 73831800
Single lever kitchen mixer 250, pull-out spout, 2jet	73836000 73836800
Single lever kitchen mixer 170, pull-out spray, 3jet	73837000 73837800
Metris Select M71	
Single lever kitchen mixer 320, Eco, 1jet	14785000
Single lever kitchen mixer 320, Eco, pull-out spout, 1jet	14786000
Single lever kitchen mixer 320, Eco, pull-out spout, 1jet, sBox	73807000
2-hole single lever kitchen mixer 200, pull-out spray, 2jet, sBox	73818340 73818670
2-hole single lever kitchen mixer 200, pull-out spray, 2jet	73819000 73819800
Single lever kitchen mixer 320, pull-out spray, 2jet	73820000 73820800
Single lever kitchen mixer 240, pull-out spray, 2jet	73822000 73822800
2-hole single lever kitchen mixer 200, Eco, pull-out spout, 1jet, sBox	73825000
2-hole single lever kitchen mixer 220, Eco, pull-out spray, 2jet, sBox	73826000
Metris Select M71	
2-hole single lever kitchen mixer 320, Eco, pull-out spray, 2jet, sBox	73827000
Metris M71	
Single lever kitchen mixer 320, Eco, pull-out spray, 2jet	14780000
Single lever kitchen mixer 320, Eco, pull-out spout, 1jet	14781000
Single lever kitchen mixer 320, Eco, 1jet	14782000
Single lever kitchen mixer 220, Eco, pull-out spray, 2jet, sBox	73823000
Single lever kitchen mixer 320, Eco, pull-out spray, 2jet, sBox	73824000
Single lever kitchen mixer 320, Eco, pull-out spout, 1jet, sBox	73828000
Talis Select M51	
Single lever kitchen mixer 300, pull-out spray, 2jet	72823000 72823800
Single lever kitchen mixer 220, pull-out spray, 2jet	72824000 72824800
Single lever kitchen mixer 300, Eco, 1jet	72825000
Single lever kitchen mixer 300. Eco, pull-out spout, 1jet	72826000
Talis M51	
Single lever kitchen mixer 260, Eco, 1jet	72816000
Single lever kitchen mixer 200, Eco, pull-out spray, 2jet	72817000
Single lever kitchen mixer 200, Eco, pull-out spray, 2jet, sBox	73876000
Talis M52	
Single lever kitchen mixer 170, Eco, pull-out spray, 2jet	32845000

New product	Code no.
Kitchen mixers	
Talis M52	
Single lever kitchen mixer 170, Eco, 1jet	32857000
Single lever kitchen mixer 220, Eco, pull-out spray, 2jet	72831000
Single lever kitchen mixer 260, Eco, pull-out spout, 1jet	72832000
Single lever kitchen mixer 170, Eco, pull-out spray, 2jet, sBox	73869000
Single lever kitchen mixer 260, Eco, pull-out spout, 1jet, sBox	73878000
Single lever kitchen mixer 220, Eco, pull-out spray, 2jet, sBox	73879000
Talis M54	
Single lever kitchen mixer 210, pull-out spray, 2jet	72800000 72800670 72800800
Single lever kitchen mixer 210, pull-out spray, 2jet, sBox	72801000 72801670 72801800
Single lever kitchen mixer 210, pull-out spout, 1jet	72802000 72802670 72802800
Single lever kitchen mixer 210, pull-out spout, 1jet, sBox	72803000 72803670 72803800
Single lever kitchen mixer 220, 1jet	72804000 72804670 72804800
Single lever kitchen mixer U 220, 1jet	72806000 72806670 72806800
Single lever kitchen mixer 270, pull-out spout, 1jet	72808000 72808670 72808800
Single lever kitchen mixer 270, pull-out spout, 1jet, sBox	72809000 72809670 72809800
Single lever kitchen mixer 270, 1jet	72840000 72840670 72840800
Single lever kitchen mixer 210, Eco, pull-out spray, 2jet	72842000 72842670
Single lever kitchen mixer 220, Eco, 1jet	72843000 72843670
Single lever kitchen mixer U 220, Eco, 1jet	72844000 72844670
Single lever kitchen mixer 270, Eco, pull-out spout, 1jet	72845000 72845670
Focus M41	
Single lever kitchen mixer 240, pull-out spray, 2jet	31815670
Single lever kitchen mixer 280, 1jet	31817670
Single lever kitchen mixer 260, 1jet	31820670
Single lever kitchen mixer 260, Eco, 1jet	31821000 31821800
Single lever kitchen mixer 160, Eco, 1jet	31826000
Single lever kitchen mixer 280, Eco, 1jet	31827000
Single lever kitchen mixer 240, Eco, pull-out spray, 2jet	31833000
Single lever kitchen mixer 240, Eco, pull-out spray, 2jet, sBox	73895000

New product	Code no.
Kitchen mixers	
Focus M42	
Single lever kitchen mixer 160, Eco, 1jet	71860000
Single lever kitchen mixer 260, Eco, 1jet	71861000
Single lever kitchen mixer 180, Eco, pull-out spray, 2jet	71862000
Single lever kitchen mixer 120, CoolStart, Eco, 1jet	71864000
Single lever kitchen mixer 150, Eco, pull-out spout, 1jet	71865000
Single lever kitchen mixer 100, CoolStart, Eco, 1jet	71866000
Logis M32	
2-handle kitchen mixer 220, Eco, 1jet	71283000
2-handle kitchen mixer, Eco, wall-mounted highspout, 1jet	71284000
Stainless steel built-in sinks	
S411-F340 Built-in sink 340/400	43334800
S411-F400 Built-in sink 400/400	43335800
S411-F500 Built-in sink 500/400	43336800
S4113-F340 Built-in sink 340/400 with drainboard	43337800
S4113-F400 Built-in sink 400/400 with drainboard	43338800
S4113-F540 Built-in sink 340/150/400 with drainboard	43339800
S4111-F340 Built-in sink 340/400 with drainboard	43340800
Stainless steel built-in sinks	
S4111-F400 Built-in sink 400/400 with drainboard	43341800
S4111-F540 Built-in sink 340/150/400 with drainboard	43342800
Optional parts for stainless steel sinks	
D14-10 Manual waste and overflow set for sink 660	43921800
D15-10 Manual waste and overflow set for sink 370/370	43922800
D14-11 Automatic waste and overflow set for sink 660	43931800
D15-11 Automatic waste and overflow set for sink 370/370	43932800
D14-12 Automatic waste and overflow set for sink 660 Select	43941800
D15-12 Automatic waste and overflow set for sink 370/370 Select	43942800
Kitchen accessories	
F17 Mobile drainboard	40962800
F14 Multifunctional strainer	40963000
F18 Cleaner stainless steel	40964000
F20 Cleaner set quartz composite	40965000
F19 Cleaner stainless steel mini	40966000

Packaging units

Please consider the packaging units when placing your order.

code no.	Number Of Items Per PackingUnit
01	
01850180	10
06	
06010000	2500
10	
10452180	6
10823000	30
10823800	30
13	
13111000	4
13114000	7
13114140	7
13114340	7
13114670	7
13114700	7
13114990	7
13115000	7
13116000	10
13116140	8
13116340	8
13116670	8
13116700	8
13116990	8
13117000	7
13122000	10
13123000	7
13132000	20
13141000	2
13141400	2
13151000	4
13151400	4
13159180	10
13161000	4
13161400	4
13171000	4
13171400	4
13201000	7
13211000	10
13233180	5
13244180	4
13356000	7
13414000	35
13423000	20
13424000	15
13425000	20
13425090	20
13437180	2
13444180	2
13595000	50
13596000	40
13604000	20
13620180	24
13622180	25
13912000	750
13913000	750
13950000	40
13952000	50
13954000	50
13954820	36
13961000	200
13964000	100
14	
14095000	56
14096000	56
14420000	28
14495000	28
14820000	4
14820800	4
14821000	4
14821800	4
14822000	4
14822800	4
14823000	4
14834000	4
14834800	4
14847000	4
14847800	4
14857000	4
14857800	4
14870000	10
14875000	4
14883000	4
14883800	4
14884000	4
14884800	4
14888000	4
14893000	36
14920000	20
15	
15070000	7
15070400	7
15072000	4
15072400	4
15074000	6
15074400	7
15075000	10
15075400	10
15081000	4
15081400	4
15084000	4
15084400	4
15085000	4
15085400	4
15170000	4
15170400	4
15172000	6
15270000	10
15270400	10
15275400	6
15310180	3
15311180	3
15355000	2
15355400	2
15356000	2
15356400	2
15357000	2
15357400	2
15358000	3
15358400	2
15412000	15
15412400	15
15432000	2
15432400	3
15445000	10
15445400	10
15447000	10
15472000	5
15472400	5
15597000	17
15665000	10
15665400	10
15672000	5
15672400	5
15705000	12
15706000	9
15707000	9
15708000	10
15712000	6
15714000	10
15714140	6
15714340	10
15714670	6
15714700	6
15714990	6
15734400	12
15734600	12
15735400	6
15735600	12
15736400	12
15736600	6
15737400	12
15737600	12
15738400	10
15738600	9
15741000	10
15742000	9
15743000	10
15744000	10
15745000	10
15747000	9
15748000	9
15755000	6
15756000	9
15757000	10
15758000	10
15760000	10
15761000	10
15762000	10
15763000	10
15763140	6
15763670	6
15763700	6
15764000	10
15765000	6
15767000	9
15768000	10
15771000	10
15771400	10
15777000	10
15930180	25
15932000	25
15970180	25
15972000	40
15973180	50
15974180	50
15978000	38
15978400	38
15981180	20
16	
16884000	100
16884820	80
19	
19418000	2
24	
24010180	6
26	
26014000	22
26220000	6
26221000	6
26238000	3
26238140	3
26238340	3
26238670	3
26238700	3
26238990	3
26239000	3
26250000	3
26250140	3
26250340	3
26250670	3
26250700	3
26250990	3
26251000	3
26252000	3
26253000	3
26254180	6
26320000	10
26320400	10
26321000	10
26321400	10
26322000	3
26322400	3
26323000	5
26323400	3
26325000	2
26325400	2
26326000	2
26326400	2
26327000	2
26327400	2
26328400	9
26329000	15
26330400	24
26331400	24
26332400	24

code no.	Number Of Items Per PackingUnit
26333400	24
26334400	24
26336400	24
26401000	10
26402000	5
26403400	2
26404400	2
26410400	20
26411400	20
26412400	20
26413400	20
26420400	20
26421400	20
26424400	20
26425400	20
26442000	10
26443000	10
26453000	110
26455000	110
26455140	110
26455340	110
26455670	110
26455700	110
26455990	110
26456000	10
26456400	10
26457000	168
26464000	7
26465000	7
26466000	6
26466400	6
26467000	6
26467400	7
26468000	2
26468400	2
26469000	6
26470000	6
26470400	6
26471180	10
26472000	6
26481000	6
26485000	40
26486000	25
26487000	25
26503000	16
26504000	8
26505000	12
26506000	6
26511000	24
26511400	24
26511600	24
26519000	38
26520000	25
26520140	20
26520340	20
26520400	25
26520670	20
26520700	20
26520990	20
26521000	25
26521400	24
26522000	4
26522400	7
26523000	7
26523400	4
26524000	4
26524400	4
26528000	4
26528400	4
26530000	20
26530400	20
26531000	25
26531400	25
26532400	10
26533400	10
26534400	10
26535400	10
26536400	7
26537400	4
26538400	4
26550000	28
26550400	28
26551000	30
26551400	28
26553400	12
26554400	10
26555400	14
26560400	10
26561400	10
26562400	10
26563400	10
26564400	10
26565400	12
26566400	10
26567400	20
26568400	20
26569400	14
26570400	7
26571400	7
26572400	7
26573400	7
26574400	7
26575400	4
26577000	4
26577400	4
26578000	10
26578400	4
26580400	10
26581400	12
26582400	10
26583400	10
26584400	10
26585400	12
26586400	10
26590400	7
26591400	7
26592400	6
26593400	7
26594400	7
26595400	7
26600000	3
26601000	6
26604000	4
26605000	4
26608000	4
26608400	4
26609000	4
26609400	4
26620000	16
26620400	16
26621000	7
26621400	7
26622000	12
26622400	12
26623000	6
26623400	6
26626000	6
26626400	6
26630000	16
26630400	16
26631000	7
26631400	5
26632000	12
26632400	12
26633000	6
26633400	5
26650400	10
26651400	10
26652400	16
26654400	12
26655400	3
26656400	7
26657400	7
26658400	7
26664400	20
26665400	20
26666400	20
26667400	20
26690400	20
26691400	20
26692400	20
26693400	15
26694400	14
26700000	20
26700400	20
26701000	20
26701400	20
26720000	20
26720400	20
26721000	20
26722000	4
26723000	10
26723340	4
26724000	4
26725000	4
26726000	10
26727000	4
26790000	2
26794000	2
26800400	24
26801400	24
26802400	24
26803400	24
26804400	24
26805400	34
26806400	34
26810400	32
26811400	34
26812400	32
26813400	32
26814400	32
26815400	34
26816400	34
26823400	24
26824400	24
26825400	24
26826400	34
26827400	34
26828400	34
26829400	30
26840180	8
26864000	26
26864700	15
27	
27013400	7
27014400	5
27030400	8
27031400	5
27032000	6
27033000	3
27034000	7
27035000	3
27038000	2
27081400	7
27082400	5
27085000	4
27086000	8
27114000	2
27115000	2
27116000	2
27129000	2
27129400	2
27133000	2
27133400	2
27135000	2
27154000	2
27185000	2
27188000	2
27222000	2
27224000	2
27256400	2
27267000	2
27268000	2
27269000	2
27270000	2

Packaging units

Please consider the packaging units when placing your order.

code no.	Number Of Items Per PackingUnit
27271000	2
27281000	2
27284000	2
27289000	2
27337000	6
27337400	6
27355000	10
27356000	10
27370000	4
27371000	4
27375000	4
27376000	4
27378000	6
27378400	6
27380000	4
27381000	4
27383000	4
27384000	4
27384400	4
27385000	4
27385400	4
27388000	7
27389000	7
27390000	2
27390400	2
27393000	9
27405000	7
27405090	7
27409000	20
27411000	48
27412000	15
27413000	20
27414000	150
27424000	5
27424090	7
27437000	2
27437400	2
27438000	36
27441000	26
27446000	20
27450000	20
27452000	20
27453000	100
27454000	100
27458000	100
27461000	6
27462000	7

code no.	Number Of Items Per PackingUnit
27463000	7
27464000	7
27467000	24
27468000	6
27474000	6
27476000	7
27477000	7
27478000	7
27479000	36
27492000	2
27493000	6
27494000	6
27505000	150
27506000	100
27521000	100
27558000	20
27559000	20
27568000	20
27574000	20
27575000	20
27576000	20
27577000	20
27592000	20
27593000	20
27594000	20
27595000	20
27607000	2
27609000	10
27610000	10
27611000	20
27614000	10
27615000	20
27617000	10
27617820	10
27620000	7
27623000	7
27636000	5
27640000	3
27640400	3
27640600	3
27645000	2
27645400	2
27645600	2
27646000	2
27646400	2
27647000	2
27647400	2

code no.	Number Of Items Per PackingUnit
27648000	3
27648400	3
27649000	3
27649400	3
27651000	6
27652000	12
27653000	7
27654000	4
27655000	7
27667000	7
27671000	4
27742000	13
27764000	12
27776000	12
27791000	7
27802000	10
27802400	10
27803000	5
27803400	5
27812400	7
27813400	3
27841000	6
27841090	5
27843000	10
27843090	14
27844000	6
27853000	5
27853400	5
27856000	10
27856400	10
27857000	5
27857400	5
28	
28010000	5
28072000	870
28132000	25
28134000	25
28136000	25
28248000	25
28249000	25
28272450	25
28276140	25
28276340	25
28276450	25
28276670	25
28276700	25
28276800	25

code no.	Number Of Items Per PackingUnit
28276990	25
28307000	20
28321000	200
28324000	100
28331000	100
28331800	105
28335000	30
28346000	180
28387140	105
28387340	105
28387670	105
28387700	105
28387990	105
28389000	2
28423000	50
28424000	32
28425000	25
28430000	40
28430400	40
28466000	48
28467000	80
28537000	24
28538000	24
28539000	25
28548000	12
28548090	15
28557000	35
28557400	20
28558000	40
28558400	40
28567000	15
28567400	20
28568000	30
28568400	35
28580000	24
28583000	24
28585000	35
28587000	20
28587400	20
28588000	20
28588400	20
28631000	10
28632000	20
28632140	20
28632340	20
28632670	20
28632700	20

code no.	Number Of Items Per PackingUnit
28632990	20
28650000	170
28662000	10
28663000	8
28675000	60
28678000	40
28679000	60
28684000	50
28694000	100
28698000	6
31	
31016000	10
31022000	4
31023000	4
31060000	10
31068000	10
31080000	10
31081000	6
31082000	4
31084000	10
31085000	4
31086000	3
31087000	5
31088000	10
31100000	4
31101000	4
31102000	4
31103000	4
31121000	10
31130000	10
31159000	6
31160000	10
31161000	5
31162000	4
31163000	4
31171000	4
31172000	4
31173000	4
31174000	8
31183000	5
31184000	4
31185000	5
31186000	10
31187000	6
31190000	2
31261000	10
31280000	10

code no.	Number Of Items Per PackingUnit
31285000	4
31300000	10
31300090	10
31301000	10
31301090	10
31302000	3
31302090	3
31303000	3
31320000	10
31320090	10
31340000	8
31340090	8
31345000	8
31345090	8
31360000	8
31360090	8
31365000	8
31365090	8
31422000	2
31423000	2
31442000	2
31451000	12
31454000	12
31456000	12
31460000	8
31465000	10
31466000	10
31480000	8
31493000	10
31494000	20
31509000	10
31513000	10
31517000	10
31518000	4
31519000	2
31521000	4
31523000	4
31531000	4
31532000	5
31539000	10
31603000	10
31604000	10
31607000	10
31608000	5
31609000	6
31621000	10
31629000	6

code no.	Number Of Items Per PackingUnit
31657000	10
31658000	4
31660000	8
31665000	10
31677000	40
31680000	8
31685000	9
31686000	15
31730000	10
31732000	10
31733000	10
31738000	10
31741180	20
31780000	10
31784000	10
31803000	6
31804000	10
31806000	10
31815000	4
31815670	4
31816000	10
31817000	10
31817670	4
31820000	10
31820670	4
31822000	10
31823000	4
31825000	8
31910000	8
31911000	5
31913000	6
31914000	5
31915000	5
31916000	2
31920000	10
31922000	10
31926000	10
31927000	8
31928000	10
31930000	10
31931000	10
31938000	8
31940000	8
31945000	10
31946000	10
31947000	25
31948000	8

code no.	Number Of Items Per PackingUnit
31951000	10
31952000	7
31960000	8
31965000	10
31967000	25
31968000	8
31971000	50
32	
32031000	10
32032000	10
32070000	6
32122000	15
32127000	20
32128000	20
32129000	20
32420000	8
32475000	10
32477000	10
32500000	5
32501000	5
32502000	5
32503000	5
32506000	5
32507000	5
32507140	5
32507340	5
32507670	5
32507700	5
32507990	5
32508000	5
32511000	2
32512000	3
32520000	5
32522000	3
32525000	6
32526000	9
32540000	6
32542000	20
32543000	5
32545000	6
32546000	6
32560000	6
32565000	6
32570000	5
32571000	5
32572000	4
32620000	8

code no.	Number Of Items Per PackingUnit
32675000	10
32841000	10
32851000	10
40	
40068000	48
40088000	48
40418000	15
40418800	15
40438000	15
40438800	15
40448000	15
40448800	15
40468000	15
40468800	15
40511000	125
40511820	80
40512000	15
40512820	6
40513000	20
40513820	6
40514000	12
40514820	12
40515000	18
40515820	6
40516000	18
40516820	20
40517000	30
40517820	36
40518000	18
40518820	6
40522000	10
40522820	10
40523000	32
40523820	10
40526000	30
40526820	10
40950000	50
40951000	50
40952800	90
41	
41501000	125
41502000	6
41503000	6
41504000	6
41505000	12
41506000	15
41508000	15

code no.	Number Of Items Per PackingUnit
41512000	10
41513000	15
41518000	25
41710000	30
41711000	200
41712000	18
41713000	30
41714000	30
41715000	30
41716000	25
41717000	24
41718000	40
41720000	4
41722000	6
41723000	30
41724000	9
41725000	75
41726000	75
41727000	3
43	
43927000	4
43928000	4
43937000	4
43938000	6
43948000	3
50	
50001000	80
50100000	30
52	
52105000	30
52105140	24
52105340	24
52105670	24
52105700	24
52105990	24
52120000	20
53	
53646000	14
53990000	100
56	
56373000	14
58	
58117000	50
58127000	50
58185000	100
58185990	100
58186000	80

Packaging units

Please consider the packaging units when placing your order.

code no.	Number Of Items Per PackingUnit
58186820	80
60	
60056000	20
71	
71045000	6
71065000	6
71074000	10
71126000	2
71127000	3
71128000	2
71130000	6
71131000	6
71133000	4
71144000	7
71145000	4
71220000	4
71290000	10
71310000	5
71320000	20
71405000	10
71406000	15
71407000	10
71410000	20
71605000	10
71606000	20
71629000	5
71666000	9
71700000	10
71701000	10
71702000	10
71703000	10
71704000	10
71706000	10
71710000	10
71710140	10
71710340	10
71710670	10
71710700	10
71710990	10
71711000	10
71712000	10
71713000	10
71714000	10
71716000	4
71717000	4
71720000	10
71721000	10

code no.	Number Of Items Per PackingUnit
71729000	7
71732000	6
71733000	4
71734000	6
71734140	3
71734340	3
71734670	3
71734700	3
71734990	3
71745000	10
71750000	10
71751000	10
71752000	4
71753000	10
71754000	6
71755000	5
71765000	10
71802000	4
71802800	4
71804000	10
71805000	10
71806000	10
71806800	10
71808000	6
71813000	3
71820000	6
71829000	3
71829800	3
71830000	10
71831000	10
71832000	10
71834000	3
71835000	10
71836000	10
71837000	10
71839000	10
71970000	50
72	
72010000	10
72011000	10
72012000	10
72013000	10
72014000	10
72017000	10
72020000	10
72021000	10
72022000	10

code no.	Number Of Items Per PackingUnit
72023000	10
72031000	5
72032000	8
72040000	10
72041000	10
72042000	10
72043000	10
72044000	7
72045000	5
72105000	6
72110000	8
72111000	9
72113000	5
72115000	4
72116000	6
72200000	10
72202000	10
72290000	6
72400000	8
72405000	9
72410000	20
72600000	8
72605000	12
72810000	4
72810800	4
72811000	4
72813000	4
72813800	4
72814000	4
72814800	4
72815000	4
72815800	4
72820000	4
72820800	4
72821000	4
72821800	4
72822000	3
72822800	3
73	
73560000	4
73561000	6
73800000	6
73800800	6
73801000	6
73801800	6
73802000	6
73802800	4

code no.	Number Of Items Per PackingUnit
73803000	6
73803800	6
73804000	6
73804800	6
73805000	6
73805800	6
73806000	6
73806800	6
73812000	6
73812800	6
73850000	6
73850800	6
73851000	6
73851800	6
73852000	6
73852800	6
73853000	6
73853800	6
73860000	7
73860800	6
73880000	4
73880800	6
74	
74500000	5
74502000	5
74506000	5
74507000	5
74511000	2
74512000	4
74520000	5
74522000	4
74525000	6
74526000	6
74540000	8
74545000	10
74546000	10
74548000	30
74560000	8
74565000	10
92	
92019000	180
92601000	50
92631000	30
92730000	70
93	
93286000	20
93500000	32

code no.	Number Of Items Per PackingUnit
94	
94004000	30
94005000	200
94008000	90
94009000	120
94051000	200
94055000	80
94139000	20
94148000	25
94149000	200
94246000	800
94282000	50
94850000	200
95	
95048000	25
95052000	30
95053000	100
96	
96016000	160
96026000	50
96083000	50
96100000	1000
96153000	50
96170000	50
96177880	80
96179000	200
96184000	200
96186000	400
96188000	160
96189000	160
96190000	50
96191000	100
96192000	160
96339000	56
96387000	18
96441000	6
96467000	80
96529000	200
96615000	27
96618000	160
96657000	31
97	
97116000	20
97117000	20
97231000	160
97450000	4000
97462000	140

code no.	Number Of Items Per PackingUnit
98	
98066000	4500
98556000	80
98610000	160
98993000	100

Index Price brackets for Spare Parts

effective from 01.10.2019

Price bracket	finish (Euro*)	Price bracket	finish (Euro*)
1	2.30	51	3.50
2	3.70	52	5.60
3	6.10	53	9.20
4	8.20	54	12.30
5	10.10	55	15.20
6	13.20	56	19.80
7	16.30	57	24.50
8	20.40	58	30.60
9	26.10	59	39.20
10	32.30	60	48.50
11	41.50	61	62.30
12	51.10	62	76.70
13	62.40	63	93.60
14	72.70	64	109.10
15	90.50	65	135.80
16	117.40	66	176.10
17	147.80	67	221.70
18	181.00	68	271.50
19	239.10	69	358.70
20	290.70	70	436.10
21	390.90	71	586.40
22	552.50	72	828.80
23	791.20	73	1,186.80
24	1,564.60	74	2,346.90
98	Price find at this price book		
99	Price on request		

* Gross prices per piece, VAT not included.
Recommended retail prices.

brand	code no.	Euro	EAN	page
01				
HG	01800180	130.80	4011097347240	132
HG	01850180	169.90	4011097677545	246
02				
HG	02024000	4.30	4011097100005	119
HG	02026000	29.70	4011097729220	173
06				
HG	06010000	2.40	4011097100135	440
10				
AX	10452180	437.90	4011097254104	260
AX	10490000	72.70	4011097432601	548
AX	10823000	137.40	4011097693712	532
AX	10823800	206.10	4011097694566	532
AX	10890000	51.10	4011097460901	548
AX	10891000	51.10	4011097462110	548
11				
AX	11095000	72.70	4011097165110	544
AX	11098000	62.40	4011097257051	545
13				
HG	13085000	8.20	4011097102184	544
HG	13085810	10.10	4011097423449	544
HG	13097000	32.30	4011097102375	543
HG	13111000	347.20	4011097754161	213
HG	13111400	347.20	4011097753928	213
HG	13114000	295.20	4011097678832	215
HG	13114140	442.40	4059625229774	215
HG	13114340	442.40	4059625229781	215
HG	13114670	413.70	4059625229798	215
HG	13114700	413.70	4059625229804	215
HG	13114990	442.40	4059625229811	215
HG	13115000	318.50	4011097678849	216
HG	13116000	231.10	4011097678856	216
HG	13116140	347.10	4059625229828	216
HG	13116340	347.10	4059625229835	216
HG	13116670	323.60	4059625229842	216
HG	13116700	323.60	4059625229859	216
HG	13116990	347.10	4059625229866	216
HG	13117000	254.30	4011097678863	216
HG	13122000	207.50	4011097739205	220
HG	13123000	265.10	4011097739229	220
HG	13132000	136.90	4011097526058	349
HG	13141000	450.80	4011097661308	212
HG	13141400	450.80	4011097666402	212
HG	13151000	602.90	4011097717036	211
HG	13151400	602.90	4011097717029	211
HG	13159180	200.00	4011097835310	288
HG	13161000	347.20	4011097661315	213
HG	13161400	347.20	4011097665696	213
HG	13171000	450.80	4011097717012	211
HG	13171400	450.80	4011097717005	211
HG	13182000	11.50	4011097668482	544
HG	13183000	1,357.10	4011097771021	210
HG	13183400	1,357.10	4011097771014	210
HG	13184000	1,130.90	4011097771083	210
HG	13184400	1,130.90	4011097771076	210
HG	13201000	205.60	4011097799599	219
HG	13211000	162.10	4011097799582	219
HG	13233180	179.70	4011097629407	334
HG	13244180	275.20	4011097629414	292
AX	13290330	32.30	4011097189987	548
AX	13290430	32.30	4011097102979	548
AX	13290450	32.30	4011097102993	548
AX	13290480	32.30	4011097103013	548
AX	13290610	32.30	4011097183220	548

brand	code no.	Euro	EAN	page
HG	13356000	443.90	4011097438757	222
HG	13414000	103.90	4011097532509	350
HG	13423000	106.30	4011097603766	350
HG	13424000	115.20	4011097594774	350
HG	13425000	179.40	4011097801896	299
HG	13425090	228.40	4011097801889	299
HG	13437180	653.90	4011097660837	262
HG	13439180	333.40	4011097734033	290
HG	13444180	798.10	4011097140841	291
HG	13473000	72.70	4011097178233	545
AX	13485000	13.20	4011097104416	544
HG	13560180	50.00	4059625202968	432
HG	13593000	43.10	4011097745015	247
HG	13595000	46.50	4011097333670	247
HG	13596000	44.10	4011097393803	299
HG	13597000	44.10	4011097564739	240
HG	13601000	104.80	4011097783727	231
HG	13604000	92.40	4011097825915	230
HG	13620180	105.30	4011097228747	314
HG	13622180	210.00	4011097625386	258
AX	13690330	32.30	4011097190587	548
AX	13690430	32.30	4011097104997	548
AX	13690450	32.30	4011097105017	548
AX	13690480	32.30	4011097105031	548
AX	13690610	32.30	4011097177304	548
HG	13893000	90.50	4011097105444	549
HG	13893450	90.50	4011097105475	549
HG	13901000	15.50	4011097537122	438
HG	13902000	13.30	4011097537139	437
HG	13903000	14.40	4011097646411	437
HG	13904000	27.70	4011097666778	437
HG	13912000	12.90	4011097413747	544
HG	13913000	10.10	4011097413754	545
HG	13914000	10.30	4011097413761	545
HG	13950000	31.10	4011097350721	437
HG	13950140	46.70	4011097957050	437
HG	13950670	44.00	4059625266137	437
HG	13950700	44.00	4059625266144	437
HG	13950990	46.70	4011097957128	437
HG	13952000	26.10	4011097105932	543
HG	13954000	50.40	4011097360393	437
HG	13954820	75.60	4011097525532	437
HG	13961000	16.30	4011097105949	552
HG	13964000	32.30	4011097105970	543
HG	13970000	51.10	4011097105994	545
HG	13971000	62.40	4011097178578	545
HG	13981000	32.30	4011097177434	550
HG	13988000	90.50	4011097106557	552
HG	13989000	26.10	4011097106564	552
14				
HG	14091000	51.10	4011097177557	547
HG	14095000	72.70	4011097165103	543
HG	14096000	72.70	4011097176222	543
HG	14097000	72.70	4011097236995	543
HG	14098000	72.70	4011097237008	543
HG	14420000	171.50	4011097488424	319
HG	14495000	93.60	4011097255705	321
HG	14780000	464.00	4059625195970	453
HG	14781000	374.60	4059625197110	454
HG	14782000	317.00	4059625198100	455
HG	14785000	402.70	4059625197998	452
HG	14786000	475.00	4059625195994	449
HG	14820000	464.00	4011097718378	453
HG	14820800	602.90	4011097718361	453

brand	code no.	Euro	EAN	page
HG	14821000	374.60	4011097718354	454
HG	14821800	487.70	4011097718347	454
HG	14822000	317.00	4011097718170	455
HG	14822800	412.20	4011097718330	455
HG	14823000	374.60	4011097718323	455
HG	14834000	413.30	4011097823690	453
HG	14834800	537.20	4011097823683	453
HG	14847000	353.00	4011097823676	452
HG	14847800	459.40	4011097823669	452
HG	14857000	424.10	4011097823652	451
HG	14857800	551.30	4011097823645	451
HG	14870000	274.30	4011097386898	465
HG	14872000	406.70	4011097405032	464
HG	14875000	355.60	4011097391236	465
HG	14877000	480.80	4011097405049	463
HG	14883000	402.70	4011097748559	452
HG	14883800	513.00	4011097748566	452
HG	14884000	475.00	4011097772783	449
HG	14884800	617.50	4011097772790	449
HG	14888000	428.40	4011097752631	456
HG	14890000	51.10	4011097362274	547
HG	14891000	51.10	4011097217253	547
HG	14893000	90.50	4011097260303	549
HG	14896000	51.10	4011097508009	548
HG	14920000	118.80	4011097153759	551
15				
HG	15070000	435.40	4011097613253	257
HG	15070400	435.40	4011097613260	257
HG	15072000	668.10	4011097613291	258
HG	15072400	668.10	4011097613703	258
HG	15074000	435.40	4011097646725	257
HG	15074400	435.40	4011097646732	257
HG	15075000	420.50	4011097613277	257
HG	15075400	420.50	4011097613284	257
HG	15081000	515.20	4011097673608	257
HG	15081400	515.20	4011097672304	257
HG	15084000	538.80	4011097673615	258
HG	15084400	538.80	4011097673622	258
HG	15085000	566.60	4011097673639	258
HG	15085400	566.60	4011097673646	258
HG	15091000	72.70	4011097108537	547
HG	15170000	828.50	4011097660844	259
HG	15170400	828.50	4011097660851	259
HG	15172000	863.10	4011097660882	259
HG	15270000	495.50	4011097613734	259
HG	15270400	495.50	4011097613741	259
HG	15275400	519.60	4011097679259	257
HG	15310180	600.00	4011097815602	223
HG	15311180	700.00	4059625034057	224
HG	15312180	800.00	4059625034040	225
HG	15313180	900.00	4059625034033	226
HG	15314180	800.00	4059625034026	227
HG	15346000	255.90	4011097727219	222
HG	15355000	1,159.10	4059625034019	223
HG	15355400	1,159.10	4011097815619	223
HG	15355600	1,159.10	4059625034002	223
HG	15356000	1,369.80	4059625033999	224
HG	15356400	1,369.80	4059625033982	224
HG	15356600	1,369.80	4059625033975	224
HG	15357000	1,580.50	4059625033968	225
HG	15357400	1,580.50	4059625033951	225
HG	15357600	1,580.50	4059625033944	225
HG	15358000	1,791.30	4059625033937	226
HG	15358400	1,791.30	4059625033920	226

brand	code no.	Euro	EAN	page
HG	15358600	1,791.30	4059625033913	226
HG	15359000	1,369.80	4059625033906	226
HG	15359400	1,369.80	4059625032893	226
HG	15359600	1,369.80	4059625032886	226
HG	15380000	1,065.00	4059625201350	222
HG	15380140	1,598.00	4059625241707	222
HG	15380340	1,598.00	4059625241691	222
HG	15380670	1,384.50	4059625241684	222
HG	15380700	1,384.50	4059625201336	222
HG	15380990	1,598.00	4059625241677	222
HG	15381000	1,265.00	4059625201312	223
HG	15381700	1,644.50	4059625201299	223
HG	15382000	1,465.00	4059625201275	224
HG	15382140	2,198.00	4059625241967	224
HG	15382340	2,198.00	4059625241974	224
HG	15382670	1,904.50	4059625241981	224
HG	15382700	1,904.50	4059625201251	224
HG	15382990	2,198.00	4059625241998	224
HG	15384000	1,665.00	4059625201237	225
HG	15384700	2,164.50	4059625201213	225
HG	15412000	289.10	4011097613819	261
HG	15412400	289.10	4011097613826	261
HG	15432000	1,044.00	4011097673660	261
HG	15432400	1,044.00	4011097673677	261
HG	15445000	443.00	4011097613659	261
HG	15445400	443.00	4011097613666	261
HG	15447000	593.20	4011097613796	261
HG	15447400	593.20	4011097613802	261
HG	15472000	793.10	4011097613772	260
HG	15472400	793.10	4011097613789	260
HG	15473000	2,244.60	4011097625003	260
HG	15473400	2,244.60	4011097625010	260
HG	15597000	43.00	4011097625027	241
HG	15665000	390.60	4011097613833	262
HG	15665400	390.60	4011097613840	262
HG	15672000	631.20	4011097614908	262
HG	15672400	631.20	4011097614915	262
HG	15705000	229.70	4011097741727	238
HG	15706000	373.20	4011097741710	238
HG	15707000	373.20	4011097741703	238
HG	15708000	418.90	4011097741697	238
HG	15712000	373.20	4059625028728	237
HG	15714000	418.90	4059625028735	237
HG	15714140	628.70	4059625230244	237
HG	15714340	628.70	4059625230251	237
HG	15714670	586.80	4059625230268	237
HG	15714700	586.80	4059625230275	237
HG	15714990	628.70	4059625230282	237
HG	15734400	476.10	4011097777528	228
HG	15734600	476.10	4011097777627	228
HG	15735400	655.30	4011097777511	228
HG	15735600	655.30	4011097777610	228
HG	15736400	476.10	4011097777504	228
HG	15736600	476.10	4011097777603	228
HG	15737400	655.30	4011097777498	227
HG	15737600	655.30	4011097777597	227
HG	15738400	716.80	4011097777481	227
HG	15738600	716.80	4011097777580	227
HG	15741000	382.90	4011097741369	234
HG	15742000	530.00	4011097741352	235
HG	15743000	577.20	4011097741345	234
HG	15743140	865.80	4059625142424	234
HG	15743340	865.80	4059625244548	234
HG	15743670	808.10	4059625266069	234

brand	code no.	Euro	EAN	page
HG	15743700	808.10	4059625266076	234
HG	15743990	865.80	4059625266083	234
HG	15744000	530.00	4011097741338	234
HG	15745000	382.90	4011097741321	235
HG	15747000	441.80	4011097746388	235
HG	15748000	489.00	4011097749631	236
HG	15755000	229.70	4011097741680	239
HG	15756000	373.20	4011097741673	239
HG	15757000	373.20	4011097741666	239
HG	15758000	418.90	4011097741659	239
HG	15758140	628.40	4059625155028	239
HG	15758340	628.40	4059625216682	239
HG	15758670	586.50	4059625266038	239
HG	15758700	586.50	4059625266045	239
HG	15758990	628.40	4059625266052	239
HG	15760000	382.90	4011097719870	231
HG	15761000	530.00	4011097719863	232
HG	15762000	530.00	4011097719856	230
HG	15763000	577.20	4011097719849	230
HG	15763140	866.30	4059625230299	230
HG	15763340	866.30	4059625230909	230
HG	15763670	807.90	4059625230916	230
HG	15763700	807.90	4059625230923	230
HG	15763990	866.30	4059625230930	230
HG	15764000	382.90	4011097719832	232
HG	15765000	706.80	4011097719825	231
HG	15767000	441.80	4011097746364	233
HG	15768000	489.00	4011097749624	233
HG	15771000	1,163.60	4011097613918	240
HG	15771400	1,163.60	4011097613925	240
HG	15773000	270.00	4059625196076	215
HG	15774000	330.00	4059625196069	215
HG	15777000	418.80	4011097625324	241
HG	15930180	250.70	4011097345239	242
HG	15932000	121.20	4011097487984	240
HG	15956000	57.80	4011097629360	247
HG	15970180	87.50	4011097345208	241
HG	15972000	90.60	4011097487960	240
HG	15973180	80.60	4011097345215	242
HG	15974180	83.70	4011097345222	241
HG	15978000	142.50	4011097613932	241
HG	15978400	142.50	4011097613949	241
HG	15981180	159.00	4011097415772	242
HG	15984180	153.20	4011097727073	313
16				
AX	16092000	90.50	4011097150178	548
AX	16391000	41.50	4011097111483	549
AX	16884000	38.20	4011097515915	119
AX	16884820	57.30	4011097515922	119
AX	16891000	72.70	4011097235837	547
AX	16991000	41.50	4011097112367	549
AX	16993000	41.50	4011097112411	549
19				
AX	19418000	410.70	4011097664637	288
21				
HG	21140700	14.50	4059625250341	424
HG	21141000	9.90	4059625250358	424
HG	21142000	9.90	4059625250365	424
HG	21143000	9.90	4059625250372	425
HG	21144000	9.90	4059625250389	425
HG	21145000	9.90	4059625250396	425
HG	21146000	9.90	4059625250402	425
24				

brand	code no.	Euro	EAN	page
HG	24001400	2,488.00	4011097772219	132
HG	24001600	2,488.00	4011097983165	132
HG	24002400	1,470.30	4011097771182	136
HG	24002600	1,470.30	4011097975764	136
HG	24003400	1,583.30	4011097771243	135
HG	24003600	1,583.30	4011097983066	135
HG	24004400	1,922.60	4011097771304	135
HG	24004600	1,922.60	4011097983080	135
HG	24005400	2,035.60	4011097771366	134
HG	24005600	2,035.60	4011097983103	134
HG	24006400	2,148.70	4011097771380	133
HG	24006600	2,148.70	4011097983127	133
HG	24007400	2,261.90	4011097771397	133
HG	24007600	2,261.90	4011097983141	133
HG	24010180	226.20	4011097771175	134
HG	24011400	2,488.00	4011097772226	132
HG	24012400	1,470.30	4011097771151	134
HG	24013400	1,583.30	4011097771229	135
HG	24014400	1,922.60	4011097771281	135
HG	24015400	2,035.60	4011097771342	134
HG	24016400	2,148.70	4011097772202	133
HG	24017400	2,261.90	4011097772332	133
25				
HG	25968000	51.10	4011097460079	537
26				
HG	26014000	87.00	4059625136621	57
HG	26115000	4,057.60	4011097679174	143
HG	26117000	4,839.20	4011097679167	143
HG	26220000	315.40	4011097790992	152
HG	26220140	473.10	4059625264126	152
HG	26220340	473.10	4059625264102	152
HG	26220670	441.30	4059625264089	152
HG	26220700	441.30	4059625264096	152
HG	26220990	473.10	4059625264119	152
HG	26221000	317.40	4011097791104	152
HG	26221140	476.10	4059625203798	152
HG	26221340	476.10	4059625217030	152
HG	26221670	444.40	4059625264058	152
HG	26221700	444.40	4059625264065	152
HG	26221990	476.10	4059625264072	152
HG	26226000	690.00	4059625201084	128
HG	26226700	897.00	4059625201077	128
HG	26227000	690.00	4059625200780	128
HG	26227700	897.00	4059625200797	128
HG	26228000	580.00	4059625201565	129
HG	26228140	870.00	4059625264775	129
HG	26228340	870.00	4059625264751	129
HG	26228670	754.00	4059625264744	129
HG	26228700	754.00	4059625201558	129
HG	26228990	870.00	4059625264768	129
HG	26229000	580.00	4059625200902	129
HG	26229140	870.00	4059625264812	129
HG	26229340	870.00	4059625264799	129
HG	26229670	754.00	4059625264782	129
HG	26229700	754.00	4059625200919	129
HG	26229990	870.00	4059625264805	129
HG	26230000	790.00	4059625200926	130
HG	26230140	1,185.00	4059625264737	130
HG	26230340	1,185.00	4059625264713	130
HG	26230670	1,027.00	4059625264706	130
HG	26230700	1,027.00	4059625201541	130
HG	26230990	1,185.00	4059625264720	130
HG	26231000	680.00	4059625201534	130
HG	26231140	1,020.00	4059625264898	130

brand	code no.	Euro	EAN	page
HG	26231340	1,020.00	4059625264874	130
HG	26231670	884.00	4059625264867	130
HG	26231700	884.00	4059625201527	130
HG	26231990	1,020.00	4059625264881	130
HG	26232000	990.00	4059625201510	131
HG	26232700	1,287.00	4059625201503	131
HG	26233000	990.00	4059625201497	131
HG	26233700	1,287.00	4059625201480	131
HG	26234000	1,090.00	4059625201473	131
HG	26234140	1,635.00	4059625264850	131
HG	26234340	1,635.00	4059625264836	131
HG	26234670	1,417.00	4059625264829	131
HG	26234700	1,417.00	4059625201466	131
HG	26234990	1,635.00	4059625264843	131
HG	26238000	521.60	4011097853420	145
HG	26238140	782.30	4059625230718	145
HG	26238340	782.30	4059625230725	145
HG	26238670	730.10	4059625230732	145
HG	26238700	730.10	4059625230749	145
HG	26238990	782.30	4059625230756	145
HG	26239000	521.60	4011097975658	145
HG	26243000	450.00	4059625201435	160
HG	26243700	585.00	4059625201428	160
HG	26250000	490.00	4011097853413	146
HG	26250140	735.20	4059625191934	146
HG	26250340	735.20	4059625230763	146
HG	26250670	686.10	4059625230770	146
HG	26250700	686.10	4059625230787	146
HG	26250990	735.20	4059625230794	146
HG	26251000	490.00	4011097975665	146
HG	26252000	790.30	4011097975672	146
HG	26253000	790.30	4011097975689	146
HG	26254180	115.90	4011097975696	146
HG	26257000	315.00	4059625196106	152
HG	26258000	315.00	4059625196090	152
HG	26320000	261.00	4011097804330	76
HG	26320400	261.00	4011097787879	76
HG	26321000	261.00	4011097804323	76
HG	26321400	261.00	4011097787862	76
HG	26322000	271.90	4011097804316	76
HG	26322400	271.90	4011097787855	76
HG	26323000	271.90	4011097804309	76
HG	26323400	271.90	4011097787848	76
HG	26324000	380.60	4011097804293	74
HG	26324400	380.60	4011097787831	74
HG	26325000	380.60	4011097804286	74
HG	26325400	380.60	4011097787824	74
HG	26326000	380.60	4011097804279	75
HG	26326400	380.60	4011097787817	75
HG	26327000	380.60	4011097804262	75
HG	26327400	380.60	4011097787800	75
HG	26328400	130.50	4011097787794	413
HG	26329000	141.40	4011097787787	413
HG	26330400	19.50	4011097780689	62
HG	26331400	17.30	4011097780672	62
HG	26332400	21.60	4011097780665	62
HG	26333400	19.50	4011097780658	62
HG	26334400	19.50	4011097780641	414
HG	26336400	21.60	4011097792064	414
HG	26401000	174.00	4011097804255	107
HG	26402000	184.80	4011097804248	107
HG	26403400	293.60	4011097804231	106
HG	26404400	293.60	4011097804224	106
HG	26410400	61.40	4011097744872	111
HG	26411400	73.10	4011097744865	110
HG	26412400	61.40	4011097760285	110
HG	26413400	73.10	4011097760292	110
HG	26420400	58.10	4011097757025	111
HG	26421400	69.60	4011097757018	110
HG	26424400	58.10	4011097757049	110
HG	26425400	69.60	4011097757032	110
HG	26442000	254.70	4011097705941	145
HG	26443000	254.70	4011097705958	145
HG	26453000	24.90	4011097756868	118
HG	26455000	24.90	4011097756851	118
HG	26455140	36.90	4011097837291	118
HG	26455340	36.90	4011097837284	118
HG	26455670	34.80	4059625230947	118
HG	26455700	34.80	4059625230954	118
HG	26455990	36.90	4011097837390	118
HG	26456000	140.30	4011097814803	117
HG	26456400	140.30	4011097786902	117
HG	26457000	24.90	4011097756875	118
HG	26464000	218.20	4011097689678	153
HG	26465000	218.20	4011097689685	153
HG	26466000	410.60	4011097720562	139
HG	26466400	410.60	4011097720555	139
HG	26467000	375.40	4011097720548	139
HG	26467400	375.40	4011097720531	139
HG	26468000	762.60	4011097720487	136
HG	26468400	762.60	4011097720470	136
HG	26469000	375.40	4011097720524	139
HG	26470000	410.60	4011097720500	139
HG	26470400	410.60	4011097720494	139
HG	26471180	93.90	4011097718637	144
HG	26472000	410.60	4011097718620	144
HG	26481000	410.60	4011097718613	144
HG	26485000	78.40	4011097767536	117
HG	26486000	78.40	4011097767543	117
HG	26487000	78.40	4011097767550	117
HG	26503000	62.60	4011097756820	103
HG	26504000	68.40	4011097756837	103
HG	26505000	45.20	4011097773810	103
HG	26506000	50.90	4011097773803	103
HG	26511000	63.20	4011097857046	537
HG	26511400	63.20	4011097857039	537
HG	26511600	63.20	4011097961286	537
HG	26519000	18.40	4011097693200	107
HG	26520000	85.30	4011097706047	57
HG	26520140	128.00	4059625230824	57
HG	26520340	128.00	4059625221297	57
HG	26520400	85.30	4011097706085	57
HG	26520670	119.80	4059625230817	57
HG	26520700	119.80	4059625230800	57
HG	26520990	128.00	4059625230961	57
HG	26521000	85.30	4011097706054	57
HG	26521400	85.30	4011097706092	57
HG	26522000	231.80	4011097741956	141
HG	26522400	231.80	4011097741963	141
HG	26523000	231.80	4011097741970	141
HG	26523400	231.80	4011097741987	141
HG	26524000	231.80	4011097751993	140
HG	26524400	231.80	4011097752006	140
HG	26528000	231.80	4011097752068	140
HG	26528400	231.80	4011097752075	140
HG	26530000	85.30	4011097706764	57
HG	26530140	128.00	4059625264027	57
HG	26530340	128.00	4059625264010	57

brand	code no.	Euro	EAN	page
HG	26530400	85.30	4011097726663	57
HG	26530670	119.80	4059625263990	57
HG	26530700	119.80	4059625264003	57
HG	26530990	128.00	4059625026830	57
HG	26531000	85.30	4011097719115	57
HG	26531140	128.00	4059625265925	57
HG	26531340	128.00	4059625265901	57
HG	26531400	85.30	4011097726946	57
HG	26531670	119.80	4059625265888	57
HG	26531700	119.80	4059625265895	57
HG	26531990	128.00	4059625265918	57
HG	26532400	47.60	4011097792057	92
HG	26533400	45.50	4011097792040	93
HG	26534400	49.90	4011097792033	92
HG	26535400	47.60	4011097792026	93
HG	26536400	53.20	4011097792019	91
HG	26537400	50.90	4011097792002	93
HG	26538400	55.20	4011097791999	91
HG	26539400	53.20	4011097791982	93
HG	26550000	109.10	4011097720067	56
HG	26550400	109.10	4011097720050	56
HG	26551000	109.10	4011097720043	56
HG	26551400	109.10	4011097720036	56
HG	26553400	53.20	4011097791975	92
HG	26554400	47.60	4011097791968	93
HG	26555400	49.90	4011097791951	92
HG	26560400	117.60	4011097744858	80
HG	26561400	117.60	4011097736228	80
HG	26562400	103.10	4011097744841	81
HG	26563400	103.10	4011097736433	81
HG	26564400	91.60	4011097744834	82
HG	26565400	91.60	4011097736426	82
HG	26566400	109.10	4011097767048	83
HG	26567400	34.20	4011097791944	113
HG	26568400	34.20	4011097791937	113
HG	26569400	36.50	4011097791920	113
HG	26570400	123.40	4011097744827	80
HG	26571400	123.40	4011097736419	80
HG	26572400	109.10	4011097744810	81
HG	26573400	109.10	4011097736402	81
HG	26574400	97.40	4011097744803	82
HG	26575400	97.40	4011097736396	82
HG	26576400	137.80	4011097760384	155
HG	26577000	137.80	4011097756783	155
HG	26577400	137.80	4011097756905	155
HG	26578000	137.80	4011097756790	155
HG	26578400	137.80	4011097756493	155
HG	26580400	117.60	4011097753911	77
HG	26581400	117.60	4011097736389	77
HG	26582400	103.10	4011097753904	78
HG	26583400	103.10	4011097736372	78
HG	26584400	91.60	4011097753898	79
HG	26585400	91.60	4011097736365	79
HG	26586400	109.10	4011097767055	79
HG	26590400	123.40	4011097753881	76
HG	26591400	123.40	4011097736358	76
HG	26592400	109.10	4011097753850	77
HG	26593400	109.10	4011097736341	77
HG	26594400	97.40	4011097753843	78
HG	26595400	97.40	4011097736334	78
HG	26600000	630.70	4011097754369	148
HG	26601000	667.40	4011097754826	148
HG	26604000	587.90	4011097754383	146
HG	26605000	621.70	4011097754390	147

brand	code no.	Euro	EAN	page
HG	26606000	254.20	4011097761619	157
HG	26608000	509.40	4011097754840	137
HG	26608400	509.40	4011097754857	137
HG	26609000	545.90	4011097754864	137
HG	26609400	545.90	4011097754376	137
HG	26620000	177.70	4011097706061	68
HG	26620400	177.70	4011097706078	68
HG	26621000	183.70	4011097706306	68
HG	26621400	183.70	4011097706313	68
HG	26622000	177.70	4011097711799	68
HG	26622400	177.70	4011097712000	68
HG	26623000	183.70	4011097712017	68
HG	26623400	183.70	4011097712024	68
HG	26626000	330.40	4011097691893	69
HG	26626400	330.40	4011097692043	69
HG	26630000	177.70	4011097719108	71
HG	26630400	177.70	4011097726953	71
HG	26631000	183.70	4011097719092	70
HG	26631400	183.70	4011097726960	70
HG	26632000	177.70	4011097719085	71
HG	26632400	177.70	4011097726984	71
HG	26633000	183.70	4011097719078	70
HG	26633400	183.70	4011097726991	70
HG	26650400	84.80	4011097757124	88
HG	26651400	76.80	4011097757131	89
HG	26652400	70.80	4011097757148	90
HG	26654400	76.80	4011097760742	89
HG	26655400	70.80	4011097760735	90
HG	26656400	90.50	4011097757155	88
HG	26657400	82.40	4011097757162	89
HG	26658400	76.60	4011097757179	90
HG	26664400	42.00	4011097757186	112
HG	26665400	44.30	4011097760698	112
HG	26666400	48.00	4011097760681	112
HG	26667400	50.40	4011097760674	112
HG	26690400	32.10	4011097791913	113
HG	26691400	34.20	4011097791906	113
HG	26692400	36.50	4011097791890	113
HG	26693400	36.50	4011097791883	113
HG	26694400	38.60	4011097791876	113
HG	26700000	114.90	4011097808741	109
HG	26700400	114.90	4011097808734	109
HG	26701000	114.90	4011097808727	109
HG	26701400	114.90	4011097808710	109
HG	26720000	116.90	4011097758107	109
HG	26720400	116.90	4011097758114	109
HG	26721000	116.90	4011097758121	109
HG	26721400	116.90	4011097758138	109
HG	26722000	195.80	4011097770987	154
HG	26723000	195.80	4011097770970	155
HG	26723340	293.70	4059625172223	155
HG	26724000	197.90	4011097770963	155
HG	26725000	195.80	4011097770956	155
HG	26726000	195.80	4011097770949	154
HG	26727000	197.90	4011097770932	154
HG	26734000	218.20	4011097731865	153
HG	26790000	750.40	4011097801711	182
HG	26791000	717.70	4011097801704	184
HG	26792000	913.40	4011097801698	184
HG	26793000	674.20	4011097806280	185
HG	26794000	752.40	4011097806297	182
HG	26800400	60.80	4011097744599	58
HG	26801400	60.80	4011097736273	58
HG	26802400	46.40	4011097744582	59

brand	code no.	Euro	EAN	page
HG	26803400	46.40	4011097736266	59
HG	26804400	34.80	4011097744575	59
HG	26805400	34.80	4011097736327	59
HG	26806400	34.80	4011097752037	59
HG	26810400	60.80	4011097750026	58
HG	26811400	60.80	4011097736259	58
HG	26812400	46.40	4011097750033	58
HG	26813400	46.40	4011097736242	58
HG	26814400	34.80	4011097750040	58
HG	26815400	34.80	4011097736235	58
HG	26816400	34.80	4011097752136	58
HG	26823400	34.20	4011097756998	61
HG	26824400	26.20	4011097757100	61
HG	26825400	20.20	4011097757117	61
HG	26826400	34.20	4011097759609	61
HG	26827400	26.20	4011097759616	61
HG	26828400	20.20	4011097759623	61
HG	26829400	20.20	4011097759630	61
HG	26834400	25.50	4059625130841	61
HG	26840180	110.00	4059625241660	164
HG	26842000	1,250.00	4059625241653	164
HG	26842700	1,625.00	4059625241646	164
HG	26843000	330.00	4059625201411	116
HG	26843700	429.00	4059625201404	116
HG	26844000	250.00	4059625201398	418
HG	26844700	325.00	4059625201381	418
HG	26851000	155.00	4059625216095	108
HG	26851700	201.50	4059625216408	108
HG	26852000	153.00	4059625216415	108
HG	26852700	198.90	4059625216422	108
HG	26856000	140.00	4059625216439	108
HG	26856700	182.00	4059625216446	108
HG	26857000	138.00	4059625216453	108
HG	26857700	179.40	4059625216460	108
HG	26858000	330.00	4059625201374	116
HG	26858700	429.00	4059625201367	116
HG	26864000	95.00	4059625189696	56
HG	26864140	142.50	4059625264935	56
HG	26864340	142.50	4059625264911	56
HG	26864670	123.50	4059625264904	56
HG	26864700	123.50	4059625189702	56
HG	26864990	142.50	4059625264928	56
HG	26865000	95.00	4059625198544	56
HG	26865140	142.50	4059625264973	56
HG	26865340	142.50	4059625264959	56
HG	26865670	123.50	4059625264942	56
HG	26865700	123.50	4059625198575	56
HG	26865990	142.50	4059625264966	56
HG	26866000	80.00	4059625213407	56
HG	26866140	120.00	4059625265710	56
HG	26866340	120.00	4059625265673	56
HG	26866670	104.00	4059625264980	56
HG	26866700	104.00	4059625220054	56
HG	26866990	120.00	4059625265703	56
HG	26867000	80.00	4059625220085	56
HG	26867140	120.00	4059625265758	56
HG	26867340	120.00	4059625265734	56
HG	26867670	104.00	4059625265727	56
HG	26867700	104.00	4059625220092	56
HG	26867990	120.00	4059625265741	56
HG	26890140	1,162.00	4059625265970	183
HG	26890340	1,162.00	4059625265956	183
HG	26890670	1,085.00	4059625265932	183
HG	26890700	1,085.00	4059625265949	183
HG	26890990	1,162.00	4059625265963	183
HG	26891140	1,165.00	4059625266021	183
HG	26891340	1,165.00	4059625266007	183
HG	26891670	1,088.00	4059625265987	183
HG	26891700	1,088.00	4059625265994	183
HG	26891990	1,165.00	4059625266014	183
27				
HG	27008000	2,449.90	4011097691886	200
HG	27008400	2,449.90	4011097662251	200
HG	27013400	266.70	4011097745152	98
HG	27014400	272.40	4011097745169	98
HG	27028400	3,166.60	4011097771106	166
HG	27029400	3,618.90	4011097771120	165
HG	27030400	224.00	4011097756233	100
HG	27031400	229.70	4011097756240	100
HG	27032000	307.10	4011097679655	99
HG	27033000	313.70	4011097679662	98
HG	27034000	301.80	4011097679679	99
HG	27035000	308.40	4011097679686	98
HG	27036000	508.50	4011097679303	97
HG	27036400	508.50	4011097691824	97
HG	27037000	515.80	4011097679310	97
HG	27037400	515.80	4011097691831	97
HG	27038000	462.40	4011097727936	96
HG	27038400	462.40	4011097727943	96
HG	27039000	469.60	4011097727950	96
HG	27039400	469.60	4011097727967	96
HG	27081400	266.70	4011097755243	97
HG	27082400	272.40	4011097755250	97
HG	27085000	330.20	4011097537566	99
HG	27086000	308.00	4011097537573	99
HG	27106400	3,618.90	4011097771113	165
HG	27109400	3,166.60	4011097771090	166
HG	27112000	1,346.90	4011097679549	171
HG	27112400	1,346.90	4011097679556	171
HG	27113000	1,467.70	4011097679563	172
HG	27113400	1,467.70	4011097679570	172
HG	27114000	1,029.80	4011097679587	176
HG	27115000	824.00	4011097679594	177
HG	27116000	824.00	4011097690117	177
HG	27117000	1,042.50	4011097690124	178
HG	27126000	1,599.40	4011097716954	168
HG	27126400	1,599.40	4011097716947	168
HG	27127000	1,895.40	4011097716930	167
HG	27127400	1,895.40	4011097716923	167
HG	27129000	994.40	4011097718132	169
HG	27129400	994.40	4011097718125	169
HG	27133000	1,180.80	4011097718118	169
HG	27133400	1,180.80	4011097718101	169
HG	27135000	463.30	4011097690131	192
HG	27154000	453.80	4011097625225	192
HG	27185000	655.10	4011097689692	190
HG	27188000	655.10	4011097690148	190
HG	27222000	615.50	4011097690155	191
HG	27223000	850.70	4011097690162	190
HG	27224000	497.40	4011097690179	191
HG	27247400	325.80	4011097770000	188
HG	27248400	325.80	4011097770024	181
HG	27253400	663.40	4011097745114	186
HG	27254400	663.40	4011097751740	186
HG	27255400	628.40	4011097751733	188
HG	27256400	663.40	4011097751726	179
HG	27257400	663.40	4011097751719	179
HG	27258400	628.40	4011097751702	181

brand	code no.	Euro	EAN	page
HG	27264400	403.50	4011097751290	199
HG	27265400	403.50	4011097751283	199
HG	27266400	380.40	4011097751276	200
HG	27267000	424.10	4011097775944	196
HG	27268000	426.20	4011097775937	196
HG	27269000	391.50	4011097775920	198
HG	27270000	348.00	4011097775913	198
HG	27271000	424.10	4011097775906	193
HG	27281000	426.20	4011097775890	193
HG	27283000	1,599.40	4011097755205	168
HG	27283400	1,599.40	4011097755212	168
HG	27284000	391.50	4011097775883	195
HG	27286000	1,346.90	4011097754246	171
HG	27286400	1,346.90	4011097754253	171
HG	27288000	1,599.40	4011097751245	173
HG	27288400	1,599.40	4011097751238	173
HG	27289000	348.00	4011097775876	195
HG	27294000	790.60	4011097773896	140
HG	27295000	790.60	4011097775500	141
HG	27296000	1,242.90	4011097775517	138
HG	27297000	1,118.50	4011097775524	140
HG	27298000	587.30	4011097801681	194
HG	27320000	587.30	4011097801674	197
HG	27337000	492.70	4011097720609	138
HG	27337400	492.70	4011097720593	138
HG	27351400	837.90	4011097769011	187
HG	27352400	837.90	4011097769028	180
HG	27355000	51.60	4011097815732	105
HG	27356000	57.10	4011097815749	105
HG	27361000	1,317.20	4011097971735	175
HG	27362000	1,317.20	4011097971728	175
HG	27363000	1,538.40	4011097971711	174
HG	27364000	1,538.40	4011097971704	174
HG	27370000	517.40	4011097625126	147
HG	27371000	625.80	4011097625140	147
HG	27375000	522.00	4011097655727	147
HG	27376000	621.70	4011097691435	147
HG	27378000	527.90	4011097720586	138
HG	27378400	527.90	4011097720579	138
HG	27380000	479.30	4011097625119	147
HG	27381000	587.90	4011097625133	146
HG	27383000	483.80	4011097655734	147
HG	27384000	509.40	4011097706870	137
HG	27384400	509.40	4011097706887	137
HG	27385000	545.90	4011097706894	137
HG	27385400	545.90	4011097707303	137
HG	27388000	73.50	4011097783253	159
HG	27389000	73.50	4011097783260	159
HG	27389140	110.60	4059625234471	159
HG	27389340	110.60	4059625234488	159
HG	27389670	103.40	4059625234495	159
HG	27389700	103.40	4059625234464	159
HG	27389990	110.60	4059625234457	159
HG	27390000	1,132.40	4011097619613	141
HG	27390400	1,132.40	4011097619620	141
HG	27393000	54.50	4011097769837	159
HG	27393140	81.90	4059625234518	159
HG	27393340	81.90	4059625234525	159
HG	27393670	76.80	4059625234440	159
HG	27393700	76.80	4059625234501	159
HG	27393990	81.90	4059625234532	159
HG	27405000	614.00	4011097592466	152
HG	27405090	767.50	4011097815701	152
HG	27409000	57.00	4011097476124	158

brand	code no.	Euro	EAN	page
HG	27411000	20.80	4011097112930	158
HG	27412000	57.00	4011097112947	158
HG	27413000	80.50	4011097112978	158
HG	27413140	120.80	4011097819983	158
HG	27413340	120.80	4011097819976	158
HG	27413670	112.70	4059625264034	158
HG	27413700	112.70	4059625264041	158
HG	27413990	120.80	4011097820064	158
HG	27414000	39.60	4011097614083	118
HG	27424000	653.10	4011097592459	151
HG	27424090	816.30	4011097806426	151
HG	27437000	1,221.70	4011097619866	142
HG	27437400	1,221.70	4011097617725	142
HG	27438000	69.40	4011097113128	158
HG	27441000	48.00	4011097537580	154
HG	27443000	75.00	4011097537597	153
HG	27446000	80.50	4011097759746	158
HG	27450000	195.10	4011097587431	153
HG	27452000	82.50	4011097235219	118
HG	27453000	30.20	4011097514383	118
HG	27454000	25.20	4011097113258	117
HG	27454140	37.80	4011097892863	117
HG	27454340	37.80	4011097892825	117
HG	27454670	35.30	4059625266090	117
HG	27454700	35.30	4059625266106	117
HG	27454990	37.80	4011097113425	117
HG	27456000	54.30	4011097526782	118
HG	27458000	48.70	4011097113449	117
HG	27461000	561.50	4011097528205	150
HG	27462000	434.30	4011097528212	151
HG	27463000	521.70	4011097528229	150
HG	27464000	394.60	4011097528236	151
HG	27467000	54.30	4011097759753	159
HG	27468000	453.40	4011097498461	151
HG	27474000	556.80	4011097413693	150
HG	27475000	254.20	4011097226460	157
HG	27476000	429.60	4011097415802	151
HG	27477000	517.10	4011097413709	150
HG	27478000	389.90	4011097415819	151
HG	27479000	54.30	4011097381138	159
HG	27492000	690.80	4011097583556	148
HG	27493000	667.40	4011097563831	148
HG	27494000	630.70	4011097563824	148
HG	27505000	29.00	4011097678733	117
HG	27506000	33.00	4011097678726	118
HG	27521000	17.60	4011097157818	115
HG	27558000	34.40	4011097570228	114
HG	27559000	36.50	4011097570242	114
HG	27568000	51.80	4011097570235	114
HG	27574000	54.10	4011097663968	112
HG	27575000	55.80	4011097663975	112
HG	27576000	29.90	4011097663982	114
HG	27577000	32.80	4011097663999	114
HG	27592000	62.10	4011097537436	111
HG	27593000	86.40	4011097537443	111
HG	27594000	64.50	4011097537450	111
HG	27595000	92.30	4011097537474	111
HG	27607000	399.40	4059625137161	149
HG	27609000	49.60	4011097626871	105
HG	27610000	80.00	4011097537504	105
HG	27611000	71.40	4011097537511	105
HG	27614000	55.20	4011097570167	105
HG	27615000	52.10	4011097570174	105
HG	27617000	160.20	4011097594590	107

brand	code no.	Euro	EAN	page
HG	27617820	240.30	4011097594903	107
HG	27620000	368.60	4059625137178	149
HG	27623000	337.90	4059625137185	150
HG	27630000	710.00	4059625196052	189
HG	27633000	911.40	4059625154892	170
HG	27633140	1,367.00	4059625230978	170
HG	27633340	1,367.00	4059625230985	170
HG	27633670	1,275.90	4059625230992	170
HG	27633700	1,275.90	4059625231005	170
HG	27633990	1,367.00	4059625231012	170
HG	27636000	267.90	4011097587448	102
HG	27640000	295.00	4011097857022	101
HG	27640400	295.00	4011097857015	101
HG	27640600	295.00	4011097961262	101
HG	27645000	400.40	4011097857008	101
HG	27645400	400.40	4011097856995	101
HG	27645600	400.40	4011097961279	101
HG	27646000	453.10	4011097856988	72
HG	27646400	453.10	4011097856971	72
HG	27647000	453.10	4011097856964	72
HG	27647400	453.10	4011097856957	72
HG	27648000	347.80	4011097856940	73
HG	27648400	347.80	4011097856933	73
HG	27649000	347.80	4011097856926	73
HG	27649400	347.80	4011097856919	73
HG	27651000	67.90	4011097607122	96
HG	27652000	64.30	4011097607139	96
HG	27653000	110.80	4011097607146	85
HG	27654000	181.30	4059625154908	70
HG	27655000	137.30	4011097607153	84
HG	27660000	710.00	4059625196045	189
HG	27667000	187.40	4059625154915	70
HG	27668000	119.80	4059625157077	109
HG	27669000	117.80	4059625157084	109
HG	27671000	345.00	4059625214145	66
HG	27672000	345.00	4059625214152	66
HG	27673000	445.00	4059625214169	67
HG	27674000	445.00	4059625214176	67
HG	27687000	875.00	4059625196038	189
HG	27694000	180.00	4059625261309	157
HG	27694140	270.00	4059625266199	157
HG	27694340	270.00	4059625266175	157
HG	27694670	252.00	4059625266168	157
HG	27694700	252.00	4059625261316	157
HG	27694990	270.00	4059625266182	157
HG	27704000	67.60	4011097710495	104
HG	27717000	85.10	4011097664828	87
HG	27724000	92.40	4011097664835	86
HG	27728000	55.80	4011097664859	95
HG	27729000	58.80	4011097664866	95
HG	27742000	85.10	4011097704142	87
HG	27762000	60.00	4011097570181	94
HG	27763000	56.50	4011097570198	94
HG	27764000	62.50	4011097610221	95
HG	27766000	74.20	4011097570204	94
HG	27767000	70.90	4011097570211	94
HG	27771000	106.40	4011097537290	85
HG	27772000	98.10	4011097537405	86
HG	27774000	132.90	4011097537412	84
HG	27775000	124.80	4011097537429	85
HG	27776000	107.30	4011097537528	86
HG	27791000	184.60	4011097594743	87
HG	27802000	217.00	4011097679600	69
HG	27802400	217.00	4011097679617	69
HG	27803000	223.90	4011097679624	69
HG	27803400	223.90	4011097679631	69
HG	27812400	201.10	4011097803265	219
HG	27813400	209.90	4011097803272	100
HG	27841000	279.60	4011097609980	84
HG	27841090	349.50	4011097815572	84
HG	27843000	272.40	4011097609997	84
HG	27843090	340.60	4011097815589	84
HG	27844000	271.80	4011097619637	101
HG	27853000	409.90	4011097622217	83
HG	27853400	409.90	4011097617718	83
HG	27856000	218.00	4011097720029	67
HG	27856400	218.00	4011097720012	67
HG	27857000	225.20	4011097720005	67
HG	27857400	225.20	4011097719894	67
HG	27999000	200.90	4011097662268	200
28				
HG	28010000	290.00	4059625203026	431
HG	28010140	435.00	4059625241639	431
HG	28010340	435.00	4059625241622	431
HG	28010670	406.00	4059625241615	431
HG	28010700	406.00	4059625241608	431
HG	28010990	435.00	4059625241592	431
HG	28016000	60.00	4059625206676	432
HG	28020000	290.00	4059625203002	432
HG	28021000	150.00	4059625206690	433
HG	28071000	26.10	4011097115498	542
HG	28072000	4.00	4011097436920	123
HG	28132000	35.50	4011097557854	122
HG	28134000	39.00	4011097557861	122
HG	28136000	37.10	4011097557847	122
HG	28167000	16.10	4011097796055	122
HG	28168000	16.80	4011097796062	122
HG	28169000	21.10	4011097796079	122
HG	28248000	45.00	4059625024799	122
HG	28249000	43.00	4059625024782	122
HG	28262000	12.70	4011097314044	122
HG	28264000	18.10	4011097314051	122
HG	28266000	13.50	4011097260860	122
HG	28272000	23.10	4011097314013	122
HG	28272450	29.00	4011097327099	122
HG	28274000	26.60	4011097314020	122
HG	28276000	25.00	4011097314037	536
HG	28276030	41.50	4011097667164	536
HG	28276060	41.50	4011097667171	536
HG	28276090	51.10	4011097327143	536
HG	28276140	37.50	4011097839677	536
HG	28276340	37.50	4011097839639	536
HG	28276430	41.50	4011097667195	536
HG	28276450	31.30	4011097327150	536
HG	28276460	41.50	4011097667201	536
HG	28276480	41.50	4011097667218	536
HG	28276610	41.50	4011097667225	536
HG	28276650	51.10	4011097667232	536
HG	28276670	35.00	4059625231029	536
HG	28276680	62.40	4011097327167	536
HG	28276700	35.00	4059625231036	536
HG	28276800	37.50	4011097411804	536
HG	28276810	41.50	4011097411828	536
HG	28276880	41.50	4011097327181	536
HG	28276990	37.50	4011097839950	536
HG	28307000	99.10	4011097280011	553
HG	28321000	19.60	4011097116587	115
HG	28324000	27.30	4011097594958	116

brand	code no.	Euro	EAN	page
HG	28328000	33.90	4011097734514	116
HG	28331000	23.40	4011097487311	115
HG	28331800	35.00	4011097487335	115
HG	28335000	33.90	4011097734293	116
HG	28346000	22.90	4011097116969	415
HG	28387000	45.00	4059625214121	115
HG	28387140	68.00	4059625231043	115
HG	28387340	68.00	4059625231050	115
HG	28387670	63.00	4059625231067	115
HG	28387700	63.00	4059625231074	115
HG	28387990	68.00	4059625231081	115
HG	28389000	41.50	4011097254418	554
HG	28412180	114.20	4011097502809	143
HG	28414180	118.40	4011097591766	142
HG	28417000	4,057.50	4011097591742	142
HG	28418000	4,838.60	4011097591759	142
HG	28423000	42.00	4011097570136	156
HG	28424000	42.50	4011097570143	156
HG	28425000	52.80	4011097570150	156
HG	28430000	138.60	4011097610948	160
HG	28430400	138.60	4011097615936	160
HG	28433000	1,295.60	4011097660936	144
HG	28433400	1,295.60	4011097681542	144
HG	28462000	54.90	4011097607184	154
HG	28466000	97.80	4011097192437	160
HG	28467000	113.30	4011097235264	160
HG	28496000	196.90	4011097141909	157
HG	28535000	35.10	4011097537306	60
HG	28536000	62.40	4011097537016	60
HG	28536330	90.50	4011097681177	536
HG	28536430	90.50	4011097681160	536
HG	28536450	90.50	4011097681153	536
HG	28536460	90.50	4011097681146	536
HG	28536480	90.50	4011097681139	536
HG	28536610	90.50	4011097681115	536
HG	28536710	90.50	4011097681122	536
HG	28536810	90.50	4011097706634	536
HG	28536880	90.50	4011097706641	536
HG	28537000	39.90	4011097537269	60
HG	28538000	66.90	4011097537276	60
HG	28539000	76.10	4011097591469	61
HG	28548000	146.80	4011097610023	60
HG	28548090	183.60	4011097806433	60
HG	28557000	163.00	4011097617701	59
HG	28557400	163.00	4011097618197	59
HG	28558000	102.60	4011097625102	59
HG	28558400	102.60	4011097617688	59
HG	28561000	27.30	4011097570105	415
HG	28562000	21.10	4011097570112	62
HG	28563000	37.10	4011097570129	62
HG	28567000	167.40	4011097641812	59
HG	28567400	167.40	4011097641829	59
HG	28568000	107.40	4011097641836	59
HG	28568400	107.40	4011097641843	59
HG	28580000	28.60	4011097664804	60
HG	28583000	33.50	4011097664811	60
HG	28585000	17.30	4011097664842	63
HG	28587000	109.10	4011097679327	57
HG	28587400	109.10	4011097679334	57
HG	28588000	109.10	4011097679341	57
HG	28588400	109.10	4011097679358	57
HG	28631000	120.60	4011097487175	104
HG	28631140	181.30	4059625231098	104
HG	28631340	181.30	4059625229606	104
HG	28631670	169.00	4059625231104	104
HG	28631700	169.00	4059625231111	104
HG	28631820	180.90	4011097499574	104
HG	28631990	181.30	4059625231128	104
HG	28632000	112.60	4011097487199	104
HG	28632140	169.00	4059625231135	104
HG	28632340	169.00	4059625231142	104
HG	28632670	157.70	4059625231159	104
HG	28632700	157.70	4059625231166	104
HG	28632990	169.00	4059625231173	104
HG	28650000	16.30	4011097118789	536
HG	28662000	111.40	4011097723709	104
HG	28663000	117.40	4011097723716	104
HG	28672000	26.10	4011097118833	536
HG	28672450	51.10	4011097118857	536
HG	28672880	41.50	4011097151076	536
HG	28675000	26.10	4011097118901	538
HG	28678000	14.50	4011097537283	107
HG	28679000	35.60	4011097487557	108
HG	28684000	14.50	4011097205588	538
HG	28685000	26.10	4011097118970	538
HG	28694000	32.30	4011097591735	102
HG	28698000	72.80	4011097413686	537
31				
HG	31015000	241.70	4059625130889	316
HG	31016000	253.30	4059625130872	316
HG	31022000	340.50	4011097576602	317
HG	31023000	328.50	4011097646084	317
HG	31060000	260.70	4011097484006	316
HG	31063000	251.20	4011097719344	404
HG	31068000	248.60	4011097540566	316
HG	31074000	334.10	4011097660950	305
HG	31080000	230.00	4011097660967	305
HG	31081000	297.80	4011097660974	306
HG	31082000	311.10	4011097660981	307
HG	31084000	223.30	4011097661001	305
HG	31085000	291.00	4011097661018	307
HG	31086000	318.00	4011097661025	307
HG	31087000	304.50	4011097651231	306
HG	31088000	216.70	4011097661032	305
HG	31091000	41.50	4011097205564	547
HG	31100000	680.50	4011097519210	318
HG	31101000	627.60	4011097519227	318
HG	31102000	721.40	4011097519234	318
HG	31103000	667.00	4011097519241	318
HG	31121000	234.10	4011097691527	306
HG	31130000	97.10	4011097679396	356
HG	31131000	123.30	4011097692425	356
HG	31132000	168.40	4011097678030	355
HG	31159000	320.30	4011097677903	316
HG	31160000	289.50	4011097497419	316
HG	31161000	320.30	4011097641850	316
HG	31162000	323.40	4011097641867	317
HG	31163000	351.60	4011097641874	317
HG	31166000	203.20	4011097661049	308
HG	31171000	472.70	4011097679112	360
HG	31172000	429.00	4011097679129	360
HG	31173000	494.70	4011097679136	360
HG	31174000	473.30	4011097679143	360
HG	31183000	284.40	4011097661056	306
HG	31184000	304.30	4011097692319	307
HG	31185000	277.40	4011097705149	306
HG	31186000	209.70	4011097710402	305
HG	31187000	304.50	4011097674056	306

brand	code no.	Euro	EAN	page
HG	31190000	717.90	4011097661063	311
HG	31203000	234.10	4011097719337	404
HG	31204000	228.50	4011097719320	305
HG	31251000	280.40	4011097718590	307
HG	31261000	260.70	4011097484013	318
HG	31280000	268.10	4011097661070	308
HG	31285000	287.10	4011097661094	305
HG	31300000	348.00	4011097801667	296
HG	31300090	435.00	4011097801643	296
HG	31301000	348.00	4011097801629	296
HG	31301090	435.00	4011097801612	296
HG	31302000	369.80	4011097801605	296
HG	31302090	462.10	4011097801582	296
HG	31303000	435.00	4011097801568	296
HG	31303090	543.70	4011097801544	296
HG	31306000	522.00	4011097802329	297
HG	31306090	652.50	4011097802305	297
HG	31307000	543.70	4011097802282	297
HG	31307090	679.60	4011097802268	297
HG	31315000	603.60	4011097813400	299
HG	31315090	761.20	4011097813417	299
HG	31320000	380.60	4011097801520	297
HG	31320090	478.50	4011097801513	297
HG	31330000	478.50	4011097802244	296
HG	31330090	598.10	4011097802220	296
HG	31331000	500.20	4011097802206	297
HG	31331090	625.30	4011097802183	297
HG	31340000	456.70	4011097801506	298
HG	31340090	570.90	4011097801490	298
HG	31345000	309.90	4011097801483	299
HG	31345090	391.50	4011097801476	299
HG	31360000	348.00	4011097801469	300
HG	31360090	435.00	4011097801452	300
HG	31365000	277.30	4011097801445	301
HG	31365090	348.00	4011097801438	301
HG	31416000	179.10	4011097686486	320
HG	31417000	166.30	4011097686479	320
HG	31422000	360.00	4011097722399	311
HG	31423000	299.10	4011097722702	310
HG	31441000	663.40	4011097812106	300
HG	31441090	831.90	4011097812113	300
HG	31442000	717.90	4011097661100	312
HG	31443000	558.40	4011097645735	321
HG	31445000	1,794.30	4011097809656	298
HG	31445090	2,283.60	4011097809632	298
HG	31446000	713.30	4011097641126	320
HG	31447000	713.30	4011097712246	320
HG	31449000	724.20	4011097813424	300
HG	31449090	908.00	4011097813431	300
HG	31451000	324.80	4011097748450	309
HG	31454000	209.70	4011097748443	309
HG	31456000	196.20	4011097748467	312
HG	31460000	340.00	4011097484020	319
HG	31465000	234.00	4011097488547	319
HG	31466000	371.70	4011097488554	319
HG	31471000	1,583.30	4011097760667	308
HG	31480000	299.10	4011097656687	309
HG	31484000	108.20	4011097661117	310
HG	31487000	324.80	4011097661124	309
HG	31493000	209.70	4011097661131	309
HG	31494000	200.90	4011097661148	310
HG	31509000	123.00	4011097755847	357
HG	31513000	118.60	4011097719313	357
HG	31515000	296.80	4011097699356	386
HG	31517000	123.00	4011097679402	357
HG	31518000	149.00	4011097679419	358
HG	31519000	181.40	4011097679426	359
HG	31521000	297.60	4011097722900	363
HG	31523000	250.70	4011097722917	363
HG	31531000	184.90	4011097795201	359
HG	31532000	179.60	4011097795218	359
HG	31539000	105.30	4011097734026	356
HG	31603000	124.70	4011097719306	406
HG	31604000	105.30	4011097706160	355
HG	31607000	129.50	4011097679433	357
HG	31608000	155.40	4011097679440	358
HG	31609000	187.80	4011097679457	359
HG	31621000	129.50	4011097691510	357
HG	31629000	126.50	4011097658223	361
HG	31652000	196.20	4011097708584	313
HG	31657000	129.50	4011097696089	357
HG	31658000	155.40	4011097696096	358
HG	31660000	260.70	4011097484037	321
HG	31665000	212.10	4011097488585	322
HG	31677000	36.70	4011097665290	241
HG	31680000	253.10	4011097656694	312
HG	31685000	196.20	4011097661155	313
HG	31686000	94.80	4011097661162	313
HG	31730000	105.30	4011097590769	355
HG	31732000	98.00	4011097602424	355
HG	31733000	98.00	4011097590783	355
HG	31738000	105.30	4011097646305	355
HG	31741180	118.60	4011097477237	310
HG	31780000	125.60	4011097503264	471
HG	31784000	147.40	4011097605876	471
HG	31791000	32.30	4011097483535	548
HG	31793000	32.30	4011097506005	548
HG	31803000	277.40	4011097641881	470
HG	31804000	134.80	4011097641898	470
HG	31806000	119.50	4011097641904	470
HG	31806800	155.30	4011097654829	470
HG	31815000	251.70	4011097718187	468
HG	31815670	352.30	4059625231180	468
HG	31815800	327.40	4011097718309	468
HG	31816000	123.30	4011097646312	470
HG	31817000	194.20	4011097718194	469
HG	31817670	271.40	4059625231197	469
HG	31817800	252.90	4011097726717	469
HG	31820000	169.40	4011097679464	469
HG	31820670	237.60	4059625231203	469
HG	31820800	220.90	4011097679471	469
HG	31821000	169.40	4059625196700	469
HG	31821800	220.90	4059625197974	469
HG	31822000	187.00	4011097679488	469
HG	31823000	277.50	4011097708027	470
HG	31825000	161.20	4011097708041	470
HG	31826000	119.50	4059625196694	470
HG	31827000	194.20	4059625196786	469
HG	31833000	251.70	4059625196717	468
HG	31910000	115.60	4011097725819	356
HG	31911000	141.90	4011097725833	408
HG	31913000	147.70	4011097725864	408
HG	31914000	109.70	4011097757421	356
HG	31915000	135.50	4011097757438	408
HG	31916000	119.10	4011097725857	409
HG	31917000	135.50	4011097757445	402
HG	31920000	105.30	4011097591506	360
HG	31922000	105.30	4011097706177	360

brand	code no.	Euro	EAN	page
HG	31923000	134.50	4011097766072	359
HG	31926000	122.80	4011097646688	355
HG	31927000	147.70	4011097728544	358
HG	31928000	105.30	4011097646329	361
HG	31930000	136.80	4011097629889	363
HG	31931000	127.70	4011097629896	363
HG	31936000	359.80	4011097689722	364
HG	31937000	246.60	4011097689739	359
HG	31938000	136.80	4011097646336	363
HG	31940000	129.50	4011097591520	361
HG	31945000	131.20	4011097602523	361
HG	31946000	200.60	4011097602547	361
HG	31947000	48.00	4011097602561	362
HG	31948000	129.50	4011097646343	361
HG	31951000	101.50	4011097719290	406
HG	31952000	94.40	4011097719283	355
HG	31960000	108.50	4011097591544	364
HG	31961000	40.90	4059625194195	365
HG	31964000	123.30	4011097708560	365
HG	31965000	123.30	4011097602615	365
HG	31967000	40.90	4011097602653	366
HG	31968000	108.50	4011097646350	364
HG	31971000	104.00	4011097641539	258
HG	31991000	41.50	4011097386836	547
32				
HG	32020000	197.60	4011097397382	349
HG	32031000	189.20	4011097397399	349
HG	32032000	256.30	4011097399287	349
HG	32070000	295.70	4011097473574	349
HG	32092000	41.50	4011097424101	547
HG	32095000	41.50	4011097494470	547
HG	32122000	47.90	4011097722818	63
HG	32127000	45.40	4011097722801	63
HG	32128000	81.40	4011097412863	63
HG	32129000	79.80	4011097617909	63
HG	32420000	250.20	4011097397894	349
HG	32475000	170.30	4011097397962	350
HG	32477000	303.30	4011097399430	350
HG	32500000	247.60	4011097812786	277
HG	32500140	371.70	4059625229286	277
HG	32500340	371.70	4059625229293	277
HG	32500670	347.10	4059625231210	277
HG	32500700	347.10	4059625231227	277
HG	32500990	371.70	4059625229309	277
HG	32501000	231.80	4011097812762	278
HG	32502000	252.90	4011097812755	276
HG	32503000	258.20	4011097812724	277
HG	32506000	263.50	4011097812687	275
HG	32507000	268.70	4011097812649	275
HG	32507140	403.50	4059625229316	275
HG	32507340	403.50	4059625229330	275
HG	32507670	375.80	4059625212455	275
HG	32507700	375.80	4059625212462	275
HG	32507990	403.50	4059625229347	275
HG	32508000	273.90	4011097812625	275
HG	32511000	368.80	4011097812588	278
HG	32511140	553.00	4059625222539	278
HG	32511340	553.00	4059625222546	278
HG	32511670	516.10	4059625231234	278
HG	32511700	516.10	4059625231241	278
HG	32511990	553.00	4059625222553	278
HG	32512000	379.30	4011097812540	279
HG	32512140	569.30	4059625229354	279
HG	32512340	569.30	4059625229378	279
HG	32512670	531.50	4059625231500	279
HG	32512700	531.50	4059625231517	279
HG	32512990	569.30	4059625229385	279
HG	32514000	353.00	4011097810973	280
HG	32515000	368.80	4011097835297	280
HG	32515140	553.00	4059625229392	280
HG	32515340	553.00	4059625229408	280
HG	32515670	516.10	4059625231524	280
HG	32515700	516.10	4059625231531	280
HG	32515990	553.00	4059625229415	280
HG	32520000	347.80	4011097812472	283
HG	32520140	521.20	4059625229446	283
HG	32520340	521.20	4059625229453	283
HG	32520670	486.40	4059625231548	283
HG	32520700	486.40	4059625231555	283
HG	32520990	521.20	4059625229460	283
HG	32522000	353.00	4011097812441	283
HG	32525000	316.10	4011097835280	281
HG	32526000	337.20	4011097835273	281
HG	32526140	505.90	4059625229422	281
HG	32526340	505.90	4059625204672	281
HG	32526670	472.10	4059625231562	281
HG	32526700	472.10	4059625231579	281
HG	32526990	505.90	4059625229439	281
HG	32530000	1,106.40	4011097835266	282
HG	32531000	843.00	4011097835259	287
HG	32532000	1,633.30	4011097835242	284
HG	32532140	2,450.40	4059625229491	284
HG	32532340	2,450.40	4059625229507	284
HG	32532670	2,286.60	4059625231586	284
HG	32532700	2,286.60	4059625231593	284
HG	32532990	2,450.40	4059625229514	284
HG	32540000	326.70	4011097812410	285
HG	32540140	490.50	4059625231708	285
HG	32540340	490.50	4059625229477	285
HG	32540670	457.70	4059625231715	285
HG	32540700	457.70	4059625231722	285
HG	32540990	490.50	4059625231739	285
HG	32542000	210.70	4059625007266	287
HG	32543000	316.10	4011097835235	288
HG	32543140	474.10	4059625231746	288
HG	32543340	474.10	4059625231753	288
HG	32543670	442.40	4059625231760	288
HG	32543700	442.40	4059625231777	288
HG	32543990	474.10	4059625231784	288
HG	32545000	221.30	4011097826097	286
HG	32545140	331.80	4059625231791	286
HG	32545340	331.80	4059625229484	286
HG	32545670	310.30	4059625231807	286
HG	32545700	310.30	4059625231814	286
HG	32545990	331.80	4059625231821	286
HG	32546000	316.10	4011097826073	286
HG	32546140	474.10	4059625231838	286
HG	32546340	474.10	4059625231845	286
HG	32546670	442.40	4059625231852	286
HG	32546700	442.40	4059625231869	286
HG	32546990	474.10	4059625231876	286
HG	32548000	263.50	4011097835228	288
HG	32550000	632.20	4011097835211	289
HG	32551000	474.20	4011097835204	290
HG	32552000	632.20	4011097835198	291
HG	32553000	474.20	4011097835181	292
HG	32560000	221.30	4011097812373	293
HG	32560140	331.80	4059625241585	293

brand	code no.	Euro	EAN	page
HG	32560340	331.80	4059625241578	293
HG	32560670	309.30	4059625241561	293
HG	32560700	309.30	4059625241554	293
HG	32560990	331.80	4059625241547	293
HG	32565000	205.50	4011097826066	293
HG	32565140	308.20	4059625231883	293
HG	32565340	308.20	4059625231890	293
HG	32565670	287.70	4059625231906	293
HG	32565700	287.70	4059625231913	293
HG	32565990	308.20	4059625231920	293
HG	32570000	295.00	4011097812335	276
HG	32571000	305.60	4011097812304	275
HG	32572000	421.50	4011097812274	279
HG	32620000	200.00	4011097399423	351
HG	32675000	158.70	4011097398006	351
HG	32841000	327.50	4011097521565	462
HG	32842000	349.10	4011097523071	462
HG	32845000	327.50	4059625195956	462
HG	32851000	233.90	4011097521558	463
HG	32857000	233.90	4059625195987	463
33				
HG	33091000	41.50	4011097236018	547
HG	33891000	41.50	4011097362304	547
35				
AX	35891800	117.40	4011097238678	548
AX	35893800	181.00	4011097363301	550
36				
AX	36391000	72.70	4011097233413	549
AX	36991000	41.50	4011097233338	549
40				
HG	40068000	16.30	4011097218939	420
HG	40088000	16.30	4011097120461	420
HG	40089000	51.10	4011097147208	420
HG	40418000	100.50	4011097191669	531
HG	40418800	150.70	4011097304342	531
HG	40438000	56.30	4059625131589	531
HG	40438800	73.20	4059625131596	531
HG	40448000	76.80	4059625131602	531
HG	40448800	99.80	4059625131619	531
HG	40468000	76.80	4059625131626	531
HG	40468800	99.80	4059625131633	531
HG	40511000	17.00	4011097584805	418
HG	40511820	25.50	4011097585246	418
HG	40512000	84.60	4011097584584	418
HG	40512820	126.90	4011097585284	418
HG	40513000	84.60	4011097584812	419
HG	40513820	126.90	4011097585222	419
HG	40514000	112.80	4011097584829	418
HG	40514820	169.20	4011097585314	418
HG	40515000	70.80	4011097584843	418
HG	40515820	106.20	4011097585291	418
HG	40516000	98.80	4011097584591	419
HG	40516820	148.20	4011097585239	419
HG	40517000	56.50	4011097584836	419
HG	40517820	84.80	4011097585338	419
HG	40518000	70.80	4011097584881	418
HG	40518820	106.20	4011097585307	418
HG	40522000	126.90	4011097584850	419
HG	40522820	190.40	4011097585321	419
HG	40523000	70.80	4011097584874	419
HG	40523820	106.20	4011097585253	419
HG	40526000	56.50	4011097585260	419
HG	40526820	84.80	4011097585277	419
HG	40950000	7.90	4059625023792	529
HG	40951000	7.90	4059625023808	529
HG	40952800	11.60	4059625027134	529
HG	40953800	16.90	4059625027141	529
HG	40960000	122.90	4059625175194	532
HG	40961000	92.20	4059625175200	532
HG	40962800	80.00	4059625189276	532
HG	40963000	20.00	4059625189269	532
HG	40964000	14.00	4059625189252	532
HG	40965000	23.00	4059625189245	533
HG	40966000	4.50	4059625189238	533
41				
HG	41501000	18.00	4011097618425	267
HG	41502000	98.80	4011097618418	267
HG	41503000	135.40	4011097618289	267
HG	41504000	100.30	4011097618272	267
HG	41505000	161.90	4011097618432	268
HG	41506000	135.40	4011097618401	268
HG	41508000	126.50	4011097618258	268
HG	41512000	117.80	4011097618265	268
HG	41513000	117.80	4011097618296	268
HG	41518000	98.80	4011097618241	268
HG	41710000	25.60	4059625123140	421
HG	41711000	7.70	4059625123089	422
HG	41712000	51.20	4059625123010	422
HG	41713000	41.00	4059625123102	421
HG	41714000	35.80	4059625123133	421
HG	41715000	25.60	4059625123058	421
HG	41716000	41.00	4059625123003	421
HG	41717000	25.60	4059625123126	423
HG	41718000	25.60	4059625123041	421
HG	41720000	71.70	4059625123027	422
HG	41722000	35.80	4059625123034	423
HG	41723000	35.80	4059625123119	422
HG	41724000	25.60	4059625123065	422
HG	41725000	15.40	4059625123096	422
HG	41726000	25.60	4059625123072	423
HG	41727000	112.60	4059625131374	424
HG	41728000	184.30	4059625131381	423
43				
HG	43201000	1,053.70	4059625006887	488
HG	43201800	1,211.80	4059625025413	488
HG	43202000	1,138.00	4059625007006	491
HG	43202800	1,296.10	4059625025505	491
HG	43203000	1,580.50	4059625007020	493
HG	43203800	1,738.70	4059625025499	493
HG	43205000	1,331.20	4059625006894	489
HG	43205800	1,484.80	4059625025482	489
HG	43206000	1,475.20	4059625007013	492
HG	43206800	1,633.30	4059625025475	492
HG	43207000	1,138.00	4059625007037	482
HG	43207800	1,302.30	4059625025468	482
HG	43208000	1,372.20	4059625007044	483
HG	43208800	1,531.90	4059625025451	483
HG	43209000	1,232.80	4059625007051	485
HG	43209800	1,409.80	4059625025444	485
HG	43210000	1,580.50	4059625007068	486
HG	43210800	1,757.60	4059625025437	486
HG	43211000	1,685.90	4059625007075	487
HG	43211800	1,863.00	4059625025420	487
HG	43212000	819.20	4059625100554	494
HG	43213000	921.60	4059625100547	497
HG	43214000	972.80	4059625100530	495
HG	43215000	942.10	4059625100523	498
HG	43216000	1,003.50	4059625100516	499

brand	code no.	Euro	EAN	page
HG	43217000	788.50	4059625100509	500
HG	43218000	860.20	4059625100493	501
HG	43219000	942.10	4059625100486	500
HG	43220000	880.60	4059625100479	502
HG	43221000	942.10	4059625100462	502
HG	43227000	972.80	4059625173596	496
HG	43228000	942.10	4059625173589	501
HG	43229000	1,372.20	4059625177815	484
HG	43229800	1,531.90	4059625177822	484
HG	43230000	1,331.20	4059625177839	490
HG	43230800	1,484.80	4059625177846	490
HG	43301800	611.10	4059625007082	508
HG	43302800	663.90	4059625007129	510
HG	43303800	1,138.00	4059625007167	511
HG	43305800	611.10	4059625007099	508
HG	43306800	870.40	4059625007105	508
HG	43307800	870.40	4059625007112	509
HG	43308800	663.90	4059625007136	510
HG	43309800	1,032.60	4059625007143	510
HG	43310800	1,032.60	4059625007150	511
HG	43311800	1,138.00	4059625007174	511
HG	43312170	288.80	4059625104781	514
HG	43312290	288.80	4059625104774	514
HG	43312380	288.80	4059625104767	514
HG	43313170	368.60	4059625104750	516
HG	43313290	368.60	4059625104743	516
HG	43313380	368.60	4059625104736	516
HG	43314170	448.50	4059625104729	515
HG	43314290	448.50	4059625104712	515
HG	43314380	448.50	4059625104705	515
HG	43315170	368.60	4059625104699	516
HG	43315290	368.60	4059625104682	516
HG	43315380	368.60	4059625104941	516
HG	43316170	430.10	4059625104934	516
HG	43316290	430.10	4059625104927	516
HG	43316380	430.10	4059625104910	516
HG	43330170	448.50	4059625173572	515
HG	43330290	448.50	4059625173565	515
HG	43330380	448.50	4059625173558	515
HG	43331800	870.40	4059625177792	509
HG	43332800	870.40	4059625177808	509
HG	43333000	21.10	4059625024003	530
HG	43334800	240.00	4059625217511	513
HG	43335800	250.00	4059625217504	514
HG	43336800	260.00	4059625217498	514
HG	43337800	340.00	4059625217481	512
HG	43338800	360.00	4059625217474	512
HG	43339800	410.00	4059625217467	513
HG	43340800	320.00	4059625217450	512
HG	43341800	340.00	4059625217443	512
HG	43342800	390.00	4059625217436	513
HG	43425800	421.50	4059625007181	522
HG	43426800	453.10	4059625007198	522
HG	43427800	474.20	4059625007204	523
HG	43428800	495.20	4059625007211	523
HG	43429800	832.40	4059625007228	524
HG	43430800	906.10	4059625007235	524
HG	43431170	355.30	4059625104903	525
HG	43431290	355.30	4059625104897	525
HG	43431380	355.30	4059625104880	525
HG	43432170	435.20	4059625104873	525
HG	43432290	435.20	4059625104866	525
HG	43432380	435.20	4059625104859	525
HG	43433170	435.20	4059625104842	525
HG	43433290	435.20	4059625104835	525
HG	43433380	435.20	4059625104828	525
HG	43434170	496.60	4059625104811	526
HG	43434290	496.60	4059625104804	526
HG	43434380	496.60	4059625104798	526
HG	43921800	24.70	4059625248737	527
HG	43922800	41.20	4059625248720	527
HG	43927000	24.60	4059625105009	528
HG	43928000	41.00	4059625104996	528
HG	43931800	43.20	4059625248713	527
HG	43932800	66.90	4059625248706	527
HG	43937000	43.00	4059625104989	528
HG	43938000	66.60	4059625104972	528
HG	43941800	29.80	4059625248690	527
HG	43942800	47.30	4059625248683	527
HG	43947000	29.70	4059625104965	528
HG	43948000	47.10	4059625104958	529
50				
HG	50001000	36.00	4011097146867	436
HG	50100000	56.10	4011097369495	436
HG	50100140	84.20	4011097820125	436
HG	50100340	84.20	4011097820101	436
HG	50100670	78.50	4059625266113	436
HG	50100700	78.50	4059625266120	436
HG	50100990	84.20	4011097820286	436
HG	50105000	23.90	4011097716282	436
HG	50107000	55.30	4011097664323	433
52				
HG	52010000	33.00	4011097123349	438
HG	52053000	23.50	4011097123431	438
HG	52100000	130.80	4011097346199	436
HG	52105000	73.40	4011097440804	437
HG	52105140	110.00	4059625001400	437
HG	52105340	110.00	4059625001370	437
HG	52105670	103.00	4059625240182	437
HG	52105700	103.00	4059625240199	437
HG	52105990	110.00	4059625001707	437
HG	52120000	187.30	4011097369563	436
53				
HG	53002000	18.20	4011097123912	438
HG	53010000	23.80	4011097123936	438
HG	53428000	12.20	4011097124070	439
HG	53493000	21.80	4011097124193	439
HG	53555000	22.30	4011097124308	439
HG	53646000	47.50	4011097124384	439
HG	53971000	2.30	4011097124872	553
HG	53985000	2.30	4011097124988	553
HG	53990000	20.80	4011097125008	439
55				
HG	55213000	30.30	4011097125121	438
HG	55237000	24.20	4011097125138	439
56				
HG	56373000	12.40	4011097125282	435
58				
HG	58112000	82.20	4011097651804	428
HG	58113000	237.80	4011097423913	431
HG	58115180	108.10	4011097433103	430
HG	58116180	151.60	4011097433110	430
HG	58117000	156.90	4011097417479	428
HG	58117140	235.00	4059625003732	428
HG	58117340	235.00	4059625002599	428
HG	58117670	220.00	4059625235683	428
HG	58117700	220.00	4059625235676	428
HG	58117820	235.40	4011097516615	428

brand	code no.	Euro	EAN	page
HG	58117990	235.00	4059625004050	428
HG	58123000	264.20	4011097363363	429
HG	58125180	117.70	4011097140223	429
HG	58126180	165.00	4011097140230	429
HG	58127000	170.80	4011097140247	428
HG	58128000	202.60	4011097140353	428
HG	58140180	47.10	4011097233543	434
HG	58141180	72.70	4011097233574	434
HG	58142000	67.00	4011097233598	434
HG	58143000	67.00	4011097232874	434
HG	58150000	79.00	4011097492650	435
HG	58185000	21.20	4011097233581	433
HG	58185140	32.00	4059625243985	433
HG	58185340	32.00	4059625243992	433
HG	58185670	30.00	4059625244203	433
HG	58185700	30.00	4059625244210	433
HG	58185990	32.00	4059625178706	433
HG	58186000	32.50	4011097440347	433
HG	58186820	48.80	4011097533346	433
HG	58192000	104.50	4011097412955	431
60				
HG	60056000	55.70	4011097609751	435
HG	60060000	31.30	4011097245270	435
HG	60067000	68.10	4011097557694	435
71				
HG	71020000	92.20	4059625009048	370
HG	71021000	85.00	4059625009031	370
HG	71022000	92.20	4059625009024	370
HG	71024000	92.20	4059625009017	406
HG	71026000	90.00	4059625009000	370
HG	71030000	112.60	4059625008997	369
HG	71031000	105.50	4059625008980	369
HG	71032000	112.60	4059625008973	369
HG	71034000	112.60	4059625008966	406
HG	71036000	180.20	4059625034200	369
HG	71037000	112.60	4059625008959	369
HG	71040000	123.90	4059625008577	373
HG	71041000	130.10	4059625008942	373
HG	71042000	123.90	4059625008935	373
HG	71043000	235.50	4059625034194	375
HG	71044000	276.50	4059625034187	375
HG	71045000	117.80	4059625034170	374
HG	71046000	183.30	4059625034163	374
HG	71047000	44.00	4059625034156	374
HG	71050000	76.80	4059625008614	369
HG	71060000	97.30	4059625008591	376
HG	71061000	107.50	4059625008928	376
HG	71062000	97.30	4059625008911	376
HG	71063000	35.80	4059625194171	377
HG	71065000	107.50	4059625034149	377
HG	71066000	107.50	4059625034132	377
HG	71067000	35.80	4059625034125	377
HG	71068000	122.90	4059625034118	378
HG	71070000	76.60	4011097738710	381
HG	71071000	71.10	4011097738703	381
HG	71072000	76.60	4011097738697	381
HG	71073000	71.10	4011097738680	381
HG	71074000	147.70	4011097738673	382
HG	71075000	76.60	4011097738666	381
HG	71076000	71.10	4011097738659	381
HG	71077000	76.60	4011097738642	381
HG	71078000	76.60	4011097753812	407
HG	71090000	125.80	4011097738628	383
HG	71091000	120.30	4011097738611	383

brand	code no.	Euro	EAN	page
HG	71095000	125.80	4011097738604	383
HG	71100000	98.50	4011097738581	382
HG	71101000	93.00	4011097738574	382
HG	71102000	98.50	4011097738567	383
HG	71103000	93.00	4011097738550	383
HG	71104000	98.50	4011097753829	407
HG	71105000	98.50	4011097738543	382
HG	71107000	98.50	4011097738529	382
HG	71120000	65.60	4011097738499	385
HG	71121000	65.60	4011097768236	385
HG	71123000	143.40	4059625008843	371
HG	71124000	137.20	4059625008836	371
HG	71125000	143.40	4059625008829	371
HG	71126000	174.10	4059625008072	371
HG	71127000	153.60	4059625034101	372
HG	71128000	167.90	4059625034095	371
HG	71130000	158.60	4011097738482	384
HG	71131000	153.20	4011097738475	384
HG	71133000	196.90	4011097738468	384
HG	71140000	209.90	4059625008812	371
HG	71142000	102.40	4059625008553	372
HG	71143000	102.40	4059625008805	372
HG	71144000	138.20	4059625034088	373
HG	71145000	138.20	4059625034071	373
HG	71170000	87.20	4011097783475	381
HG	71171000	109.10	4011097783482	382
HG	71200000	103.90	4011097738444	386
HG	71203000	89.50	4059625076873	386
HG	71204000	82.00	4011097753836	386
HG	71220000	147.70	4011097738420	385
HG	71221000	93.00	4011097738413	384
HG	71222000	98.50	4011097738406	384
HG	71225000	109.40	4011097769981	384
HG	71243000	125.80	4011097768243	387
HG	71263000	103.90	4011097768250	391
HG	71280000	120.30	4011097741451	475
HG	71283000	153.20	4059625215531	477
HG	71284000	180.50	4059625215555	477
HG	71285000	153.20	4011097738369	477
HG	71286000	180.50	4011097754024	477
HG	71287000	180.50	4011097754017	477
HG	71290000	120.40	4011097738352	386
HG	71300000	164.10	4011097738345	389
HG	71310000	437.60	4011097738338	390
HG	71311000	107.10	4011097738321	389
HG	71312000	117.00	4011097738314	389
HG	71313000	300.80	4011097738307	390
HG	71314000	300.80	4011097738291	391
HG	71315000	117.00	4011097738284	389
HG	71320000	89.60	4059625034064	375
HG	71321000	122.90	4059625008737	375
HG	71322000	112.60	4059625008720	375
HG	71324000	122.90	4059625008713	375
HG	71333000	317.40	4059625008706	376
HG	71400000	109.40	4011097738260	387
HG	71401000	109.40	4011097738253	387
HG	71402000	149.60	4011097789507	387
HG	71405000	114.90	4011097738246	387
HG	71406000	40.90	4011097738239	388
HG	71407000	180.50	4011097769967	387
HG	71409000	154.50	4059625062463	388
HG	71410000	85.00	4011097738222	333
HG	71430000	114.90	4011097738215	387
HG	71474000	250.00	4011097778563	332

brand	code no.	Euro	EAN	page
HG	71474140	374.80	4059625231982	332
HG	71474340	374.80	4059625229583	332
HG	71474670	350.20	4059625231999	332
HG	71474700	350.20	4059625232002	332
HG	71474990	374.80	4059625232019	332
HG	71600000	87.50	4011097737799	391
HG	71601000	87.50	4011097737782	391
HG	71604000	32.80	4059625194157	392
HG	71605000	98.50	4011097737775	391
HG	71606000	32.80	4011097737768	392
HG	71607000	98.50	4011097754581	392
HG	71629000	115.70	4011097787749	386
HG	71630000	93.00	4011097737751	391
HG	71666000	122.60	4011097769936	393
HG	71700000	107.50	4011097770703	329
HG	71701000	107.50	4011097770697	329
HG	71702000	100.80	4011097770680	329
HG	71703000	107.50	4011097770673	329
HG	71704000	100.80	4011097770666	329
HG	71705000	107.50	4011097770659	405
HG	71706000	95.00	4011097770642	330
HG	71707000	208.10	4011097770772	329
HG	71710000	131.20	4011097770765	328
HG	71710140	196.60	4059625232026	328
HG	71710340	196.60	4059625229521	328
HG	71710670	184.30	4059625232033	328
HG	71710700	184.30	4059625232040	328
HG	71710990	196.60	4059625232057	328
HG	71711000	131.20	4011097770758	328
HG	71712000	124.40	4011097770741	328
HG	71712140	186.60	4059625265789	328
HG	71712340	186.60	4059625147054	328
HG	71712670	174.20	4059625265765	328
HG	71712700	174.20	4059625265772	328
HG	71712990	186.60	4059625035573	328
HG	71713000	131.20	4011097770734	329
HG	71713140	196.60	4059625232064	329
HG	71713340	196.60	4059625232071	329
HG	71713670	184.30	4059625232088	329
HG	71713700	184.30	4059625232095	329
HG	71713990	196.60	4059625232101	329
HG	71714000	124.40	4011097770727	329
HG	71714140	186.60	4059625265833	329
HG	71714340	186.60	4059625265819	329
HG	71714670	174.20	4059625265796	329
HG	71714700	174.20	4059625265802	329
HG	71714990	186.60	4059625265826	329
HG	71715000	131.20	4011097778495	404
HG	71716000	219.40	4011097770710	330
HG	71716140	329.70	4059625232118	330
HG	71716340	329.70	4059625229538	330
HG	71716670	307.20	4059625232125	330
HG	71716700	307.20	4059625232132	330
HG	71716990	329.70	4059625232149	330
HG	71717000	213.80	4011097770826	330
HG	71717140	320.70	4059625265871	330
HG	71717340	320.70	4059625198001	330
HG	71717670	299.30	4059625265840	330
HG	71717700	299.30	4059625265857	330
HG	71717990	320.70	4059625265864	330
HG	71720000	131.20	4011097770819	331
HG	71720140	196.60	4059625250457	331
HG	71720340	196.60	4059625250440	331
HG	71720670	184.30	4059625250433	331

brand	code no.	Euro	EAN	page
HG	71720700	184.30	4059625250426	331
HG	71720990	196.60	4059625250419	331
HG	71721000	131.20	4011097770802	331
HG	71729000	195.70	4011097770796	332
HG	71730000	498.70	4011097782409	334
HG	71731000	356.30	4011097782393	334
HG	71732000	184.30	4011097770789	331
HG	71733000	237.50	4011097770871	331
HG	71733140	356.40	4059625232156	331
HG	71733340	356.40	4059625229545	331
HG	71733670	332.80	4059625232163	331
HG	71733700	332.80	4059625232170	331
HG	71733990	356.40	4059625170472	331
HG	71734000	208.10	4011097778457	331
HG	71734140	312.30	4059625232187	331
HG	71734340	312.30	4059625232194	331
HG	71734670	291.80	4059625232200	331
HG	71734700	291.80	4059625232217	331
HG	71734990	312.30	4059625232224	331
HG	71740000	171.90	4011097770864	332
HG	71740140	258.10	4059625232231	332
HG	71740340	258.10	4059625221754	332
HG	71740670	240.60	4059625232248	332
HG	71740700	240.60	4059625232255	332
HG	71740990	258.10	4059625232262	332
HG	71741000	190.00	4011097770857	332
HG	71745000	142.40	4011097770840	332
HG	71745140	214.00	4059625232279	332
HG	71745340	214.00	4059625232286	332
HG	71745670	199.70	4059625232293	332
HG	71745700	199.70	4059625232309	332
HG	71745990	214.00	4059625232316	332
HG	71746000	65.50	4011097770833	333
HG	71747000	226.20	4011097791395	333
HG	71748000	356.30	4011097788807	335
HG	71748140	534.50	4059625232323	335
HG	71748340	534.50	4059625232330	335
HG	71748670	498.70	4059625232347	335
HG	71748700	498.70	4059625232354	335
HG	71748990	534.50	4059625232361	335
HG	71750000	178.70	4011097782379	328
HG	71751000	171.90	4011097775791	328
HG	71752000	261.20	4011097782416	328
HG	71753000	255.50	4011097775784	328
HG	71754000	202.60	4011097782355	330
HG	71754140	304.10	4059625246429	330
HG	71754340	304.10	4059625246412	330
HG	71754670	283.70	4059625246443	330
HG	71754700	283.70	4059625246450	330
HG	71754990	304.10	4059625246436	330
HG	71755000	195.70	4011097782348	330
HG	71760000	148.20	4011097770918	335
HG	71760140	222.20	4059625232378	335
HG	71760340	222.20	4059625232385	335
HG	71760670	207.90	4059625232392	335
HG	71760700	207.90	4059625232408	335
HG	71760990	222.20	4059625232415	335
HG	71761000	166.30	4011097770901	335
HG	71764000	47.50	4059625194119	336
HG	71765000	118.80	4011097778327	336
HG	71765140	178.20	4059625232422	336
HG	71765340	178.20	4059625147061	336
HG	71765670	165.90	4059625232439	336
HG	71765700	165.90	4059625232446	336

brand	code no.	Euro	EAN	page
HG	71765990	178.20	4059625232453	336
HG	71766000	47.50	4011097770895	336
HG	71768000	118.80	4011097778310	336
HG	71800000	266.20	4059625085127	471
HG	71800800	346.10	4059625085110	471
HG	71801000	235.50	4059625085103	472
HG	71801800	306.20	4059625085097	472
HG	71802000	169.00	4059625085080	472
HG	71802800	219.70	4059625085073	472
HG	71803000	266.20	4059625085066	473
HG	71804000	133.10	4059625085059	473
HG	71805000	122.90	4059625085042	473
HG	71806000	122.90	4059625085035	473
HG	71806800	159.70	4059625085028	473
HG	71807000	153.60	4059625085011	473
HG	71808000	102.40	4059625085004	475
HG	71808800	133.10	4059625084991	475
HG	71809000	102.40	4059625084984	475
HG	71813000	250.90	4059625084939	474
HG	71814000	169.00	4059625098356	474
HG	71814800	219.70	4059625098363	474
HG	71820000	319.50	4059625098370	471
HG	71820800	399.40	4059625098387	471
HG	71821000	288.80	4059625098394	472
HG	71821800	359.40	4059625098400	472
HG	71829000	222.20	4059625098417	474
HG	71829800	272.90	4059625098424	474
HG	71830000	93.50	4011097761268	476
HG	71831000	111.70	4011097766461	476
HG	71832000	106.30	4011097766454	475
HG	71833000	136.20	4011097775487	475
HG	71834000	244.50	4011097766447	476
HG	71835000	137.20	4011097766430	475
HG	71836000	137.20	4011097766423	476
HG	71837000	93.50	4011097766416	476
HG	71839000	106.30	4011097775753	476
HG	71860000	106.30	4059625197103	475
HG	71861000	137.20	4059625196755	475
HG	71862000	235.50	4059625198490	472
HG	71864000	122.90	4059625198513	473
HG	71865000	169.00	4059625198520	474
HG	71866000	102.40	4059625198537	475
HG	71920000	101.40	4059625008676	370
HG	71921000	123.90	4059625008669	409
HG	71923000	141.30	4059625008652	372
HG	71926000	107.50	4059625008645	376
HG	71970000	27.40	4011097737737	241
72				
HG	72010000	131.20	4011097770048	339
HG	72011000	131.20	4011097770116	339
HG	72012000	124.40	4011097770109	339
HG	72013000	131.20	4011097770093	340
HG	72014000	124.40	4011097770086	340
HG	72015000	131.20	4011097770079	405
HG	72017000	118.80	4011097770055	340
HG	72018000	124.40	4011097775715	339
HG	72020000	155.00	4011097770161	339
HG	72021000	148.20	4011097770154	339
HG	72022000	155.00	4011097770147	339
HG	72023000	148.20	4011097770130	339
HG	72024000	155.00	4011097770123	405
HG	72025000	148.20	4011097775708	339
HG	72031000	237.50	4011097770246	340
HG	72032000	231.80	4011097770239	340

brand	code no.	Euro	EAN	page
HG	72040000	178.70	4011097770222	338
HG	72041000	171.90	4011097770215	338
HG	72042000	213.80	4011097770208	338
HG	72043000	208.10	4011097770192	338
HG	72044000	285.00	4011097770185	338
HG	72045000	287.40	4011097770178	338
HG	72105000	261.20	4011097770307	341
HG	72110000	202.60	4011097770291	341
HG	72111000	226.20	4011097770284	341
HG	72113000	416.30	4011097782546	340
HG	72115000	511.20	4011097782522	341
HG	72116000	504.30	4011097782515	341
HG	72200000	155.00	4011097770260	342
HG	72202000	202.60	4011097775494	342
HG	72290000	202.60	4011097770253	342
HG	72291000	250.00	4011097781808	342
HG	72400000	195.70	4011097770383	343
HG	72401000	213.80	4011097770376	343
HG	72405000	160.60	4011097770352	344
HG	72406000	273.70	4011097770345	344
HG	72407000	71.30	4011097770338	344
HG	72410000	100.80	4011097770420	344
HG	72412000	1,492.80	4011097782508	343
HG	72416000	534.80	4011097770314	345
HG	72417000	385.60	4011097770413	345
HG	72418000	534.80	4011097770406	346
HG	72419000	385.60	4011097770390	346
HG	72600000	155.00	4011097770475	347
HG	72601000	166.30	4011097770468	347
HG	72605000	142.40	4011097770444	347
HG	72606000	47.50	4011097770437	347
HG	72800000	300.00	4059625255452	466
HG	72800670	390.00	4059625255445	466
HG	72800800	390.00	4059625255438	466
HG	72801000	350.00	4059625255421	466
HG	72801670	455.00	4059625255414	466
HG	72801800	455.00	4059625255407	466
HG	72802000	255.00	4059625255391	466
HG	72802670	332.00	4059625255384	466
HG	72802800	332.00	4059625255377	466
HG	72803000	305.00	4059625255360	467
HG	72803670	397.00	4059625255353	467
HG	72803800	397.00	4059625255346	467
HG	72804000	205.00	4059625255339	467
HG	72804670	267.00	4059625255322	467
HG	72804800	267.00	4059625255315	467
HG	72806000	180.00	4059625255308	467
HG	72806670	234.00	4059625255292	467
HG	72806800	234.00	4059625255285	467
HG	72808000	205.00	4059625255278	467
HG	72808670	267.00	4059625255261	467
HG	72808800	267.00	4059625255254	467
HG	72809000	255.00	4059625255247	468
HG	72809670	332.00	4059625255230	468
HG	72809800	332.00	4059625255223	468
HG	72810000	252.00	4011097772455	461
HG	72810800	327.70	4011097772462	461
HG	72811000	295.00	4011097823638	461
HG	72812000	284.90	4011097772479	461
HG	72813000	362.00	4011097772493	459
HG	72813800	470.40	4011097772707	459
HG	72814000	221.30	4011097823621	460
HG	72814800	287.60	4011097823614	460
HG	72815000	315.40	4011097823607	460

brand	code no.	Euro	EAN	page
HG	72815800	410.00	4011097823591	460
HG	72816000	252.00	4059625198155	461
HG	72817000	362.00	4059625197981	459
HG	72820000	364.10	4011097772721	459
HG	72820800	473.40	4011097772738	459
HG	72821000	441.00	4011097772752	457
HG	72821800	573.40	4011097772769	457
HG	72822000	391.50	4011097823584	458
HG	72822800	508.90	4011097823577	458
HG	72823000	441.50	4059625255667	456
HG	72823800	574.20	4059625255650	456
HG	72824000	392.10	4059625255643	458
HG	72824800	509.20	4059625255636	458
HG	72825000	364.10	4059625198186	459
HG	72826000	441.00	4059625198209	457
HG	72831000	480.80	4059625203156	463
HG	72832000	406.70	4059625203149	464
HG	72840000	175.00	4059625269909	468
HG	72840670	228.00	4059625269695	468
HG	72840800	228.00	4059625255193	468
HG	72842000	300.00	4059625269909	466
HG	72842670	390.00	4059625269695	466
HG	72843000	205.00	4059625269688	467
HG	72843670	266.50	4059625269671	467
HG	72844000	180.00	4059625269664	467
HG	72844670	234.00	4059625269657	467
HG	72845000	205.00	4059625269640	467
HG	72845670	266.50	4059625269633	467
73				
HG	73560000	126.00	4059625136584	423
HG	73561000	61.40	4059625131503	423
HG	73800000	458.30	4059625017630	454
HG	73800800	578.50	4059625017623	454
HG	73801000	507.50	4059625017616	453
HG	73801800	642.30	4059625017609	453
HG	73802000	468.90	4059625017593	452
HG	73802800	592.20	4059625017586	452
HG	73803000	518.30	4059625017579	450
HG	73803800	656.30	4059625017562	450
HG	73804000	526.90	4059625017555	448
HG	73804800	685.00	4059625017548	448
HG	73805000	547.90	4059625017531	446
HG	73805800	712.30	4059625017524	446
HG	73806000	590.00	4059625017517	446
HG	73806800	767.10	4059625017500	446
HG	73807000	518.30	4059625198292	450
HG	73812000	421.00	4059625017494	455
HG	73812800	530.50	4059625017487	455
HG	73816000	519.00	4059625176221	449
HG	73816800	653.10	4059625176207	449
HG	73817000	471.00	4059625176184	451
HG	73817800	590.90	4059625176177	451
HG	73818000	527.40	4059625176160	447
HG	73818340	790.50	4059625229590	447
HG	73818670	737.30	4059625232514	447
HG	73818800	681.00	4059625176153	447
HG	73819000	470.00	4059625255629	447
HG	73819800	611.00	4059625255612	447
HG	73820000	475.80	4059625255605	448
HG	73820800	618.50	4059625255599	448
HG	73822000	424.50	4059625255582	450
HG	73822800	552.10	4059625255575	450
HG	73823000	458.30	4059625198254	454
HG	73824000	507.50	4059625198230	453
HG	73825000	526.90	4059625198223	448
HG	73826000	547.90	4059625198261	446
HG	73827000	590.00	4059625198247	446
HG	73828000	421.00	4059625198278	455
HG	73830000	600.00	4059625255568	445
HG	73830800	780.00	4059625255551	445
HG	73831000	650.00	4059625255179	445
HG	73831800	850.00	4059625255155	445
HG	73836000	550.00	4059625269442	445
HG	73836800	720.00	4059625269435	445
HG	73837000	600.00	4059625269428	445
HG	73837800	780.00	4059625269411	445
HG	73850000	363.50	4059625017456	461
HG	73850800	455.20	4059625017449	461
HG	73851000	408.70	4059625017432	460
HG	73851800	513.70	4059625017425	460
HG	73852000	437.30	4059625017418	459
HG	73852800	551.10	4059625017401	459
HG	73853000	485.40	4059625017395	457
HG	73853800	613.60	4059625017388	457
HG	73860000	375.30	4059625017364	462
HG	73860800	470.60	4059625017357	462
HG	73861000	349.10	4059625017340	463
HG	73863000	523.80	4059625017319	464
HG	73863800	663.60	4059625017302	464
HG	73864000	452.00	4059625017296	465
HG	73864800	570.30	4059625017289	465
HG	73867000	487.00	4059625176085	456
HG	73867800	611.60	4059625176078	456
HG	73868000	440.30	4059625176061	458
HG	73868800	550.90	4059625176054	458
HG	73869000	375.30	4059625198315	462
HG	73876000	408.70	4059625198339	460
HG	73878000	452.00	4059625198353	465
HG	73879000	523.80	4059625198377	464
HG	73880000	300.20	4059625017210	469
HG	73880800	373.60	4059625017203	469
HG	73895000	300.20	4059625198438	469
74				
HG	74500000	268.70	4011097813226	278
HG	74502000	273.90	4011097813202	277
HG	74506000	289.80	4011097813141	276
HG	74507000	295.00	4011097813103	276
HG	74511000	389.80	4011097813066	279
HG	74512000	400.40	4011097813028	280
HG	74514000	374.10	4011097835129	280
HG	74515000	389.80	4011097835112	280
HG	74520000	368.80	4011097812960	283
HG	74522000	374.10	4011097812939	283
HG	74525000	337.20	4011097835105	281
HG	74526000	358.30	4011097835099	281
HG	74530000	1,127.40	4011097835082	282
HG	74532000	1,654.30	4011097835075	284
HG	74540000	347.80	4011097812915	285
HG	74545000	242.40	4011097826028	286
HG	74546000	337.20	4011097826004	286
HG	74548000	284.50	4011097835068	288
HG	74550000	653.30	4011097835051	289
HG	74551000	495.20	4011097835044	290
HG	74552000	653.30	4011097835037	291
HG	74553000	495.20	4011097835020	292
HG	74560000	242.40	4011097812878	293
HG	74565000	226.50	4011097825793	293

brand	code no.	Euro	EAN	page
92				
HG	92017000	32.30	4011097143477	540
HG	92018000	13.20	4011097166285	540
HG	92019000	3.70	4011097153872	541
HG	92027000	20.40	4011097138312	540
HG	92107000	13.20	4011097132921	539
HG	92109000	26.10	4011097166940	539
HG	92109450	32.30	4011097166971	539
HG	92109880	32.30	4011097167046	539
HG	92571450	23.20	4011097780931	229
HG	92571610	23.20	4011097781136	229
HG	92572450	23.20	4011097780948	229
HG	92572610	23.20	4011097781143	229
HG	92573450	23.20	4011097780955	229
HG	92573610	23.20	4011097781204	229
HG	92574450	23.20	4011097780979	229
HG	92574610	23.20	4011097781167	229
HG	92575450	23.20	4011097780986	229
HG	92575610	23.20	4011097781174	229
HG	92576450	23.20	4011097780993	229
HG	92576610	23.20	4011097781181	229
HG	92577450	23.20	4011097781105	229
HG	92577610	23.20	4011097781198	229
HG	92578450	23.20	4011097780962	229
HG	92578610	23.20	4011097781150	229
HG	92579450	23.20	4011097780924	229
HG	92579610	23.20	4011097781112	229
HG	92601000	117.40	4011097133249	546
HG	92605000	26.10	4011097133287	546
HG	92620000	20.40	4011097189451	552
HG	92620450	32.30	4011097133447	552
HG	92631000	181.00	4011097133546	546
HG	92730000	41.50	4011097222776	543
93				
HG	93124000	8.20	4059625015629	73
HG	93146000	90.50	4059625030301	175
HG	93286000	26.10	4059625136188	423
HG	93500000	12.00	4059625222478	246
HG	93571670	9.20	4059625270134	236
HG	93571700	9.20	4059625270127	236
HG	93571880	6.10	4059625141892	236
HG	93572670	9.20	4059625270110	236
HG	93572700	9.20	4059625270103	236
HG	93572880	6.10	4059625142608	236
HG	93573670	9.20	4059625270097	236
HG	93573700	9.20	4059625270080	236
HG	93573880	6.10	4059625142615	236
HG	93574670	9.20	4059625270073	236
HG	93574700	9.20	4059625270066	236
HG	93574880	6.10	4059625142622	236
HG	93575670	9.20	4059625270059	236
HG	93575700	9.20	4059625270042	236
HG	93575880	6.10	4059625142639	236
HG	93576670	9.20	4059625270035	236
HG	93576700	9.20	4059625270028	236
HG	93576880	6.10	4059625142646	236
HG	93577670	9.20	4059625270011	236
HG	93577700	9.20	4059625270004	236
HG	93577880	6.10	4059625142653	236
HG	93578670	9.20	4059625269992	237
HG	93578700	9.20	4059625269985	237
HG	93578880	6.10	4059625142660	237
HG	93579670	9.20	4059625269978	236
HG	93579700	9.20	4059625269961	236
HG	93579880	6.10	4059625142677	236
94				
AX	94004000	117.40	4011097200224	543
AX	94005000	16.30	4011097228907	545
HG	94008000	26.10	4011097326849	546
HG	94009000	26.10	4011097326894	546
HG	94033000	6.10	4011097399256	544
HG	94051000	10.10	4011097210315	539
HG	94053000	13.20	4011097204314	539
HG	94055000	13.20	4011097259536	539
HG	94063000	6.10	4011097256412	551
HG	94074000	10.10	4011097242606	551
HG	94076000	20.40	4011097262291	551
HG	94077000	26.10	4011097345024	546
HG	94078000	10.10	4011097399218	551
HG	94129000	62.40	4011097177106	553
HG	94130000	13.20	4011097232423	550
HG	94135000	8.20	4011097213071	550
HG	94139000	60.70	4011097178752	436
HG	94140000	32.30	4011097203799	552
HG	94141000	117.40	4011097183817	546
HG	94142000	20.40	4011097183800	546
HG	94148000	51.10	4011097177120	553
HG	94149000	20.40	4011097178745	546
HG	94156000	13.20	4011097184111	544
AX	94183000	26.10	4011097241098	545
AX	94184000	3.70	4011097233246	551
HG	94246000	2.30	4011097134888	541
AX	94272000	51.10	4011097135168	550
HG	94282000	90.50	4011097239040	546
HG	94283000	181.00	4011097241388	546
HG	94850000	16.30	4011097232638	544
95				
HG	95014000	41.50	4011097404332	546
HG	95039000	3.70	4011097326832	551
HG	95048000	51.10	4011097263748	553
AX	95052000	72.70	4011097238715	543
AX	95053000	20.40	4011097362571	544
HG	95064000	13.20	4011097363813	539
HG	95065520	51.10	4011097296050	537
HG	95065530	51.10	4011097296067	537
HG	95065840	72.70	4011097296036	537
HG	95065880	51.10	4011097296043	537
HG	95239000	10.10	4011097611686	193
HG	95960000	26.10	4011097696621	171
96				
HG	96006000	2.30	4011097256955	552
HG	96016000	20.40	4011097400204	552
HG	96026000	16.30	4011097136011	554
HG	96026450	26.10	4011097136042	554
HG	96026880	20.40	4011097136073	554
HG	96027000	16.30	4011097684505	554
HG	96027800	26.10	4011097234953	554
HG	96083000	20.40	4011097136264	549
HG	96100000	3.70	4011097136547	552
HG	96153000	20.40	4011097136745	554
HG	96170000	51.10	4011097136844	536
HG	96177450	13.20	4011097158228	539
HG	96177840	32.30	4011097158235	539
HG	96177880	13.20	4011097158242	539
HG	96179000	8.20	4011097176468	541
HG	96184000	7.50	4011097150512	107
HG	96186000	8.00	4011097161754	540
HG	96187000	10.10	4011097176406	539

brand	code no.	Euro	EAN	page
HG	96187840	26.10	4011097176444	539
HG	96187880	20.40	4011097176451	539
HG	96188000	3.70	4011097176475	539
HG	96189000	3.70	4011097176482	539
HG	96190000	51.10	4011097176499	537
HG	96190330	62.40	4011097218915	537
HG	96190430	62.40	4011097178141	537
HG	96190450	62.40	4011097178172	537
HG	96190460	62.40	4011097178158	537
HG	96190480	62.40	4011097178165	537
HG	96190610	62.40	4011097178189	537
HG	96190770	62.40	4011097178226	537
HG	96190840	90.50	4011097178202	537
HG	96190880	62.40	4011097363707	537
HG	96191000	16.30	4011097176505	540
HG	96191450	20.40	4011097176512	540
HG	96192000	6.10	4011097249759	538
HG	96193000	3.70	4011097461069	538
HG	96194000	6.10	4011097326207	539
HG	96195000	90.50	4011097284743	537
HG	96195840	181.00	4011097284750	537
HG	96195880	147.80	4011097284774	537
HG	96200000	41.50	4011097137100	553
HG	96272000	16.30	4011097414799	539
HG	96324000	16.30	4011097399966	552
HG	96339000	51.10	4011097363295	543
HG	96370000	44.80	4011097345000	242
AX	96380000	8.20	4011097344997	75
HG	96387000	51.30	4011097361093	550
HG	96392000	20.40	4011097405704	554
HG	96396000	27.80	4011097367583	550
AX	96441000	117.40	4011097432717	260
AX	96467000	13.20	4011097409405	550
HG	96507000	26.10	4011097603285	551
HG	96529000	13.20	4011097391427	544
HG	96615000	33.00	4011097391502	247
HG	96618000	20.40	4011097441245	549
HG	96657000	8.20	4011097460284	552
HG	96657800	16.30	4011097497372	552
HG	96708000	6.10	4011097436104	541
AX	96770000	181.00	4011097544205	541
HG	96919000	51.10	4011097492360	549
HG	96920000	72.70	4011097477930	549
97				
HG	97116000	41.50	4011097475714	540
HG	97117000	51.10	4011097438726	537
HG	97231000	13.20	4011097481876	549
HG	97336000	62.40	4011097478609	537
HG	97450000	8.00	4011097487304	106
AX	97462000	26.10	4011097491059	545
HG	97592000	16.30	4011097505954	547
98				
HG	98003000	2.30	4011097137568	553
HG	98058000	2.30	4011097137711	541
HG	98066000	2.30	4011097397344	553
HG	98069000	2.30	4011097137766	553
HG	98556000	20.40	4011097481883	541
AX	98610000	26.10	4011097528601	545
HG	98681000	13.20	4011097545714	540
HG	98804000	20.40	4011097568744	543
HG	98806000	3.70	4011097570822	554
HG	98993000	7.50	4011097589657	102

Hand showers



Rainfinity	page 56		Raindance Select E	page 56	
Raindance Select S	page 57		Croma Select E	page 58	
Croma Select S	page 58		PuraVida	page 59	
Croma 100	page 60		Crometta 100	page 61	
Crometta	page 62		Crometta 85	page 62	

Selected hand showers at a glance

		Crometta®			Croma® 100	
						
		Crometta® 100 Hand shower 1jet	**Crometta® 100** Hand shower Vario	**Crometta® 100** Hand shower Multi	**Croma® 100** Hand shower Multi	**Croma® Select E** Hand shower 1jet
Versions	Standard	26825, -400	26824, -400	26823, -400	28536, -000	26814, -400
	EcoSmart 9 l/min	26828, -400	26827, -400	26826, -400	28538, -000	26815, -400
	Green 6–7 l/min	26829, -400	26834, -400			26816, -400
Features	Size of shower head	100 mm	100 mm	100 mm	100 mm	110 mm
	Spray type changeover		Turn	Turn	Turn	
	Spray modes (l/min in the standard version)	Rain 16 l/min	Rain 18 l/min Massage 18 l/min	Rain 19 l/min Massage 19 l/min TurboRain 19 l/min	Rain 19 l/min Massage 19 l/min MonoRain 19 l/min	Rain 16 l/min
Uniques	Select					
	AirPower					
	QuickClean	■	■	■	■	■

						
		Crometta® Hand shower 1jet	**Crometta®** Hand shower Vario		**Croma® 100** Hand shower Vario	**Croma® Select S** Hand shower 1jet
Versions	Standard	26331, -400	26330, -400		28535, -000	26804, -400
	EcoSmart 9 l/min	26333, -400	26332, -400		28537, -000	26805, -400
	Green 6–7 l/min	26334, -400	26336, -400			26806, -400
Features	Size of shower head	100 mm	100 mm		100 mm	110 mm
	Spray type changeover		Turn		Turn	
	Spray modes (l/min in the standard version)	Rain 14 l/min	Rain 14 l/min IntenseRain 14 l/min		Rain 18 l/min Massage 18 l/min	Rain 16 l/min
Uniques	Select					
	AirPower					
	QuickClean	■	■		■	■

■ Available

Croma® Select		Raindance® Select			Rainfinity®	PuraVida®
						
Croma® Select E Hand shower Vario	**Croma® Select E** Hand shower Multi	**Raindance® Select S** Hand shower 120 3jet P	**Raindance® Select E** Hand shower 120 3jet	**Raindance® Select E** Hand shower 150 3jet	**Rainfinity®** Hand shower 130 3jet	**PuraVida®** Hand shower 3jet
26812, -400	26810, -400	26014, -000	26520, -000- 400	26550, -000- 400	26864, -XXX	28557, -000, -400
26813, -400	26811, -400		26521, -000- 400	26551, -000- 400	26865, -000, -700	28567, -000, -400
110 mm	110 mm	125 mm	120 mm	150 mm	130 mm	150 mm
Select	Select	Select	Select	Select	Select	Select
Rain 15 l/min IntenseRain 15 l/min TurboRain 15 l/min	Massage 16 l/min IntenseRain 16 l/min SoftRain 16 l/min	Rain 12 l/min Whirl 12 l/min PowderRain 12 l/min	RainAir 15 l/min Rain 15 l/min Whirl 15 l/min	RainAir 16 l/min CaresseAir 16 l/min Mix 16 l/min	PowderRain 14 l/min Intense PowderRain 14 l/min MonoRain 14 l/min	RainAir 16 l/min CaresseAir 16 l/min Mix 16 l/min
■	■	■	■	■	■	■
			■	■		■
■	■	■	■	■	■	■

						
Croma® Select S Hand shower Vario	**Croma® Select S** Hand shower Multi		**Raindance® Select S** Hand shower 120 3jet	**Raindance® Select S** Hand shower 150 3jet	**Rainfinity®** Baton hand shower 100 1jet	**PuraVida®** Baton hand shower 120 1jet
26802, -400	26800, -400		26530, -XXX	28587, -000- 400	26866, -XXX	28558, -000, -400
26803, -400	26801, -400		26531, -XXX	28588, -000- 400	26867, -000, -700	28568, -000, -400
110 mm	110 mm		120 mm	150 mm	100 mm	150 mm
Select	Select		Select	Select		
Rain 15 l/min IntenseRain 15 l/min TurboRain 15 l/min	Massage 16 l/min IntenseRain 16 l/min SoftRain 16 l/min		RainAir 15 l/min Rain 15 l/min Whirl 15 l/min	RainAir 16 l/min CaresseAir 16 l/min Mix 16 l/min	PowderRain 13,8 l/min	RainAir 16 l/min
■	■		■	■		
			■	■		■
■	■		■	■	■	■

Price

All specified flow rates are based on an operating pressure of 0.3 MPa (3 bar).

Rainfinity

	finish	code no.	Euro
Rainfinity Hand shower 130 3jet · shower head size: 130 mm · convenient diversion via Select button · spray type: PowderRain, Intense PowderRain, MonoRain · flow rate at 3 bar: 14 l/min · with internal water conduction · rinseable dirt filter · connection thread G ½ · connection dimension: DN15 · suitable for continous flow water heaters	Chrome	26864000	95.00
	Brushed Bronze*	26864140	142.50
	Brushed Black Chrome*	26864340	142.50
	Matt Black*	26864670	123.50
	Matt White	26864700	123.50
	Polished Gold Optic*	26864990	142.50
	Select · Quick Clean · XXL Performance		
Water saving EcoSmart version: · Rainfinity Hand shower 130 3jet EcoSmart	Chrome	26865000	95.00
	Brushed Bronze*	26865140	142.50
	Brushed Black Chrome*	26865340	142.50
	Matt Black*	26865670	123.50
	Matt White	26865700	123.50
	Polished Gold Optic*	26865990	142.50

*** available from April 2020**



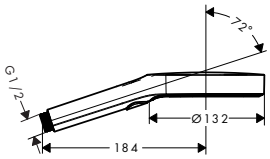

	finish	code no.	Euro
Rainfinity Baton hand shower 100 1jet · shower head size: 100 mm · spray type: PowderRain · flow rate at 3 bar: 13.8 l/min · with internal water conduction · rinseable dirt filter · connection thread G ½ · connection dimension: DN15 · suitable for continous flow water heaters	Chrome	26866000	80.00
	Brushed Bronze*	26866140	120.00
	Brushed Black Chrome*	26866340	120.00
	Matt Black*	26866670	104.00
	Matt White	26866700	104.00
	Polished Gold Optic*	26866990	120.00
	Quick Clean		
Water saving EcoSmart version: · Rainfinity Baton hand shower 100 1jet EcoSmart	Chrome	26867000	80.00
	Brushed Bronze*	26867140	120.00
	Brushed Black Chrome*	26867340	120.00
	Matt Black*	26867670	104.00
	Matt White	26867700	104.00
	Polished Gold Optic*	26867990	120.00

*** available from April 2020**



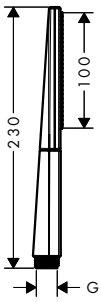

Raindance Select E

	finish	code no.	Euro
Raindance Select E Hand shower 150 3jet · hand shower with 2-shell construction · shower head size: 150 mm · convenient diversion via Select button · spray type: RainAir, CaresseAir, Mix · flow rate at 3 bar: 16 l/min · with internal water conduction · rinseable dirt filter · connection thread G ½ · connection dimension: DN15 · suitable for continous flow water heaters · installation instructions: the hand shower shouldn't be combined with sliders which have two adjustable positions	Chrome	26550000	109.10
	White/Chrome	26550400	109.10
	Select · Air Power · Quick Clean · XXL Performance		
Water saving EcoSmart version: · Raindance Select E Hand shower 150 3jet EcoSmart 9 l/min	Chrome	26551000	109.10
	White/Chrome	26551400	109.10



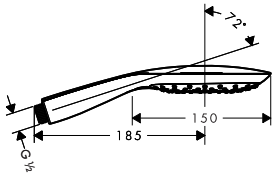

Measurements within scale drawings are in mm.

Technical specifications and units of measure are subject to change.

		finish	code no.	Euro
Raindance Select E Hand shower 120 3jet · shower head size: 120 mm · convenient diversion via Select button · spray type: RainAir, Rain, Whirl · flow rate at 3 bar: 15 l/min · with internal water conduction · rinseable dirt filter · connection thread G ½ · connection dimension: DN15 · suitable for continous flow water heaters		Chrome	26520000	85.30
	NEW	Brushed Bronze	26520140	128.00
	NEW	Brushed Black Chrome	26520340	128.00
		White/Chrome	26520400	85.30
	NEW	Matt Black	26520670	119.80
	NEW	Matt White	26520700	119.80
	NEW	Polished Gold Optic	26520990	128.00
		Select · Air Power · Quick Clean · XXL Performance		
Water saving EcoSmart version: · Raindance Select E Hand shower 120 3jet EcoSmart 9 l/min		Chrome	26521000	85.30
		White/Chrome	26521400	85.30

Raindance Select S

		finish	code no.	Euro
Raindance Select S Hand shower 150 3jet · hand shower with 2-shell construction · shower head size: 150 mm · convenient diversion via Select button · spray type: RainAir, CaresseAir, Mix · flow rate at 3 bar: 16 l/min · with internal water conduction · rinseable dirt filter · connection thread G ½ · connection dimension: DN15 · suitable for continous flow water heaters · installation instructions: the hand shower shouldn't be combined with sliders which have two adjustable positions		Chrome	28587000	109.10
		White/Chrome	28587400	109.10
		Select · Air Power · Quick Clean · XXL Performance		
Water saving EcoSmart version: · Raindance Select S Hand shower 150 3jet EcoSmart 9 l/min		Chrome	28588000	109.10
		White/Chrome	28588400	109.10
Raindance Select S Hand shower 120 3jet PowderRain · shower head size: 125 mm · convenient diversion via Select button · spray type: PowderRain, Rain, Whirl · flow rate at 3 bar: 12 l/min · with internal water conduction · rinseable dirt filter · connection thread G ½ · connection dimension: DN15 · suitable for continous flow water heaters		Chrome	26014000	87.00
		Select · Quick Clean · XXL Performance		
Raindance Select S Hand shower 120 3jet · shower head size: 125 mm · convenient diversion via Select button · spray type: Rain, RainAir, Whirl · flow rate at 3 bar: 15 l/min · with internal water conduction · rinseable dirt filter · connection thread G ½ · connection dimension: DN15 · suitable for continous flow water heaters		Chrome	26530000	85.30
	NEW	Brushed Bronze*	26530140	128.00
	NEW	Brushed Black Chrome*	26530340	128.00
		White/Chrome	26530400	85.30
	NEW	Matt Black*	26530670	119.80
	NEW	Matt White*	26530700	119.80
	NEW	Polished Gold Optic*	26530990	128.00
		Select · Air Power · Quick Clean · XXL Performance		
Water saving EcoSmart version: · Raindance Select S Hand shower 120 3jet EcoSmart 9 l/min	**NEW**	Chrome	26531000	85.30
	NEW	Brushed Bronze*	26531140	128.00
		Brushed Black Chrome*	26531340	128.00
	NEW	White/Chrome	26531400	85.30
	NEW	Matt Black*	26531670	119.80
	NEW	Matt White*	26531700	119.80
		Polished Gold Optic*	26531990	128.00

***available from April 2020**

Measurements within scale drawings are in mm.

Technical specifications and units of measure are subject to change.

Croma Select E

		finish	code no.	Euro
	**Croma Select E Hand shower Multi** · shower head size: 110 mm · convenient diversion via Select button · spray type: SoftRain, IntenseRain, Massage spray · flow rate at 3 bar: 16 l/ min · with internal water conduction · rinseable dirt filter · connection thread G ½ · connection dimension: DN15 · suitable for continous flow water heaters	White/Chrome	26810400	60.80
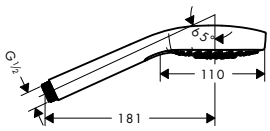	**Water saving EcoSmart version:** · Croma Select E Hand shower Multi EcoSmart 9 l/ min	White/Chrome	26811400	60.80
	**Croma Select E Hand shower Vario** · shower head size: 110 mm · convenient diversion via Select button · spray type: Rain, IntenseRain, TurboRain · flow rate at 3 bar: 15 l/ min · with internal water conduction · rinseable dirt filter · connection thread G ½ · connection dimension: DN15 · suitable for continous flow water heaters	White/Chrome	26812400	46.40
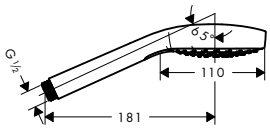	**Water saving EcoSmart version:** · Croma Select E Hand shower Vario EcoSmart 9 l/ min	White/Chrome	26813400	46.40
	**Croma Select E Hand shower 1jet** · shower head size: 110 mm · spray type: Rain · flow rate at 3 bar: 16 l/ min · with internal water conduction · rinseable dirt filter · connection thread G ½ · connection dimension: DN15 · suitable for continous flow water heaters	White/Chrome	26814400	34.80
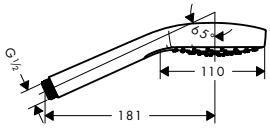	**Water saving EcoSmart version:** · Croma Select E Hand shower 1jet EcoSmart 9 l/ min	White/Chrome	26815400	34.80
	· Croma Select E Hand shower 1jet EcoSmart 7 l/ min	White/Chrome	26816400	34.80

Croma Select S

		finish	code no.	Euro
	**Croma Select S Hand shower Multi** · shower head size: 110 mm · convenient diversion via Select button · spray type: SoftRain, IntenseRain, Massage spray · flow rate at 3 bar: 16 l/ min · with internal water conduction · rinseable dirt filter · connection thread G ½ · connection dimension: DN15 · suitable for continous flow water heaters	White/Chrome	26800400	60.80
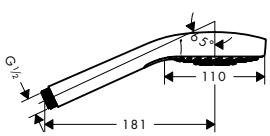	**Water saving EcoSmart version:** · Croma Select S Hand shower Multi EcoSmart 9 l/ min	White/Chrome	26801400	60.80

Measurements within scale drawings are in mm.

Technical specifications and units of measure are subject to change.

	finish	code no.	Euro



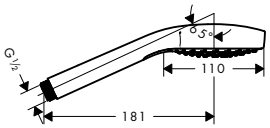

Croma Select S Hand shower Vario — White/Chrome — 26802400 — 46.40
- shower head size: 110 mm
- convenient diversion via Select button
- spray type: Rain, IntenseRain, TurboRain
- flow rate at 3 bar: 15 l/ min
- with internal water conduction
- rinseable dirt filter
- connection thread G ½
- connection dimension: DN15
- suitable for continous flow water heaters

Water saving EcoSmart version:
- Croma Select S Hand shower Vario EcoSmart 9 l/ min — White/Chrome — 26803400 — 46.40



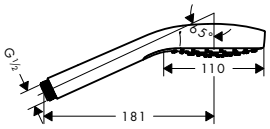

Croma Select S Hand shower 1jet — White/Chrome — 26804400 — 34.80
- shower head size: 110 mm
- spray type: Rain
- flow rate at 3 bar: 16 l/ min
- with internal water conduction
- rinseable dirt filter
- connection thread G ½
- connection dimension: DN15
- suitable for continous flow water heaters

Water saving EcoSmart version:
- Croma Select S Hand shower 1jet EcoSmart 9 l/ min — White/Chrome — 26805400 — 34.80
- Croma Select S Hand shower 1jet EcoSmart 7 l/ min — White/Chrome — 26806400 — 34.80

PuraVida



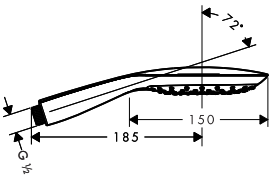

PuraVida Hand shower 3jet — Chrome — 28557000 — 163.00; White/Chrome — 28557400 — 163.00
- hand shower with 2-shell construction
- shower head size: 150 mm
- convenient diversion via Select button
- spray type: RainAir, CaresseAir, Mix
- flow rate at 3 bar: 16 l/ min
- with internal water conduction
- rinseable dirt filter
- connection thread G ½
- connection dimension: DN15
- suitable for continous flow water heaters
- installation instructions: the hand shower shouldn't be combined with sliders which have two adjustable positions

Water saving EcoSmart version:
- PuraVida Hand shower 3jet EcoSmart 9 l/ min — Chrome — 28567000 — 167.40; White/Chrome — 28567400 — 167.40



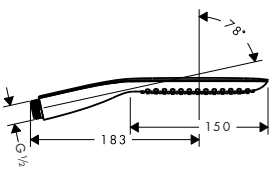

PuraVida Baton hand shower 120 1jet — Chrome — 28558000 — 102.60; White/Chrome — 28558400 — 102.60
- hand shower with 2-shell construction
- shower head size: 150 mm
- spray type: RainAir
- flow rate at 3 bar: 16 l/ min
- with internal water conduction
- rinseable dirt filter
- connection thread G ½
- connection dimension: DN15
- suitable for continous flow water heaters

Water saving EcoSmart version:
- PuraVida Baton hand shower 120 1jet EcoSmart 9 l/ min — Chrome — 28568000 — 107.40; White/Chrome — 28568400 — 107.40

Measurements within scale drawings are in mm.

Technical specifications and units of measure are subject to change.

Raindance Classic



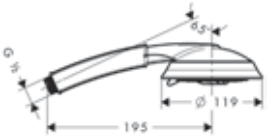

	finish	code no.	Euro
Raindance Classic Hand shower 100 3jet · shower head size: 119 mm · spray type adjustment by turning spray disc · spray type: RainAir, Whirl, BalanceAir · flow rate at 3 bar: 17 l/ min · rinseable dirt filter · connection thread G ½ · connection dimension: DN15 · suitable for continous flow water heaters	Chrome	28548000	146.80
	Chrome/Gold Optic	28548090	183.60

Croma 100



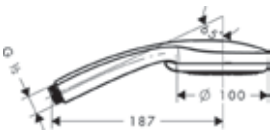

Croma 100 Hand shower Multi · shower head size: 100 mm · spray type adjustment by turning spray disc · spray type: Rain, MonoRain, Massage spray · flow rate at 3 bar: 19 l/ min · with internal water conduction · rinseable dirt filter · connection thread G ½ · connection dimension: DN15 · suitable for continous flow water heaters	Chrome	28536000	62.40
Water saving EcoSmart version: · Croma 100 Hand shower Multi EcoSmart 9 l/ min	Chrome	28538000	66.90



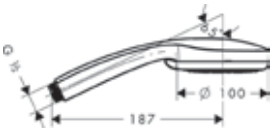

Croma 100 Hand shower Vario · shower head size: 100 mm · spray type adjustment by turning spray disc · spray type: Rain, normal spray, Shampoo spray, Massage spray · flow rate at 3 bar: 18 l/ min · with internal water conduction · rinseable dirt filter · connection thread G ½ · connection dimension: DN15 · suitable for continous flow water heaters	Chrome	28535000	35.10
Water saving EcoSmart version: · Croma 100 Hand shower Vario EcoSmart 9 l/ min	Chrome	28537000	39.90



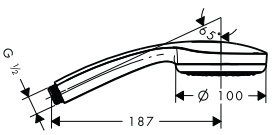

Croma 100 Hand shower Mono · shower head size: 100 mm · spray type: Rain · flow rate at 3 bar: 16 l/ min · with internal water conduction · rinseable dirt filter · connection thread G ½ · connection dimension: DN15 · suitable for continous flow water heaters	Chrome	28580000	28.60
Water saving EcoSmart version: · Croma 100 Hand shower Mono EcoSmart 9 l/ min	Chrome	28583000	33.50

Measurements within scale drawings are in mm.

Technical specifications and units of measure are subject to change.

Croma 100 Classic



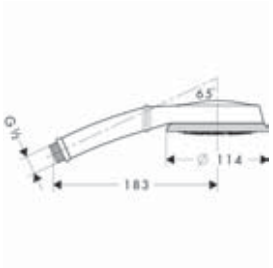

	finish	code no.	Euro
Croma 100 Classic Hand shower Multi · shower head size: 114 mm · spray type adjustment by turning spray disc · spray type: Rain, MonoRain, Massage spray · flow rate at 3 bar: 19 l/min · with internal water conduction · rinseable dirt filter · connection thread G ½ · connection dimension: DN15 · suitable for continous flow water heaters	Chrome	28539000	76.10

Crometta 100



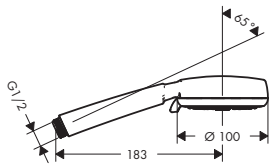

	finish	code no.	Euro
Crometta 100 Hand shower Multi · shower head size: 100 mm · spray type adjustment by turning spray disc · spray type: Rain, TurboRain, Massage spray · flow rate at 3 bar: 19 l/min · with internal water conduction · rinseable dirt filter · connection thread G ½ · connection dimension: DN15 · suitable for continous flow water heaters	White/Chrome	26823400	34.20
Water saving EcoSmart version: · Crometta 100 Hand shower Multi EcoSmart 9 l/min	White/Chrome	26826400	34.20



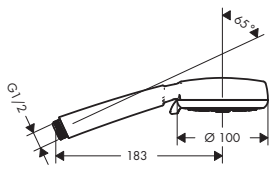

	finish	code no.	Euro
Crometta 100 Hand shower Vario · shower head size: 100 mm · spray type adjustment by turning spray disc · spray type: Rain, normal spray, Shampoo spray, Massage spray · flow rate at 3 bar: 18 l/min · with internal water conduction · rinseable dirt filter · connection thread G ½ · connection dimension: DN15 · suitable for continous flow water heaters	White/Chrome	26824400	26.20
Water saving EcoSmart version: · Crometta 100 Hand shower Vario EcoSmart 9 l/min	White/Chrome	26827400	26.20
· Crometta 100 Hand shower Vario EcoSmart 6 l/min	White/Chrome	26834400	25.50



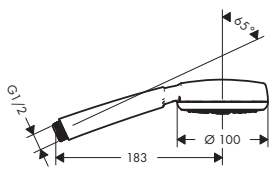

	finish	code no.	Euro
Crometta 100 Hand shower 1jet · shower head size: 100 mm · spray type: Rain · flow rate at 3 bar: 16 l/min · with internal water conduction · rinseable dirt filter · connection thread G ½ · connection dimension: DN15 · suitable for continous flow water heaters	White/Chrome	26825400	20.20
Water saving EcoSmart version: · Crometta 100 Hand shower 1jet EcoSmart 9 l/min	White/Chrome	26828400	20.20
· Crometta 100 Hand shower 1jet EcoSmart 7 l/min	White/Chrome	26829400	20.20

Measurements within scale drawings are in mm.

Technical specifications and units of measure are subject to change.

Crometta

	finish	code no.	Euro
Crometta Hand shower Vario · shower head size: 100 mm · spray type adjustment by turning spray disc · spray type: Rain, IntenseRain · flow rate at 3 bar: 14 l/ min · with internal water conduction · rinseable dirt filter · connection thread G ½ · connection dimension: DN15 · suitable for continous flow water heaters	White/Chrome	26330400	19.50
Water saving EcoSmart version: · Crometta Hand shower Vario Green 6 l/ min	White/Chrome	26336400	21.60
· Crometta Hand shower Vario EcoSmart 9 l/ min	White/Chrome	26332400	21.60



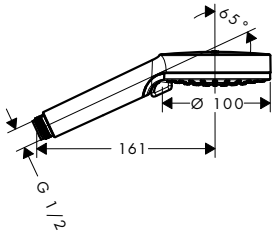

	finish	code no.	Euro
Crometta Hand shower 1jet · shower head size: 100 mm · spray type: Rain · flow rate at 3 bar: 14 l/ min · with internal water conduction · rinseable dirt filter · connection thread G ½ · connection dimension: DN15 · suitable for continous flow water heaters	White/Chrome	26331400	17.30
Water saving EcoSmart version: · Crometta Hand shower 1jet Green 6 l/ min	White/Chrome	26334400	19.50
· Crometta Hand shower 1jet EcoSmart 9 l/ min	White/Chrome	26333400	19.50



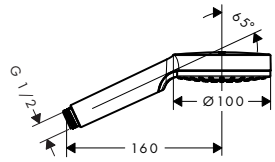

Crometta 85

	finish	code no.	Euro
Crometta 85 Hand shower Multi · shower head size: 85 mm · spray type adjustment by turning spray disc · spray type: normal spray, Massage spray, MonoRain · flow rate at 3 bar: 16 l/ min · with internal water conduction · rinseable dirt filter · connection thread G ½ · connection dimension: DN15 · suitable for continous flow water heaters	Chrome	28563000	37.10



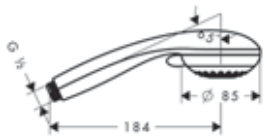

	finish	code no.	Euro
Crometta 85 Hand shower Vario · shower head size: 85 mm · spray type adjustment by turning spray disc · spray type: normal spray, Vario spray · flow rate at 3 bar: 17 l/ min · rinseable dirt filter · connection thread G ½ · connection dimension: DN15 · suitable for continous flow water heaters	Chrome	28562000	21.10



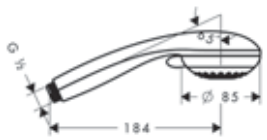

Measurements within scale drawings are in mm.

Technical specifications and units of measure are subject to change.

	finish	code no.	Euro
Crometta 85 Hand shower Mono · shower head size: 85 mm · spray type: normal spray · flow rate at 3 bar: 16 l/min · with internal water conduction · rinseable dirt filter · connection thread G ½ · connection dimension: DN15 · suitable for continous flow water heaters	Chrome	28585000	17.30
Water saving EcoSmart version: · Crometta 85 Hand shower Mono Green 6 l/min	Chrome	28561000	27.30



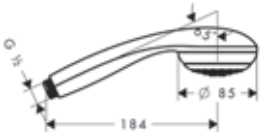

Bidette



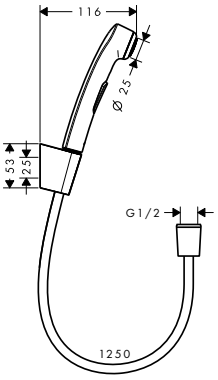

	finish	code no.	Euro
Bidette hand shower 1jet with shower holder and pressure shower hose 125 cm · consists of: bidette hand shower, shower holder, shower hose · flow rate hand shower connection at 0.3 MPa: 6.6 l/min · with non-return valve · maximum flow rate at 0.3 MPa: 6 l/min · additional comment: Surface shower hose chrome	Chrome	32129000	79.80
Consisting of: · Shower holder Porter S (# 28331XXX)			
Alternative sizes: · Bidette hand shower 1jet with shower holder and pressure shower hose 160 cm	Chrome	32128000	81.40



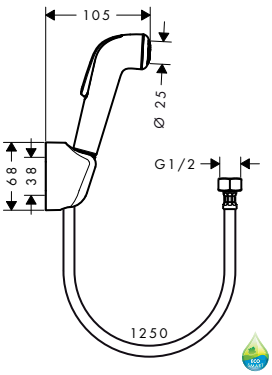

	finish	code no.	Euro
Bidette hand shower 1jet with shower holder and pressure resistant shower hose 125 cm · consists of: bidette hand shower, shower holder, shower hose · with non-return valve · maximum flow rate at 0.3 MPa: 6 l/min · additional comment: Surface shower hose chrome	White/Chrome	32127000	45.40
Consisting of: · Shower holder (# 28321000)			
Alternative sizes: · Bidette hand shower 1jet with shower holder and pressure resistant shower hose 160 cm	White/Chrome	32122000	47.90

Measurements within scale drawings are in mm.

Technical specifications and units of measure are subject to change.

Shower sets / Shower bars / Shower holder



Shower sets	page 66		Shower sets with thermostatic mixer for exposed installation	page 96	
Wall bars	page 101		Shower holder sets	page 108	
Shower holder	page 115		Fixfit wall outlets	page 116	

Rainfinity shower sets

NEW



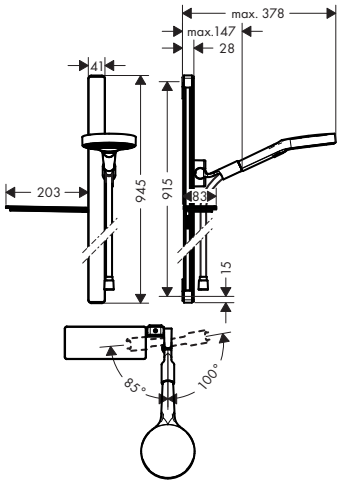

		finish	code no.	Euro
	Rainfinity Shower set 130 3jet with shower bar 90 cm and soap dish · consists of: hand shower, shower bar, shower hose, slider, soap dish · shelf made of safety glass · spray type: PowderRain, Intense PowderRain, MonoRain · convenient diversion via Select button · shower head size: 130 mm · pivot connectors prevent hose from tangling · 90° position adjustable slider, pivots left and right, up and down · fully chrome-plated shower slide · maximum flow rate at 0.3 MPa: 14 l/min · bar width: 41 mm · wall supports of plastic · wall bar type: flat aluminium profile with safety glass finish · finish: chrome	Chrome	27671000	345.00
	Consisting of: · Rainfinity Hand shower 130 3jet (# 26864XXX) · Isiflex Shower hose 160 cm (# 28276XXX) · Casetta Soap dish E (# 26511XXX)			
	Alternative sizes:			
NEW	· Rainfinity Shower set 130 3jet with shower bar 150 cm and soap dishes	Chrome	27673000	445.00
	Water saving EcoSmart version:			
NEW	· Rainfinity Shower set 130 3jet EcoSmart with shower bar 90 cm and soap dish	Chrome	27672000	345.00
	Optional parts:			
	· Casetta Soap dish E	Chrome	26511000	63.20
		White/Chrome	26511400	63.20
		Black/Chrome	26511600	63.20
	· Wall bar spacer	Grey	93124000	8.20

Measurements within scale drawings are in mm.

Technical specifications and units of measure are subject to change.

		finish	code no.	Euro
NEW	**Rainfinity Shower set 130 3jet with shower bar 150 cm and soap dishes** · consists of: hand shower, shower bar, shower hose, slider, soap dishes · shelf made of safety glass · spray type: PowderRain, Intense PowderRain, MonoRain · convenient diversion via Select button · shower head size: 130 mm · pivot connectors prevent hose from tangling · 90° position adjustable slider, pivots left and right, up and down · fully chrome-plated shower slide · maximum flow rate at 0.3 MPa: 14 l/min · bar width: 41 mm · wall supports of plastic · wall bar type: flat aluminium profile with safety glass finish · finish: chrome	Chrome	27673000	445.00
	Consisting of: · Rainfinity Hand shower 130 3jet (# 26864XXX) · Isiflex Shower hose 160 cm (# 28276XXX) · Casetta Soap dish E (# 26511XXX)			
NEW	**Alternative sizes:** · Rainfinity Shower set 130 3jet with shower bar 90 cm and soap dish	Chrome	27671000	345.00
NEW	**Water saving EcoSmart version:** · Rainfinity Shower set 130 3jet EcoSmart 9 l/min with shower bar 150 cm and soap dishes	Chrome	27674000	445.00
	Optional parts: · Casetta Soap dish E	Chrome White/Chrome Black/Chrome	26511000 26511400 26511600	63.20 63.20 63.20
	· Wall bar spacer	Grey	93124000	8.20



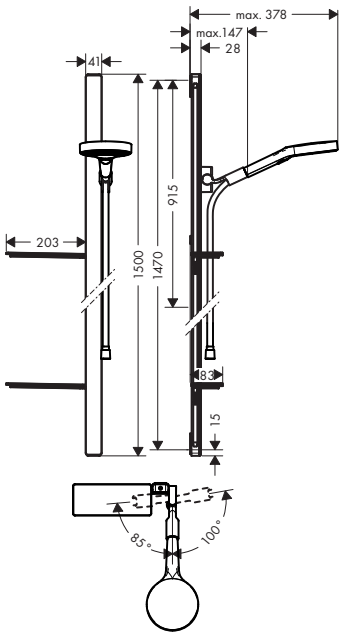

Raindance Select E shower sets



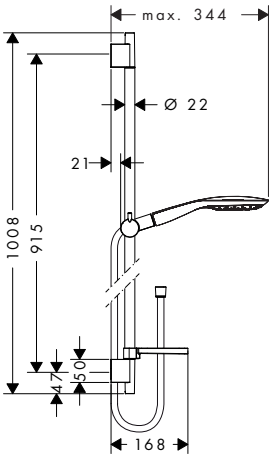

		finish	code no.	Euro
	Raindance Select E Shower set 150 3jet with shower bar 90 cm and soap dish · consists of: hand shower, shower bar, shower hose, slider, soap dish · spray type: RainAir, CaresseAir, Mix · convenient diversion via Select button · shower head size: 150 mm · pivot connectors prevent hose from tangling · 90° position adjustable slider, pivots left and right, up and down · maximum flow rate at 0.3 MPa: 16 l/min · chrome-plated wall supports of plastic	Chrome White/Chrome	27857000 27857400	225.20 225.20
	Consisting of: · Raindance Select E Hand shower 150 3jet (# 26550XXX) · Unica Shower bar S Puro 90 cm with shower hose (# 28631XXX) · Isiflex Shower hose 160 cm (# 28276XXX) · Casetta Soap dish E (# 26519000)			
	Alternative sizes: · Raindance Select E Shower set 150 3jet with shower bar 65 cm and soap dish	Chrome White/Chrome	27856000 27856400	218.00 218.00
	Optional parts: · Wall bar spacer	Chrome	97450000	8.00

Measurements within scale drawings are in mm.

Technical specifications and units of measure are subject to change.



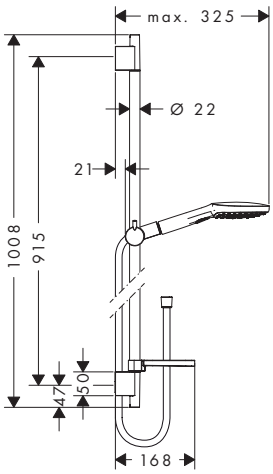

	finish	code no.	Euro
Raindance Select E Shower set 120 3jet with shower bar 90 cm and soap dish	Chrome	26621000	183.70
· consists of: hand shower, shower bar, shower hose, slider, soap dish	White/Chrome	26621400	183.70
· spray type: RainAir, Rain, Whirl			
· convenient diversion via Select button			
· shower head size: 120 mm			
· pivot connectors prevent hose from tangling			
· 90° position adjustable slider, pivots left and right, up and down			
· maximum flow rate at 0.3 MPa: 15 l/min			
· chrome-plated wall supports of plastic			
Consisting of:			
· Raindance Select E Hand shower 120 3jet (# 26520XXX)			
· Unica Shower bar S Puro 90 cm with shower hose (# 28631XXX)			
· Isiflex Shower hose 160 cm (# 28276XXX)			
· Casetta Soap dish E (# 26519000)			
Alternative sizes:			
· Raindance Select E Shower set 120 3jet with shower bar 65 cm and soap dish	Chrome	26620000	177.70
	White/Chrome	26620400	177.70
Water saving EcoSmart version:			
· Raindance Select E Shower set 120 3jet EcoSmart 9 l/min with shower bar 90 cm and soap dish	Chrome	26623000	183.70
	White/Chrome	26623400	183.70
Optional parts:			
· Wall bar spacer	Chrome	97450000	8.00



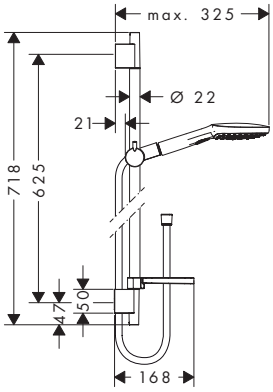

Raindance Select E Shower set 120 3jet with shower bar 65 cm and soap dish	Chrome	26620000	177.70
· consists of: hand shower, shower bar, shower hose, slider, soap dish	White/Chrome	26620400	177.70
· spray type: Rain, RainAir, Whirl			
· convenient diversion via Select button			
· shower head size: 120 mm			
· pivot connectors prevent hose from tangling			
· 90° position adjustable slider, pivots left and right, up and down			
· maximum flow rate at 0.3 MPa: 15 l/min			
Consisting of:			
· Raindance Select E Hand shower 120 3jet (# 26520XXX)			
· Unica Shower bar S Puro 65 cm with shower hose (# 28632XXX)			
· Isiflex Shower hose 160 cm (# 28276XXX)			
· Casetta Soap dish E (# 26519000)			
Alternative sizes:			
· Raindance Select E Shower set 120 3jet with shower bar 90 cm and soap dish	Chrome	26621000	183.70
	White/Chrome	26621400	183.70
Water saving EcoSmart version:			
· Raindance Select E Shower set 120 3jet EcoSmart 9 l/min with shower bar 65 cm and soap dish	Chrome	26622000	177.70
	White/Chrome	26622400	177.70
Optional parts:			
· Wall bar spacer	Chrome	97450000	8.00

Measurements within scale drawings are in mm.

Technical specifications and units of measure are subject to change.

Raindance Select S shower sets

	finish	code no.	Euro
Raindance Select S Shower set 150 3jet with shower bar 90 cm	Chrome	26626000	330.40
· consists of: hand shower, shower bar, shower hose, slider	White/Chrome	26626400	330.40
· spray type: RainAir, CaresseAir, Mix			
· convenient diversion via Select button			
· shower head size: 150 mm			
· pivot connectors prevent hose from tangling			
· 90° position adjustable slider, pivots left and right, up and down			
· maximum flow rate at 0.3 MPa: 16 l/min			
Consisting of:			
· Raindance Select S Hand shower 150 3jet (# 28587XXX)			
· Unica Shower bar Raindance 90 cm with shower hose (# 27636000)			
· Isiflex Shower hose 160 cm (# 28276XXX)			
Optional parts:			
· Raindance Corner fitting set		28694000	32.30
· Raindance Wall bar spacer	Chrome	98993000	7.50





	finish	code no.	Euro
Raindance Select S Shower set 150 3jet with shower bar 90 cm and soap dish	Chrome	27803000	223.90
· consists of: hand shower, shower bar, shower hose, slider, soap dish	White/Chrome	27803400	223.90
· spray type: RainAir, CaresseAir, Mix			
· convenient diversion via Select button			
· shower head size: 150 mm			
· pivot connectors prevent hose from tangling			
· 90° position adjustable slider, pivots left and right, up and down			
· maximum flow rate at 0.3 MPa: 16 l/min			
· chrome-plated wall supports of plastic			
Consisting of:			
· Raindance Select S Hand shower 150 3jet (# 28587XXX)			
· Unica Shower bar S Puro 90 cm with shower hose (# 28631XXX)			
· Isiflex Shower hose 160 cm (# 28276XXX)			
· Casetta Soap dish S Puro (# 28679000)			
Alternative sizes:			
· Raindance Select S Shower set 150 3jet with shower bar 65 cm and soap dish	Chrome	27802000	217.00
	White/Chrome	27802400	217.00
Optional parts:			
· Wall bar spacer	Chrome	97450000	8.00



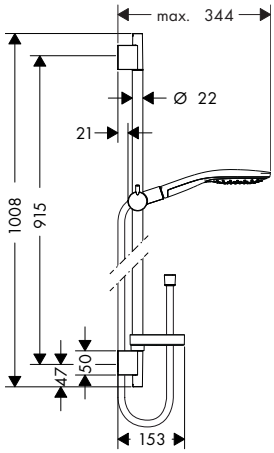

Measurements within scale drawings are in mm.

Technical specifications and units of measure are subject to change.

	finish	code no.	Euro



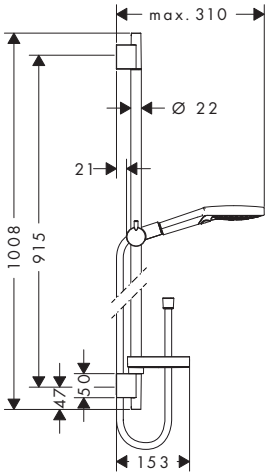

Raindance Select S Shower set 120 3jet PowderRain with shower bar 90 cm

- consists of: hand shower, shower bar, shower hose, slider, soap dish
- spray type: PowderRain, Rain, Whirl
- convenient diversion via Select button
- shower head size: 125 mm
- pivot connectors prevent hose from tangling
- 90° position adjustable slider, pivots left and right, up and down
- maximum flow rate at 0.3 MPa: 12 l/min
- bar width: 22 mm
- chrome-plated wall supports of plastic
- wall mounting: screw fastening

Chrome — 27667000 — 187.40

Select · Quick Clean · XXL Performance

Consisting of:

- Unica Shower bar S Puro 90 cm with shower hose (# 28631XXX)
- Raindance Select S Hand shower 120 3jet PowderRain (# 26014000)
- Isiflex Shower hose 160 cm (# 28276XXX)
- Casetta Soap dish S Puro (# 28679000)

Alternative sizes:

- Raindance Select S Shower set 120 3jet PowderRain with shower bar 65 cm — Chrome — 27654000 — 181.30

Optional parts:

- Wall bar spacer — Chrome — 97450000 — 8.00



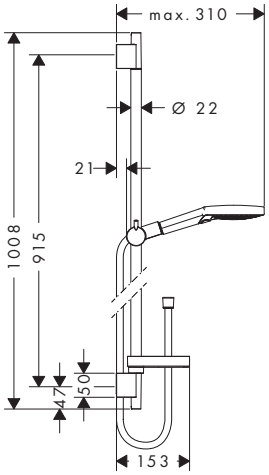

Raindance Select S Shower set 120 3jet with shower bar 90 cm and soap dish

- consists of: hand shower, shower bar, shower hose, slider, soap dish
- spray type: Rain, RainAir, Whirl
- convenient diversion via Select button
- shower head size: 125 mm
- pivot connectors prevent hose from tangling
- 90° position adjustable slider, pivots left and right, up and down
- maximum flow rate at 0.3 MPa: 15 l/min
- chrome-plated wall supports of plastic

Chrome — 26631000 — 183.70
White/Chrome — 26631400 — 183.70

Select · Air Power · Quick Clean · XXL Performance

Consisting of:

- Raindance Select S Hand shower 120 3jet (# 26530XXX)
- Unica Shower bar S Puro 90 cm with shower hose (# 28631XXX)
- Isiflex Shower hose 160 cm (# 28276XXX)
- Casetta Soap dish S Puro (# 28679000)

Alternative sizes:

- Raindance Select S Shower set 120 3jet with shower bar 65 cm and soap dish — Chrome — 26630000 — 177.70; White/Chrome — 26630400 — 177.70

Water saving EcoSmart version:

- Raindance Select S Shower set 120 3jet EcoSmart 9 l/min with shower bar 90 cm and soap dish — Chrome — 26633000 — 183.70; White/Chrome — 26633400 — 183.70

Optional parts:

- Wall bar spacer — Chrome — 97450000 — 8.00

Measurements within scale drawings are in mm.

Technical specifications and units of measure are subject to change.



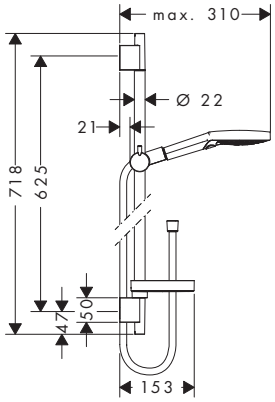

	finish	code no.	Euro
Raindance Select S Shower set 120 3jet with shower bar 65 cm and soap dish · consists of: hand shower, shower bar, shower hose, slider, soap dish · spray type: Rain, RainAir, Whirl · convenient diversion via Select button · shower head size: 125 mm · pivot connectors prevent hose from tangling · 90° position adjustable slider, pivots left and right, up and down · maximum flow rate at 0.3 MPa: 15 l/ min · chrome-plated wall supports of plastic	Chrome White/Chrome	26630000 26630400	177.70 177.70
Consisting of: · Raindance Select S Hand shower 120 3jet (# 26530XXX) · Unica Shower bar S Puro 65 cm with shower hose (# 28632XXX) · Isiflex Shower hose 160 cm (# 28276XXX) · Casetta Soap dish S Puro (# 28679000)			
Alternative sizes: · Raindance Select S Shower set 120 3jet with shower bar 90 cm and soap dish	Chrome White/Chrome	26631000 26631400	183.70 183.70
Water saving EcoSmart version: · Raindance Select S Shower set 120 3jet EcoSmart 9 l/ min with shower bar 65 cm and soap dish	Chrome White/Chrome	26632000 26632400	177.70 177.70
Optional parts: · Wall bar spacer	Chrome	97450000	8.00

Measurements within scale drawings are in mm.

Technical specifications and units of measure are subject to change.

Raindance E shower sets



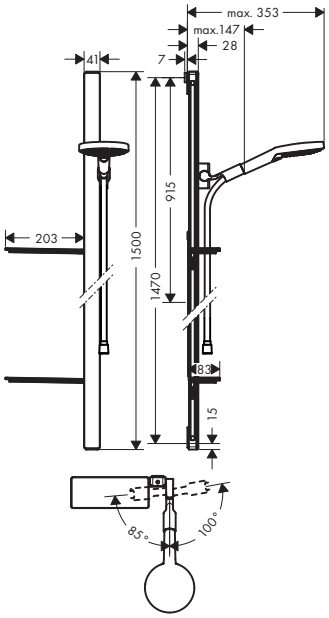

	finish	code no.	Euro
Raindance Select S Shower set 120 3jet with shower bar 150 cm and soap dishes · consists of: hand shower, shower bar, shower hose, slider, soap dishes · shelf made of safety glass · spray type: Rain, RainAir, Whirl · convenient diversion via Select button · shower head size: 125 mm · pivot connectors prevent hose from tangling · 90° position adjustable slider, pivots left and right, up and down · fully chrome-plated shower slide · maximum flow rate at 0.3 MPa: 15 l/min · bar width: 41 mm · wall supports of plastic · wall bar type: flat aluminium profile with safety glass finish · finish: chrome or white	Chrome White/Chrome	27646000 27646400	453.10 453.10
Consisting of: · Isiflex Shower hose 160 cm (# 28276XXX) · Raindance Select S Hand shower 120 3jet (# 26530XXX) · Casetta Soap dish E (# 26511XXX)			
Alternative sizes: · Raindance Select S Shower set 120 3jet with shower bar 90 cm and soap dish	Chrome White/Chrome	27648000 27648400	347.80 347.80
Water saving EcoSmart version: · Raindance Select S Shower set 120 3jet EcoSmart 9 l/min with shower bar 150 cm and soap dishes	Chrome White/Chrome	27647000 27647400	453.10 453.10
Optional parts: · Wall bar spacer · Casetta Soap dish E	Grey Chrome White/Chrome Black/Chrome	93124000 26511000 26511400 26511600	8.20 63.20 63.20 63.20

Measurements within scale drawings are in mm.

Technical specifications and units of measure are subject to change.



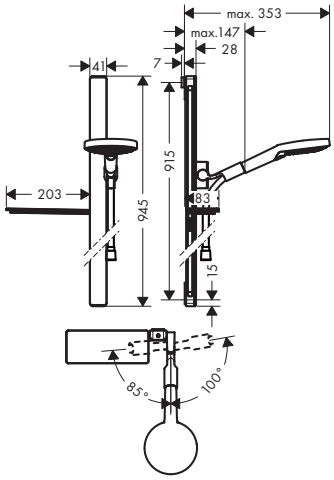

	finish	code no.	Euro
Raindance Select S Shower set 120 3jet with shower bar 90 cm and soap dish · consists of: hand shower, shower bar, shower hose, slider, soap dish · shelf made of safety glass · spray type: Rain, RainAir, Whirl · convenient diversion via Select button · shower head size: 125 mm · pivot connectors prevent hose from tangling · 90° position adjustable slider, pivots left and right, up and down · fully chrome-plated shower slide · maximum flow rate at 0.3 MPa: 15 l/min · bar width: 41 mm · wall supports of plastic · wall bar type: flat aluminium profile with safety glass finish · finish: chrome or white	Chrome White/Chrome	27648000 27648400	347.80 347.80
Consisting of: · Isiflex Shower hose 160 cm (# 28276XXX) · Raindance Select S Hand shower 120 3jet (# 26530XXX) · Casetta Soap dish E (# 26511XXX)			
Alternative sizes: · Raindance Select S Shower set 120 3jet with shower bar 150 cm and soap dishes	Chrome White/Chrome	27646000 27646400	453.10 453.10
Water saving EcoSmart version: · Raindance Select S Shower set 120 3jet EcoSmart 9 l/min with shower bar 90 cm and soap dish	Chrome White/Chrome	27649000 27649400	347.80 347.80
Optional parts: · Wall bar spacer · Casetta Soap dish E	Grey Chrome White/Chrome Black/Chrome	93124000 26511000 26511400 26511600	8.20 63.20 63.20 63.20

Wall bar spacer · height: 7 mm	Grey	93124000	8.20

Measurements within scale drawings are in mm.

Technical specifications and units of measure are subject to change.

Unica Comfort shower sets



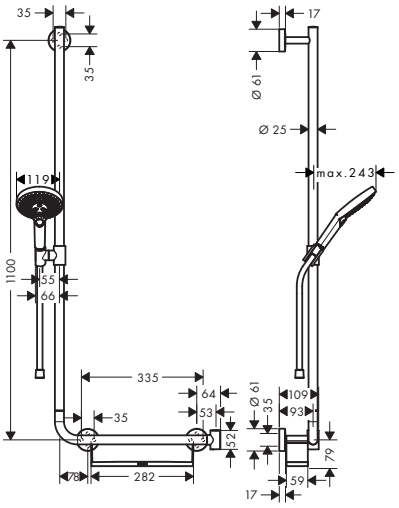

	finish	code no.	Euro
Raindance Select S Shower set 120 3jet with shower bar 110 cm left · consists of: hand shower, shower bar, shelf, shower hose, slider · TÜV certified · shower holder can be removed · wallbar could be also used as grab bar · shelf made of plastic, finish white · shelf can be removed for cleaning · spray type: Rain, RainAir, Whirl · convenient diversion via Select button · shower head size: 120 mm · pivot connectors prevent hose from tangling · 90° position adjustable slider, pivots left and right, up and down · fully chrome-plated metal shower slide · maximum flow rate at 0.3 MPa: 15 l/min · bar width: 25 mm · material: solid brass · chrome-plated wall supports of metal	Chrome White/Chrome	26324000 26324400	380.60 380.60
Consisting of: · Raindance Select S Hand shower 120 3jet (# 26530XXX) · Unica Shower bar Comfort 110 cm left (# 26403400) · Isiflex Shower hose 160 cm (# 28276XXX)			
Alternative sizes: · Raindance Select S Shower set 120 3jet with shower bar 110 cm right	Chrome White/Chrome	26326000 26326400	380.60 380.60
Water saving EcoSmart version: · Raindance Select S Shower set 120 3jet EcoSmart 9 l/min with shower bar 110 cm left	Chrome White/Chrome	26325000 26325400	380.60 380.60
Optional parts: · Unica Foot support Comfort · AXOR Carlton Wall bar spacer 7 mm	Chrome Chrome	26329000 96380000	141.40 8.20

Measurements within scale drawings are in mm.

Technical specifications and units of measure are subject to change.



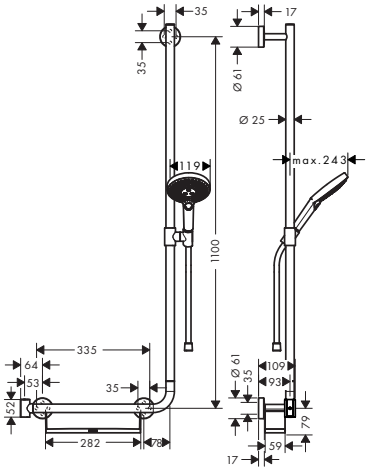

	finish	code no.	Euro
Raindance Select S Shower set 120 3jet with shower bar 110 cm right	Chrome	26326000	380.60
	White/Chrome	26326400	380.60

Select · Air Power · Quick Clean · XXL Performance

- consists of: hand shower, shower bar, shelf, shower hose, slider
- TÜV certified
- shower holder can be removed
- wallbar could be also used as grab bar
- shelf made of plastic, finish white
- shelf can be removed for cleaning
- spray type: Rain, RainAir, Whirl
- convenient diversion via Select button
- shower head size: 120 mm
- pivot connectors prevent hose from tangling
- 90° position adjustable slider, pivots left and right, up and down
- fully chrome-plated metal shower slide
- maximum flow rate at 0.3 MPa: 15 l/min
- bar width: 25 mm
- material: solid brass
- chrome-plated wall supports of metal

Consisting of:

- Unica Shower bar Comfort 110 cm right (# 26404400)
- Raindance Select S Hand shower 120 3jet (# 26530XXX)
- Isiflex Shower hose 160 cm (# 28276XXX)

Alternative sizes:			
· Raindance Select S Shower set 120 3jet with shower bar 110 cm left	Chrome	26324000	380.60
	White/Chrome	26324400	380.60
Water saving EcoSmart version:			
· Raindance Select S Shower set 120 3jet EcoSmart 9 l/min with shower bar 110 cm right	Chrome	26327000	380.60
	White/Chrome	26327400	380.60
Optional parts:			
· Unica Foot support Comfort	Chrome	26329000	141.40
· AXOR Carlton Wall bar spacer 7 mm	Chrome	96380000	8.20

Measurements within scale drawings are in mm.

Technical specifications and units of measure are subject to change.

	finish	code no.	Euro



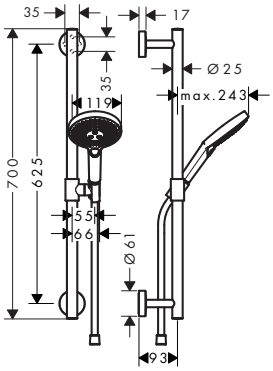

Raindance Select S Shower set 120 3jet with shower bar 65 cm

Chrome	26320000	261.00
White/Chrome	26320400	261.00

Select · Air Power · Quick Clean · XXL Performance

- consists of: hand shower, shower bar, shower hose, slider
- TÜV certified
- wallbar could be also used as grab bar
- spray type: Rain, RainAir, Whirl
- convenient diversion via Select button
- shower head size: 120 mm
- pivot connectors prevent hose from tangling
- 90° position adjustable slider, pivots left and right, up and down
- fully chrome-plated metal shower slide
- maximum flow rate at 0.3 MPa: 15 l/min
- bar width: 25 mm
- material: solid brass
- chrome-plated wall supports of metal

Consisting of:
- Raindance Select S Hand shower 120 3jet (# 26530XXX)
- Unica Shower bar Comfort 65 cm (# 26401000)
- Isiflex Shower hose 160 cm (# 28276XXX)

Alternative sizes:

· Raindance Select S Shower set 120 3jet with shower bar 90 cm	Chrome	26322000	271.90
	White/Chrome	26322400	271.90
· Raindance Select S Shower set 120 3jet EcoSmart 9 l/min with shower bar 90 cm	Chrome	26323000	271.90
	White/Chrome	26323400	271.90

Water saving EcoSmart version:

· Raindance Select S Shower set 120 3jet EcoSmart 9 l/min with shower bar 65 cm	Chrome	26321000	261.00
	White/Chrome	26321400	261.00

Optional parts:

· Unica Grab handle Comfort with shelf and shower holder	White/Chrome	26328400	130.50
· Unica Foot support Comfort	Chrome	26329000	141.40
· AXOR Carlton Wall bar spacer 7 mm	Chrome	96380000	8.20

Croma Select E shower sets



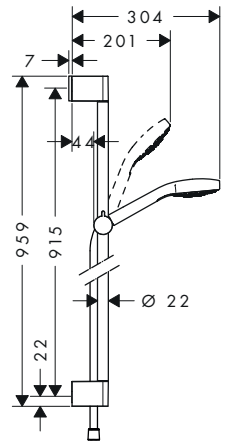

Croma Select E Shower set Multi with shower bar 90 cm

White/Chrome	26590400	123.40

Select · Quick Clean · XXL Performance

- consists of: hand shower, shower bar, shower hose, slider
- spray type: SoftRain, IntenseRain, Massage spray
- convenient diversion via Select button
- shower head size: 110 mm
- pivot connectors prevent hose from tangling
- slide inclination angle can be adjusted by 45°
- maximum flow rate at 0.3 MPa: 16 l/min
- chrome-plated wall supports of plastic

Consisting of:
- Croma Select E Hand shower Multi (# 26810400)
- Unica Shower bar Croma 90 cm (# 26506000)
- Isiflex Shower hose 160 cm (# 28276XXX)

Alternative sizes:

· Croma Select E Shower set Multi with shower bar 65 cm	White/Chrome	26580400	117.60

Water saving EcoSmart version:

· Croma Select E Shower set Multi EcoSmart 9 l/min with shower bar 90 cm	White/Chrome	26591400	123.40

Optional parts:

· Wall bar spacer	Chrome	97450000	8.00

Measurements within scale drawings are in mm.

Technical specifications and units of measure are subject to change.

	finish	code no.	Euro



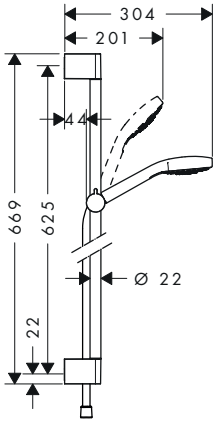

Croma Select E Shower set Multi with shower bar 65 cm
- consists of: hand shower, shower bar, shower hose, slider
- spray type: SoftRain, IntenseRain, Massage spray
- convenient diversion via Select button
- shower head size: 110 mm
- pivot connectors prevent hose from tangling
- slide inclination angle can be adjusted by 45°
- maximum flow rate at 0.3 MPa: 16 l/min
- chrome-plated wall supports of plastic

White/Chrome — 26580400 — 117.60

Select · Quick Clean · XXL Performance

Consisting of:
- Croma Select E Hand shower Multi (# 26810400)
- Unica Shower bar Croma 65 cm (# 26505000)
- Isiflex Shower hose 160 cm (# 28276XXX)

Alternative sizes:
- Croma Select E Shower set Multi with shower bar 90 cm — White/Chrome — 26590400 — 123.40

Water saving EcoSmart version:
- Croma Select E Shower set Multi EcoSmart 9 l/min with shower bar 65 cm — White/Chrome — 26581400 — 117.60

Optional parts:
- Wall bar spacer — Chrome — 97450000 — 8.00



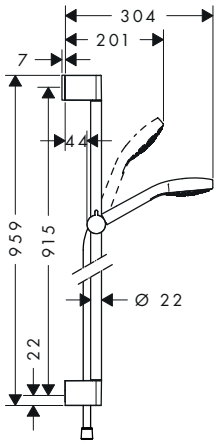

Croma Select E Shower set Vario with shower bar 90 cm
- consists of: hand shower, shower bar, shower hose, slider
- spray type: Rain, IntenseRain, TurboRain
- convenient diversion via Select button
- shower head size: 110 mm
- pivot connectors prevent hose from tangling
- slide inclination angle can be adjusted by 45°
- maximum flow rate at 0.3 MPa: 15 l/min
- chrome-plated wall supports of plastic

White/Chrome — 26592400 — 109.10

Select · Quick Clean · XXL Performance

Consisting of:
- Croma Select E Hand shower Vario (# 26812400)
- Unica Shower bar Croma 90 cm (# 26506000)
- Isiflex Shower hose 160 cm (# 28276XXX)

Alternative sizes:
- Croma Select E Shower set Vario with shower bar 65 cm — White/Chrome — 26582400 — 103.10

Water saving EcoSmart version:
- Croma Select E Shower set Vario EcoSmart 9 l/min with shower bar 90 cm — White/Chrome — 26593400 — 109.10

Optional parts:
- Wall bar spacer — Chrome — 97450000 — 8.00

Measurements within scale drawings are in mm.

Technical specifications and units of measure are subject to change.

	finish	code no.	Euro
Croma Select E Shower set Vario with shower bar 65 cm · consists of: hand shower, shower bar, shower hose, slider · spray type: Rain, IntenseRain, TurboRain · convenient diversion via Select button · shower head size: 110 mm · pivot connectors prevent hose from tangling · slide inclination angle can be adjusted by 45° · maximum flow rate at 0.3 MPa: 15 l/min · chrome-plated wall supports of plastic	White/Chrome	26582400	103.10
Consisting of: · Croma Select E Hand shower Vario (# 26812400) · Unica Shower bar Croma 65 cm (# 26505000) · Isiflex Shower hose 160 cm (# 28276XXX)			
Alternative sizes: · Croma Select E Shower set Vario with shower bar 90 cm	White/Chrome	26592400	109.10
Water saving EcoSmart version: · Croma Select E Shower set Vario EcoSmart 9 l/min with shower bar 65 cm	White/Chrome	26583400	103.10
Alternative products: · Croma Select E Shower set Vario with shower bar 65 cm and soap dish	White/Chrome	26586400	109.10
Optional parts: · Wall bar spacer	Chrome	97450000	8.00



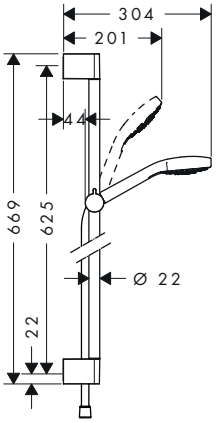

	finish	code no.	Euro
Croma Select E Shower set 1jet with shower bar 90 cm · consists of: hand shower, shower bar, shower hose, slider · spray type: Rain · shower head size: 110 mm · pivot connectors prevent hose from tangling · slide inclination angle can be adjusted by 45° · maximum flow rate at 0.3 MPa: 16 l/min · chrome-plated wall supports of plastic	White/Chrome	26594400	97.40
Consisting of: · Croma Select E Hand shower 1jet (# 26814400) · Unica Shower bar Croma 90 cm with shower hose (# 26504000) · Isiflex Shower hose 160 cm (# 28276XXX)			
Alternative sizes: · Croma Select E Shower set 1jet with shower bar 65 cm	White/Chrome	26584400	91.60
Water saving EcoSmart version: · Croma Select E Shower set 1jet EcoSmart 9 l/min with shower bar 90 cm	White/Chrome	26595400	97.40
Optional parts: · Wall bar spacer	Chrome	97450000	8.00



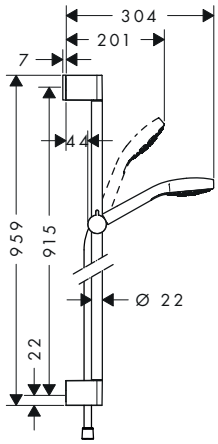

Measurements within scale drawings are in mm.

Technical specifications and units of measure are subject to change.

	finish	code no.	Euro



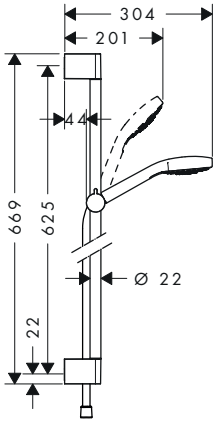

Croma Select E Shower set 1jet with shower bar 65 cm — White/Chrome — 26584400 — 91.60

Quick Clean · XXL Performance

- consists of: hand shower, shower bar, shower hose, slider
- spray type: Rain
- shower head size: 110 mm
- pivot connectors prevent hose from tangling
- slide inclination angle can be adjusted by 45°
- maximum flow rate at 0.3 MPa: 16 l/min
- chrome-plated wall supports of plastic

Consisting of:
- Croma Select E Hand shower 1jet (# 26814400)
- Unica Shower bar Croma 65 cm with shower hose (# 26503000)
- Isiflex Shower hose 160 cm (# 28276XXX)

Alternative sizes:
- Croma Select E Shower set 1jet with shower bar 90 cm — White/Chrome — 26594400 — 97.40

Water saving EcoSmart version:
- Croma Select E Shower set 1jet EcoSmart 9 l/min with shower bar 65 cm — White/Chrome — 26585400 — 91.60

Optional parts:
- Wall bar spacer — Chrome — 97450000 — 8.00



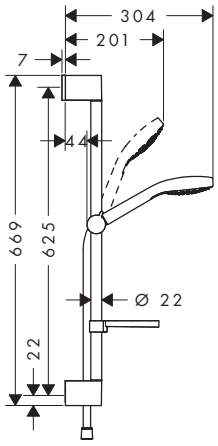

Croma Select E Shower set Vario with shower bar 65 cm and soap dish — White/Chrome — 26586400 — 109.10

Select · Quick Clean · XXL Performance

- consists of: hand shower, shower bar, shower hose, slider, soap dish
- spray type: Rain, IntenseRain, TurboRain
- convenient diversion via Select button
- shower head size: 110 mm
- pivot connectors prevent hose from tangling
- slide inclination angle can be adjusted by 45°
- maximum flow rate at 0.3 MPa: 15 l/min
- chrome-plated wall supports of plastic

Consisting of:
- Croma Select E Hand shower Vario (# 26812400)
- Unica Shower bar Croma 65 cm with shower hose (# 26503000)
- Isiflex Shower hose 160 cm (# 28276XXX)
- Casetta Soap dish E (# 26519000)

Alternative products:
- Croma Select E Shower set Vario with shower bar 65 cm — White/Chrome — 26582400 — 103.10

Optional parts:
- Wall bar spacer — Chrome — 97450000 — 8.00

Measurements within scale drawings are in mm.

Technical specifications and units of measure are subject to change.

Croma Select S shower sets



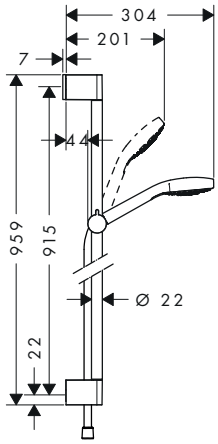

	finish	code no.	Euro
Croma Select S Shower set Multi with shower bar 90 cm · consists of: hand shower, shower bar, shower hose, slider · spray type: SoftRain, IntenseRain, Massage spray · convenient diversion via Select button · shower head size: 110 mm · pivot connectors prevent hose from tangling · slide inclination angle can be adjusted by 45° · maximum flow rate at 0.3 MPa: 16 l/min · chrome-plated wall supports of plastic	White/Chrome	26570400	123.40
Consisting of: · Croma Select S Hand shower Multi (# 26800400) · Unica Shower bar Croma 90 cm with shower hose (# 26504000) · Isiflex Shower hose 160 cm (# 28276XXX)			
Alternative sizes: · Croma Select S Shower set Multi with shower bar 65 cm	White/Chrome	26560400	117.60
Water saving EcoSmart version: · Croma Select S Shower set Multi EcoSmart 9 l/min with shower bar 90 cm	White/Chrome	26571400	123.40
Optional parts: · Wall bar spacer	Chrome	97450000	8.00



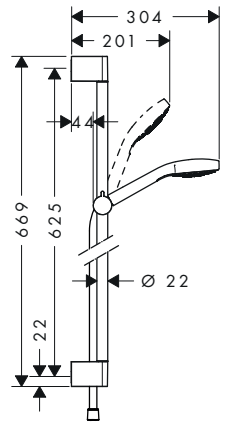

	finish	code no.	Euro
Croma Select S Shower set Multi with shower bar 65 cm · consists of: hand shower, shower bar, shower hose, slider · spray type: SoftRain, IntenseRain, Massage spray · convenient diversion via Select button · shower head size: 110 mm · pivot connectors prevent hose from tangling · slide inclination angle can be adjusted by 45° · maximum flow rate at 0.3 MPa: 16 l/min · chrome-plated wall supports of plastic	White/Chrome	26560400	117.60
Consisting of: · Croma Select S Hand shower Multi (# 26800400) · Unica Shower bar Croma 65 cm with shower hose (# 26503000) · Isiflex Shower hose 160 cm (# 28276XXX)			
Alternative sizes: · Croma Select S Shower set Multi with shower bar 90 cm	White/Chrome	26570400	123.40
Water saving EcoSmart version: · Croma Select S Shower set Multi EcoSmart 9 l/min with shower bar 65 cm	White/Chrome	26561400	117.60
Optional parts: · Wall bar spacer	Chrome	97450000	8.00

Measurements within scale drawings are in mm.

Technical specifications and units of measure are subject to change.

	finish	code no.	Euro



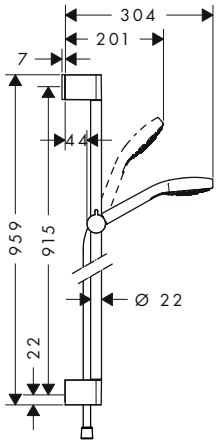

Croma Select S Shower set Vario with shower bar 90 cm
- consists of: hand shower, shower bar, shower hose, slider
- spray type: Rain, TurboRain, IntenseRain
- convenient diversion via Select button
- shower head size: 110 mm
- pivot connectors prevent hose from tangling
- slide inclination angle can be adjusted by 45°
- maximum flow rate at 0.3 MPa: 15 l/min
- chrome-plated wall supports of plastic

White/Chrome — 26572400 — 109.10

Consisting of:
- Croma Select S Hand shower Vario (# 26802400)
- Unica Shower bar Croma 90 cm with shower hose (# 26504000)
- Isiflex Shower hose 160 cm (# 28276XXX)

Alternative sizes:
- Croma Select S Shower set Vario with shower bar 65 cm — White/Chrome — 26562400 — 103.10

Water saving EcoSmart version:
- Croma Select S Shower set Vario EcoSmart 9 l/min with shower bar 90 cm — White/Chrome — 26573400 — 109.10

Optional parts:
- Wall bar spacer — Chrome — 97450000 — 8.00



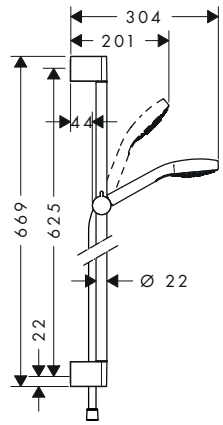

Croma Select S Shower set Vario with shower bar 65 cm
- consists of: hand shower, shower bar, shower hose, slider
- spray type: Rain, IntenseRain, TurboRain
- convenient diversion via Select button
- shower head size: 110 mm
- pivot connectors prevent hose from tangling
- slide inclination angle can be adjusted by 45°
- maximum flow rate at 0.3 MPa: 15 l/min
- chrome-plated wall supports of plastic

White/Chrome — 26562400 — 103.10

Consisting of:
- Croma Select S Hand shower Vario (# 26802400)
- Unica Shower bar Croma 65 cm with shower hose (# 26503000)
- Isiflex Shower hose 160 cm (# 28276XXX)

Alternative sizes:
- Croma Select S Shower set Vario with shower bar 90 cm — White/Chrome — 26572400 — 109.10

Water saving EcoSmart version:
- Croma Select S Shower set Vario EcoSmart 9 l/min with shower bar 65 cm — White/Chrome — 26563400 — 103.10

Alternative products:
- Croma Select S Shower set Vario with shower bar 65 cm and soap dish — White/Chrome — 26566400 — 109.10

Optional parts:
- Wall bar spacer — Chrome — 97450000 — 8.00

Measurements within scale drawings are in mm.

Technical specifications and units of measure are subject to change.

	finish	code no.	Euro
Croma Select S Shower set 1jet with shower bar 90 cm · consists of: hand shower, shower bar, shower hose, slider · spray type: Rain · shower head size: 110 mm · pivot connectors prevent hose from tangling · slide inclination angle can be adjusted by 45° · maximum flow rate at 0.3 MPa: 16 l/ min · chrome-plated wall supports of plastic	White/Chrome	26574400	97.40
Consisting of: · Croma Select S Hand shower 1jet (# 26804400) · Unica Shower bar Croma 90 cm with shower hose (# 26504000) · Isiflex Shower hose 160 cm (# 28276XXX)			
Alternative sizes: · Croma Select S Shower set 1jet with shower bar 65 cm	White/Chrome	26564400	91.60
Water saving EcoSmart version: · Croma Select S Shower set 1jet EcoSmart 9 l/ min with shower bar 90 cm	White/Chrome	26575400	97.40
Optional parts: · Wall bar spacer	Chrome	97450000	8.00



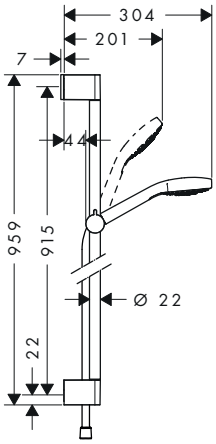

	finish	code no.	Euro
Croma Select S Shower set 1jet with shower bar 65 cm · consists of: hand shower, shower bar, shower hose, slider · spray type: Rain · shower head size: 110 mm · pivot connectors prevent hose from tangling · slide inclination angle can be adjusted by 45° · maximum flow rate at 0.3 MPa: 16 l/ min · chrome-plated wall supports of plastic	White/Chrome	26564400	91.60
Consisting of: · Croma Select S Hand shower 1jet (# 26804400) · Unica Shower bar Croma 65 cm with shower hose (# 26503000) · Isiflex Shower hose 160 cm (# 28276XXX)			
Alternative sizes: · Croma Select S Shower set 1jet with shower bar 90 cm	White/Chrome	26574400	97.40
Water saving EcoSmart version: · Croma Select S Shower set 1jet EcoSmart 9 l/ min with shower bar 65 cm	White/Chrome	26565400	91.60
Optional parts: · Wall bar spacer	Chrome	97450000	8.00



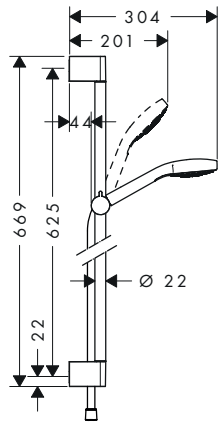

Measurements within scale drawings are in mm.

Technical specifications and units of measure are subject to change.

	finish	code no.	Euro



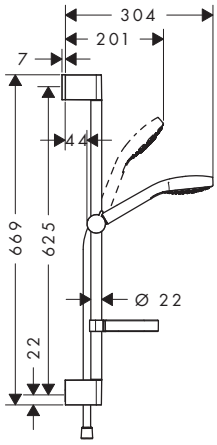

Croma Select S Shower set Vario with shower bar 65 cm and soap dish
- consists of: hand shower, shower bar, shower hose, slider, soap dish
- spray type: Rain, TurboRain, IntenseRain
- convenient diversion via Select button
- shower head size: 110 mm
- pivot connectors prevent hose from tangling
- slide inclination angle can be adjusted by 45°
- maximum flow rate at 0.3 MPa: 15 l/min
- chrome-plated wall supports of plastic

White/Chrome — 26566400 — 109.10

Select · Quick Clean · XXL Performance

Consisting of:
- Croma Select S Hand shower Vario (# 26802400)
- Unica Shower bar Croma 65 cm with shower hose (# 26503000)
- Isiflex Shower hose 160 cm (# 28276XXX)
- Casetta Soap dish C (# 28678000)

Alternative products:
- Croma Select S Shower set Vario with shower bar 65 cm — White/Chrome — 26562400 — 103.10

Optional parts:
- Wall bar spacer — Chrome — 97450000 — 8.00

PuraVida shower set



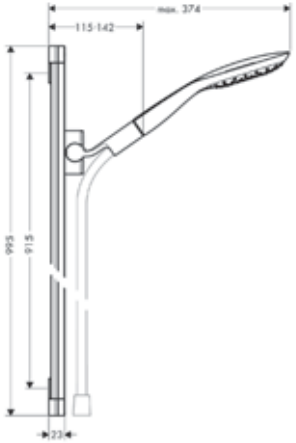

PuraVida Shower set with shower bar 90 cm
- consists of: hand shower, shower bar, shower hose, slider
- spray type: RainAir, CaresseAir, Mix
- convenient diversion via Select button
- shower head size: 150 mm
- pivot connectors prevent hose from tangling
- 90° position adjustable slider, pivots left and right, up and down
- maximum flow rate at 0.3 MPa: 16 l/min
- chrome-plated wall supports of plastic

Chrome — 27853000 — 409.90
White/Chrome — 27853400 — 409.90

Select · Air Power · Quick Clean · XXL Performance

Consisting of:
- PuraVida Hand shower 3jet (# 28557XXX)
- Unica Shower bar PuraVida 90 cm with shower hose (# 27844000)
- Isiflex Shower hose 160 cm (# 28276XXX)

Optional parts:
- Raindance Corner fitting set — 28694000 — 32.30
- Raindance Wall bar spacer — Chrome — 98993000 — 7.50

Measurements within scale drawings are in mm.

Technical specifications and units of measure are subject to change.

Raindance Classic shower sets

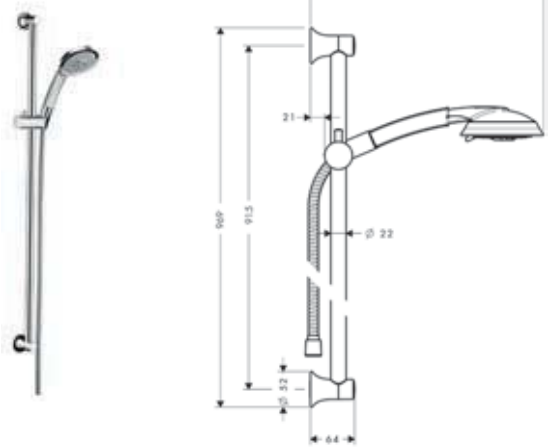

	finish	code no.	Euro
Raindance Classic Shower set 100 3jet with shower bar 90 cm · consists of: hand shower, shower bar, shower hose, slider · spray type: RainAir, Whirl, BalanceAir · spray type adjustment by turning spray disc · shower head size: 119 mm · pivot connectors prevent hose from tangling · 90° position adjustable slider, pivots left and right, up and down · maximum flow rate at 0.3 MPa: 17 l/min · chrome-plated wall supports of plastic	Chrome Chrome/Gold Optic	27841000 27841090	279.60 349.50
Consisting of: · Raindance Classic Hand shower 100 3jet (# 28548XXX) · Sensoflex Metal shower hose 160 cm (# 28136000)			
Alternative sizes: · Raindance Classic Shower set 100 3jet with shower bar 65 cm	Chrome Chrome/Gold Optic	27843000 27843090	272.40 340.60

Croma 100 shower sets

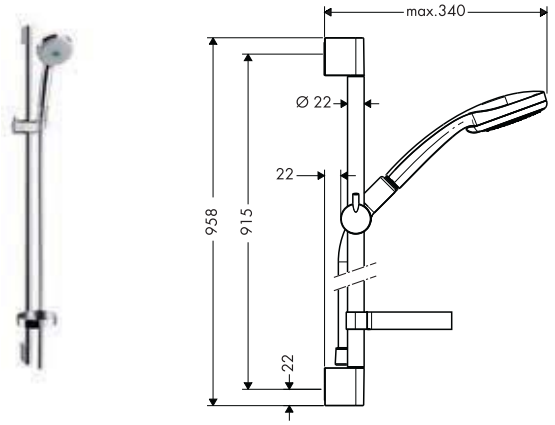

	finish	code no.	Euro
Croma 100 Shower set Multi with shower bar 90 cm and soap dish · consists of: hand shower, shower bar, shower hose, slider, soap dish · spray type: Rain, MonoRain, Massage spray · spray type adjustment by turning spray disc · shower head size: 100 mm · pivot connectors prevent hose from tangling · 90° position adjustable slider, pivots left and right, up and down · maximum flow rate at 0.3 MPa: 19 l/min · chrome-plated wall supports of plastic	Chrome	27774000	132.90
Consisting of: · Croma 100 Hand shower Multi (# 28536XXX) · Unica Shower bar C 90 cm with shower hose (# 27610000) · Isiflex Shower hose 160 cm (# 28276XXX) · Casetta Soap dish C (# 28678000)			
Alternative sizes: · Croma 100 Shower set Multi with shower bar 65 cm and soap dish	Chrome	27775000	124.80
Water saving EcoSmart version: · Croma 100 Shower set Multi EcoSmart 9 l/min with shower bar 90 cm and soap dish	Chrome	27655000	137.30
Optional parts: · Wall bar spacer	Chrome	97450000	8.00

Measurements within scale drawings are in mm.

Technical specifications and units of measure are subject to change.

	finish	code no.	Euro



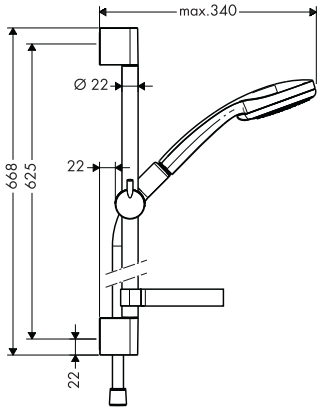

Croma 100 Shower set Multi with shower bar 65 cm and soap dish — Chrome — 27775000 — 124.80

Quick Clean · XXL Performance

- consists of: hand shower, shower bar, shower hose, slider, soap dish
- spray type: Rain, MonoRain, Massage spray
- spray type adjustment by turning spray disc
- shower head size: 100 mm
- pivot connectors prevent hose from tangling
- 90° position adjustable slider, pivots left and right, up and down
- maximum flow rate at 0.3 MPa: 19 l/min
- chrome-plated wall supports of plastic

Consisting of:
- Croma 100 Hand shower Multi (# 28536XXX)
- Unica Shower bar C 65 cm with shower hose (# 27611000)
- Isiflex Shower hose 160 cm (# 28276XXX)
- Casetta Soap dish C (# 28678000)

Alternative sizes:
- Croma 100 Shower set Multi with shower bar 90 cm and soap dish — Chrome — 27774000 — 132.90

Optional parts:
- Wall bar spacer — Chrome — 97450000 — 8.00



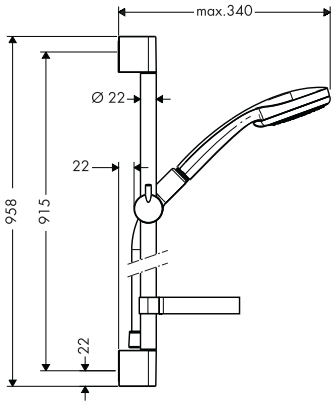

Croma 100 Shower set Vario with shower bar 90 cm and soap dish — Chrome — 27771000 — 106.40

Quick Clean · XXL Performance

- consists of: hand shower, shower bar, shower hose, slider, soap dish
- spray type: Rain, Shampoo spray, normal spray, Massage spray
- spray type adjustment by turning spray disc
- shower head size: 100 mm
- pivot connectors prevent hose from tangling
- 90° position adjustable slider, pivots left and right, up and down
- maximum flow rate at 0.3 MPa: 18 l/min
- chrome-plated wall supports of plastic

Consisting of:
- Croma 100 Hand shower Vario (# 28535000)
- Unica Shower bar C 90 cm with shower hose (# 27610000)
- Isiflex Shower hose 160 cm (# 28276XXX)
- Casetta Soap dish C (# 28678000)

Alternative sizes:
- Croma 100 Shower set Vario with shower bar 65 cm and soap dish — Chrome — 27772000 — 98.10

Water saving EcoSmart version:
- Croma 100 Shower set Vario EcoSmart 9 l/min with shower bar 90 cm and soap dish — Chrome — 27653000 — 110.80

Optional parts:
- Wall bar spacer — Chrome — 97450000 — 8.00

Measurements within scale drawings are in mm.

Technical specifications and units of measure are subject to change.

	finish	code no.	Euro



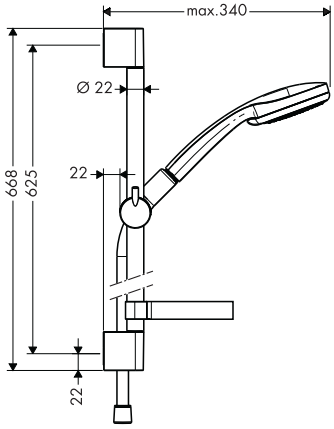

Croma 100 Shower set Vario with shower bar 65 cm and soap dish — Chrome — 27772000 — 98.10

Quick Clean · XXL Performance

- consists of: hand shower, shower bar, shower hose, slider, soap dish
- spray type: Rain, Shampoo spray, normal spray, Massage spray
- spray type adjustment by turning spray disc
- shower head size: 100 mm
- pivot connectors prevent hose from tangling
- 90° position adjustable slider, pivots left and right, up and down
- maximum flow rate at 0.3 MPa: 18 l/min
- chrome-plated wall supports of plastic

Consisting of:
- Croma 100 Hand shower Vario (# 28535000)
- Unica Shower bar C 65 cm with shower hose (# 27611000)
- Isiflex Shower hose 160 cm (# 28276XXX)
- Casetta Soap dish C (# 28678000)

Alternative sizes:
- Croma 100 Shower set Vario with shower bar 90 cm and soap dish — Chrome — 27771000 — 106.40

Water saving EcoSmart version:
- Croma 100 Shower set Vario EcoSmart 9 l/min with shower bar 65 cm and soap dish — Chrome — 27776000 — 107.30

Optional parts:
- Wall bar spacer — Chrome — 97450000 — 8.00



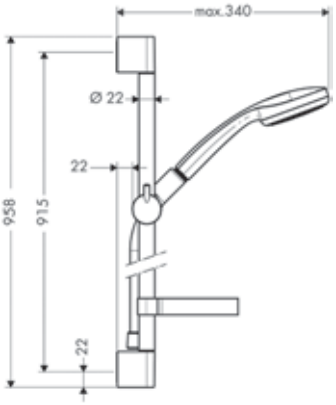

Croma 100 Shower set Mono with shower bar 90 cm and soap dish — Chrome — 27724000 — 92.40

Quick Clean · XXL Performance

- consists of: hand shower, shower bar, shower hose, slider, soap dish
- spray type: Rain
- shower head size: 100 mm
- pivot connectors prevent hose from tangling
- 90° position adjustable slider, pivots left and right, up and down
- maximum flow rate at 0.3 MPa: 16 l/min
- chrome-plated wall supports of plastic

Consisting of:
- Croma 100 Hand shower Mono (# 28580000)
- Unica Shower bar C 90 cm with shower hose (# 27610000)
- Isiflex Shower hose 160 cm (# 28276XXX)
- Casetta Soap dish C (# 28678000)

Alternative sizes:
- Croma 100 Shower set Mono with shower bar 65 cm and soap dish — Chrome — 27717000 — 85.10

Optional parts:
- Wall bar spacer — Chrome — 97450000 — 8.00

Measurements within scale drawings are in mm.

Technical specifications and units of measure are subject to change.

	finish	code no.	Euro
Croma 100 Shower set Mono with shower bar 65 cm and soap dish · consists of: hand shower, shower bar, shower hose, slider, soap dish · spray type: Rain · shower head size: 100 mm · pivot connectors prevent hose from tangling · 90° position adjustable slider, pivots left and right, up and down · maximum flow rate at 0.3 MPa: 16 l/min · chrome-plated wall supports of plastic	Chrome	27717000	85.10
Consisting of: · Croma 100 Hand shower Mono (# 28580000) · Unica Shower bar C 65 cm with shower hose (# 27611000) · Isiflex Shower hose 160 cm (# 28276XXX) · Casetta Soap dish C (# 28678000)			
Alternative sizes: · Croma 100 Shower set Mono with shower bar 90 cm and soap dish	Chrome	27724000	92.40
Water saving EcoSmart version: · Croma 100 Shower set Mono EcoSmart 9 l/min with shower bar 65 cm and soap dish	Chrome	27742000	85.10
Optional parts: · Wall bar spacer	Chrome	97450000	8.00



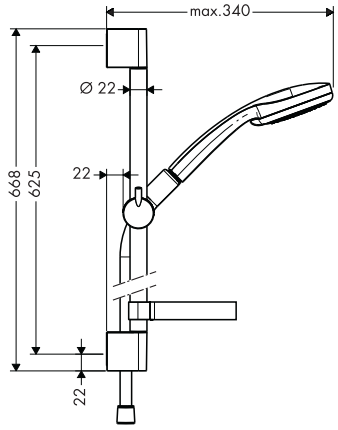

Croma 100 Shower set Multi with shower bar Unica'Reno Lift 105 cm · consists of: hand shower, shower bar, shower hose, slider · spray type: Rain, Massage spray, MonoRain · spray type adjustment by turning spray disc · shower head size: 100 mm · pivot connectors prevent hose from tangling · 90° position adjustable slider, pivots left and right, up and down · maximum flow rate at 0.3 MPa: 19 l/min · chrome-plated wall supports of plastic	Chrome	27791000	184.60
Consisting of: · Croma 100 Hand shower Multi (# 28536XXX) · Isiflex Shower hose 200 cm (# 28274000)			



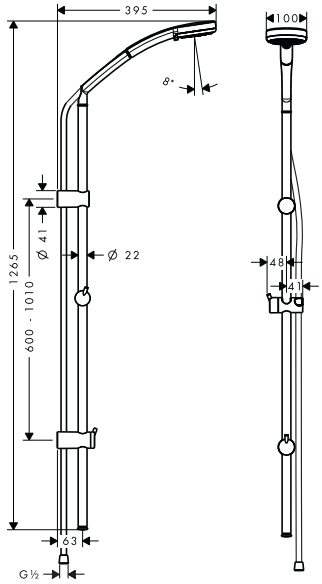

Measurements within scale drawings are in mm.

Technical specifications and units of measure are subject to change.

Crometta 100 shower sets

	finish	code no.	Euro
Crometta 100 Shower set Multi with shower bar 90 cm · consists of: hand shower, shower bar, shower hose, slider · spray type: Rain, TurboRain, Massage spray · spray type adjustment by turning spray disc · shower head size: 100 mm · without pivot joints · slide inclination angle can be adjusted by 45° · maximum flow rate at 0.3 MPa: 19 l/min · chrome-plated wall supports of plastic	White/Chrome	26656400	90.50
Consisting of: · Crometta 100 Hand shower Multi (# 26823400) · Unica Shower bar Croma 90 cm with shower hose (# 26504000) · Metaflex Shower hose 160 cm (# 28266000)			
Alternative sizes: · Crometta 100 Shower set Multi with shower bar 65 cm	White/Chrome	26650400	84.80
Optional parts: · Wall bar spacer	Chrome	97450000	8.00



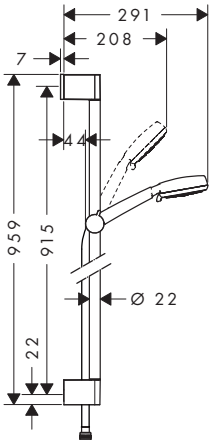

	finish	code no.	Euro
Crometta 100 Shower set Multi with shower bar 65 cm · consists of: hand shower, shower bar, shower hose, slider · spray type: Rain, TurboRain, Massage spray · spray type adjustment by turning spray disc · without pivot joints · slide inclination angle can be adjusted by 45° · maximum flow rate at 0.3 MPa: 19 l/min · chrome-plated wall supports of plastic	White/Chrome	26650400	84.80
Consisting of: · Crometta 100 Hand shower Multi (# 26823400) · Unica Shower bar Croma 65 cm with shower hose (# 26503000) · Metaflex Shower hose 160 cm (# 28266000)			
Alternative sizes: · Crometta 100 Shower set Multi with shower bar 90 cm	White/Chrome	26656400	90.50
Optional parts: · Wall bar spacer	Chrome	97450000	8.00



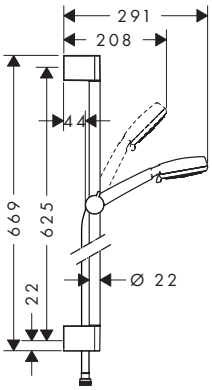

Measurements within scale drawings are in mm.

Technical specifications and units of measure are subject to change.

	finish	code no.	Euro



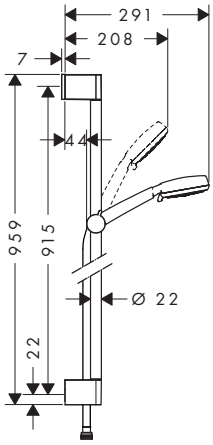

Crometta 100 Shower set Vario with shower bar 90 cm — White/Chrome — 26657400 — 82.40

Quick Clean · XXL Performance

- consists of: hand shower, shower bar, shower hose, slider
- spray type: Rain, normal spray, Shampoo spray, Massage spray
- spray type adjustment by turning spray disc
- shower head size: 100 mm
- without pivot joints
- slide inclination angle can be adjusted by 45°
- maximum flow rate at 0.3 MPa: 18 l/min
- chrome-plated wall supports of plastic

Consisting of:
- Crometta 100 Hand shower Vario (# 26824400)
- Unica Shower bar Croma 90 cm with shower hose (# 26504000)
- Metaflex Shower hose 160 cm (# 28266000)

Alternative sizes:
- Crometta 100 Shower set Vario with shower bar 65 cm — White/Chrome — 26651400 — 76.80

Optional parts:
- Wall bar spacer — Chrome — 97450000 — 8.00



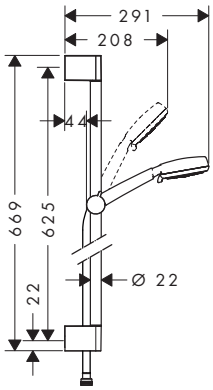

Crometta 100 Shower set Vario with shower bar 65 cm — White/Chrome — 26651400 — 76.80

Quick Clean · XXL Performance

- consists of: hand shower, shower bar, shower hose, slider
- spray type: Rain, normal spray, Shampoo spray, Massage spray
- spray type adjustment by turning spray disc
- shower head size: 100 mm
- without pivot joints
- slide inclination angle can be adjusted by 45°
- maximum flow rate at 0.3 MPa: 18 l/min
- chrome-plated wall supports of plastic

Consisting of:
- Crometta 100 Hand shower Vario (# 26824400)
- Unica Shower bar Croma 65 cm with shower hose (# 26503000)
- Metaflex Shower hose 160 cm (# 28266000)

Alternative sizes:
- Crometta 100 Shower set Vario with shower bar 90 cm — White/Chrome — 26657400 — 82.40

Water saving EcoSmart version:
- Crometta 100 Shower set Vario EcoSmart 9 l/min with shower bar 65 cm — White/Chrome — 26654400 — 76.80

Optional parts:
- Wall bar spacer — Chrome — 97450000 — 8.00

Measurements within scale drawings are in mm.

	finish	code no.	Euro



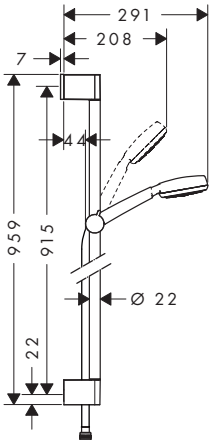

Crometta 100 Shower set 1jet with shower bar 90 cm — White/Chrome — 26658400 — 76.60

Quick Clean · XXL Performance

- consists of: hand shower, shower bar, shower hose, slider
- spray type: Rain
- shower head size: 100 mm
- without pivot joints
- slide inclination angle can be adjusted by 45°
- maximum flow rate at 0.3 MPa: 16 l/min
- chrome-plated wall supports of plastic

Consisting of:
- Crometta 100 Hand shower 1jet (# 26825400)
- Unica Shower bar Croma 90 cm with shower hose (# 26504000)
- Metaflex Shower hose 160 cm (# 28266000)

Alternative sizes:
- Crometta 100 Shower set 1jet with shower bar 65 cm — White/Chrome — 26652400 — 70.80

Optional parts:
- Wall bar spacer — Chrome — 97450000 — 8.00



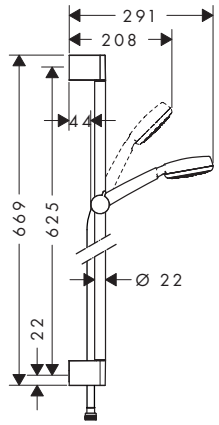

Crometta 100 Shower set 1jet with shower bar 65 cm — White/Chrome — 26652400 — 70.80

Quick Clean · XXL Performance

- consists of: hand shower, shower bar, shower hose, slider
- spray type: Rain
- shower head size: 100 mm
- without pivot joints
- slide inclination angle can be adjusted by 45°
- maximum flow rate at 0.3 MPa: 16 l/min
- chrome-plated wall supports of plastic

Consisting of:
- Crometta 100 Hand shower 1jet (# 26825400)
- Unica Shower bar Croma 65 cm with shower hose (# 26503000)
- Metaflex Shower hose 160 cm (# 28266000)

Alternative sizes:
- Crometta 100 Shower set 1jet with shower bar 90 cm — White/Chrome — 26658400 — 76.60

Water saving EcoSmart version:
- Crometta 100 Shower set 1jet EcoSmart 9 l/min with shower bar 65 cm — White/Chrome — 26655400 — 70.80

Optional parts:
- Wall bar spacer — Chrome — 97450000 — 8.00

Measurements within scale drawings are in mm.

Technical specifications and units of measure are subject to change.

Crometta shower sets



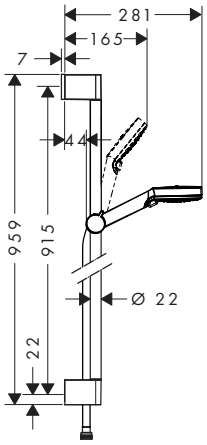

	finish	code no.	Euro
Crometta Shower set Vario with shower bar 90 cm · consists of: hand shower, shower bar, shower hose, slider · spray type: Rain, IntenseRain · spray type adjustment by turning spray disc · shower head size: 100 mm · pivot connectors prevent hose from tangling · slide inclination angle can be adjusted by 45° · fully chrome-plated shower slide · maximum flow rate at 0.3 MPa: 14 l/min · bar width: 22 mm · chrome-plated wall supports of plastic	White/Chrome	26536400	53.20
Consisting of: · Crometta Hand shower Vario (# 26330400) · Unica Shower bar Croma 90 cm (# 26506000) · Comfortflex Shower hose 160 cm (# 28168000)			
Alternative sizes: · Crometta Shower set Vario with shower bar 65 cm	White/Chrome	26532400	47.60
Water saving EcoSmart version: · Crometta Shower set Vario EcoSmart 9 l/min with shower bar 90 cm	White/Chrome	26538400	55.20
Optional parts: · Wall bar spacer	Chrome	97450000	8.00

Measurements within scale drawings are in mm.

	finish	code no.	Euro



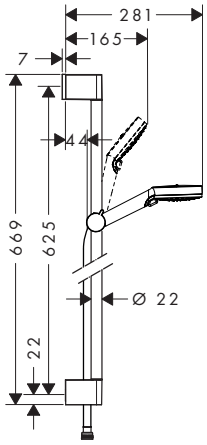

Crometta Shower set Vario with shower bar 65 cm
- consists of: hand shower, shower bar, shower hose, slider
- spray type: Rain, IntenseRain
- spray type adjustment by turning spray disc
- shower head size: 100 mm
- pivot connectors prevent hose from tangling
- slide inclination angle can be adjusted by 45°
- fully chrome-plated shower slide
- maximum flow rate at 0.3 MPa: 14 l/ min
- bar width: 22 mm
- chrome-plated wall supports of plastic

White/Chrome | 26532400 | 47.60

Quick Clean | XXL Performance

Consisting of:
- Crometta Hand shower Vario (# 26330400)
- Unica Shower bar Croma 65 cm (# 26505000)
- Comfortflex Shower hose 160 cm (# 28168000)

Alternative sizes:
- Crometta Shower set Vario with shower bar 90 cm — White/Chrome | 26536400 | 53.20

Water saving EcoSmart version:
- Crometta Shower set Vario EcoSmart 9 l/ min with shower bar 65 cm — White/Chrome | 26534400 | 49.90
- Crometta Shower set Vario Green 6 l/ min with shower bar 65 cm — White/Chrome | 26555400 | 49.90

Alternative products:
- Crometta Shower set Vario with shower bar 65 cm and soap dish — White/Chrome | 26553400 | 53.20

Optional parts:
- Wall bar spacer — Chrome | 97450000 | 8.00



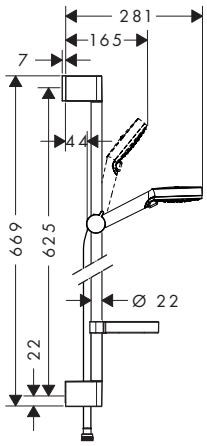

Crometta Shower set Vario with shower bar 65 cm and soap dish
- consists of: hand shower, shower bar, shower hose, slider, soap dish
- spray type: Rain, IntenseRain
- spray type adjustment by turning spray disc
- shower head size: 100 mm
- pivot connectors prevent hose from tangling
- slide inclination angle can be adjusted by 45°
- maximum flow rate at 0.3 MPa: 14 l/ min
- bar width: 22 mm
- chrome-plated wall supports of plastic

White/Chrome | 26553400 | 53.20

Quick Clean | XXL Performance

Consisting of:
- Unica Shower bar Croma 65 cm (# 26505000)
- Crometta Hand shower Vario (# 26330400)
- Casetta Soap dish C (# 28678000)
- Comfortflex Shower hose 160 cm (# 28168000)

Alternative products:
- Crometta Shower set Vario with shower bar 65 cm — White/Chrome | 26532400 | 47.60

Optional parts:
- Wall bar spacer — Chrome | 97450000 | 8.00

Measurements within scale drawings are in mm.

Technical specifications and units of measure are subject to change.

	finish	code no.	Euro



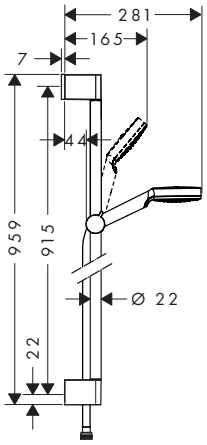

Crometta Shower set 1jet with shower bar 90 cm — White/Chrome — 26537400 — 50.90

Quick Clean · XXL Performance

- consists of: hand shower, shower bar, shower hose, slider
- spray type: Rain
- shower head size: 100 mm
- pivot connectors prevent hose from tangling
- slide inclination angle can be adjusted by 45°
- fully chrome-plated shower slide
- maximum flow rate at 0.3 MPa: 14 l/min
- bar width: 22 mm
- chrome-plated wall supports of plastic

Consisting of:
- Crometta Hand shower 1jet (# 26331400)
- Unica Shower bar Croma 90 cm (# 26506000)
- Comfortflex Shower hose 160 cm (# 28168000)

Alternative sizes:
- Crometta Shower set 1jet with shower bar 65 cm — White/Chrome — 26533400 — 45.50

Water saving EcoSmart version:
- Crometta Shower set 1jet EcoSmart 9 l/min with shower bar 90 cm — White/Chrome — 26539400 — 53.20

Optional parts:
- Wall bar spacer — Chrome — 97450000 — 8.00



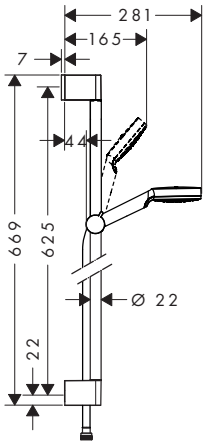

Crometta Shower set 1jet with shower bar 65 cm — White/Chrome — 26533400 — 45.50

Quick Clean · XXL Performance

- consists of: hand shower, shower bar, shower hose, slider
- spray type: Rain
- shower head size: 100 mm
- pivot connectors prevent hose from tangling
- slide inclination angle can be adjusted by 45°
- fully chrome-plated shower slide
- maximum flow rate at 0.3 MPa: 14 l/min
- bar width: 22 mm
- chrome-plated wall supports of plastic

Consisting of:
- Crometta Hand shower 1jet (# 26331400)
- Unica Shower bar Croma 65 cm (# 26505000)
- Comfortflex Shower hose 160 cm (# 28168000)

Alternative sizes:
- Crometta Shower set 1jet with shower bar 90 cm — White/Chrome — 26537400 — 50.90

Water saving EcoSmart version:
- Crometta Shower set 1jet EcoSmart 9 l/min with shower bar 65 cm — White/Chrome — 26535400 — 47.60
- Crometta Shower set 1jet Green 6 l/min with shower bar 65 cm — White/Chrome — 26554400 — 47.60

Optional parts:
- Wall bar spacer — Chrome — 97450000 — 8.00

Measurements within scale drawings are in mm.

Technical specifications and units of measure are subject to change.

Crometta 85 shower sets

	finish	code no.	Euro
 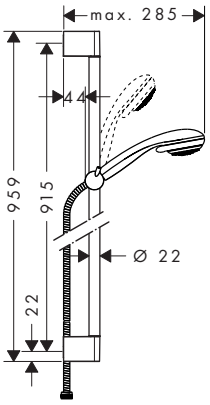			
Crometta 85 Shower set Multi with shower bar 90 cm · consists of: hand shower, shower bar, shower hose, slider · spray type: Massage spray, MonoRain, normal spray · spray type adjustment by turning spray disc · shower head size: 85 mm · without pivot joints · 90° position adjustable slider, pivots left and right, up and down · maximum flow rate at 0.3 MPa: 16 l/min · chrome-plated wall supports of plastic	Chrome	27766000	74.20 Quick Clean
Consisting of: · Crometta 85 Hand shower Multi (# 28563000) · Unica Shower bar Crometta 90 cm with shower hose (# 27614000) · Metaflex Shower hose 160 cm (# 28266000)			
Alternative sizes:			
· Crometta 85 Shower set Multi with shower bar 65 cm	Chrome	27767000	70.90
Optional parts:			
· Casetta Soap dish C	Chrome	28678000	14.50
· Wall bar spacer	Chrome	97450000	8.00

	finish	code no.	Euro
 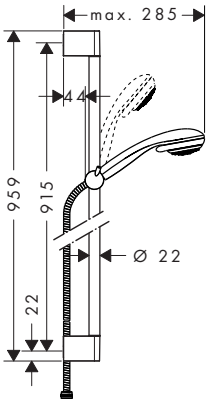			
Crometta 85 Shower set Vario with shower bar 90 cm · consists of: hand shower, shower bar, shower hose, slider · spray type: normal spray, Vario spray · spray type adjustment by turning spray disc · shower head size: 85 mm · without pivot joints · 90° position adjustable slider, pivots left and right, up and down · maximum flow rate at 0.3 MPa: 17 l/min · chrome-plated wall supports of plastic	Chrome	27762000	60.00 Quick Clean
Consisting of: · Crometta 85 Hand shower Vario (# 28562000) · Unica Shower bar Crometta 90 cm with shower hose (# 27614000) · Metaflex Shower hose 160 cm (# 28266000)			
Alternative sizes:			
· Crometta 85 Shower set Vario with shower bar 65 cm	Chrome	27763000	56.50
Optional parts:			
· Casetta Soap dish C	Chrome	28678000	14.50
· Wall bar spacer	Chrome	97450000	8.00

Measurements within scale drawings are in mm.

Technical specifications and units of measure are subject to change.

	finish	code no.	Euro
Crometta 85 Shower set Vario with shower bar 65 cm and soap dish · consists of: hand shower, shower bar, shower hose, slider, soap dish · spray type: normal spray, Vario spray · spray type adjustment by turning spray disc · shower head size: 85 mm · without pivot joints · 90° position adjustable slider, pivots left and right, up and down · maximum flow rate at 0.3 MPa: 17 l/min · chrome-plated wall supports of plastic	Chrome	27764000	62.50
Consisting of: · Crometta 85 Hand shower Vario (# 28562000) · Unica Shower bar Crometta 65 cm with shower hose (# 27615000) · Metaflex Shower hose 160 cm (# 28266000) · Casetta Soap dish S (# 28684000)			
Optional parts:			
· Wall bar spacer	Chrome	97450000	8.00



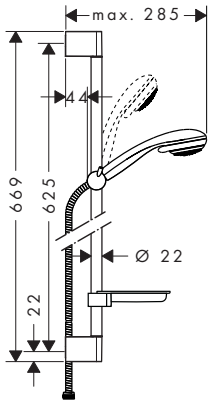

	finish	code no.	Euro
Crometta 85 Shower set Mono with shower bar 90 cm · consists of: hand shower, shower bar, shower hose, slider · spray type: normal spray · shower head size: 85 mm · without pivot joints · 90° position adjustable slider, pivots left and right, up and down · maximum flow rate at 0.3 MPa: 16 l/min · chrome-plated wall supports of plastic	Chrome	27729000	58.80
Consisting of: · Crometta 85 Hand shower Mono (# 28585000) · Unica Shower bar Crometta 90 cm with shower hose (# 27614000) · Metaflex Shower hose 160 cm (# 28266000)			
Alternative sizes:			
· Crometta 85 Shower set Mono with shower bar 65 cm	Chrome	27728000	55.80
Optional parts:			
· Wall bar spacer	Chrome	97450000	8.00
· Casetta Soap dish C	Chrome	28678000	14.50



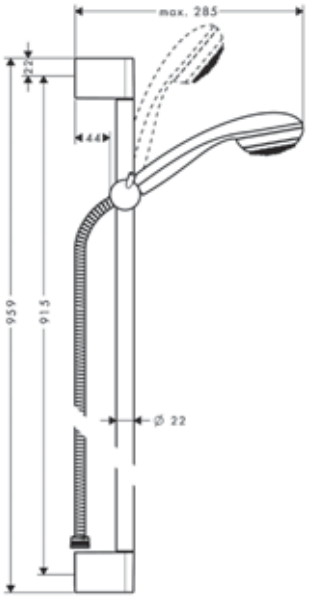

Measurements within scale drawings are in mm.

Technical specifications and units of measure are subject to change.

	finish	code no.	Euro
Crometta 85 Shower set Mono Green 6 l/min with shower bar 90 cm · consists of: hand shower, shower bar, shower hose, slider · spray type: normal spray · shower head size: 85 mm · without pivot joints · 90° position adjustable slider, pivots left and right, up and down · maximum flow rate at 0.3 MPa: 5.7 l/min · chrome-plated wall supports of plastic	Chrome	27651000	67.90
Consisting of: · Crometta 85 Hand shower Mono Green 6 l/min (# 28561000) · Unica Shower bar Crometta 90 cm with shower hose (# 27614000) · Metaflex Shower hose 160 cm (# 28266000)			
Alternative sizes:			
· Crometta 85 Shower set Mono Green 6 l/min with shower bar 65 cm	Chrome	27652000	64.30
Optional parts:			
· Wall bar spacer	Chrome	97450000	8.00
· Casetta Soap dish C	Chrome	28678000	14.50

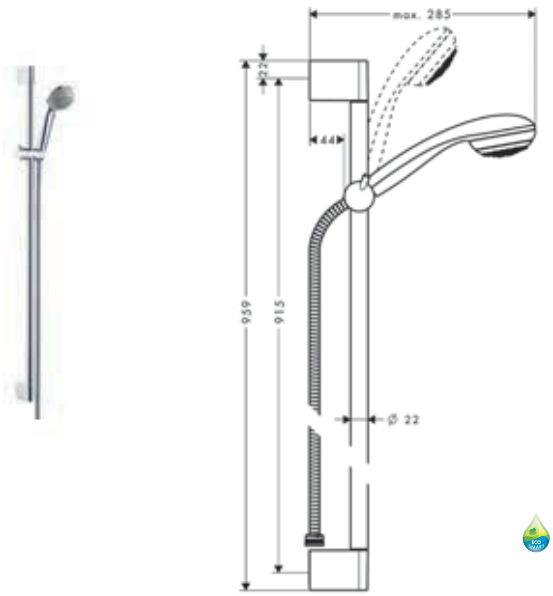

Raindance Select E shower sets with thermostatic mixer for exposed installation

Raindance Select E Shower system for exposed installation 120 with Ecostat Select thermostat and shower bar 90 cm · consists of: hand shower, shower thermostat, shower bar, slider, soap dish, shower hose · spray type: Rain, RainAir, Whirl · convenient diversion via Select button · pivot connectors prevent hose from tangling · 90° position adjustable slider, pivots left and right, up and down · maximum flow rate at 0.3 MPa: 15 l/min · in case of installation on existing G ¾ connections, adaptor # 02026000 must be used	Chrome White/Chrome	27039000 27039400	469.60 469.60
Consisting of: · Ecostat Select Shower thermostat for exposed installation (# 13161XXX) · Raindance Select E Shower set 120 3jet with shower bar 90 cm and soap dish (# 26621XXX)			
Alternative sizes:			
· Raindance Select E Shower system for exposed installation 120 with Ecostat Select thermostat and shower bar 65 cm	Chrome White/Chrome	27038000 27038400	462.40 462.40
Optional parts:			
· S-connections adapter G ¾ for renovation	Chrome	02026000	29.70



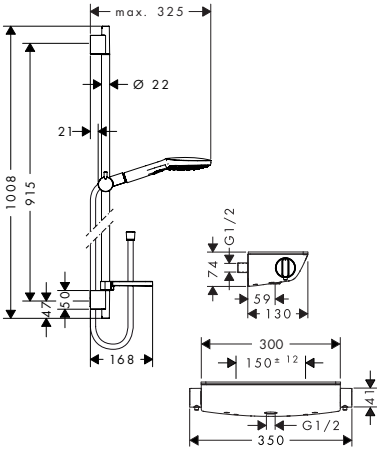

Raindance Select S shower sets with thermostatic mixer for exposed installation



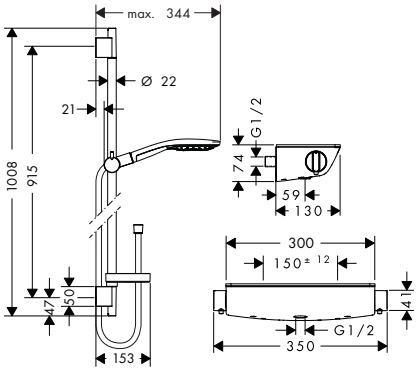

	finish	code no.	Euro
Raindance Select S Shower system for exposed installation 150 with Ecostat Select thermostat and shower bar 90 cm	Chrome	27037000	515.80
· consists of: hand shower, shower thermostat, shower bar, slider, soap dish, shower hose	White/Chrome	27037400	515.80
· spray type: RainAir, CaresseAir, Mix			
· convenient diversion via Select button			
· pivot connectors prevent hose from tangling			
· 90° position adjustable slider, pivots left and right, up and down			
· maximum flow rate at 0.3 MPa: 16 l/min			
· in case of installation on existing G ¾ connections, adaptor # 02026000 must be used			
Consisting of:			
· Ecostat Select Shower thermostat for exposed installation (# 13161XXX)			
· Raindance Select S Shower set 150 3jet with shower bar 90 cm and soap dish (# 27803XXX)			
Alternative sizes:			
· Raindance Select S Shower system for exposed installation 150 with Ecostat Select thermostat and shower bar 65 cm	Chrome	27036000	508.50
	White/Chrome	27036400	508.50
Optional parts:			
· S-connections adapter G ¾ for renovation	Chrome	02026000	29.70

Croma Select E shower sets with thermostatic mixer for exposed installation

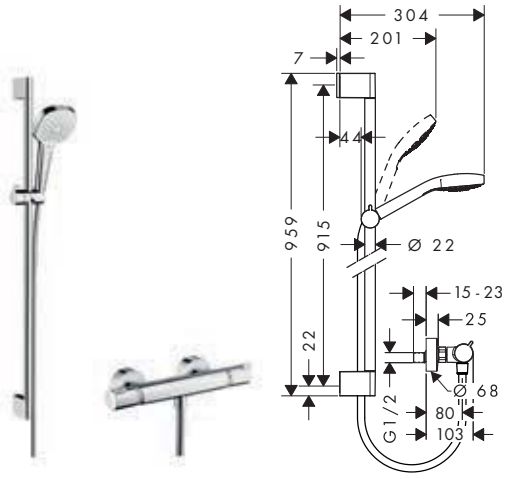

	finish	code no.	Euro
Croma Select E Shower system for exposed installation Vario with Ecostat Comfort thermostat and shower bar 90 cm	White/Chrome	27082400	272.40
· consists of: hand shower, shower thermostat, shower bar, slider, shower hose			
· spray type: Rain, TurboRain, IntenseRain			
· convenient diversion via Select button			
· pivot connectors prevent hose from tangling			
· slide inclination angle can be adjusted by 45°			
· maximum flow rate at 0.3 MPa: 15 l/min			
Consisting of:			
· Croma Select E Shower set Vario with shower bar 90 cm (# 26592400)			
· Ecostat Shower thermostat Comfort for exposed installation (# 13116XXX)			
Alternative sizes:			
· Croma Select E Shower system for exposed installation Vario with Ecostat Comfort thermostat and shower bar 65 cm	White/Chrome	27081400	266.70

Measurements within scale drawings are in mm.

Croma Select S shower sets with thermostatic mixer for exposed installation

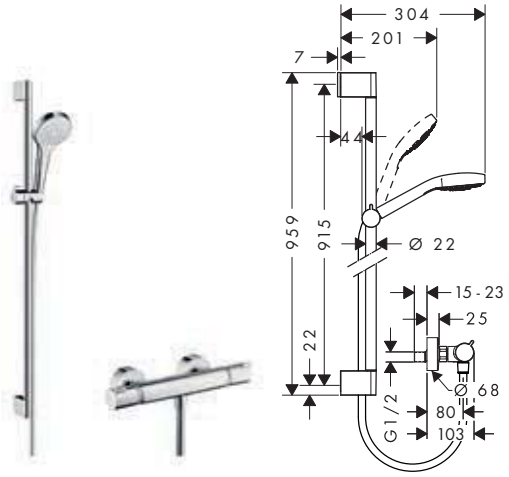

	finish	code no.	Euro
Croma Select S Shower system for exposed installation Vario with Ecostat Comfort thermostat and shower bar 90 cm · consists of: hand shower, shower thermostat, shower bar, slider, shower hose · spray type: Rain, TurboRain, IntenseRain · convenient diversion via Select button · pivot connectors prevent hose from tangling · slide inclination angle can be adjusted by 45° · maximum flow rate at 0.3 MPa: 15 l/min	White/Chrome	27014400	272.40
Consisting of: · Croma Select S Shower set Vario with shower bar 90 cm (# 26572400) · Ecostat Shower thermostat Comfort for exposed installation (# 13116XXX)			
Alternative sizes: · Croma Select S Shower system for exposed installation Vario with Ecostat Comfort thermostat and shower bar 65 cm	White/Chrome	27013400	266.70

Croma 100 shower sets with thermostatic mixer for exposed installation



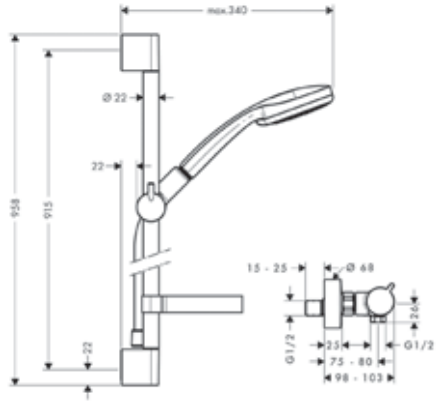

	finish	code no.	Euro
Croma 100 Shower system for exposed installation Vario with Ecostat Comfort thermostat and shower bar 90 cm · consists of: hand shower, shower thermostat, shower bar, slider, soap dish, shower hose · spray type: normal spray, Rain, Massage spray, Shampoo spray · spray type adjustment by turning spray disc · pivot connectors prevent hose from tangling · 90° position adjustable slider, pivots left and right, up and down · maximum flow rate at 0.3 MPa: 18 l/min	Chrome	27035000	308.40
Consisting of: · Croma 100 Shower set Vario with shower bar 90 cm and soap dish (# 27771000) · Ecostat Shower thermostat Comfort for exposed installation (# 13116XXX)			
Alternative sizes: · Croma 100 Shower system for exposed installation Vario with Ecostat Comfort thermostat and shower bar 65 cm	Chrome	27034000	301.80
Water saving EcoSmart version: · Croma 100 Shower system for exposed installation Vario EcoSmart 9 l/min with Ecostat Comfort thermostat and shower bar 90 cm	Chrome	27033000	313.70
Optional parts: · Wall bar spacer	Chrome	97450000	8.00

Measurements within scale drawings are in mm.

Technical specifications and units of measure are subject to change.

	finish	code no.	Euro



Croma 100 Shower system for exposed installation Vario with Ecostat Comfort thermostat and shower bar 65 cm
- consists of: hand shower, shower thermostat, shower bar, slider, soap dish, shower hose
- spray type: normal spray, Rain, Massage spray, Shampoo spray
- spray type adjustment by turning spray disc
- pivot connectors prevent hose from tangling
- 90° position adjustable slider, pivots left and right, up and down
- maximum flow rate at 0.3 MPa: 18 l/min

Chrome | 27034000 | 301.80

Quick Clean | XXL Performance

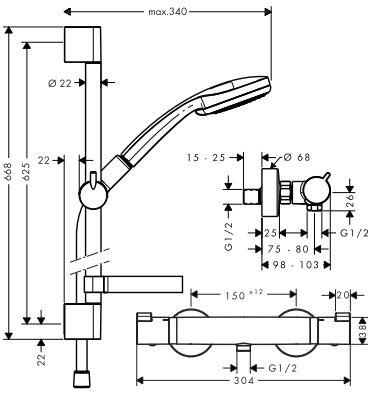

Consisting of:
- Croma 100 Shower set Vario with shower bar 65 cm and soap dish (# 27772000)
- Ecostat Shower thermostat Comfort for exposed installation (# 13116XXX)

Water saving EcoSmart version:
- Croma 100 Shower system for exposed installation Vario EcoSmart 9 l/min with Ecostat Comfort thermostat and shower bar 65 cm

Chrome | 27032000 | 307.10



Croma 100 Shower system for exposed installation Multi with Ecostat Comfort thermostat and shower bar 90 cm
- consists of: hand shower, shower thermostat, shower bar, slider, soap dish, shower hose
- spray type: Rain, MonoRain, Massage spray
- spray type adjustment by turning spray disc
- pivot connectors prevent hose from tangling
- 90° position adjustable slider, pivots left and right, up and down
- maximum flow rate at 0.3 MPa: 17 l/min

Chrome | 27085000 | 330.20

Quick Clean

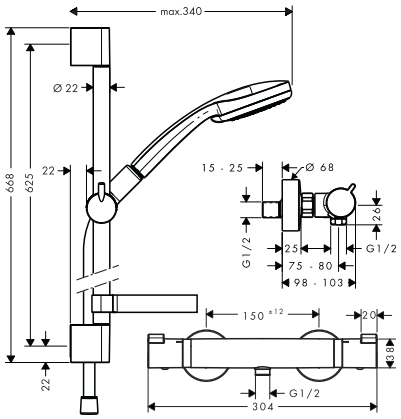

Consisting of:
- Croma 100 Shower set Multi with shower bar 90 cm and soap dish (# 27774000)
- Ecostat Shower thermostat Comfort for exposed installation (# 13116XXX)

Alternative sizes:
- Croma 100 Shower system for exposed installation Multi with Ecostat Comfort thermostat and shower bar 65 cm

Chrome | 27086000 | 308.00

Optional parts:
- Wall bar spacer

Chrome | 97450000 | 8.00

Measurements within scale drawings are in mm.

Technical specifications and units of measure are subject to change.

Crometta 100 shower sets with thermostatic mixer for exposed installation

	finish	code no.	Euro



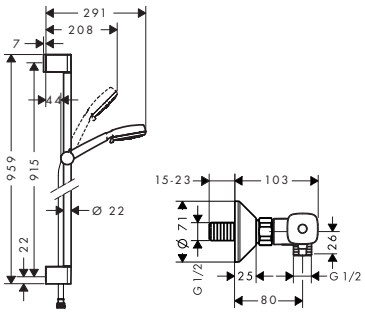

Crometta 100 Shower system for exposed installation Vario with Ecostat universal thermostat and shower bar 90 cm — White/Chrome — 27031400 — 229.70

Quick Clean · XXL Performance

- consists of: hand shower, shower thermostat, shower bar, slider, shower hose
- spray type: Rain, normal spray, Shampoo spray, Massage spray
- spray type adjustment by turning spray disc
- pivot connectors prevent hose from tangling
- 90° position adjustable slider, pivots left and right, up and down
- maximum flow rate at 0.3 MPa: 16 l/min

Consisting of:
- Crometta 100 Shower set Vario with shower bar 90 cm (# 26657400)
- Ecostat Shower thermostat universal for exposed installation (# 13122000)

Alternative sizes:
- Crometta 100 Shower system for exposed installation Vario with Ecostat universal thermostat and shower bar 65 cm — White/Chrome — 27030400 — 224.00

Optional parts:
- Wall bar spacer — Chrome — 97450000 — 8.00

Crometta shower sets with thermostatic mixer for exposed installation



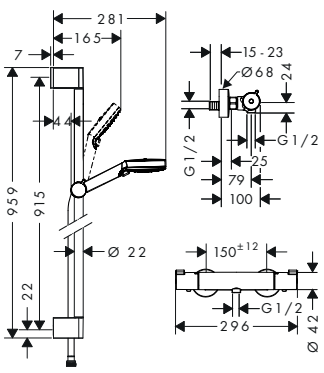

Crometta Shower system for exposed installation Vario with Ecostat 1001 CL thermostat and shower bar 90 cm — White/Chrome — 27813400 — 209.90

Quick Clean · XXL Performance

- consists of: hand shower, shower thermostat, shower bar, slider, shower hose
- spray type: Rain, IntenseRain
- spray type adjustment by turning spray disc
- pivot connectors prevent hose from tangling
- 90° position adjustable slider, pivots left and right, up and down
- maximum flow rate at 0.3 MPa: 14 l/min

Consisting of:
- Crometta Shower set Vario with shower bar 90 cm (# 26536400)
- Ecostat Shower thermostat 1001 CL for exposed installation (# 13211000)

Alternative sizes:
- Crometta Shower system for exposed installation Vario with Ecostat 1001 CL thermostat and shower bar 65 cm — White/Chrome — 27812400 — 201.10

Measurements within scale drawings are in mm.

Technical specifications and units of measure are subject to change.

Unica'E wall bars



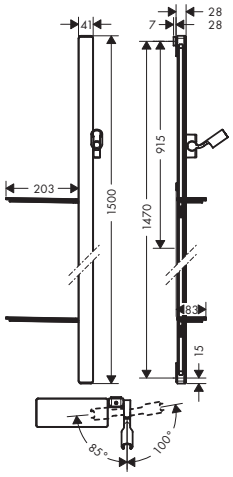

	finish	code no.	Euro
Unica Shower bar E 150 cm with shower hose · consists of: shower bar, shower hose, slider, soap dishes · pivot connectors prevent hose from tangling · hose nut: for shower hoses with conical nut on both sides · 90° position adjustable slider, pivots left and right, up and down · shelf made of safety glass · wall bar type: flat aluminium profile with safety glass finish · bar width: 41 mm · fully chrome-plated shower slide · self-locking slide · slide inclination angle steplessly adjustable · wall supports of plastic · finish: chrome, white or black	Chrome White/Chrome Black/Chrome	27645000 27645400 27645600	400.40 400.40 400.40
Consisting of: · Isiflex Shower hose 160 cm (# 28276XXX) · Casetta Soap dish E (# 26511XXX)			
Alternative sizes:			
· Unica Shower bar E 90 cm with shower hose	Chrome White/Chrome Black/Chrome	27640000 27640400 27640600	295.00 295.00 295.00
Optional parts:			
· Wall bar spacer	Grey	93124000	8.20
· Casetta Soap dish E	Chrome White/Chrome Black/Chrome	26511000 26511400 26511600	63.20 63.20 63.20
Wall bar spacer · height: 7 mm	Grey	93124000	8.20

Avantgarde style wall bars





Unica Shower bar PuraVida 90 cm with shower hose · consists of: shower bar, shower hose, slider · wall bar type: flat and slim aluminium profile · fully chrome-plated metal shower slide · self-locking slide · slide inclination angle steplessly adjustable · silent inclination angle adjustment	Chrome	27844000	271.80
Consisting of: · Isiflex Shower hose 160 cm (# 28276XXX)			
Optional parts:			
· Raindance Corner fitting set		28694000	32.30
· Casetta Soap dishes Raindance	Chrome	28698000	72.80

Measurements within scale drawings are in mm.

Technical specifications and units of measure are subject to change.

Modern style wall bars

	finish	code no.	Euro
 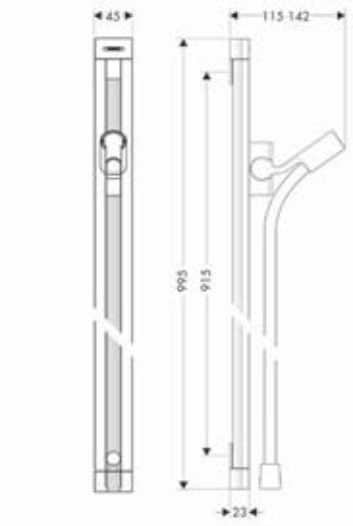			
Unica Shower bar Raindance 90 cm with shower hose · consists of: shower bar, shower hose, slider · wall bar type: flat and slim aluminium profile · bar width: 45 mm · fully chrome-plated metal shower slide · self-locking slide · slide inclination angle steplessly adjustable · silent inclination angle adjustment	Chrome	27636000	267.90
Consisting of: · Isiflex Shower hose 160 cm (# 28276XXX)			
Optional parts:			
· Raindance Corner fitting set		28694000	32.30
· Casetta Soap dishes Raindance	Chrome	28698000	72.80
 			
Raindance Corner fitting set · material: plastic		28694000	32.30
 			
Raindance Wall bar spacer · purpose of use: also usable as an extension · material: plastic	Chrome	98993000	7.50

Measurements within scale drawings are in mm.

Technical specifications and units of measure are subject to change.

	finish	code no.	Euro
 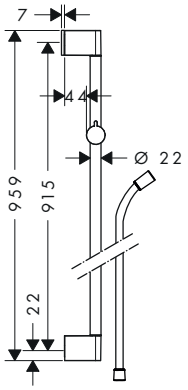			
Unica Shower bar Croma 90 cm with shower hose · consists of: shower bar, shower hose, slider · slide inclination angle can be adjusted by 45° · wall bar type: chrome-plated brass pipe · bar width: 22 mm · fully chrome-plated shower slide · slide with locking mechanism · slide inclination angle adjustable in 2 steps · silent inclination angle adjustment · chrome-plated wall supports of plastic	Chrome	26504000	68.40
Consisting of: · Isiflex Shower hose 160 cm (# 28276XXX)			
Alternative sizes:			
· Unica Shower bar Croma 65 cm with shower hose	Chrome	26503000	62.60
Alternative products:			
· Unica Shower bar Croma 90 cm	Chrome	26506000	50.90
Optional parts:			
· Wall bar spacer	Chrome	97450000	8.00
 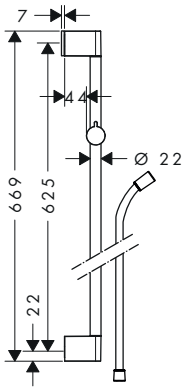			
Unica Shower bar Croma 65 cm with shower hose · consists of: shower bar, shower hose, slider · slide inclination angle can be adjusted by 45° · wall bar type: chrome-plated brass pipe · bar width: 22 mm · fully chrome-plated shower slide · slide with locking mechanism · slide inclination angle adjustable in 2 steps · silent inclination angle adjustment · chrome-plated wall supports of plastic	Chrome	26503000	62.60
Consisting of: · Isiflex Shower hose 160 cm (# 28276XXX)			
Alternative sizes:			
· Unica Shower bar Croma 90 cm with shower hose	Chrome	26504000	68.40
Alternative products:			
· Unica Shower bar Croma 65 cm	Chrome	26505000	45.20
Optional parts:			
· Wall bar spacer	Chrome	97450000	8.00

Measurements within scale drawings are in mm.

	finish	code no.	Euro
Unica Shower bar S Puro 90 cm with shower hose	Chrome	28631000	120.60
· consists of: shower bar, shower hose, slider	**NEW** Brushed Bronze	28631140	181.30
· wall bar type: chrome-plated brass pipe	**NEW** Brushed Black Chrome	28631340	181.30
· bar width: 22 mm	**NEW** Matt Black	28631670	169.00
· fully chrome-plated metal shower slide	**NEW** Matt White	28631700	169.00
· slide with locking mechanism	Brushed Nickel	28631820	180.90
· slide inclination angle steplessly adjustable	**NEW** Polished Gold Optic	28631990	181.30
· inclination angle adjustable via raster			
· chrome-plated wall supports			
Consisting of:			
· Isiflex Shower hose 160 cm (# 28276XXX)			
Alternative sizes:			
· Unica Shower bar S Puro 65 cm with shower hose	Chrome	28632000	112.60
	NEW Brushed Bronze	28632140	169.00
	NEW Brushed Black Chrome	28632340	169.00
	NEW Matt Black	28632670	157.70
	NEW Matt White	28632700	157.70
	NEW Polished Gold Optic	28632990	169.00
Optional parts:			
· Casetta Soap dish S Puro	Chrome	28679000	35.60
· Casetta Soap dishes Unica 88	Transparent	28675000	26.10
· Wall bar spacer	Chrome	97450000	8.00



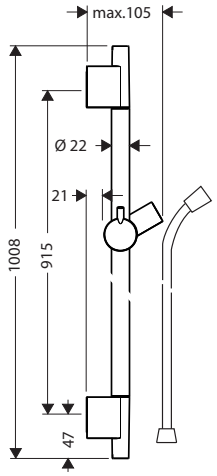

Unica Shower bar S Puro Reno 72 cm	Chrome	28662000	111.40
· consists of: shower bar, slider			
· wall bar type: chrome-plated brass pipe			
· bar width: 22 mm			
· fully chrome-plated shower slide			
· slide with locking mechanism			
· slide inclination angle steplessly adjustable			
· inclination angle adjustable via raster			
· chrome-plated wall supports			
· variable wall support			
Alternative sizes:			
· Unica Shower bar S Puro Reno 105 cm	Chrome	28663000	117.40



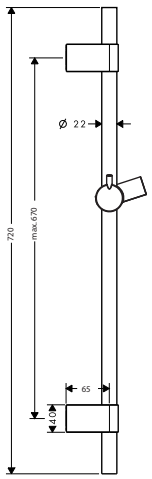

Unica Shower bar Reno 72 cm	Chrome	27704000	67.60
· consists of: shower bar, slider			
· wall bar type: chrome-plated brass pipe			
· bar width: 22 mm			
· variable drilling hole distance: 400 - 670 mm			
· fully chrome-plated shower slide			
· slide with locking mechanism			
· slide inclination angle adjustable in 2 steps			
· chrome-plated wall supports of plastic			
· variable wall support			



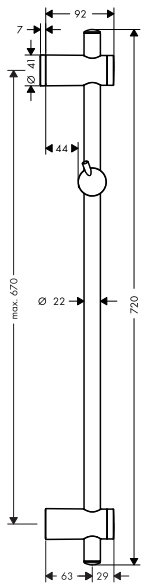

Measurements within scale drawings are in mm.

Technical specifications and units of measure are subject to change.

	finish	code no.	Euro
 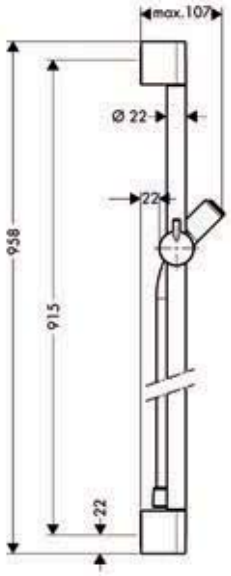			
Unica Shower bar C 90 cm with shower hose · consists of: shower bar, shower hose, slider · wall bar type: chrome-plated brass pipe · bar width: 22 mm · translucent plastic shower slide · slide with locking mechanism · slide inclination angle steplessly adjustable · inclination angle adjustable via raster · chrome-plated wall supports	Chrome	27610000	80.00
Consisting of: · Isiflex Shower hose 160 cm (# 28276XXX)			
Alternative sizes:			
· Unica Shower bar C 65 cm with shower hose	Chrome	27611000	71.40
Optional parts:			
· Casetta Soap dish C	Chrome	28678000	14.50
 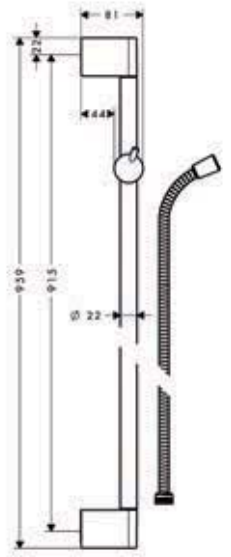			
Unica Shower bar Crometta 90 cm with shower hose · consists of: shower bar, shower hose, slider · wall bar type: chrome-plated brass pipe · bar width: 22 mm · fully chrome-plated shower slide · slide with locking mechanism · slide inclination angle adjustable in 2 steps · silent inclination angle adjustment · chrome-plated wall supports	Chrome	27614000	55.20
Consisting of: · Metaflex Shower hose 160 cm (# 28266000)			
Alternative sizes:			
· Unica Shower bar Crometta 65 cm with shower hose	Chrome	27615000	52.10
Alternative products:			
· Unica Shower bar Crometta 90 cm	Chrome	27609000	49.60
Optional parts:			
· Casetta Soap dish C	Chrome	28678000	14.50
 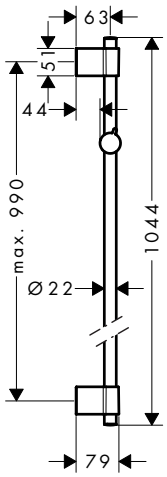			
Unica Shower bar Varia 105 cm · consists of: shower bar, slider · wall bar type: chrome-plated brass pipe · bar width: 22 mm · variable drilling hole distance: 400 mm - 970 mm · fully chrome-plated shower slide · slide inclination angle adjustable in 2 steps · silent inclination angle adjustment · chrome-plated wall supports of plastic · variable wall support	Chrome	27356000	57.10
Alternative sizes:			
· Unica Shower bar Varia 72 cm	Chrome	27355000	51.60

Measurements within scale drawings are in mm.

	finish	code no.	Euro
Wall bar spacer · material: plastic	Chrome	97450000	8.00



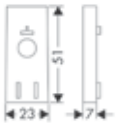

Unica Comfort wall bars

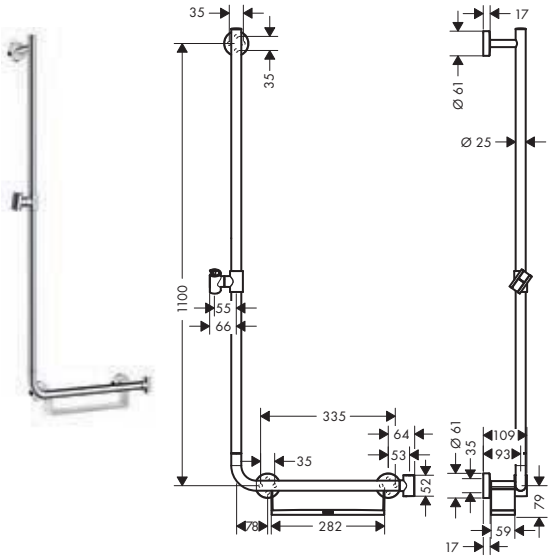

Unica Shower bar Comfort 110 cm left · consists of: shower bar, shelf, slider · TÜV certified · shower holder can be removed · wallbar could be also used as grab bar · shelf made of plastic, finish white · shelf can be removed for cleaning · 90° position adjustable slider, pivots left and right, up and down · fully chrome-plated metal shower slide · bar width: 25 mm · material: solid brass · chrome-plated wall supports of metal	White/Chrome	26403400	293.60
Alternative products:			
· Unica Shower bar Comfort 110 cm right	White/Chrome	26404400	293.60
Optional parts:			
· Unica Foot support Comfort	Chrome	26329000	141.40
· AXOR Carlton Wall bar spacer 7 mm	Chrome	96380000	8.20

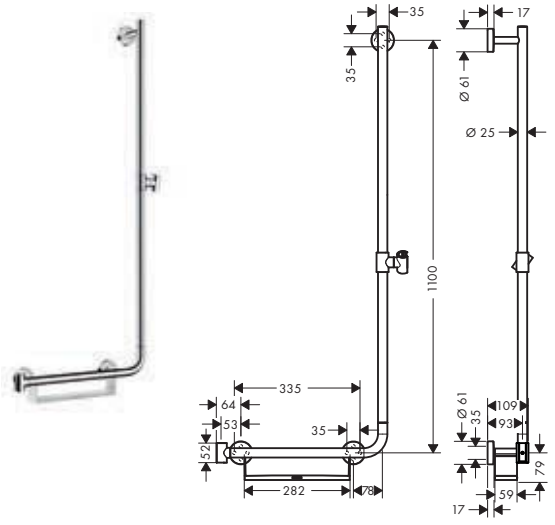

Unica Shower bar Comfort 110 cm right · consists of: shower bar, shelf, slider · TÜV certified · shower holder can be removed · wallbar could be also used as grab bar · shelf made of plastic, finish white · shelf can be removed for cleaning · 90° position adjustable slider, pivots left and right, up and down · fully chrome-plated metal shower slide · bar width: 25 mm · material: solid brass · chrome-plated wall supports of metal	White/Chrome	26404400	293.60
Alternative products:			
· Unica Shower bar Comfort 110 cm left	White/Chrome	26403400	293.60
Optional parts:			
· Unica Foot support Comfort	Chrome	26329000	141.40
· AXOR Carlton Wall bar spacer 7 mm	Chrome	96380000	8.20

Measurements within scale drawings are in mm.

Technical specifications and units of measure are subject to change.

	finish	code no.	Euro
Unica Shower bar Comfort 90 cm · consists of: shower bar, slider · TÜV certified · wallbar could be also used as grab bar · 90° position adjustable slider, pivots left and right, up and down · fully chrome-plated metal shower slide · bar width: 25 mm · material: solid brass · chrome-plated wall supports of metal	Chrome	26402000	184.80
Alternative sizes: · Unica Shower bar Comfort 65 cm	Chrome	26401000	174.00
Optional parts: · Unica Grab handle Comfort with shelf and shower holder	White/Chrome	26328400	130.50
· Unica Foot support Comfort	Chrome	26329000	141.40
· AXOR Carlton Wall bar spacer 7 mm	Chrome	96380000	8.20

Classic style wall bars

Unica Shower bar Classic 65 cm with shower hose · consists of: shower bar, shower hose, slider · wall bar type: chrome-plated brass pipe · bar width: 22 mm · fully chrome-plated metal shower slide · slide with locking mechanism · slide inclination angle steplessly adjustable · inclination angle adjustable via raster · chrome-plated wall supports	Chrome Brushed Nickel	27617000 27617820	160.20 240.30
Consisting of: · Sensoflex Metal shower hose 160 cm (# 28136000)			
Optional parts: · Casetta Soap dish C	Chrome	28678000	14.50
Wall bar spacer for Unica wall bar S · material: plastic	Chrome	96184000	7.50
Casetta Soap dish C · purpose of use: for shower bars with Ø 22 mm · removable	Chrome	28678000	14.50
Casetta Soap dish E · purpose of use: for shower bars with Ø 18 / 22 / 25 mm · material: plastic · removable	Chrome	26519000	18.40

Measurements within scale drawings are in mm.

	finish	code no.	Euro



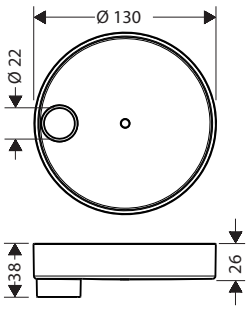

Casetta Soap dish S Puro
- self-draining soap dish for Unica S and C wallbars
- purpose of use: for shower bars with Ø 22 mm
- material: plastic
- removable

Chrome — 28679000 — 35.60

Rainfinity shower holder sets

NEW



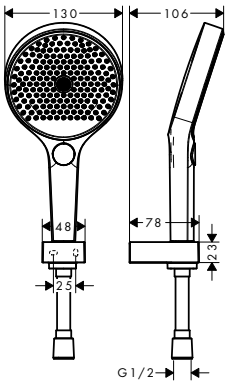

Rainfinity Shower holder set 130 3jet with shower hose 125 cm
- consists of: hand shower, shower holder, shower hose
- flow rate hand shower connection at 0.3 MPa: 14 l/min
- spray type: PowderRain, Intense PowderRain, MonoRain
- convenient diversion via Select button
- shower head size: 130 mm
- pivot connectors prevent hose from tangling
- maximum flow rate at 0.3 MPa: 14 l/min
- wall mounting: screw fastening

Chrome — 26852000 — 153.00
Matt White — 26852700 — 198.90

Select · Quick Clean · XXL Performance

Consisting of:
- Rainfinity Hand shower 130 3jet (# 26864XXX)
- Isiflex Shower hose 125 cm (# 28272XXX)
- Shower holder Porter E (# 28387XXX)

NEW

Alternative sizes:

NEW
- Rainfinity Shower holder set 130 3jet with shower hose 160 cm

Chrome — 26851000 — 155.00
Matt White — 26851700 — 201.50

NEW



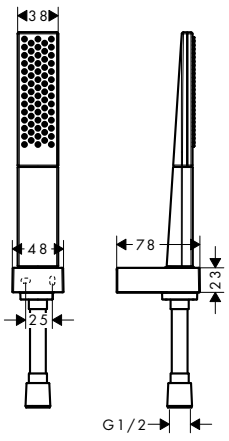

Rainfinity Shower holder set 100 1jet with shower hose 125 cm
- consists of: baton hand shower, shower holder, shower hose
- flow rate hand shower connection at 0.3 MPa: 14 l/min
- spray type: PowderRain
- shower head size: 100 mm
- pivot connectors prevent hose from tangling
- maximum flow rate at 0.3 MPa: 14 l/min
- wall mounting: screw fastening

Chrome — 26857000 — 138.00
Matt White — 26857700 — 179.40

Quick Clean

Consisting of:
- Rainfinity Baton hand shower 100 1jet (# 26866XXX)
- Isiflex Shower hose 125 cm (# 28272XXX)
- Shower holder Porter E (# 28387XXX)

NEW

Alternative sizes:

NEW
- Rainfinity Shower holder set 100 1jet with shower hose 160 cm

Chrome — 26856000 — 140.00
Matt White — 26856700 — 182.00

Measurements within scale drawings are in mm.

Technical specifications and units of measure are subject to change.

Raindance Select E shower holder sets



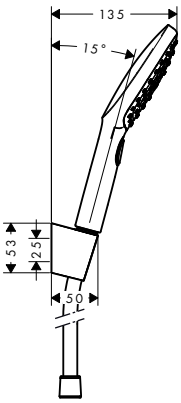

	finish	code no.	Euro
Raindance Select E Shower holder set 120 3jet with shower hose 160 cm · consists of: hand shower, shower holder, shower hose · spray type: RainAir, Rain, Whirl · convenient diversion via Select button · pivot connectors prevent hose from tangling · maximum flow rate at 0.3 MPa: 15 l/min · chrome-plated wall supports of plastic **Consisting of:** · Raindance Select E Hand shower 120 3jet (# 26520XXX) · Shower holder Porter S (# 28331XXX) · Isiflex Shower hose 160 cm (# 28276XXX)	Chrome White/Chrome	26720000 26720400	116.90 116.90
Alternative sizes: · Raindance Select E Shower holder set 120 3jet with shower hose 125 cm	Chrome White/Chrome	26700000 26700400	114.90 114.90

Raindance Select S shower holder sets



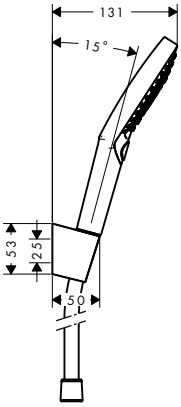

	finish	code no.	Euro
Raindance Select S Shower holder set 120 3jet PowderRain with shower hose 125 cm · consists of: hand shower, shower holder, shower hose · spray type: PowderRain, Rain, Whirl · convenient diversion via Select button · shower head size: 125 mm · pivot connectors prevent hose from tangling · maximum flow rate at 0.3 MPa: 12 l/min · chrome-plated wall supports of plastic **Consisting of:** · Shower holder Porter S (# 28331XXX) · Raindance Select S Hand shower 120 3jet PowderRain (# 26014000) · Isiflex Shower hose 125 cm (# 28272XXX)	Chrome	27669000	117.80
Alternative sizes: · Raindance Select S Shower holder set 120 3jet PowderRain with shower hose 160 cm	Chrome	27668000	119.80



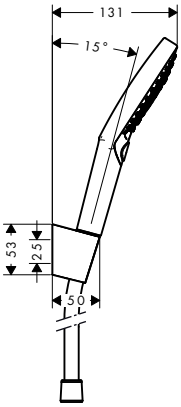

	finish	code no.	Euro
Raindance Select S Shower holder set 120 3jet with shower hose 160 cm · consists of: hand shower, shower holder, shower hose · spray type: RainAir, Rain, Whirl · convenient diversion via Select button · shower head size: 125 mm · pivot connectors prevent hose from tangling · maximum flow rate at 0.3 MPa: 15 l/min · chrome-plated wall supports of plastic **Consisting of:** · Raindance Select S Hand shower 120 3jet (# 26530XXX) · Shower holder Porter S (# 28331XXX) · Isiflex Shower hose 160 cm (# 28276XXX)	Chrome White/Chrome	26721000 26721400	116.90 116.90
Alternative sizes: · Raindance Select S Shower holder set 120 3jet with shower hose 125 cm	Chrome White/Chrome	26701000 26701400	114.90 114.90

Measurements within scale drawings are in mm.

Croma Select E shower holder sets

	finish	code no.	Euro
 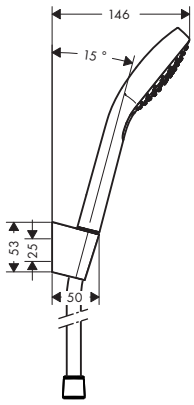	**Croma Select E Shower holder set Vario with shower hose 125 cm** · consists of: hand shower, shower holder, shower hose · spray type: Rain, IntenseRain, TurboRain · convenient diversion via Select button · shower head size: 110 mm · pivot connectors prevent hose from tangling · maximum flow rate at 0.3 MPa: 15 l/min · chrome-plated wall supports of plastic **Consisting of:** · Croma Select E Hand shower Vario (# 26812400) · Shower holder Porter S (# 28331XXX) · Isiflex Shower hose 125 cm (# 28272XXX)	White/Chrome	26425400	69.60
	Alternative sizes: · Croma Select E Shower holder set Vario with shower hose 160 cm	White/Chrome	26413400	73.10
 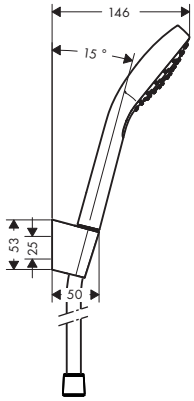	**Croma Select E Shower holder set 1jet with shower hose 125 cm** · consists of: hand shower, shower holder, shower hose · spray type: Rain · shower head size: 110 mm · pivot connectors prevent hose from tangling · maximum flow rate at 0.3 MPa: 16 l/min · chrome-plated wall supports of plastic **Consisting of:** · Croma Select E Hand shower 1jet (# 26814400) · Shower holder Porter S (# 28331XXX) · Isiflex Shower hose 125 cm (# 28272XXX)	White/Chrome	26424400	58.10
	Alternative sizes: · Croma Select E Shower holder set 1jet with shower hose 160 cm	White/Chrome	26412400	61.40

Croma Select S shower holder sets

	finish	code no.	Euro
 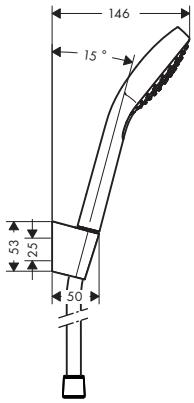	**Croma Select S Shower holder set Vario with shower hose 125 cm** · consists of: hand shower, shower holder, shower hose · spray type: Rain, IntenseRain, TurboRain · convenient diversion via Select button · shower head size: 110 mm · pivot connectors prevent hose from tangling · maximum flow rate at 0.3 MPa: 15 l/min · chrome-plated wall supports of plastic **Consisting of:** · Croma Select S Hand shower Vario (# 26802400) · Shower holder Porter S (# 28331XXX) · Isiflex Shower hose 125 cm (# 28272XXX)	White/Chrome	26421400	69.60
	Alternative sizes: · Croma Select S Shower holder set Vario with shower hose 160 cm	White/Chrome	26411400	73.10

Measurements within scale drawings are in mm.

Technical specifications and units of measure are subject to change.

	finish	code no.	Euro



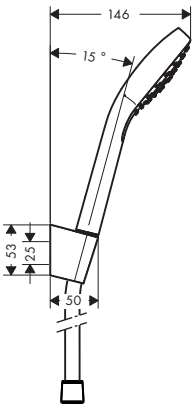

Croma Select S Shower holder set 1jet with shower hose 125 cm
- consists of: hand shower, shower holder, shower hose
- spray type: Rain
- shower head size: 110 mm
- pivot connectors prevent hose from tangling
- maximum flow rate at 0.3 MPa: 16 l/ min
- chrome-plated wall supports of plastic

White/Chrome | 26420400 | 58.10

Quick Clean | XXL Performance

Consisting of:
- Croma Select S Hand shower 1jet (# 26804400)
- Shower holder Porter S (# 28331XXX)
- Isiflex Shower hose 125 cm (# 28272XXX)

Alternative sizes:
- Croma Select S Shower holder set 1jet with shower hose 160 cm — White/Chrome | 26410400 | 61.40

Croma 100 shower holder sets



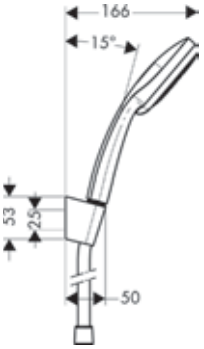

Croma 100 Shower holder set Multi with shower hose 125 cm
- consists of: hand shower, shower holder, shower hose
- spray type: MonoRain, Massage spray, Rain
- spray type adjustment by turning spray disc
- shower head size: 100 mm
- pivot connectors prevent hose from tangling
- maximum flow rate at 0.3 MPa: 19 l/ min
- chrome-plated wall supports of plastic

Chrome | 27593000 | 86.40

Quick Clean | XXL Performance

Consisting of:
- Croma 100 Hand shower Multi (# 28536XXX)
- Shower holder Porter S (# 28331XXX)
- Isiflex Shower hose 125 cm (# 28272XXX)

Alternative sizes:
- Croma 100 Shower holder set Multi with shower hose 160 cm — Chrome | 27595000 | 92.30



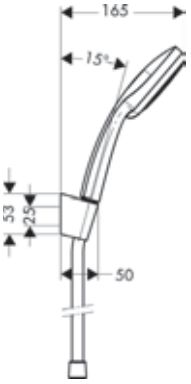

Croma 100 Shower holder set Vario with shower hose 125 cm
- consists of: hand shower, shower holder, shower hose
- spray type: Rain, normal spray, Shampoo spray, Massage spray
- spray type adjustment by turning spray disc
- shower head size: 100 mm
- pivot connectors prevent hose from tangling
- maximum flow rate at 0.3 MPa: 18 l/ min
- chrome-plated wall supports of plastic

Chrome | 27592000 | 62.10

Quick Clean | XXL Performance

Consisting of:
- Croma 100 Hand shower Vario (# 28535000)
- Shower holder Porter S (# 28331XXX)
- Isiflex Shower hose 125 cm (# 28272XXX)

Alternative sizes:
- Croma 100 Shower holder set Vario with shower hose 160 cm — Chrome | 27594000 | 64.50

Measurements within scale drawings are in mm.

Technical specifications and units of measure are subject to change.

	finish	code no.	Euro
Croma 100 Shower holder set Mono with shower hose 125 cm · consists of: hand shower, shower holder, shower hose · spray type: Rain · pivot connectors prevent hose from tangling · maximum flow rate at 0.3 MPa: 16 l/ min · chrome-plated wall supports of plastic **Consisting of:** · Croma 100 Hand shower Mono (# 28580000) · Shower holder Porter S (# 28331XXX) · Isiflex Shower hose 125 cm (# 28272XXX)	Chrome	27574000	54.10
Alternative sizes: · Croma 100 Shower holder set Mono with shower hose 160 cm	Chrome	27575000	55.80



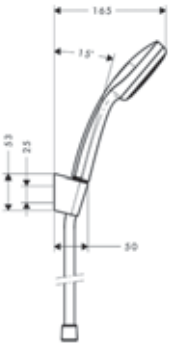

Crometta 100 shower holder sets

	finish	code no.	Euro
Crometta 100 Shower holder set Vario with shower hose 125 cm · consists of: hand shower, shower holder, shower hose · spray type: Rain, normal spray, Shampoo spray, Massage spray · spray type adjustment by turning spray disc · shower head size: 100 mm · without pivot joints · maximum flow rate at 0.3 MPa: 18 l/ min · chrome-plated wall supports of plastic **Consisting of:** · Crometta 100 Hand shower Vario (# 26824400) · Shower holder Porter S (# 28331XXX) · Metaflex Shower hose 125 cm (# 28262000)	White/Chrome	26666400	48.00
Alternative sizes: · Crometta 100 Shower holder set Vario with shower hose 160 cm	White/Chrome	26667400	50.40



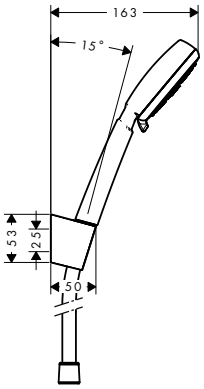

	finish	code no.	Euro
Crometta 100 Shower holder set 1jet with shower hose 125 cm · consists of: hand shower, shower holder, shower hose · spray type: Rain · shower head size: 100 mm · without pivot joints · maximum flow rate at 0.3 MPa: 16 l/ min · chrome-plated wall supports of plastic **Consisting of:** · Crometta 100 Hand shower 1jet (# 26825400) · Shower holder Porter S (# 28331XXX) · Metaflex Shower hose 125 cm (# 28262000)	White/Chrome	26664400	42.00
Alternative sizes: · Crometta 100 Shower holder set 1jet with shower hose 160 cm	White/Chrome	26665400	44.30



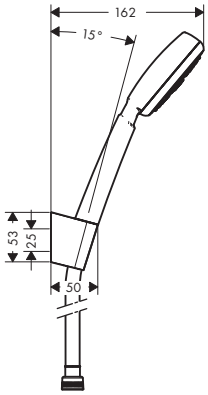

Measurements within scale drawings are in mm.

Technical specifications and units of measure are subject to change.

Crometta shower holder sets

	finish	code no.	Euro
Crometta Shower holder set Vario with shower hose 125 cm · consists of: hand shower, shower holder, shower hose · spray type: Rain, IntenseRain · spray type adjustment by turning spray disc · shower head size: 100 mm · pivot connectors prevent hose from tangling · maximum flow rate at 0.3 MPa: 14 l/min · chrome-plated wall supports of plastic	White/Chrome	26691400	34.20
Consisting of: · Crometta Hand shower Vario (# 26330400) · Shower holder Porter S (# 28331XXX) · Comfortflex Shower hose 125 cm (# 28167000)			
Alternative sizes:			
· Crometta Shower holder set Vario with shower hose 160 cm	White/Chrome	26692400	36.50
Water saving EcoSmart version:			
· Crometta Shower holder set Vario EcoSmart 9 l/min with shower hose 125 cm	White/Chrome	26693400	36.50
· Crometta Shower holder set Vario EcoSmart 9 l/min with shower hose 160 cm	White/Chrome	26694400	38.60



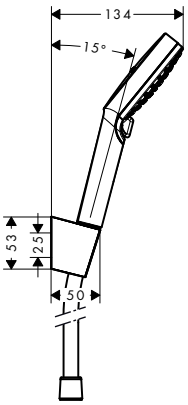

	finish	code no.	Euro
Crometta Shower holder set 1jet with shower hose 125 cm · consists of: hand shower, shower holder, shower hose · spray type: Rain · shower head size: 100 mm · pivot connectors prevent hose from tangling · maximum flow rate at 0.3 MPa: 14 l/min · chrome-plated wall supports of plastic	White/Chrome	26690400	32.10
Consisting of: · Crometta Hand shower 1jet (# 26331400) · Shower holder Porter S (# 28331XXX) · Comfortflex Shower hose 125 cm (# 28167000)			
Alternative sizes:			
· Crometta Shower holder set 1jet with shower hose 160 cm	White/Chrome	26567400	34.20
Water saving EcoSmart version:			
· Crometta Shower holder set 1jet EcoSmart 9 l/min with shower hose 125 cm	White/Chrome	26568400	34.20
· Crometta Shower holder set 1jet EcoSmart 9 l/min with shower hose 160 cm	White/Chrome	26569400	36.50



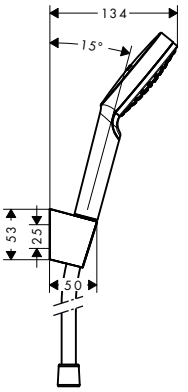

Measurements within scale drawings are in mm.

Technical specifications and units of measure are subject to change.

Crometta 85 shower holder sets

	finish	code no.	Euro
Crometta 85 Shower holder set Multi with shower hose 125 cm · consists of: hand shower, shower holder, shower hose · spray type: MonoRain, normal spray, Massage spray · spray type adjustment by turning spray disc · maximum flow rate at 0.3 MPa: 16 l/min **Consisting of:** · Crometta 85 Hand shower Multi (# 28563000) · Shower holder Porter C (# 27521000) · Metaflex Shower hose 125 cm (# 28262000)	Chrome	27568000	51.80
Crometta 85 Shower holder set Vario with shower hose 125 cm · consists of: hand shower, shower holder, shower hose · spray type: Vario spray, normal spray · spray type adjustment by turning spray disc · maximum flow rate at 0.3 MPa: 17 l/min **Consisting of:** · Crometta 85 Hand shower Vario (# 28562000) · Shower holder Porter C (# 27521000) · Metaflex Shower hose 125 cm (# 28262000)	Chrome	27558000	34.40
Alternative sizes: · Crometta 85 Shower holder set Vario with shower hose 160 cm	Chrome	27559000	36.50
Crometta 85 Shower holder set Mono with shower hose 125 cm · consists of: hand shower, shower holder, shower hose · spray type: normal spray · maximum flow rate at 0.3 MPa: 16 l/min **Consisting of:** · Crometta 85 Hand shower Mono (# 28585000) · Shower holder Porter C (# 27521000) · Metaflex Shower hose 125 cm (# 28262000)	Chrome	27576000	29.90
Alternative sizes: · Crometta 85 Shower holder set Mono with shower hose 160 cm	Chrome	27577000	32.80

Bidette

	finish	code no.	Euro
Bidette hand shower 1jet with shower holder and pressure shower hose 125 cm · consists of: bidette hand shower, shower holder, shower hose · flow rate hand shower connection at 0.3 MPa: 6.6 l/min · with non-return valve · maximum flow rate at 0.3 MPa: 6 l/min · additional comment: Surface shower hose chrome **Consisting of:** · Shower holder Porter S (# 28331XXX)	Chrome	32129000	79.80
Alternative sizes: · Bidette hand shower 1jet with shower holder and pressure shower hose 160 cm	Chrome	32128000	81.40

Measurements within scale drawings are in mm.

Technical specifications and units of measure are subject to change.

	finish	code no.	Euro
 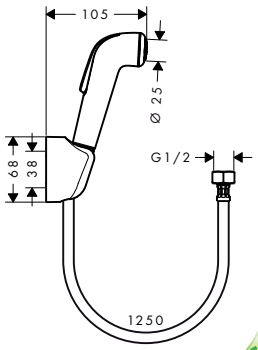	**Bidette hand shower 1jet with shower holder and pressure resistant shower hose 125 cm** · consists of: bidette hand shower, shower holder, shower hose · with non-return valve · maximum flow rate at 0.3 MPa: 6 l/min · additional comment: Surface shower hose chrome **Consisting of:** · Shower holder (# 28321000)	White/Chrome	32127000	45.40
	Alternative sizes: · Bidette hand shower 1jet with shower holder and pressure resistant shower hose 160 cm	White/Chrome	32122000	47.90

Modern style shower holder

NEW



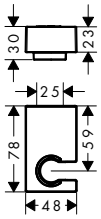

Shower holder Porter E · fixed holding position · for hoses with conical nut · metal	Chrome Brushed Bronze Brushed Black Chrome Matt Black Matt White Polished Gold Optic	28387000 28387140 28387340 28387670 28387700 28387990	45.00 68.00 68.00 63.00 63.00 68.00



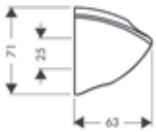

Shower holder Porter C · fixed holding position · for hoses with conical nut	Chrome	27521000	17.60



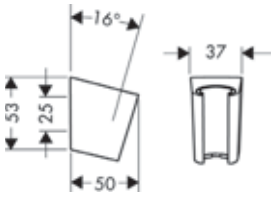

Shower holder Porter S · fixed holding position · for hoses with conical nut	Chrome Stainless Steel Optic	28331000 28331800	23.40 35.00



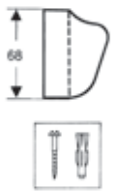

Shower holder · fixed holding position · for hoses with conical nut	Chrome	28321000	19.60

Measurements within scale drawings are in mm.

Technical specifications and units of measure are subject to change.

	finish	code no.	Euro
Shower holder Porter Reno · fixed holding position · for hoses with conical nut · metal	Chrome	28335000	33.90



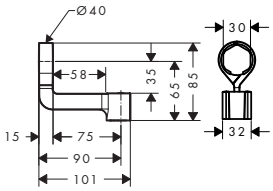

Shower holder Porter Vario · inclination angle steplessly adjustable by 25° · for hoses with conical nut · metal	Chrome	28328000	33.90



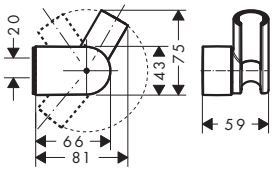

Classic style shower holder

Shower holder Porter Classic · fixed holding position · for hoses with conical nut	Chrome	28324000	27.30



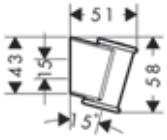

Modern style Fixfit Porter wall outlets

NEW

Rainfinity Wall outlet Porter 500 with shower holder and shower shelf L · integrated support function · metal connection angle · shelf made of safety glass · surface of the shelf at color variant -000 = mirror glass, at color variant -700 = graphite color, satined · hose nut: for shower hoses with conical nut on both sides · 500 mm storage shelf	Chrome Matt White	26843000 26843700	330.00 429.00



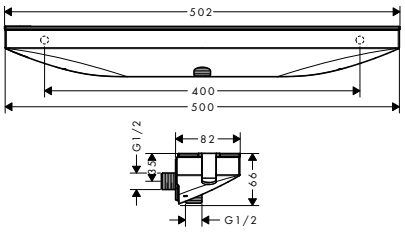

NEW

Rainfinity Wall outlet Porter 500 with shower holder and shower shelf R · integrated support function · metal connection angle · shelf made of safety glass · surface of the shelf at color variant -000 = mirror glass, at color variant -700 = graphite color, satined · non-return valve · hose nut: for shower hoses with conical nut on both sides · 500 mm storage shelf	Chrome Matt White	26858000 26858700	330.00 429.00



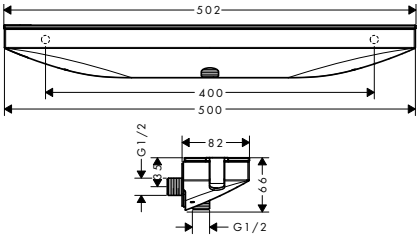

Measurements within scale drawings are in mm.

Technical specifications and units of measure are subject to change.

		finish	code no.	Euro
	**FixFit Wall outlet E with shower holder** · fixed holding position · for hoses with conical nut · with non-return valve · metal housing with internal water supply made of plastic	Chrome	26485000	78.40
	**FixFit Wall outlet S with shower holder** · fixed holding position · for hoses with conical nut · with non-return valve · metal housing with internal water supply made of plastic	Chrome	26487000	78.40
	**FixFit Wall outlet square with shower holder** · fixed holding position · for hoses with conical nut · with non-return valve · metal housing with internal water supply made of plastic	Chrome	26486000	78.40
	**FixFit Wall outlet Porter 300 with shower holder and shower shelf** · integrated support function on both sides · metal connection angle · non-return valve · flexible positioning, adjustment to left or right by 77.5 mm · hose nut: for shower hoses with conical nut on both sides · 300 mm storage shelf · safety glass	Chrome White/Chrome	26456000 26456400	140.30 140.30

Modern style Fixfit wall outlets

	**FixFit Wall outlet E with non-return valve and pivot joint** · ball-joint: shower hose connection with ball joint · plastic connection angle with metal ball joint · non-return valve	Chrome	27505000	29.00
	**FixFit Wall outlet E without non-return valve** · metal connection angle	Chrome **NEW** Brushed Bronze* **NEW** Brushed Black Chrome* **NEW** Matt Black* **NEW** Matt White* **NEW** Polished Gold Optic*	27454000 27454140 27454340 27454670 27454700 27454990	25.20 37.80 37.80 35.30 35.30 37.80
				***available from April 2020**
	Alternative products: · FixFit Wall outlet E with non-return valve	Chrome	27458000	48.70

Measurements within scale drawings are in mm.

Technical specifications and units of measure are subject to change.

		finish	code no.	Euro
	**FixFit Wall outlet E stop with non-return valve and shut-off valve** · non-return valve · with integrated shut-off valve in metal · with ceramic valve	Chrome	27452000	82.50
	**FixFit Wall outlet S with non-return valve and pivot joint** · ball-joint: shower hose connection with ball joint · plastic connection angle with metal ball joint · non-return valve	Chrome	27506000	33.00
	**FixFit Wall outlet S without non-return valve** · metal connection angle	Chrome	27453000	30.20
	Alternative products:			
	· FixFit Wall outlet S with non-return valve	Chrome	27456000	54.30
	· FixFit Wall outlet S with non-return valve and synthetic connection angle	Chrome	26453000	24.90
	**FixFit Wall outlet Square with non-return valve** · plastic connection angle · non-return valve	Chrome	26455000	24.90
		NEW Brushed Bronze	26455140	36.90
		NEW Brushed Black Chrome	26455340	36.90
		NEW Matt Black	26455670	34.80
		NEW Matt White	26455700	34.80
		NEW Polished Gold Optic	26455990	36.90
	**FixFit Wall outlet with non-return valve and pivot joint** · ball-joint: shower hose connection with ball joint · plastic connection angle with metal ball joint · non-return valve	Chrome	27414000	39.60
	**FixFit Wall outlet with non-return valve** · plastic connection angle · non-return valve	Chrome	26457000	24.90

Measurements within scale drawings are in mm.

Technical specifications and units of measure are subject to change.

Classic style Fixfit wall outlet

	finish	code no.	Euro
AXOR Montreux Wall outlet with non-return valve · metal connection angle · non-return valve	Chrome Brushed Nickel	16884000 16884820	38.20 57.30



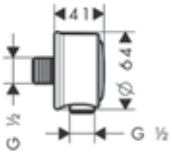

Thread connection · connection dimension DN15/DN20	Chrome	02024000	4.30



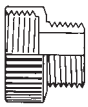

Measurements within scale drawings are in mm.

Shower hoses and accessories



Sensoflex
metal shower hoses
page 122



Isiflex
shower hoses
page 122



Comfortflex
shower hoses
page 122



Metaflex
shower hoses
page 122



Sensoflex metal shower hoses



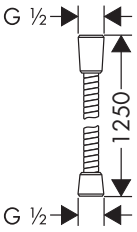

	finish	code no.	Euro
Sensoflex Metal shower hose 125 cm · metal shower hose · with plastic coating, easy to clean · shower hose length: 1.25 m · pivot connectors prevent hose from tangling · kink-protected	Chrome	28132000	35.50
Alternative sizes:			
· Sensoflex Metal shower hose 160 cm	Chrome	28136000	37.10
· Sensoflex Metal shower hose 200 cm	Chrome	28134000	39.00

Isiflex shower hoses



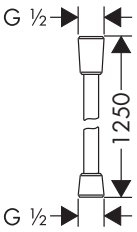

		finish	code no.	Euro
Isiflex Shower hose 125 cm · high-quality shower hose · with plastic coating, easy to clean · shower hose length: 1.25 m · pivot connectors prevent hose from tangling · kink-protected		Chrome	28272000	23.10
		White	28272450	29.00
Alternative sizes:				
· Isiflex Shower hose 160 cm		Chrome	28276000	25.00
	NEW	Brushed Bronze	28276140	37.50
	NEW	Brushed Black	28276340	37.50
		Chrome		
		White	28276450	31.30
	NEW	Matt Black	28276670	35.00
	NEW	Matt White	28276700	35.00
	NEW	Polished Gold Optic	28276990	37.50
· Isiflex Shower hose 200 cm		Chrome	28274000	26.60



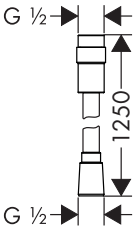

	finish	code no.	Euro
Isiflex Shower hose 125 cm with volume control · high-quality shower hose with metal effect · with plastic coating, easy to clean · shower hose length: 1.25 m · pivot connectors prevent hose from tangling · kink-protected · adjustable flow rate between 6 l/ min and 16 l/ min	Chrome	28249000	43.00
Alternative sizes:			
· Isiflex Shower hose 160 cm with volume control	Chrome	28248000	45.00

Comfortflex shower hoses



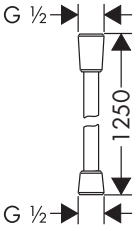

	finish	code no.	Euro
Comfortflex Shower hose 125 cm · high-quality shower hose with metal effect · with plastic coating, easy to clean · shower hose length: 1.25 m · pivot connectors prevent hose from tangling · kink-protected	Chrome	28167000	16.10
Alternative sizes:			
· Comfortflex Shower hose 160 cm	Chrome	28168000	16.80
· Comfortflex Shower hose 200 cm	Chrome	28169000	21.10

Metaflex shower hoses



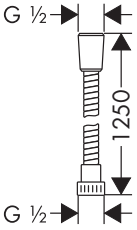

	finish	code no.	Euro
Metaflex Shower hose 125 cm · plastic shower hose with coil winding · with plastic coating, easy to clean · shower hose length: 1.25 m · without pivot joints · kink-protected	Chrome	28262000	12.70
Alternative sizes:			
· Metaflex Shower hose 160 cm	Chrome	28266000	13.50
· Metaflex Shower hose 200 cm	Chrome	28264000	18.10

Measurements within scale drawings are in mm.

Technical specifications and units of measure are subject to change.

Accessories

	finish	code no.	Euro
Hose duct · material: transparent plastic	Transparent	28072000	4.00



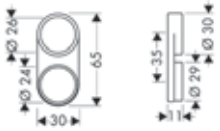

Thread connection · connection dimension DN15/DN20	Chrome	02024000	4.30



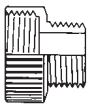

Measurements within scale drawings are in mm.

Technical specifications and units of measure are subject to change.

Overhead showers



Rainfinity	page 128		Rainmaker Select	page 132	
Raindance Select E	page 136		Raindance Select S	page 138	
Croma Select E	page 140		Croma Select S	page 141	
PuraVida	page 141		Raindance Rainmaker	page 142	
Raindance E	page 145		Raindance S	page 148	
Croma E	page 152		Croma	page 152	
Crometta E	page 154		Crometta S	page 155	

Selected overhead showers at a glance

		Crometta®		**Croma®**		
						
		Crometta® Overhead shower 160 1jet	**Crometta® E** Overhead shower 240 1jet	**Croma®** Overhead shower 220 1jet	**Croma® E** Overhead shower 280 1jet	**Croma® Select E** Overhead shower 180 2jet
Overhead shower	Standard	26577, -000	26726, -000	26464, -000	26257, -000	26524, -000, -400
	EcoSmart 9 l/min	26578, -000	26727, -000	26465, -000	26258, -000	26528, -000, -400
	LowPressure		26722, -000			
Overhead shower with wall connection	Standard	+ 27412, -000	+ 27446, -000	+ 27413, -000	+ 27446, -000	+ 27446, -000
	EcoSmart 9 l/min	+ 27412, -000	+ 27446, -000	+ 27413, -000	+ 27446, -000	+ 27446, -000
Overhead shower with ceiling connector	Standard	+ 27479, -000	+ 27467, -000	+ 27479, -000	+ 27467, -000	+ 27467, -000
	EcoSmart 9 l/min	+ 27479, -000	+ 27467, -000	+ 27479, -000	+ 27467, -000	+ 27467, -000
Features	Size of shower head	180 mm	240 x 240 mm	220 mm	280 mm	180 x 180 mm
	Spray face material	Plastic	Plastic	Metal	Metal	Plastic
	Spray modes (l/min in the standard version)	Rain 20 l/min	Rain 18 l/min	RainAir 19 l/min	RainAir 18 l/min	Rain 17 l/min IntenseRain 16 l/min
Uniques	Select			■	■	■
	AirPower					
	QuickClean	■	■	■	■	■

						
			Crometta® S Overhead shower 240 1jet	**Croma®** Overhead shower 160 1jet	**Croma®** Overhead shower 280 1jet	**Croma® Select S** Overhead shower 180 2jet
Overhead shower	Standard		26723, -000	27450, -000	26220, -XXX	26522, -000, -400
	EcoSmart 9 l/min		26724, -000		26221, -XXX	26523, -000, -400
	LowPressure		26725, -000			
Overhead shower with wall connection	Standard		+ 27413, -000	+ 27412, -000	+ 27413, -XXX	+ 27413, -000
	EcoSmart 9 l/min		+ 27413, -000	+ 27412, -000	+ 27413, -XXX	+ 27413, -000
Overhead shower with ceiling connector	Standard		+ 27393, -000	+ 27479, -000	+ 27479, -000	+ 27393, -000
	EcoSmart 9 l/min		+ 27393, -000	+ 27479, -000	+ 27479, -000	+ 27393, -000
Features	Size of shower head		240 mm	160 mm	280 mm	180 mm
	Spray face material		Plastic	Metal	Metal	Plastic
	Spray modes (l/min in the standard version)		Rain 18 l/min	Rain 17 l/min	RainAir 15 l/min	Rain 17 l/min IntenseRain 16 l/min
Uniques	Select				■	■
	AirPower					
	QuickClean		■	■	■	■

■ Available

Raindance®			Rainfinity®		Rainmaker® Select	
			NEW 	NEW 		
Raindance® E Overhead shower 300 1jet	**Raindance® Select S** Overhead shower 300 2jet	**Raindance® Select E** Overhead shower 300 3jet	**Rainfinity®** Overhead shower 250 3jet	**Rainfinity®** Overhead shower 360 3jet	**Rainmaker® Select** Overhead shower 460 2jet	**Rainmaker® Select** Overhead shower 580 3jet
26238, -XXX	27378, -000, -400	26468, -000, -400	26232, -000, -700	26234, -XXX	24005, -400, -600	24001, -400, -600
26239, -000			26233, -000, -700		24015, -400	24011, -400
26250, -000	27337, -000, -400				24004, -400, -600	
26251, -000					24014, -400	
300 x 300 mm	300 mm	300 x 190 mm	250 mm	360 mm	466 x 300 mm	580 x 260 mm
Metal	Metal	Metal	Aluminium	Aluminium	Safety glass	Safety glass
RainAir 19 l/min	Rain 17 l/min RainAir 17 l/min	Rain 18 l/min RainAir 18 l/min RainStream 22 l/min	PowderRain 20 l/min Intense PowderRain 18 l/min RainStream 16 l/min	PowderRain20 l/min Intense PowderRain 18 l/min RainStream 16 l/min	Rain 18 l/min RainStream 15 l/min	RainFlow 17 l/min Rain 17 l/min MonoRain 20 l/min
	■	■				
■	■	■				
■	■	■	■	■	■	■

			NEW 	NEW 		
Raindance® S Overhead shower 240 1jet P	**Raindance® Select S** Overhead shower 240 2jet	**Raindance® Select E** Overhead shower 300 2jet	**Rainfinity®** Overhead shower 250 1jet	**Rainfinity®** Overhead shower 360 1jet	**Rainmaker® Select** Overhead shower 460 1jet	**Rainmaker® Select** Overhead shower 460 3jet
27623, -000			26228, -XXX	26231, -XXX		
			26229, -000, -700			
27607, -000	26466, -000, -400	27385, -000, -400	26226, -000, -700	26230, -XXX	24003, -400, -600	24007, -400, -600
	26470, -000, -400	26609, -000, -400	26227, -000, -700		24013, -400	24017, -400
27620, -000	26467, -000, -400	27384, -000, -400			24002, -400, -600	24006, -400, -600
	26469, -000, -400	26608, -000, -400			24012, -400	24016, -400
240 mm	240 mm	300 x 160 mm	250 mm	360 mm	466 x 270 mm	466 x 300 mm
Metal	Metal	Metal	Aluminium	Aluminium	Safety glass	Safety glass
PowderRain 18 l/min	Rain 17 l/min RainAir 17 l/min	Rain 15 l/min RainAir 15 l/min	PowderRain 16 l/min	PowderRain 23 l/min	Rain 19 l/min	Rain 18 l/min RainStream 15 l/min MonoRain 18 l/min
	■	■				
	■	■				
■	■	■	■	■	■	■

Price

All specified flow rates are based on an operating pressure of 0.3 MPa (3 bar).

Rainfinity overhead showers

NEW



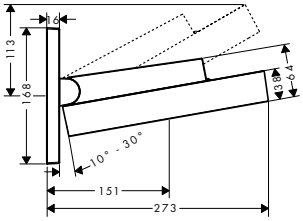

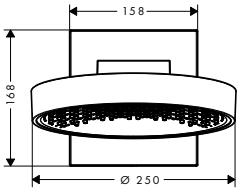

		finish	code no.	Euro
	Rainfinity Overhead shower 250 1jet with wall connector · consists of: overhead shower, shower arm · for wall mounting · projection 273 mm · middle spray disc: 151 mm · shower head size: 250 mm · shower arm vertically inclinable by 10-30° · spray type: PowderRain · maximum flow rate at 0.3 MPa: 19 l/min · flow rate PowderRain spray (at 0.3 MPa): 19 l/min · spray disc surface: graphite · material spray disc: aluminium · overhead shower for cleaning removable · installation: wall · connection thread G ½ · connection dimension: DN15	Chrome Matt White	26226000 26226700	690.00 897.00
	Alternative sizes:			
NEW	· Rainfinity Overhead shower 360 1jet with wall connector	Chrome Brushed Bronze* Brushed Black Chrome* Matt Black* Matt White Polished Gold Optic*	26230000 26230140 26230340 26230670 26230700 26230990	790.00 1,185.00 1,185.00 1,027.00 1,027.00 1,185.00
	Water saving EcoSmart version:			
NEW	· Rainfinity Overhead shower 250 1jet EcoSmart with wall connector	Chrome Matt White	26227000 26227700	690.00 897.00

*** available from April 2020**

Measurements within scale drawings are in mm.

Technical specifications and units of measure are subject to change.

NEW



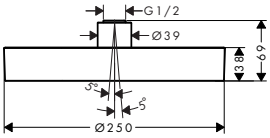

		finish	code no.	Euro
	Rainfinity Overhead shower 250 1jet	Chrome	26228000	580.00
	· shower head size: 250 mm	Brushed Bronze*	26228140	870.00
	· ball-joint: overhead shower angle adjustable	Brushed Black Chrome*	26228340	870.00
	· spray type: PowderRain	Matt Black*	26228670	754.00
	· maximum flow rate at 0.3 MPa: 16.3 l/min	Matt White	26228700	754.00
	· flow rate PowderRain spray (at 0.3 MPa): 16 l/min	Polished Gold Optic*	26228990	870.00
	· spray disc surface: graphite			
	· material spray disc: aluminium			
	· overhead shower for cleaning removable			
	· installation: ceiling or wall			
	· connection thread G ½			
	· connection dimension: DN15			
	Alternative sizes:			
NEW	· Rainfinity Overhead shower 360 1jet	Chrome	26231000	680.00
		Brushed Bronze*	26231140	1,020.00
		Brushed Black Chrome*	26231340	1,020.00
		Matt Black*	26231670	884.00
		Matt White	26231700	884.00
		Polished Gold Optic*	26231990	1,020.00
	Water saving EcoSmart version:			
NEW	· Rainfinity Overhead shower 250 1jet EcoSmart	Chrome	26229000	580.00
		Brushed Bronze*	26229140	870.00
		Brushed Black Chrome*	26229340	870.00
		Matt Black*	26229670	754.00
		Matt White	26229700	754.00
		Polished Gold Optic*	26229990	870.00
	Optional parts:			
NEW	· Shower arm square 38.9 cm	Chrome	27694000	180.00
		Brushed Bronze*	27694140	270.00
		Brushed Black Chrome*	27694340	270.00
		Matt Black*	27694670	252.00
		Matt White	27694700	252.00
		Polished Gold Optic*	27694990	270.00
	· Ceiling connector S 10 cm	Chrome	27393000	54.50
NEW		Brushed Bronze	27393140	81.90
NEW		Brushed Black Chrome	27393340	81.90
NEW		Matt Black	27393670	76.80
NEW		Matt White	27393700	76.80
NEW		Polished Gold Optic	27393990	81.90
	· Ceiling connector S 30 cm	Chrome	27389000	73.50
NEW		Brushed Bronze	27389140	110.60
NEW		Brushed Black Chrome	27389340	110.60
NEW		Matt Black	27389670	103.40
NEW		Matt White	27389700	103.40
NEW		Polished Gold Optic	27389990	110.60

Quick Clean

XXL Performance

***available from April 2020**

***available from April 2020**

Measurements within scale drawings are in mm.

Technical specifications and units of measure are subject to change.

		finish	code no.	Euro
NEW	**Rainfinity Overhead shower 360 1jet with wall connector** · consists of: overhead shower, shower arm for wall mounting · projection 381 mm · middle spray disc: 205 mm · shower head size: 360 mm · shower arm vertically inclinable by 10-30° · spray type: PowderRain · flow rate PowderRain spray (at 0.3 MPa): 21 l/min · spray disc surface: graphite · material spray disc: aluminium · overhead shower for cleaning removable · installation: wall · connection thread G ½ · connection dimension: DN15	Chrome	26230000	790.00
		Brushed Bronze*	26230140	1,185.00
		Brushed Black Chrome*	26230340	1,185.00
		Matt Black*	26230670	1,027.00
		Matt White	26230700	1,027.00
		Polished Gold Optic*	26230990	1,185.00
		Quick Clean / XXL Performance		
		*available from April 2020		
	Alternative sizes:			
NEW	· Rainfinity Overhead shower 250 1jet with wall connector	Chrome	26226000	690.00
		Matt White	26226700	897.00
NEW	**Rainfinity Overhead shower 360 1jet** · shower head size: 360 mm · ball-joint: overhead shower angle (2 x 5°) adjustable · spray type: PowderRain · maximum flow rate at 0.3 MPa: 23.6 l/min · flow rate PowderRain spray (at 0.3 MPa): 23 l/min · spray disc surface: graphite · material spray disc: aluminium · overhead shower for cleaning removable · installation: ceiling or wall · connection thread G ½ · connection dimension: DN15	Chrome	26231000	680.00
		Brushed Bronze*	26231140	1,020.00
		Brushed Black Chrome*	26231340	1,020.00
		Matt Black*	26231670	884.00
		Matt White	26231700	884.00
		Polished Gold Optic*	26231990	1,020.00
		Quick Clean / XXL Performance		
		*available from April 2020		
	Alternative sizes:			
NEW	· Rainfinity Overhead shower 250 1jet	Chrome	26228000	580.00
		Brushed Bronze*	26228140	870.00
		Brushed Black Chrome*	26228340	870.00
		Matt Black*	26228670	754.00
		Matt White	26228700	754.00
		Polished Gold Optic*	26228990	870.00
	Optional parts:			
NEW	· Shower arm square 38.9 cm	Chrome	27694000	180.00
		Brushed Bronze*	27694140	270.00
		Brushed Black Chrome*	27694340	270.00
		Matt Black*	27694670	252.00
		Matt White	27694700	252.00
		Polished Gold Optic*	27694990	270.00
	· Ceiling connector S 10 cm	Chrome	27393000	54.50
		NEW Brushed Bronze	27393140	81.90
		NEW Brushed Black Chrome	27393340	81.90
		NEW Matt Black	27393670	76.80
		NEW Matt White	27393700	76.80
		NEW Polished Gold Optic	27393990	81.90
	· Ceiling connector S 30 cm	Chrome	27389000	73.50
		NEW Brushed Bronze	27389140	110.60
		NEW Brushed Black Chrome	27389340	110.60
		NEW Matt Black	27389670	103.40
		NEW Matt White	27389700	103.40
		NEW Polished Gold Optic	27389990	110.60
		*available from April 2020		

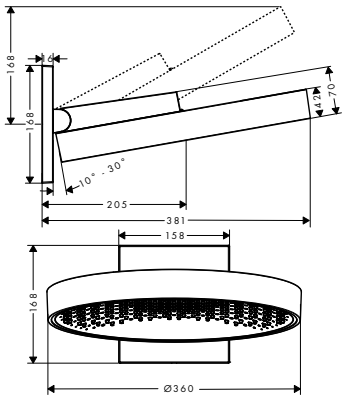

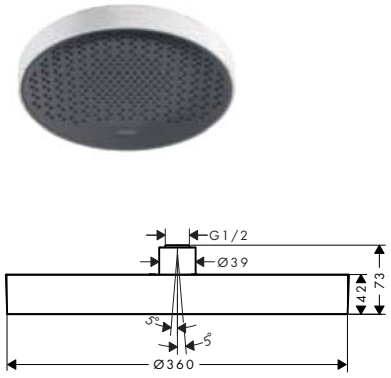

Measurements within scale drawings are in mm.

Technical specifications and units of measure are subject to change.

	finish	code no.	Euro
Rainfinity Overhead shower 250 3jet with wall connector	Chrome	26232000	990.00
	Matt White	26232700	1,287.00

NEW



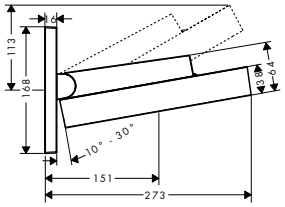

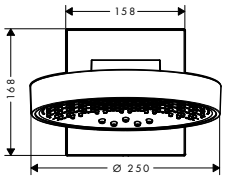

- for wall mounting
- projection 273 mm
- middle spray disc: 151 mm
- shower head size: 250 mm
- shower arm vertically inclinable by 10-30°
- spray type: PowderRain, Intense PowderRain, RainStream
- flow rate Rain spray (at 0.3 MPa): 17 l/min
- flow rate RainStream spray (at 0.3 MPa): 28 l/min
- flow rate Intense PowderRain (at 3bar): 18 l/min
- flow rate PowderRain spray (at 0.3 MPa): 20 l/min
- the 3 spray zones must be controlled via 3 valves or a diverter valve with 3 outlets
- spray disc surface: graphite
- material spray disc: aluminium
- overhead shower for cleaning removable
- installation: wall-mounted - for installation on iBox

Alternative sizes:

NEW

- Rainfinity Overhead shower 360 3jet with wall connector

Chrome	26234000	1,090.00
Brushed Bronze*	26234140	1,635.00
Brushed Black Chrome*	26234340	1,635.00
Matt Black*	26234670	1,417.00
Matt White	26234700	1,417.00
Polished Gold Optic*	26234990	1,635.00

***available from April 2020**

Water saving EcoSmart version:

NEW

- Rainfinity Overhead shower 250 3jet EcoSmart with wall connector

Chrome	26233000	990.00
Matt White	26233700	1,287.00

Required parts:

- Basic set iBox universal — 01800180 — 130.80

Rainfinity Overhead shower 360 3jet with wall connector

NEW



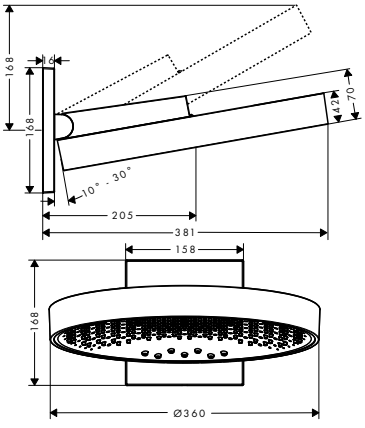

- for wall mounting
- projection 381 mm
- middle spray disc: 205 mm
- shower head size: 360 mm
- shower arm vertically inclinable by 10-30°
- spray type: PowderRain, Intense PowderRain, RainStream
- maximum flow rate at 0.3 MPa: 28.1 l/min
- flow rate RainStream spray (at 0.3 MPa): 16 l/min
- flow rate Intense PowderRain (at 3bar): 18 l/min
- flow rate PowderRain spray (at 0.3 MPa): 20 l/min
- the 3 spray zones must be controlled via 3 valves or a diverter valve with 3 outlets
- spray disc surface: graphite
- material spray disc: aluminium
- overhead shower for cleaning removable
- installation: wall-mounted - for installation on iBox
- connection dimension: DN15

Chrome	26234000	1,090.00
Brushed Bronze*	26234140	1,635.00
Brushed Black Chrome*	26234340	1,635.00
Matt Black*	26234670	1,417.00
Matt White	26234700	1,417.00
Polished Gold Optic*	26234990	1,635.00

***available from April 2020**

Alternative sizes:

NEW

- Rainfinity Overhead shower 250 3jet with wall connector

Chrome	26232000	990.00
Matt White	26232700	1,287.00

Required parts:

- Basic set iBox universal — 01800180 — 130.80

Measurements within scale drawings are in mm.

Technical specifications and units of measure are subject to change.

Rainmaker Select overhead showers



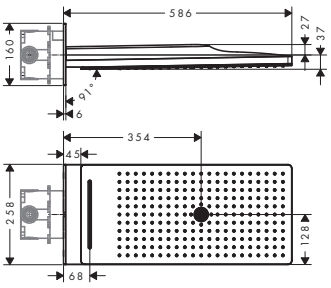

	finish	code no.	Euro
Rainmaker Select Overhead shower 580 3jet · shower head size: 580 x 260 mm · spray type: Rain, RainFlow, MonoRain · flow rate Rain spray (at 0.3 MPa): 17 l/ min · flow rate Mono spray (at 0.3 MPa): 20 l/ min · flow rate RainFlow spray (at 0.3 MPa): 17 l/ min · the 3 spray zones must be controlled via 3 valves or a diverter valve with 3 outlets · easy cleanable glass spray disc · material spray disc: safety glass · spray disc removable for cleaning · installation: wall-mounted - for installation on iBox · connection dimension: DN15/DN20	White/Chrome Black/Chrome	24001400 24001600	2,488.00 2,488.00
Water saving EcoSmart version: · Rainmaker Select Overhead shower 580 3jet EcoSmart 9 l/ min	White/Chrome	24011400	2,488.00
Required parts: · Basic set iBox universal		01800180	130.80
Optional parts: · ShowerSelect Glass Valve for concealed installation for 3 functions · ShowerSelect Glass Thermostat HighFlow for concealed installation for 1 function and additional outlet	White/Chrome Black/Chrome White/Chrome Black/Chrome	15736400 15736600 15735400 15735600	476.10 476.10 655.30 655.30



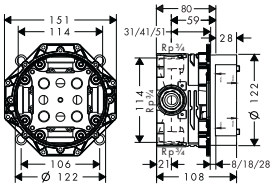

NEW

Basic set iBox universal · connection thread Rp ¾ · suitable for all shower, bath tub and thermostat finish sets for concealed installation · rotationally-symmetric installation · sound-decoupled installation · connection dimension: DN20		01800180	130.80
Alternative products: · Basic set iBox universal with shut-off unit		01850180	169.90
Optional parts: · Extension iBox universal basic set 2.5 cm · Fastening rail set for iBox universal · Assembly aid for iBox universal		13595000 96615000 93500000	46.50 33.00 12.00

Measurements within scale drawings are in mm.

Technical specifications and units of measure are subject to change.

	finish	code no.	Euro
Rainmaker Select Overhead shower 460 3jet with shower arm	White/Chrome	24007400	2,261.90
	Black/Chrome	24007600	2,261.90
· shower head size: 466 x 300 mm · shower arm length: 461 mm · spray type: Rain, RainStream, MonoRain · flow rate Rain spray (at 0.3 MPa): 18 l/min · flow rate RainStream spray (at 0.3 MPa): 15 l/min · flow rate Mono spray (at 0.3 MPa): 18 l/min · the 3 spray zones must be controlled via 3 valves or a diverter valve with 3 outlets · easy cleanable glass spray disc · material spray disc: safety glass · spray disc removable for cleaning · overhead shower for cleaning removable · installation: wall-mounted - for installation on iBox · connection dimension: DN15			
Water saving EcoSmart version:			
· Rainmaker Select Overhead shower 460 3jet EcoSmart 9 l/min with shower arm	White/Chrome	24017400	2,261.90
Required parts:			
· Basic set iBox universal		01800180	130.80
Optional parts:			
· ShowerSelect Glass Valve for concealed installation for 3 functions	White/Chrome	15736400	476.10
	Black/Chrome	15736600	476.10
· ShowerSelect Glass Thermostat HighFlow for concealed installation for 1 function and additional outlet	White/Chrome	15735400	655.30
	Black/Chrome	15735600	655.30



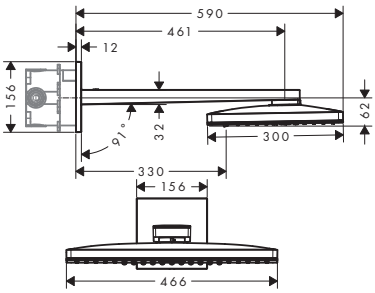

	finish	code no.	Euro
Rainmaker Select Overhead shower 460 3jet with ceiling connector	White/Chrome	24006400	2,148.70
	Black/Chrome	24006600	2,148.70
· shower head size: 460 x 300 mm · spray type: Rain, RainStream, MonoRain · flow rate Rain spray (at 0.3 MPa): 17 l/min · flow rate RainStream spray (at 0.3 MPa): 22 l/min · flow rate Mono spray (at 0.3 MPa): 23 l/min · the 3 spray zones must be controlled via 3 valves or a diverter valve with 3 outlets · easy cleanable glass spray disc · material spray disc: safety glass · spray disc removable for cleaning · overhead shower for cleaning removable · brass ceilling connector · ceiling connection length: 100 mm · installation: ceiling · connection dimension: DN15			
Water saving EcoSmart version:			
· Rainmaker Select Overhead shower 460 3jet EcoSmart 9 l/min with ceiling connector	White/Chrome	24016400	2,148.70
Required parts:			
· Rainmaker Select Basic set for overhead shower with ceiling connector		24010180	226.20
Optional parts:			
· ShowerSelect Glass Valve for concealed installation for 3 functions	White/Chrome	15736400	476.10
	Black/Chrome	15736600	476.10
· ShowerSelect Glass Thermostat HighFlow for concealed installation for 1 function and additional outlet	White/Chrome	15735400	655.30
	Black/Chrome	15735600	655.30



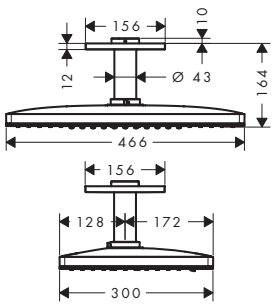

Measurements within scale drawings are in mm.

Technical specifications and units of measure are subject to change.



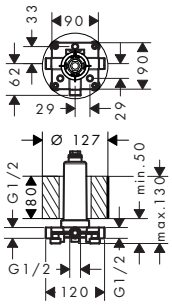

	finish	code no.	Euro
Rainmaker Select Basic set for overhead shower with ceiling connector		24010180	226.20
Optional parts:			
· Rainmaker Select Overhead shower 460 1jet EcoSmart 9 l/min with ceiling connector	White/Chrome	24012400	1,470.30
· Rainmaker Select Overhead shower 460 1jet with ceiling connector	White/Chrome	24002400	1,470.30
	Black/Chrome	24002600	1,470.30
· Rainmaker Select Overhead shower 460 2jet EcoSmart 9 l/min with ceiling connector	White/Chrome	24014400	1,922.60
· Rainmaker Select Overhead shower 460 2jet with ceiling connector	White/Chrome	24004400	1,922.60
	Black/Chrome	24004600	1,922.60
· Rainmaker Select Overhead shower 460 3jet with ceiling connector	White/Chrome	24006400	2,148.70
	Black/Chrome	24006600	2,148.70
· Rainmaker Select Overhead shower 460 3jet EcoSmart 9 l/min with ceiling connector	White/Chrome	24016400	2,148.70



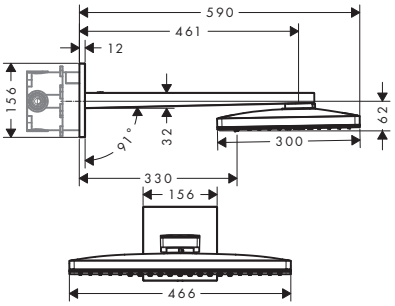

Rainmaker Select Overhead shower 460 2jet with shower arm	White/Chrome	24005400	2,035.60
	Black/Chrome	24005600	2,035.60
· shower head size: 466 x 300 mm · shower arm length: 461 mm · spray type: Rain, RainStream · flow rate Rain spray (at 0.3 MPa): 18 l/min · flow rate RainStream spray (at 0.3 MPa): 15 l/min · the 2 spray zones must be controlled via 2 valves or a diverter valve with 2 outlets · easy cleanable glass spray disc · material spray disc: safety glass · spray disc removable for cleaning · overhead shower for cleaning removable · installation: wall-mounted - for installation on iBox · connection dimension: DN15			
Water saving EcoSmart version:			
· Rainmaker Select Overhead shower 460 2jet EcoSmart 9 l/min with shower arm	White/Chrome	24015400	2,035.60
Required parts:			
· Basic set iBox universal		01800180	130.80
Optional parts:			
· ShowerSelect Glass Valve for concealed installation for 3 functions	White/Chrome	15736400	476.10
	Black/Chrome	15736600	476.10
· ShowerSelect Glass Thermostat HighFlow for concealed installation	White/Chrome	15734400	476.10
	Black/Chrome	15734600	476.10

Measurements within scale drawings are in mm.

Technical specifications and units of measure are subject to change.

	finish	code no.	Euro
 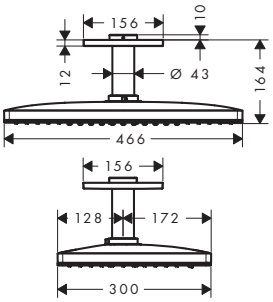			
Rainmaker Select Overhead shower 460 2jet with ceiling connector · shower head size: 460 x 300 mm · spray type: Rain, RainStream · flow rate Rain spray (at 0.3 MPa): 21 l/min · flow rate RainStream spray (at 0.3 MPa): 18 l/min · the 2 spray zones must be controlled via 2 valves or a diverter valve with 2 outlets · easy cleanable glass spray disc · material spray disc: safety glass · spray disc removable for cleaning · overhead shower for cleaning removable · brass ceilling connector · ceiling connection length: 100 mm · installation: ceiling · connection dimension: DN15	White/Chrome Black/Chrome	24004400 24004600	1,922.60 1,922.60
Water saving EcoSmart version: · Rainmaker Select Overhead shower 460 2jet EcoSmart 9 l/min with ceiling connector	White/Chrome	24014400	1,922.60
Required parts: · Rainmaker Select Basic set for overhead shower with ceiling connector		24010180	226.20
Optional parts: · ShowerSelect Glass Valve for concealed installation for 3 functions · ShowerSelect Glass Thermostat HighFlow for concealed installation	White/Chrome Black/Chrome White/Chrome Black/Chrome	15736400 15736600 15734400 15734600	476.10 476.10 476.10 476.10
 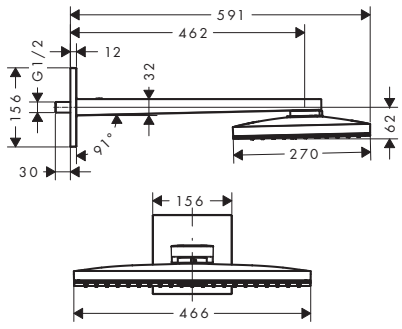			
Rainmaker Select Overhead shower 460 1jet with shower arm · shower head size: 466 x 270 mm · shower arm length: 461 mm · spray type: Rain · maximum flow rate at 0.3 MPa: 19 l/min · flow rate Rain spray (at 0.3 MPa): 19 l/min · easy cleanable glass spray disc · material spray disc: safety glass · spray disc removable for cleaning · overhead shower for cleaning removable · installation: wall · connection thread G ½ · connection dimension: DN15	White/Chrome Black/Chrome	24003400 24003600	1,583.30 1,583.30
Water saving EcoSmart version: · Rainmaker Select Overhead shower 460 1jet EcoSmart 9 l/min with shower arm	White/Chrome	24013400	1,583.30
Optional parts: · ShowerSelect Glass Thermostat for concealed installation for 2 functions · ShowerTablet Select Thermostat 700 universal for exposed installation for 2 functions	White/Chrome Black/Chrome Chrome White/Chrome	15738400 15738600 13184000 13184400	716.80 716.80 1,130.90 1,130.90

Measurements within scale drawings are in mm.

Technical specifications and units of measure are subject to change.

Overhead showers



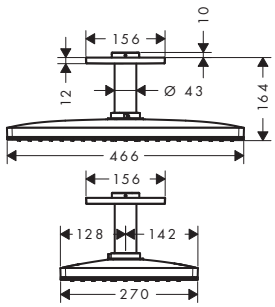

	finish	code no.	Euro
Rainmaker Select Overhead shower 460 1jet with ceiling connector · shower head size: 460 x 270 mm · spray type: Rain · flow rate Rain spray (at 0.3 MPa): 21 l/ min · easy cleanable glass spray disc · material spray disc: safety glass · spray disc removable for cleaning · overhead shower for cleaning removable · brass ceilling connector · ceiling connection length: 100 mm · installation: ceiling · connection dimension: DN15	White/Chrome Black/Chrome	24002400 24002600	1,470.30 1,470.30
Water saving EcoSmart version: · Rainmaker Select Overhead shower 460 1jet EcoSmart 9 l/ min with ceiling connector	White/Chrome	24012400	1,470.30
Required parts: · Rainmaker Select Basic set for overhead shower with ceiling connector		24010180	226.20
Optional parts:			
· ShowerSelect Glass Thermostat for concealed installation for 2 functions	White/Chrome Black/Chrome	15738400 15738600	716.80 716.80
· ShowerTablet Select Thermostat 700 universal for exposed installation for 2 functions	Chrome White/Chrome	13184000 13184400	1,130.90 1,130.90

Raindance Select E



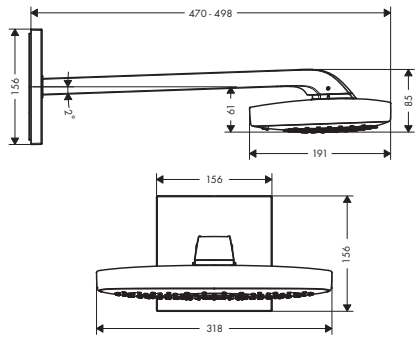

		code no.	Euro
Raindance Select E Overhead shower 300 3jet with shower arm · shower head size: 300 x 190 mm · shower arm length: 390 mm · spray type: RainAir, Rain, RainStream · maximum flow rate at 0.3 MPa: 22 l/ min · flow rate Rain spray (at 0.3 MPa): 18 l/ min · flow rate RainAir spray (at 0.3 MPa): 18 l/ min · flow rate RainStream spray (at 0.3 MPa): 22 l/ min · spray type alternation between Rain and RainAir: Select button on overhead shower · spray type RainStream: Select Button on installation for 3 functions thermostat · spray disc surface in two variants: chrome or white · material spray disc: metal · spray disc removable for cleaning · installation: wall-mounted - for installation on iBox	Chrome White/Chrome	26468000 26468400	762.60 762.60
Required parts: · Basic set iBox universal		01800180	130.80
Optional parts:			
· ShowerSelect Thermostat HighFlow for concealed installation	Chrome	15760000	382.90
· ShowerSelect Thermostat for concealed installation for 2 functions	Chrome	15763000	577.20
	NEW Brushed Bronze	15763140	866.30
	NEW Brushed Black Chrome	15763340	866.30
	NEW Matt Black	15763670	807.90
	NEW Matt White	15763700	807.90
	NEW Polished Gold Optic	15763990	866.30

Measurements within scale drawings are in mm.

Technical specifications and units of measure are subject to change.

	finish	code no.	Euro



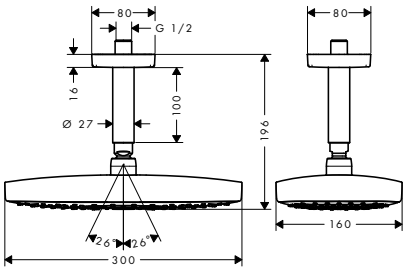

Raindance Select E Overhead shower 300 2jet with ceiling connector

- shower head size: 300 x 160 mm
- ball-joint: overhead shower angle adjustable
- spray type: Rain, RainAir
- flow rate Rain spray (at 0.3 MPa): 15 l/min
- flow rate RainAir spray (at 0.3 MPa): 15 l/min
- Select button on overhead shower
- spray disc surface in two variants: chrome or white
- material spray disc: metal
- spray disc removable for cleaning
- brass ceilling connector
- ceiling connection length: 100 mm
- installation: ceiling
- connection thread G ½
- connection dimension: DN15

Chrome	27384000	509.40
White/Chrome	27384400	509.40

Water saving EcoSmart version:

- Raindance Select E Overhead shower 300 2jet EcoSmart 9 l/min with ceiling connector

Chrome	26608000	509.40
White/Chrome	26608400	509.40



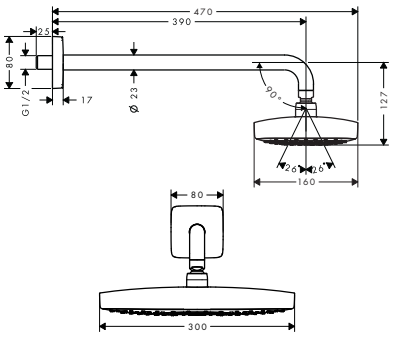

Raindance Select E Overhead shower 300 2jet with shower arm

- shower head size: 300 x 160 mm
- shower arm length: 390 mm
- ball-joint: overhead shower angle adjustable
- spray type: Rain, RainAir
- flow rate Rain spray (at 0.3 MPa): 15 l/min
- flow rate RainAir spray (at 0.3 MPa): 15 l/min
- Select button on overhead shower
- spray disc surface in two variants: chrome or white
- material spray disc: metal
- spray disc removable for cleaning
- installation: wall
- connection thread G ½
- connection dimension: DN15

Chrome	27385000	545.90
White/Chrome	27385400	545.90

Water saving EcoSmart version:

- Raindance Select E Overhead shower 300 2jet EcoSmart 9 l/min with shower arm

Chrome	26609000	545.90
White/Chrome	26609400	545.90

Measurements within scale drawings are in mm.

	finish	code no.	Euro
Raindance Select E Shower system for concealed installation with ShowerSelect thermostat · consists of: overhead shower, hand shower, shower thermostat, basic set, shower arm, shower holder, wall outlet, shower hose	Chrome	27296000	1,242.90



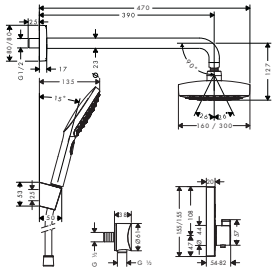

Consisting of:
· Raindance Select E Overhead shower 300 2jet with shower arm (# 27385XXX)
· Raindance Select E Hand shower 120 3jet (# 26520XXX)
· Isiflex Shower hose 125 cm (# 28272XXX)
· Shower holder Porter S (# 28331XXX)
· FixFit Wall outlet S without non-return valve (# 27453000)
· ShowerSelect Thermostat for concealed installation for 2 functions (# 15763XXX)
· Basic set iBox universal (# 01800180)

Raindance Select S

Raindance Select S Overhead shower 300 2jet with ceiling connector
· shower head size: 300 mm
· ball-joint: overhead shower angle adjustable
· spray type: Rain, RainAir
· flow rate Rain spray (at 0.3 MPa): 17 l/ min
· flow rate RainAir spray (at 0.3 MPa): 17 l/ min
· Select button on overhead shower
· spray disc surface in two variants: chrome or white
· material spray disc: metal
· spray disc removable for cleaning
· brass ceilling connector
· ceiling connection length: 100 mm
· installation: ceiling
· connection thread G ½
· connection dimension: DN15

Chrome	27337000	492.70
White/Chrome	27337400	492.70



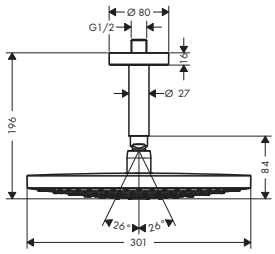

Raindance Select S Overhead shower 300 2jet with shower arm
· shower head size: 300 mm
· shower arm length: 390 mm
· ball-joint: overhead shower angle adjustable
· spray type: RainAir, Rain
· flow rate Rain spray (at 0.3 MPa): 17 l/ min
· flow rate RainAir spray (at 0.3 MPa): 17 l/ min
· Select button on overhead shower
· spray disc surface in two variants: chrome or white
· material spray disc: metal
· spray disc removable for cleaning
· installation: wall
· connection thread G ½
· connection dimension: DN15

Chrome	27378000	527.90
White/Chrome	27378400	527.90



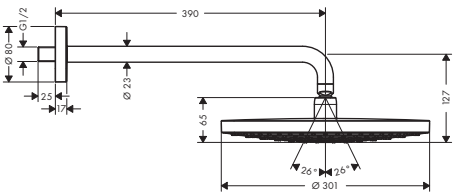

Measurements within scale drawings are in mm.

Technical specifications and units of measure are subject to change.

	finish	code no.	Euro



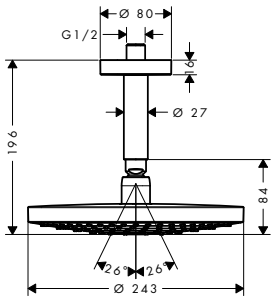

Raindance Select S Overhead shower 240 2jet with ceiling connector

- shower head size: 240 mm
- ball-joint: overhead shower angle adjustable
- spray type: RainAir, Rain
- flow rate Rain spray (at 0.3 MPa): 17 l/min
- flow rate RainAir spray (at 0.3 MPa): 17 l/min
- Select button on overhead shower
- spray disc surface in two variants: chrome or white
- material spray disc: metal
- spray disc removable for cleaning
- brass ceilling connector
- ceiling connection length: 100 mm
- installation: ceiling
- connection thread G ½
- connection dimension: DN15

Chrome	26467000	375.40
White/Chrome	26467400	375.40

Water saving EcoSmart version:

- Raindance Select S Overhead shower 240 2jet EcoSmart 9 l/min with ceiling connector

Chrome	26469000	375.40



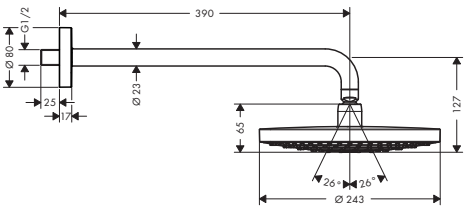

Raindance Select S Overhead shower 240 2jet with shower arm

- shower head size: 240 mm
- shower arm length: 390 mm
- ball-joint: overhead shower angle adjustable
- spray type: RainAir, Rain
- flow rate Rain spray (at 0.3 MPa): 17 l/min
- flow rate RainAir spray (at 0.3 MPa): 17 l/min
- Select button on overhead shower
- spray disc surface in two variants: chrome or white
- material spray disc: metal
- spray disc removable for cleaning
- installation: wall
- connection thread G ½
- connection dimension: DN15

Chrome	26466000	410.60
White/Chrome	26466400	410.60

Water saving EcoSmart version:

- Raindance Select S Overhead shower 240 2jet EcoSmart 9 l/min with shower arm

Chrome	26470000	410.60
White/Chrome	26470400	410.60

Measurements within scale drawings are in mm.

Technical specifications and units of measure are subject to change.

	finish	code no.	Euro
Raindance Select S Shower system for concealed installation with ShowerSelect S thermostat · consists of: overhead shower, hand shower, shower thermostat, basic set, shower arm, shower holder, wall outlet, shower hose	Chrome	27297000	1,118.50



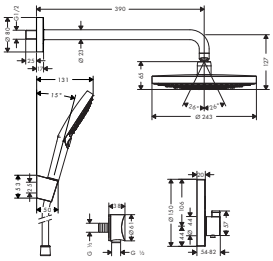

Consisting of:
- Raindance Select S Overhead shower 240 2jet with shower arm (# 26466XXX)
- Raindance Select S Hand shower 120 3jet (# 26530XXX)
- Isiflex Shower hose 125 cm (# 28272XXX)
- Shower holder Porter S (# 28331XXX)
- FixFit Wall outlet S without non-return valve (# 27453000)
- ShowerSelect S Thermostat for concealed installation for 2 functions (# 15743XXX)
- Basic set iBox universal (# 01800180)

Croma Select E



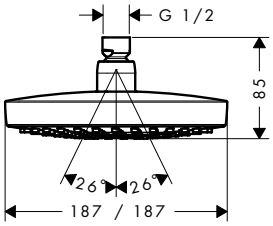

Croma Select E Overhead shower 180 2jet · shower head size: 180 x 180 mm · ball-joint: overhead shower angle adjustable · spray type: Rain, IntenseRain · flow rate Rain spray (at 0.3 MPa): 17 l/ min · flow rate IntenseRain spray (at 0.3 MPa): 16 l/ min · Select button on overhead shower · spray disc surface in two variants: chrome or white · material spray disc: plastic · connection thread G ½ · connection dimension: DN15	Chrome White/Chrome	26524000 26524400	231.80 231.80
Water saving EcoSmart version: · Croma Select E Overhead shower 180 2jet EcoSmart 9 l/ min	Chrome White/Chrome	26528000 26528400	231.80 231.80
Optional parts: · Shower arm E 38.9 cm · Ceiling connector E 10 cm	Chrome Chrome	27446000 27467000	80.50 54.30

Select · Quick Clean · XXL Performance

Croma Select E Shower system for concealed installation with Ecostat E thermostat · consists of: overhead shower, hand shower, shower thermostat, basic set, shower arm, shower holder, wall outlet, shower hose	Chrome	27294000	790.60



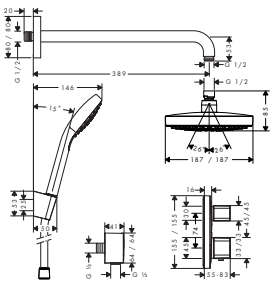

Consisting of:
- Croma Select E Overhead shower 180 2jet (# 26524XXX)
- Croma Select E Hand shower 1jet (# 26814400)
- Shower arm E 38.9 cm (# 27446000)
- Isiflex Shower hose 125 cm (# 28272XXX)
- Shower holder Porter S (# 28331XXX)
- FixFit Wall outlet with non-return valve (# 26457000)
- Ecostat E Thermostat for concealed installation for 2 functions (# 15708000)
- Basic set iBox universal (# 01800180)

Measurements within scale drawings are in mm.

Technical specifications and units of measure are subject to change.

Croma Select S



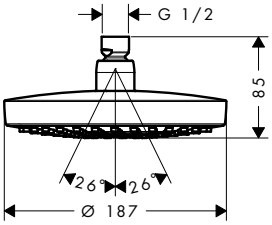

		finish	code no.	Euro
Croma Select S Overhead shower 180 2jet · shower head size: 180 mm · ball-joint: overhead shower angle adjustable · spray type: Rain, IntenseRain · flow rate Rain spray (at 0.3 MPa): 17 l/ min · flow rate IntenseRain spray (at 0.3 MPa): 16 l/ min · Select button on overhead shower · spray disc surface in two variants: chrome or white · material spray disc: plastic · installation: ceiling or wall · connection thread G ½ · connection dimension: DN15		Chrome White/Chrome	26522000 26522400	231.80 231.80
Water saving EcoSmart version: · Croma Select S Overhead shower 180 2jet EcoSmart 9 l/ min		Chrome White/Chrome	26523000 26523400	231.80 231.80
Optional parts:				
· Shower arm 38.9 cm		Chrome	27413000	80.50
	NEW	Brushed Bronze*	27413140	120.80
	NEW	Brushed Black Chrome*	27413340	120.80
	NEW	Matt Black*	27413670	112.70
	NEW	Matt White*	27413700	112.70
	NEW	Polished Gold Optic*	27413990	120.80
· Ceiling connector 10 cm		Chrome	27479000	54.30

***available from April 2020**

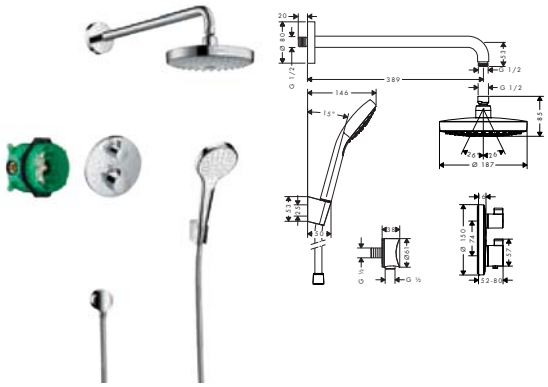

Croma Select S Shower system for concealed installation with Ecostat S thermostat · consists of: overhead shower, hand shower, shower thermostat, basic set, shower arm, shower holder, wall outlet, shower hose		Chrome	27295000	790.60
Consisting of: · Croma Select S Overhead shower 180 2jet (# 26522XXX) · Shower arm 38.9 cm (# 27413XXX) · Croma Select S Hand shower 1jet (# 26804400) · Isiflex Shower hose 125 cm (# 28272XXX) · Shower holder Porter S (# 28331XXX) · FixFit Wall outlet S without non-return valve (# 27453000) · Ecostat S Thermostat for concealed installation for 2 functions (# 15758XXX) · Basic set iBox universal (# 01800180)				

PuraVida



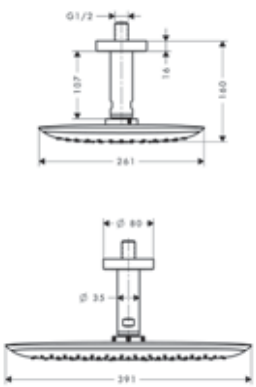

PuraVida Overhead shower 400 1jet with ceiling connector · shower head size: 390 x 260 mm · ball-joint: overhead shower angle adjustable · spray type: RainAir · flow rate RainAir spray (at 0.3 MPa): 21 l/ min · spray disc surface in two variants: chrome or white · material spray disc: metal · ceiling connection length: 100 mm · installation: ceiling · connection thread G ½ · connection dimension: DN15		Chrome White/Chrome	27390000 27390400	1,132.40 1,132.40
Optional parts:				
· PuraVida Thermostat for concealed installation with shut-off/ diverter valve		Chrome White/Chrome	15771000 15771400	1,163.60 1,163.60

Measurements within scale drawings are in mm.

Overhead showers

	finish	code no.	Euro
			
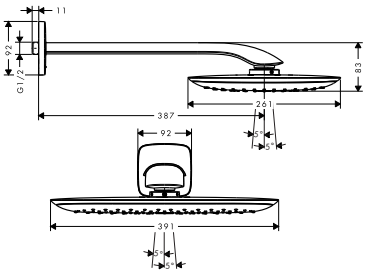	**PuraVida Overhead shower 400 1jet with shower arm** · shower head size: 390 x 260 mm · shower arm length: 390 mm · spray type: RainAir · flow rate RainAir spray (at 0.3 MPa): 21 l/ min · spray disc surface in two variants: chrome or white · material spray disc: metal · installation: wall · connection thread G ½ · connection dimension: DN15	Chrome White/Chrome	27437000 27437400	1,221.70 1,221.70
	Optional parts: · PuraVida Thermostat for concealed installation with shut-off/ diverter valve	Chrome White/Chrome	15771000 15771400	1,163.60 1,163.60

Raindance Rainmaker

	**Raindance Rainmaker Overhead shower 680/460 3jet with lighting** · shower head size: 680 x 460 mm · spray type: RainAir, Whirl, RainAir XL · flow rate RainAir spray (at 0.3 MPa): 20 l/ min · flow rate RainAir XL (at 0.3 MPa): 24 l/ min · flow rate WhirlAir spray (at 0.3 MPa): 22 l/ min · the 3 spray zones must be controlled via 3 valves or a diverter valve with 3 outlets · fully chrome-plated spray disc · material spray disc: metal · installation: installation type:flush with the ceiling on basic body · connection dimension: DN20 · with integrated lighting · illuminant: LED · power supply: 12 V - DC · transformer power supply for concealed installation 12 V, 18 W · input voltage: 100 - 240 V AC / 50 / 60 Hz · output voltage: 12 V - DC · colour temperature: 2700 K · energy efficiency label: C · TÜV certified	Chrome	28418000	4,838.60
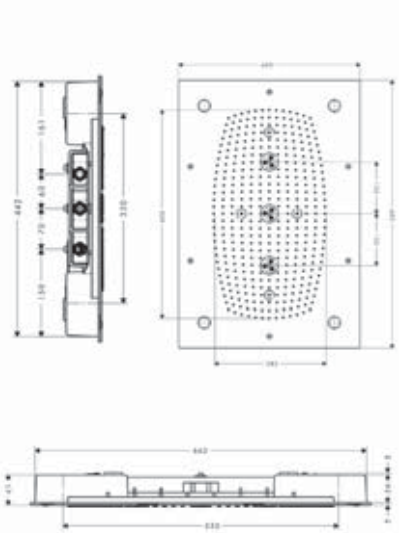	**Alternative products:** · Raindance Rainmaker Overhead shower 680/460 3jet without lighting	Chrome	28417000	4,057.50
	Required parts: · Raindance Rainmaker Basic set for overhead shower 680/460 3jet		28414180	118.40
	Optional parts: · ShowerSelect Thermostat HighFlow for concealed installation for 1 function and additional outlet	Chrome	15761000	530.00
	· ShowerSelect Valve for concealed installation for 3 functions	Chrome	15764000	382.90
 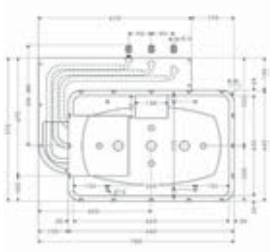	**Raindance Rainmaker Basic set for overhead shower 680/460 3jet**		28414180	118.40
	Optional parts: · Raindance Rainmaker Overhead shower 680/460 3jet with lighting	Chrome	28418000	4,838.60
	· Raindance Rainmaker Overhead shower 680/460 3jet without lighting	Chrome	28417000	4,057.50

Measurements within scale drawings are in mm.

Technical specifications and units of measure are subject to change.

	finish	code no.	Euro
Raindance Rainmaker Overhead shower 600 3jet with lighting · shower head size: 600 mm · spray type: RainAir, Whirl, RainAir XL · flow rate RainAir spray (at 0.3 MPa): 20.5 l/ min · flow rate RainAir XL (at 0.3 MPa): 25 l/ min · flow rate WhirlAir spray (at 0.3 MPa): 20.5 l/ min · the 3 spray zones must be controlled via 3 valves or a diverter valve with 3 outlets · fully chrome-plated spray disc · material spray disc: metal · installation: installation type:flush with the ceiling on basic body · connection dimension: DN20 · with integrated lighting · illuminant: LED · power supply: 12 V - DC · transformer power supply for concealed installation 12 V, 18 W · input voltage: 100 - 240 V AC / 50 / 60 Hz · output voltage: 12 V - DC · colour temperature: 2700 K · energy efficiency label: C · TÜV certified	Chrome	26117000	4,839.20
Alternative products:			
· Raindance Rainmaker Overhead shower 600 3jet without lighting	Chrome	26115000	4,057.60
Required parts:			
· Raindance Rainmaker Basic set for overhead shower 600 3jet		28412180	114.20
Optional parts:			
· ShowerSelect S Valve for concealed installation for 3 functions	Chrome	15745000	382.90
· ShowerSelect S Thermostat HighFlow for concealed installation for 1 function and additional outlet	Chrome	15742000	530.00



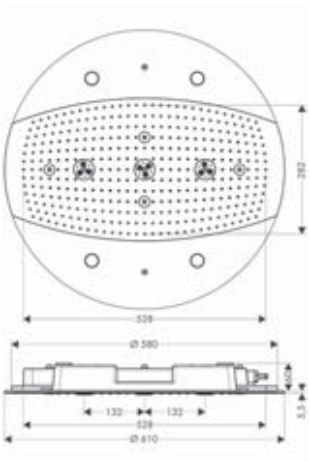

Raindance Rainmaker Basic set for overhead shower 600 3jet		28412180	114.20
Optional parts:			
· Raindance Rainmaker Overhead shower 600 3jet with lighting	Chrome	26117000	4,839.20
· Raindance Rainmaker Overhead shower 600 3jet without lighting	Chrome	26115000	4,057.60



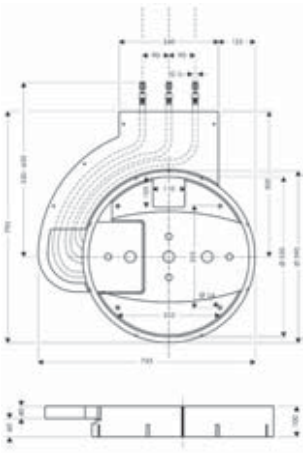

Measurements within scale drawings are in mm.

Technical specifications and units of measure are subject to change.

Raindance 260 x 260 mm overhead shower for concealed installation

		finish	code no.	Euro
Raindance Overhead shower 260/260 1jet		Chrome	26472000	410.60
· shower head size: 260 mm · spray type: RainAir · flow rate RainAir spray (at 0.3 MPa): 15 l/ min · fully chrome-plated spray disc · material spray disc: metal · spray disc removable for cleaning · installation: flush with the ceiling · connection thread G ½ · connection dimension: DN15				
Water saving EcoSmart version:				
· Raindance Overhead shower 260/260 1jet EcoSmart 9 l/ min		Chrome	26481000	410.60
Required parts:				
· Raindance Basic set for overhead shower 260/260 1jet			26471180	93.90
Optional parts:				
· ShowerSelect Thermostat for concealed installation for 2 functions		Chrome	15763000	577.20
	NEW	Brushed Bronze	15763140	866.30
	NEW	Brushed Black Chrome	15763340	866.30
	NEW	Matt Black	15763670	807.90
	NEW	Matt White	15763700	807.90
	NEW	Polished Gold Optic	15763990	866.30



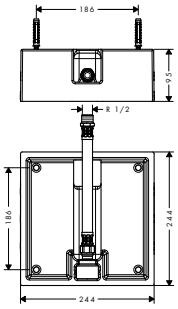

Raindance Basic set for overhead shower 260/260 1jet		26471180	93.90
Optional parts:			
· Raindance Overhead shower 260/260 1jet	Chrome	26472000	410.60
· Raindance Overhead shower 260/260 1jet EcoSmart 9 l/ min	Chrome	26481000	410.60

Raindance Rainfall



Raindance Rainfall Overhead shower 180 2jet	Chrome	28433000	1,295.60
	White/Chrome	28433400	1,295.60
· shower head size: 180 mm · spray type: RainAir, wide flood jet · flow rate RainAir spray (at 0.3 MPa): 17 l/ min · flow rate RainFlow spray (at 0.3 MPa): 24 l/ min · the 2 spray zones must be controlled via 2 valves or a diverter valve with 2 outlets · spray disc surface in two variants: chrome or white · material spray disc: metal · installation: wall-mounted - for installation on iBox · connection dimension: DN15			
Required parts:			
· Basic set iBox universal		01800180	130.80
Optional parts:			
· ShowerSelect Thermostat HighFlow for concealed installation	Chrome	15760000	382.90
· ShowerSelect Valve for concealed installation for 3 functions	Chrome	15764000	382.90

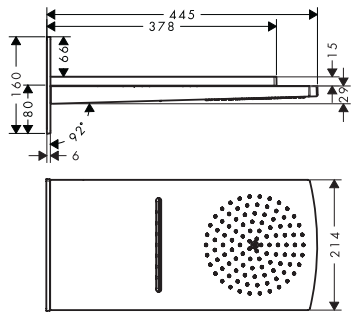

Measurements within scale drawings are in mm.

Technical specifications and units of measure are subject to change.

	finish	code no.	Euro



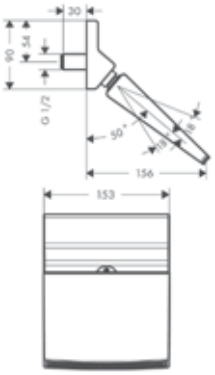

Raindance Rainfall Overhead shower 150 1jet stream
- shower head size: 150 mm
- ball-joint: overhead shower angle adjustable
- spray type: Stream
- flow rate RainStream spray (at 0.3 MPa): 18 l/min
- installation: wall
- connection thread G ½
- connection dimension: DN15

Chrome 26443000 254.70

XXL Performance

Optional parts:
- ShowerSelect Thermostat for concealed installation for 1 function

Chrome 15762000 530.00



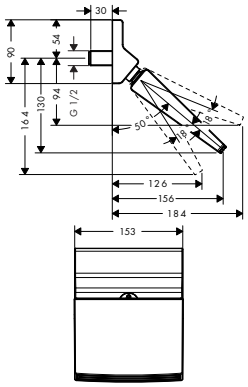

Raindance Rainfall Overhead shower 150 1jet
- shower head size: 150 mm
- ball-joint: overhead shower angle adjustable
- spray type: wide flood jet
- flow rate RainFlow spray (at 0.3 MPa): 18 l/min
- installation: wall
- connection thread G ½
- connection dimension: DN15

Chrome 26442000 254.70

XXL Performance

Optional parts:
- ShowerSelect Thermostat for concealed installation for 1 function

Chrome 15762000 530.00

Raindance E



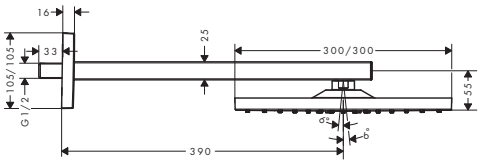

Raindance E Overhead shower 300 1jet with shower arm
- shower head size: 300 x 300 mm
- shower arm length: 390 mm
- ball-joint: overhead shower angle adjustable
- spray type: RainAir
- flow rate RainAir spray (at 0.3 MPa): 17 l/min
- fully chrome-plated spray disc
- material spray disc: metal
- spray disc removable for cleaning
- installation: wall
- connection thread G ½
- connection dimension: DN15

	Chrome	26238000	521.60
NEW	Brushed Bronze	26238140	782.30
NEW	Brushed Black	26238340	782.30
	Chrome		
NEW	Matt Black	26238670	730.10
NEW	Matt White	26238700	730.10
NEW	Polished Gold Optic	26238990	782.30

Air Power · Quick Clean · XXL Performance

Water saving EcoSmart version:
- Raindance E Overhead shower 300 1jet EcoSmart 9 l/min with shower arm

Chrome 26239000 521.60

Measurements within scale drawings are in mm.

Technical specifications and units of measure are subject to change.

	finish	code no.	Euro
Raindance E Overhead shower 300 1jet with ceiling connector	Chrome	26250000	490.00
	NEW Brushed Bronze	26250140	735.20
	NEW Brushed Black Chrome	26250340	735.20
	NEW Matt Black	26250670	686.10
	NEW Matt White	26250700	686.10
	NEW Polished Gold Optic	26250990	735.20



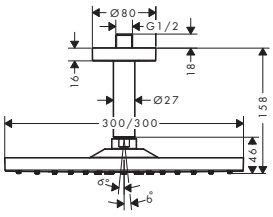

- shower head size: 300 x 300 mm
- ball-joint: overhead shower angle adjustable
- spray type: RainAir
- flow rate RainAir spray (at 0.3 MPa): 17 l/min
- material spray disc: metal
- spray disc removable for cleaning
- brass ceilling connector
- ceiling connection length: 158 mm
- installation: ceiling
- connection thread G ½
- connection dimension: DN15

Air Power · Quick Clean · XXL Performance

Water saving EcoSmart version:

- Raindance E Overhead shower 300 1jet EcoSmart 9 l/min with ceiling connector — Chrome — 26251000 — 490.00



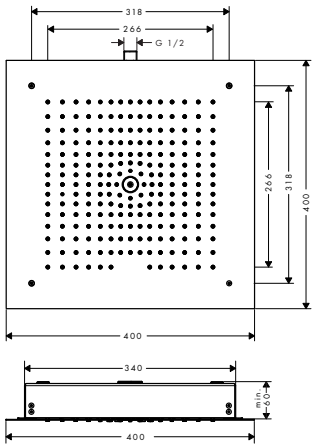

Raindance E Overhead shower 400/400 1jet — Chrome — 26252000 — 790.30

Air Power · Quick Clean · XXL Performance

- shower head size: 400 x 400 mm
- spray type: RainAir
- flow rate RainAir spray (at 0.3 MPa): 20 l/min
- fully chrome-plated spray disc
- material spray disc: metal
- installation: flush with the ceiling
- connection thread G ½
- connection dimension: DN15

Water saving EcoSmart version:

- Raindance E Overhead shower 400/400 1jet EcoSmart 9 l/min — Chrome — 26253000 — 790.30

Required parts:

- Raindance E Basic set for overhead shower 400/400 1jet — Chrome — 26254180 — 115.90



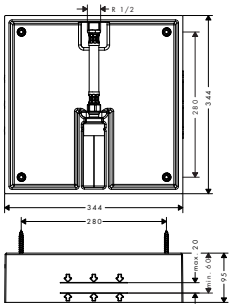

Raindance E Basic set for overhead shower 400/400 1jet — Chrome — 26254180 — 115.90

Optional parts:

- Raindance E Overhead shower 400/400 1jet — Chrome — 26252000 — 790.30
- Raindance E Overhead shower 400/400 1jet EcoSmart 9 l/min — Chrome — 26253000 — 790.30



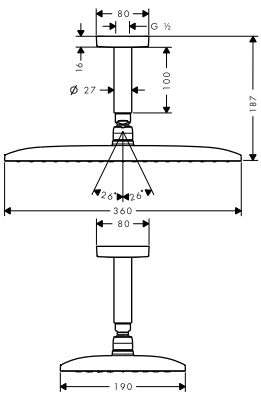

Raindance E Overhead shower 360 1jet with ceiling connector — Chrome — 27381000 — 587.90

Air Power · Quick Clean · XXL Performance

- shower head size: 360 x 190 mm
- ball-joint: overhead shower angle adjustable
- spray type: RainAir
- flow rate RainAir spray (at 0.3 MPa): 16 l/min
- fully chrome-plated spray disc
- material spray disc: metal
- spray disc removable for cleaning
- ceiling connection length: 100 mm
- installation: ceiling
- connection thread G ½
- connection dimension: DN15

Water saving EcoSmart version:

- Raindance E Overhead shower 360 1jet EcoSmart 9 l/min with ceiling connector — Chrome — 26604000 — 587.90

Measurements within scale drawings are in mm.

Technical specifications and units of measure are subject to change.

	finish	code no.	Euro
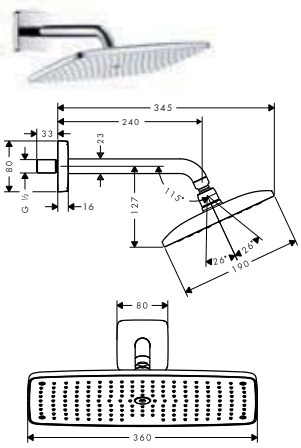	**Raindance E Overhead shower 360 1jet with shower arm 24 cm** · shower head size: 360 x 190 mm · shower arm length: 240 mm · ball-joint: overhead shower angle adjustable · spray type: RainAir · flow rate RainAir spray (at 0.3 MPa): 17 l/min · fully chrome-plated spray disc · material spray disc: metal · spray disc removable for cleaning · installation: wall · connection thread G ½ · connection dimension: DN15	Chrome	27371000	625.80
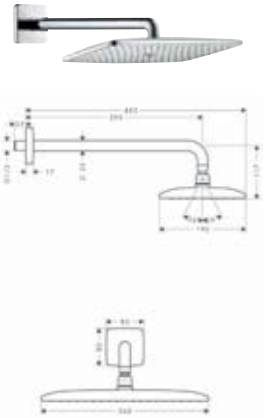	**Raindance E Overhead shower 360 1jet with shower arm 39 cm** · shower head size: 360 x 190 mm · shower arm length: 390 mm · ball-joint: overhead shower angle adjustable · spray type: RainAir · flow rate RainAir spray (at 0.3 MPa): 17 l/min · fully chrome-plated spray disc · material spray disc: metal · installation: wall · connection thread G ½ · connection dimension: DN15	Chrome	27376000	621.70
	Water saving EcoSmart version: · Raindance E Overhead shower 360 1jet EcoSmart 9 l/min with shower arm	Chrome	26605000	621.70
 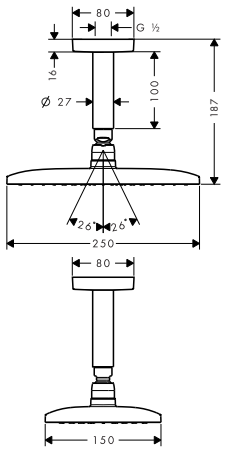	**Raindance E Overhead shower 240 1jet with ceiling connector** · shower head size: 250 x 150 mm · ball-joint: overhead shower angle adjustable · spray type: RainAir · flow rate RainAir spray (at 0.3 MPa): 20 l/min · fully chrome-plated spray disc · material spray disc: metal · spray disc removable for cleaning · ceiling connection length: 100 mm · installation: ceiling · connection thread G ½ · connection dimension: DN15	Chrome	27380000	479.30
	Water saving EcoSmart version: · Raindance E Overhead shower 240 1jet EcoSmart 9 l/min with ceiling connector	Chrome	27383000	483.80
 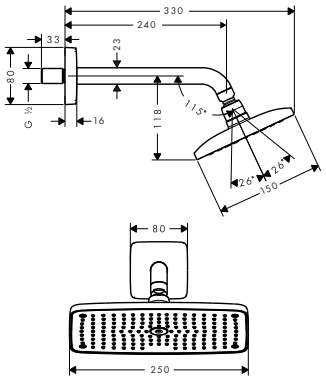	**Raindance E Overhead shower 240 1jet with shower arm** · shower head size: 250 x 150 mm · shower arm length: 240 mm · ball-joint: overhead shower angle adjustable · spray type: RainAir · flow rate RainAir spray (at 0.3 MPa): 18 l/min · fully chrome-plated spray disc · material spray disc: metal · spray disc removable for cleaning · installation: wall · connection thread G ½ · connection dimension: DN15	Chrome	27370000	517.40
	Water saving EcoSmart version: · Raindance E Overhead shower 240 1jet EcoSmart 9 l/min with shower arm	Chrome	27375000	522.00

Measurements within scale drawings are in mm.

Technical specifications and units of measure are subject to change.

Raindance S

	finish	code no.	Euro
 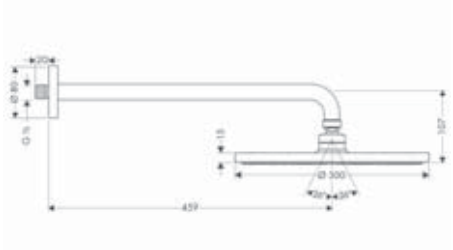	**Raindance S Overhead shower 300 1jet with shower arm 46 cm** · shower head size: 300 mm · shower arm length: 460 mm · ball-joint: overhead shower angle adjustable · spray type: RainAir · flow rate RainAir spray (at 0.3 MPa): 18 l/ min · fully chrome-plated spray disc · material spray disc: metal · installation: wall · connection thread G ½ · connection dimension: DN15	Chrome	27492000	690.80
 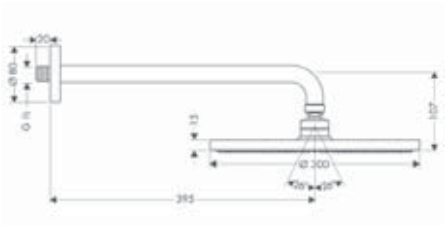	**Raindance S Overhead shower 300 1jet with shower arm 39 cm** · shower head size: 300 mm · shower arm length: 390 mm · ball-joint: overhead shower angle adjustable · spray type: RainAir · flow rate RainAir spray (at 0.3 MPa): 18 l/ min · fully chrome-plated spray disc · material spray disc: metal · installation: wall · connection thread G ½ · connection dimension: DN15	Chrome	27493000	667.40
	Water saving EcoSmart version: · Raindance S Overhead shower 300 1jet EcoSmart 9 l/ min with shower arm	Chrome	26601000	667.40
 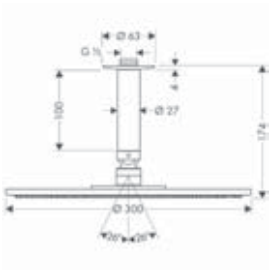	**Raindance S Overhead shower 300 1jet with ceiling connector** · shower head size: 300 mm · ball-joint: overhead shower angle adjustable · spray type: RainAir · flow rate RainAir spray (at 0.3 MPa): 20 l/ min · fully chrome-plated spray disc · material spray disc: metal · ceiling connection length: 100 mm · installation: ceiling · connection thread G ½ · connection dimension: DN15	Chrome	27494000	630.70
	Water saving EcoSmart version: · Raindance S Overhead shower 300 1jet EcoSmart 9 l/ min with ceiling connector	Chrome	26600000	630.70

Measurements within scale drawings are in mm.

Technical specifications and units of measure are subject to change.

	finish	code no.	Euro
 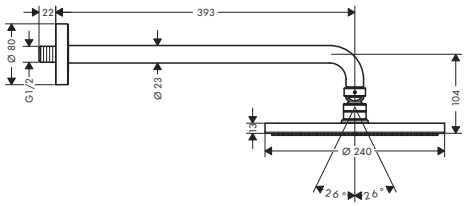			
Raindance S Overhead shower 240 1jet PowderRain with shower arm · shower head size: 240 mm · shower arm length: 390 mm · ball-joint: overhead shower angle adjustable · spray type: PowderRain · flow rate PowderRain spray (at 0.3 MPa): 18 l/min · fully chrome-plated spray disc · material spray disc: metal · installation: wall · connection thread G ½ · connection dimension: DN15	Chrome	27607000	399.40
Alternative products:			
· Raindance S Overhead shower 240 1jet PowderRain with ceiling connector	Chrome	27620000	368.60
· Raindance S Overhead shower 240 1jet PowderRain	Chrome	27623000	337.90
 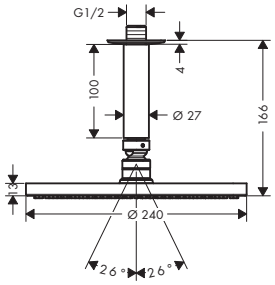			
Raindance S Overhead shower 240 1jet PowderRain with ceiling connector · shower head size: 240 mm · ball-joint: overhead shower angle adjustable · spray type: PowderRain · flow rate PowderRain spray (at 0.3 MPa): 18 l/min · fully chrome-plated spray disc · material spray disc: metal · ceiling connection length: 100 mm · installation: ceiling · connection thread G ½ · connection dimension: DN15	Chrome	27620000	368.60
Alternative products:			
· Raindance S Overhead shower 240 1jet PowderRain with shower arm	Chrome	27607000	399.40
· Raindance S Overhead shower 240 1jet PowderRain	Chrome	27623000	337.90

Measurements within scale drawings are in mm.

	finish	code no.	Euro
Raindance S Overhead shower 240 1jet PowderRain · shower head size: 240 mm · ball-joint: overhead shower angle adjustable · spray type: PowderRain · flow rate PowderRain spray (at 0.3 MPa): 18 l/min · fully chrome-plated spray disc · material spray disc: metal · installation: ceiling or wall · connection thread G ½ · connection dimension: DN15	Chrome	27623000	337.90
Alternative products:			
· Raindance S Overhead shower 240 1jet PowderRain with shower arm	Chrome	27607000	399.40
· Raindance S Overhead shower 240 1jet PowderRain with ceiling connector	Chrome	27620000	368.60
Optional parts:			
· Shower arm 38.9 cm	Chrome	27413000	80.50
	NEW Brushed Bronze*	27413140	120.80
	NEW Brushed Black Chrome*	27413340	120.80
	NEW Matt Black*	27413670	112.70
	NEW Matt White*	27413700	112.70
	NEW Polished Gold Optic*	27413990	120.80
· Ceiling connector 10 cm	Chrome	27479000	54.30

***available from April 2020**

Raindance S Overhead shower 240 1jet with shower arm · shower head size: 240 mm · shower arm length: 390 mm · ball-joint: overhead shower angle adjustable · spray type: RainAir · flow rate RainAir spray (at 0.3 MPa): 18 l/min · fully chrome-plated spray disc · material spray disc: metal · installation: wall · connection thread G ½ · connection dimension: DN15	Chrome	27474000	556.80
Consisting of: · Shower arm 38.9 cm (# 27413XXX)			
Water saving EcoSmart version:			
· Raindance S Overhead shower 240 1jet EcoSmart 9 l/min with shower arm	Chrome	27461000	561.50

Raindance S Overhead shower 240 1jet with ceiling connector · shower head size: 240 mm · ball-joint: overhead shower angle adjustable · spray type: RainAir · flow rate RainAir spray (at 0.3 MPa): 18 l/min · fully chrome-plated spray disc · material spray disc: metal · ceiling connection length: 100 mm · installation: ceiling · connection thread G ½ · connection dimension: DN15	Chrome	27477000	517.10
Water saving EcoSmart version:			
· Raindance S Overhead shower 240 1jet EcoSmart 9 l/min with ceiling connector	Chrome	27463000	521.70

Measurements within scale drawings are in mm.

Technical specifications and units of measure are subject to change.

	finish	code no.	Euro



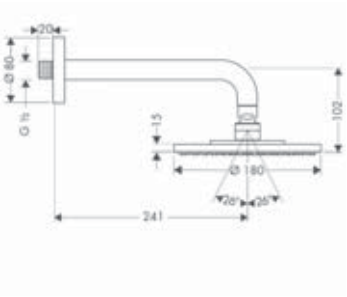

Raindance S Overhead shower 180 1jet with shower arm 24 cm
- shower head size: 180 mm
- shower arm length: 240 mm
- ball-joint: overhead shower angle adjustable
- spray type: RainAir
- flow rate RainAir spray (at 0.3 MPa): 18 l/min
- fully chrome-plated spray disc
- material spray disc: metal
- installation: wall
- connection thread G ½
- connection dimension: DN15

Chrome — 27476000 — 429.60

Air Power · Quick Clean · XXL Performance

Water saving EcoSmart version:
- Raindance S Overhead shower 180 1jet EcoSmart 9 l/min with shower arm

Chrome — 27462000 — 434.30



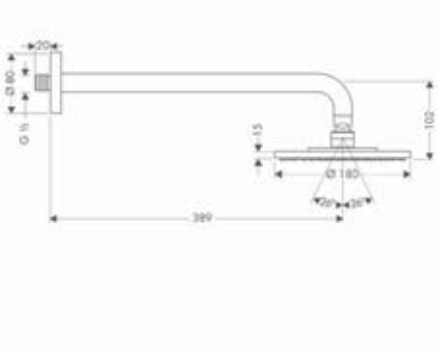

Raindance S Overhead shower 180 1jet with shower arm 39 cm
- shower arm length: 390 mm
- ball-joint: overhead shower angle adjustable
- spray type: RainAir
- flow rate RainAir spray (at 0.3 MPa): 18 l/min
- fully chrome-plated spray disc
- material spray disc: metal
- installation: wall
- connection thread G ½
- connection dimension: DN15

Chrome — 27468000 — 453.40

Air Power · Quick Clean · XXL Performance



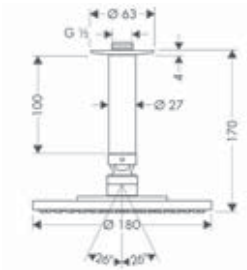

Raindance S Overhead shower 180 1jet with ceiling connector
- shower head size: 180 mm
- ball-joint: overhead shower angle adjustable
- spray type: RainAir
- flow rate RainAir spray (at 0.3 MPa): 18 l/min
- fully chrome-plated spray disc
- material spray disc: metal
- ceiling connection length: 100 mm
- connection thread G ½
- connection dimension: DN15

Chrome — 27478000 — 389.90

Air Power · Quick Clean · XXL Performance

Water saving EcoSmart version:
- Raindance S Overhead shower 180 1jet EcoSmart 9 l/min with ceiling connector

Chrome — 27464000 — 394.60

Raindance Classic



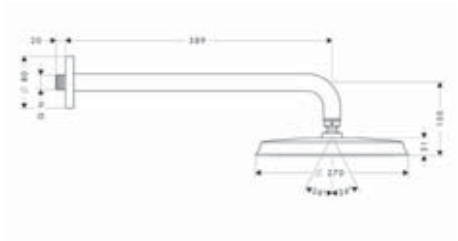

Raindance Classic Overhead shower 240 1jet with shower arm
- shower head size: 240 mm
- shower arm length: 390 mm
- ball-joint: overhead shower angle adjustable
- spray type: RainAir
- flow rate RainAir spray (at 0.3 MPa): 19 l/min
- fully chrome-plated spray disc
- material spray disc: metal
- installation: wall
- connection thread G ½
- connection dimension: DN15

Chrome — 27424000 — 653.10
Chrome/Gold Optic — 27424090 — 816.30

Air Power · Quick Clean · XXL Performance

Measurements within scale drawings are in mm.

Technical specifications and units of measure are subject to change.

	finish	code no.	Euro
Raindance Classic Overhead shower 240 1jet with ceiling connector	Chrome	27405000	614.00
	Chrome/Gold Optic	27405090	767.50



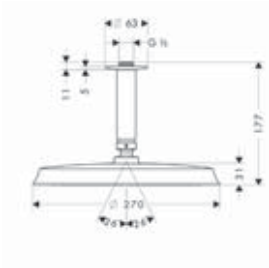

- shower head size: 240 mm
- ball-joint: overhead shower angle adjustable
- spray type: RainAir
- flow rate RainAir spray (at 0.3 MPa): 19 l/ min
- fully chrome-plated spray disc
- material spray disc: metal
- ceiling connection length: 100 mm
- installation: ceiling
- connection thread G ½
- connection dimension: DN15

Croma E

NEW

Croma E Overhead shower 280 1jet — Chrome — 26257000 — 315.00



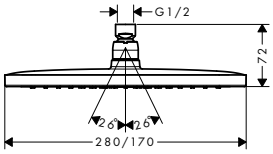

- shower head size: 280 mm
- ball-joint: overhead shower angle adjustable
- spray type: RainAir
- maximum flow rate at 0.3 MPa: 18.3 l/ min
- flow rate RainAir spray (at 0.3 MPa): 18 l/ min
- fully chrome-plated spray disc
- material spray disc: metal
- spray disc removable for cleaning
- installation: ceiling or wall
- connection thread G ½
- connection dimension: DN15

Water saving EcoSmart version:

NEW

- Croma E Overhead shower 280 1jet EcoSmart — Chrome — 26258000 — 315.00

Optional parts:

- Ceiling connector E 30 cm — Chrome — 27388000 — 73.50
- Ceiling connector E 10 cm — Chrome — 27467000 — 54.30
- Shower arm E 38.9 cm — Chrome — 27446000 — 80.50

Croma

Croma Overhead shower 280 1jet



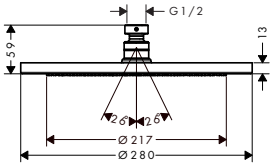

- shower head size: 280 mm
- ball-joint: overhead shower angle adjustable
- spray type: RainAir
- flow rate RainAir spray (at 0.3 MPa): 15 l/ min
- fully chrome-plated spray disc
- material spray disc: metal
- spray disc removable for cleaning
- installation: ceiling or wall
- connection thread G ½
- connection dimension: DN15

Chrome		26220000	315.40
NEW	Brushed Bronze*	26220140	473.10
NEW	Brushed Black Chrome*	26220340	473.10
NEW	Matt Black*	26220670	441.30
NEW	Matt White*	26220700	441.30
NEW	Polished Gold Optic*	26220990	473.10

Water saving EcoSmart version:

- Croma Overhead shower 280 1jet EcoSmart 9 l/ min

Chrome		26221000	317.40
NEW	Brushed Bronze*	26221140	476.10
NEW	Brushed Black Chrome*	26221340	476.10
NEW	Matt Black*	26221670	444.40
NEW	Matt White*	26221700	444.40
NEW	Polished Gold Optic*	26221990	476.10

Optional parts:

- Shower arm 38.9 cm

Chrome		27413000	80.50
NEW	Brushed Bronze*	27413140	120.80
NEW	Brushed Black Chrome*	27413340	120.80
NEW	Matt Black*	27413670	112.70
NEW	Matt White*	27413700	112.70
NEW	Polished Gold Optic*	27413990	120.80

- Ceiling connector 10 cm — Chrome — 27479000 — 54.30

***available from April 2020**

Measurements within scale drawings are in mm.

Technical specifications and units of measure are subject to change.

	finish	code no.	Euro
Croma Overhead shower 220 1jet · shower head size: 220 mm · ball-joint: overhead shower angle adjustable · spray type: RainAir · flow rate RainAir spray (at 0.3 MPa): 19 l/ min · fully chrome-plated spray disc · material spray disc: metal · spray disc removable for cleaning · installation: ceiling or wall · connection thread G ½ · connection dimension: DN15	Chrome	26464000	218.20
Water saving EcoSmart version: · Croma Overhead shower 220 1jet EcoSmart 9 l/ min	Chrome	26465000	218.20
Alternative products: · Croma Overhead shower 220 1jet LowPressure	Chrome	26734000	218.20
Optional parts:			
· Shower arm 38.9 cm	Chrome	27413000	80.50
	NEW Brushed Bronze*	27413140	120.80
	NEW Brushed Black Chrome*	27413340	120.80
	NEW Matt Black*	27413670	112.70
	NEW Matt White*	27413700	112.70
	NEW Polished Gold Optic*	27413990	120.80
· Ceiling connector 10 cm	Chrome	27479000	54.30

***available from April 2020**

Croma Overhead shower 160 1jet · shower head size: 160 mm · ball-joint: overhead shower angle adjustable · spray type: Rain · flow rate Rain spray (at 0.3 MPa): 17 l/ min · fully chrome-plated spray disc · material spray disc: plastic · installation: ceiling or wall · connection thread G ½ · connection dimension: DN15	Chrome	27450000	195.10
Optional parts:			
· Shower arm 23 cm	Chrome	27412000	57.00
· Ceiling connector 10 cm	Chrome	27479000	54.30

Croma 100 Overhead shower Multi · shower head size: 100 mm · ball-joint: overhead shower angle adjustable · spray type: Rain, MonoRain, Massage spray · flow rate Rain spray (at 0.3 MPa): 20 l/ min · flow rate Mono spray (at 0.3 MPa): 15 l/ min · flow rate massage spray (at 0.3 MPa): 14 l/ min · adjustment with shift on overhead shower · grey spray disc · material spray disc: plastic · installation: ceiling or wall · connection thread G ½ · connection dimension: DN15	Chrome	27443000	75.00
Optional parts:			
· Shower arm 12.8 cm	Chrome	27411000	20.80

Measurements within scale drawings are in mm.

Technical specifications and units of measure are subject to change.

Overhead showers

	finish	code no.	Euro
 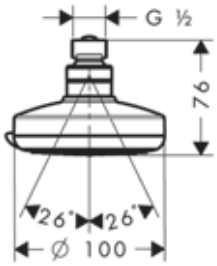	**Croma 100 Overhead shower Vario** · shower head size: 100 mm · ball-joint: overhead shower angle adjustable · spray type: Rain, Shampoo spray, normal spray, Massage spray · flow rate Rain spray (at 0.3 MPa): 22 l/ min · flow rate shampoo spray (at 0.3 MPa): 17 l/ min · flow rate normal spray (at 0.3 MPa): 20 l/ min · flow rate massage spray (at 0.3 MPa): 11 l/ min · adjustment with shift on overhead shower · grey spray disc · material spray disc: plastic · installation: ceiling or wall · connection thread G ½ · connection dimension: DN15	Chrome	27441000	48.00
	Water saving EcoSmart version: · Croma 100 Overhead shower Vario EcoSmart 9 l/ min	Chrome	28462000	54.90
	Optional parts: · Shower arm 12.8 cm	Chrome	27411000	20.80

Crometta E

 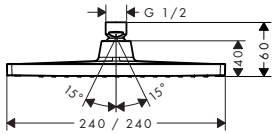	**Crometta E Overhead shower 240 1jet** · shower head size: 240 x 240 mm · ball-joint: overhead shower angle adjustable · spray type: Rain · flow rate Rain spray (at 0.3 MPa): 18 l/ min · fully chrome-plated spray disc · material spray disc: plastic · installation: ceiling or wall · connection thread G ½ · connection dimension: DN15	Chrome	26726000	195.80
	Water saving EcoSmart version: · Crometta E Overhead shower 240 1jet EcoSmart 9 l/ min	Chrome	26727000	197.90
	Alternative products: · Crometta E Overhead shower 240 1jet LowPressure	Chrome	26722000	195.80
	Optional parts: · Shower arm E 38.9 cm · Ceiling connector E 10 cm	Chrome Chrome	27446000 27467000	80.50 54.30

Measurements within scale drawings are in mm.

Technical specifications and units of measure are subject to change.

Crometta S



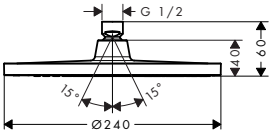

		finish	code no.	Euro
Crometta S Overhead shower 240 1jet · shower head size: 240 mm · ball-joint: overhead shower angle adjustable · spray type: Rain · flow rate Rain spray (at 0.3 MPa): 18 l/ min · fully chrome-plated spray disc · material spray disc: plastic · installation: ceiling or wall · connection thread G ½ · connection dimension: DN15		Chrome	26723000	195.80
		Brushed Black Chrome	26723340	293.70
Water saving EcoSmart version:				
· Crometta S Overhead shower 240 1jet EcoSmart 9 l/ min		Chrome	26724000	197.90
Alternative products:				
· Crometta S Overhead shower 240 1jet LowPressure		Chrome	26725000	195.80
Optional parts:				
· Shower arm 38.9 cm		Chrome	27413000	80.50
	NEW	Brushed Bronze*	27413140	120.80
	NEW	Brushed Black Chrome*	27413340	120.80
	NEW	Matt Black*	27413670	112.70
	NEW	Matt White*	27413700	112.70
	NEW	Polished Gold Optic*	27413990	120.80
· Ceiling connector S 10 cm		Chrome	27393000	54.50
		Brushed Bronze	27393140	81.90
		Brushed Black Chrome	27393340	81.90
		Matt Black	27393670	76.80
		Matt White	27393700	76.80
		Polished Gold Optic	27393990	81.90

*** available from April 2020**

Crometta



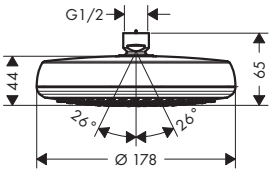

		finish	code no.	Euro
Crometta Overhead shower 160 1jet · shower head size: 180 mm · ball-joint: overhead shower angle adjustable · spray type: Rain · flow rate Rain spray (at 0.3 MPa): 20 l/ min · spray disc surface in two variants: chrome or white · material spray disc: plastic · installation: ceiling or wall · connection thread G ½ · connection dimension: DN15		Chrome	26577000	137.80
		White/Chrome	26577400	137.80
Water saving EcoSmart version:				
· Crometta Overhead shower 160 1jet EcoSmart 9 l/ min		Chrome	26578000	137.80
		White/Chrome	26578400	137.80
Alternative products:				
· Crometta Overhead shower 160 1jet LowPressure		White/Chrome	26576400	137.80
Optional parts:				
· Shower arm 23 cm		Chrome	27412000	57.00
· Ceiling connector 10 cm		Chrome	27479000	54.30

Measurements within scale drawings are in mm.

Technical specifications and units of measure are subject to change.

Crometta 85

		finish	code no.	Euro
	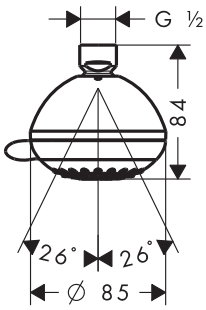	**Crometta 85 Overhead shower Multi** · shower head size: 85 mm · ball-joint: overhead shower angle adjustable · spray type: MonoRain, normal spray, Massage spray · flow rate Mono spray (at 0.3 MPa): 13 l/min · flow rate normal spray (at 0.3 MPa): 15 l/min · flow rate massage spray (at 0.3 MPa): 13 l/min · adjustment with shift on overhead shower · grey spray disc · material spray disc: plastic · installation: ceiling or wall · connection thread G ½ · connection dimension: DN15	Chrome	28425000	52.80 Quick Clean
		Optional parts: · Shower arm 12.8 cm	Chrome	27411000	20.80
	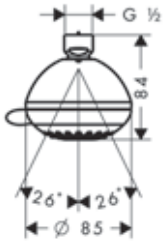	**Crometta 85 Overhead shower Vario** · shower head size: 85 mm · ball-joint: overhead shower angle adjustable · spray type: normal spray, Vario spray · flow rate normal spray (at 0.3 MPa): 18 l/min · flow rate Vario spray (at 0.3 MPa): 14 l/min · adjustment with shift on overhead shower · grey spray disc · material spray disc: plastic · installation: ceiling or wall · connection thread G ½ · connection dimension: DN15	Chrome	28424000	42.50 Quick Clean
		Optional parts: · Shower arm 12.8 cm	Chrome	27411000	20.80
	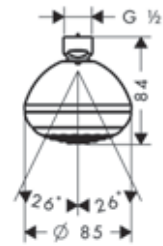	**Crometta 85 Overhead shower 1jet Green 6 l/min** · shower head size: 85 mm · ball-joint: overhead shower angle adjustable · spray type: normal spray · flow rate normal spray (at 0.3 MPa): 5.7 l/min · grey spray disc · material spray disc: plastic · installation: ceiling or wall · connection thread G ½ · connection dimension: DN15	Chrome	28423000 Eco Smart	42.00 Quick Clean
		Optional parts: · Shower arm 12.8 cm	Chrome	27411000	20.80

Measurements within scale drawings are in mm.

Technical specifications and units of measure are subject to change.

Clubmaster



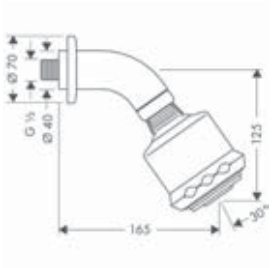

	finish	code no.	Euro
Clubmaster Overhead shower 3jet with shower arm · shower head size: 85 mm · shower arm length: 165 mm · ball-joint: overhead shower angle adjustable · spray type: Soft spray, normal spray, Massage spray · flow rate soft spray (at 0.3 MPa): 17 l/ min · flow rate normal spray (at 0.3 MPa): 19 l/ min · flow rate massage spray (at 0.3 MPa): 12 l/ min · grey spray disc · material spray disc: plastic · installation: wall · connection thread G ½ · connection dimension: DN15	Chrome	27475000	254.20
Consisting of: · Shower arm 10 cm (# 27438000) · Clubmaster Overhead shower 3jet (# 28496000)			
Water saving EcoSmart version: · Clubmaster Overhead shower 3jet EcoSmart 9 l/ min with shower arm	Chrome	26606000	254.20



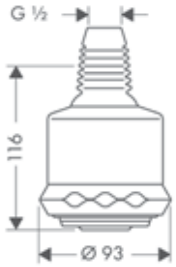

Clubmaster Overhead shower 3jet · shower head size: 85 mm · ball-joint: overhead shower angle adjustable · spray type: Soft spray, normal spray, Massage spray · flow rate soft spray (at 0.3 MPa): 17 l/ min · flow rate normal spray (at 0.3 MPa): 19 l/ min · flow rate massage spray (at 0.3 MPa): 12 l/ min · adjustment with shift on overhead shower · grey spray disc · material spray disc: plastic · installation: ceiling or wall · connection thread G ½ · connection dimension: DN15	Chrome	28496000	196.90
Optional parts:			
· Shower arm 10 cm	Chrome	27438000	69.40
· Shower arm 12.8 cm	Chrome	27411000	20.80

Shower arms for overhead showers

NEW



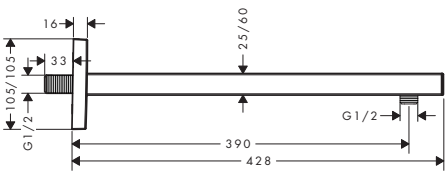

Shower arm square 38.9 cm · wall-mounted · connection thread G ½ · connection dimension DN15	Chrome	27694000	180.00
	Brushed Bronze*	27694140	270.00
	Brushed Black Chrome*	27694340	270.00
	Matt Black*	27694670	252.00
	Matt White	27694700	252.00
	Polished Gold Optic*	27694990	270.00

***available from April 2020**

Measurements within scale drawings are in mm.

Technical specifications and units of measure are subject to change.

Overhead showers

	finish	code no.	Euro
Shower arm 10 cm · wall-mounted · installation type: exposed installation · connection thread G ½	Chrome	27438000	69.40
Optional parts: · Clubmaster Overhead shower 3jet	Chrome	28496000	196.90



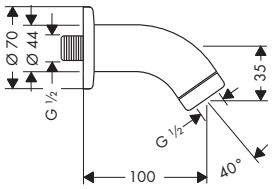

Shower arm 12.8 cm · wall-mounted · installation type: exposed installation · connection thread G ½	Chrome	27411000	20.80



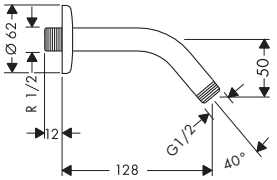

Shower arm 23 cm · wall-mounted · installation type: exposed installation · connection thread G ½	Chrome	27412000	57.00



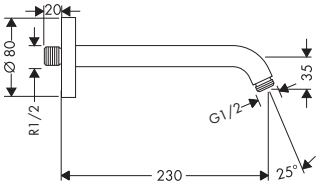

Shower arm 24.1 cm · wall-mounted · version: 90° angle · connection thread G ½	Chrome	27409000	57.00



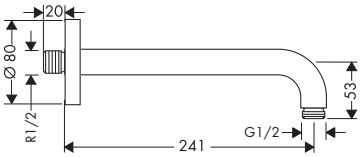

Shower arm 38.9 cm · wall-mounted · version: 90° angle · connection thread G ½		Chrome	27413000	80.50
	NEW	Brushed Bronze*	27413140	120.80
	NEW	Brushed Black Chrome*	27413340	120.80
	NEW	Matt Black*	27413670	112.70
	NEW	Matt White*	27413700	112.70
	NEW	Polished Gold Optic*	27413990	120.80

***available from April 2020**



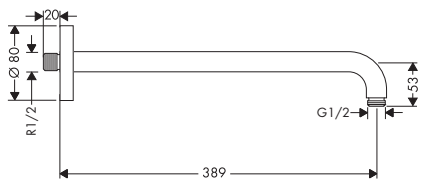

Shower arm E 38.9 cm · wall-mounted · version: 90° angle · connection thread G ½ · connection dimension DN15	Chrome	27446000	80.50



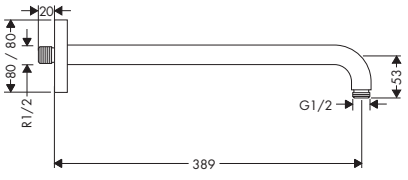

Measurements within scale drawings are in mm.

Technical specifications and units of measure are subject to change.

Ceiling connectors for overhead showers

	finish	code no.	Euro
 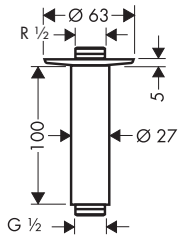 **Ceiling connector 10 cm** · length 100 mm · purpose of use: also usable as an extension · installation type: exposed installation · material: brass · shaft Ø 27 mm · connection thread G ½	Chrome	27479000	54.30
 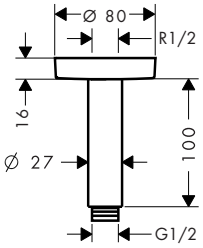 **Ceiling connector S 10 cm** · length 100 mm · purpose of use: also usable as an extension · material: brass · connection thread G ½ · connection dimension DN15	Chrome **NEW** Brushed Bronze **NEW** Brushed Black Chrome **NEW** Matt Black **NEW** Matt White **NEW** Polished Gold Optic	27393000 27393140 27393340 27393670 27393700 27393990	54.50 81.90 81.90 76.80 76.80 81.90
 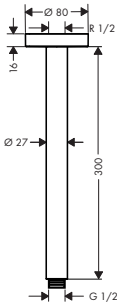 **Ceiling connector S 30 cm** · length 300 mm · material: brass · connection thread G ½ · connection dimension DN15	Chrome **NEW** Brushed Bronze **NEW** Brushed Black Chrome **NEW** Matt Black **NEW** Matt White **NEW** Polished Gold Optic	27389000 27389140 27389340 27389670 27389700 27389990	73.50 110.60 110.60 103.40 103.40 110.60
 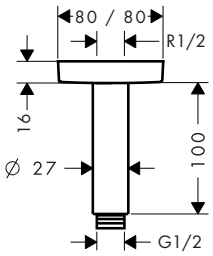 **Ceiling connector E 10 cm** · length 100 mm · purpose of use: also usable as an extension · material: brass · shaft Ø 27 mm · connection thread G ½ · connection dimension DN15	Chrome	27467000	54.30
 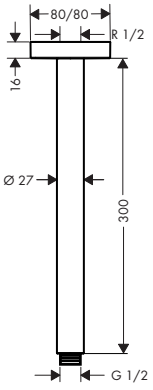 **Ceiling connector E 30 cm** · length 300 mm · material: brass · connection thread G ½ · connection dimension DN15	Chrome	27388000	73.50

Measurements within scale drawings are in mm.

Body showers

	finish	code no.	Euro
Rainfinity Shoulder shower 500 1jet with shower shelf · spray area: 309 x 28 mm · shower head size: 502 x 81 mm · field of application: functions as overhead, shoulder or side shower · spray type: PowderRain · maximum flow rate at 0.3 MPa: 13 l/min · connection thread: G ½ · connection dimension: DN15 · material: metal · shelf made of safety glass · surface of the shelf at color variant -000 = mirror glass, at color variant -700 = graphite color, satined	Chrome Matt White	26243000 26243700	450.00 585.00





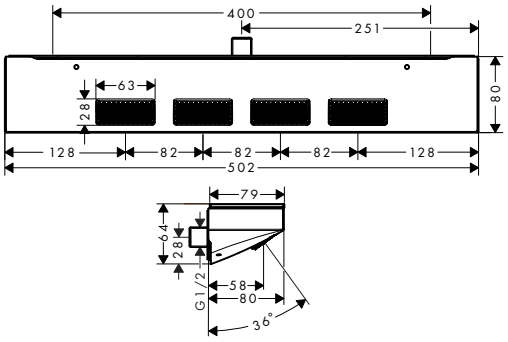

PuraVida Body shower 100 1jet · shower head size: 100 mm · 360° range of rotation · spray type: RainAir · flow rate RainAir spray (at 0.3 MPa): 4.5 l/min · connection thread: G ½ · connection dimension: DN15	Chrome White/Chrome	28430000 28430400	138.60 138.60



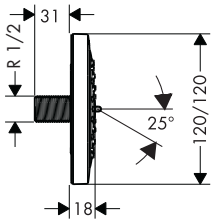

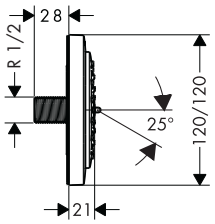

Bodyvette Body shower 1jet · ball-joint: side shower angle adjustable · spray type: normal spray · flow rate normal spray (at 0.3 MPa): 6 l/min · grey spray disc · connection thread: G ½ · connection dimension: DN15	Chrome	28466000	97.80
Alternative products: · Bodyvette Body shower 1jet stop	Chrome	28467000	113.30



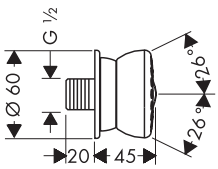

Measurements within scale drawings are in mm.

Technical specifications and units of measure are subject to change.

Showerpipes and shower panels



Rainfinity Showerpipes	page 164		Rainmaker Select Showerpipes	page 165	
Raindance Select E Showerpipes	page 167		Raindance Select S Showerpipes	page 169	
Croma Select E Showerpipes	page 179		Croma Select S Showerpipes	page 182	
Croma E	page 189		Croma Showerpipes	page 190	
Crometta Showerpipes	page 199		Raindance shower panel	page 200	

Selected showerpipes at a glance

		Crometta®		Croma®		
						
		Crometta® Showerpipe 160 1jet	**Crometta® E** Showerpipe 240 1jet	**Croma®** Showerpipe 220 1jet	**Croma® E** Showerpipe 280 1jet	**Croma® Select E** Showerpipe 180 2jet
Versions	Shower with thermostat	27264, -400	27271, -000	27185, -000	27630, -000	27256, -400
	EcoSmart 9 l/min shower with thermostatic mixer	27265, -400	27281, -000	27188, -000	27660, -000	27257, -400
	Shower with single lever mixer	27266, -400	27284, -000	27222, -000		27258, -400
	Bath with thermostat		27298, -000	27223, -000	27687, -000	27352, -400
	Reno bath/shower		27289, -000	27224, -000		
Overhead shower	Overhead shower	Crometta Overhead shower 160 1jet	Crometta E Overhead shower 240 1jet	Croma Overhead shower 220 1jet	Croma E Overhead shower 280 1jet	Croma Select E Overhead shower 180 2jet
	Size of shower head	160 mm	240 x 240 mm	220 mm	280 mm	180 x 180 mm
	Spray modes (l/min in the standard version)	Rain 17 l/min	Rain 15 l/min	RainAir 15 l/min	RainAir 15 l/min	Rain 16 l/min IntenseRain 16 l/min
Hand shower	Hand shower	Crometta 100 Hand shower Vario	Crometta Hand shower Vario	Croma 100 Hand shower Vario	Croma Select E Hand shower Multi	Croma Select E Hand shower Multi
	Spray modes (l/min in the standard version)	Rain 18 l/min Massage 18 l/min	Rain 14 l/min IntenseRain 14 l/min	Rain 18 l/min Massage 18 l/min	Massage 16 l/min IntenseRain 16 l/min SoftRain 16 l/min	Massage 16 l/min IntenseRain 16 l/min SoftRain 16 l/min
Features	Thermostat	Ecostat Universal	Ecostat 1001 CL	Ecostat Comfort	Ecostat E	Ecostat Comfort
	Shower hose	■		■	■	■
	Swivel shower arm	■		■	■	■
	Length of shower arm	350 mm	350 mm	400 mm		400 mm
	Height of the Showerpipe can be reduced	■	■	■		
Uniques	Select					■
	AirPower			■	■	
	QuickClean	■	■	■	■	■

■ Available

	Raindance®				Rainfinity®	Rainmaker® Select
						
Croma® Select S Showerpipe 280 1jet	**Raindance® Select S** Showerpipe 240 1jet P	**Raindance® Select S** Showerpipe 300 2jet	**Raindance® E** Showerpipe 300 1jet	**Raindance® Select E** Showerpipe 300 3jet	**Rainfinity®** Showerpipe 360 1jet	**Rainmaker® Select** Showerpipe 460 3jet
26790, -000	27633, -XXX	27133, -000, -400	27363, -000, -400	27127, -000, -400	26842, -000, -700	27106, -400
26794, -000			27364, -000, -400			27029, -400
26791, -000						
26792, -000						
26793, -000						
Croma Overhead shower 280 1jet	Raindance S Overhead shower 240 1jet P	Raindance Select S Overhead shower 300 2jet	Raindance E 300 Overhead shower 1jet	Raindance Select E Overhead shower 300 3jet	Rainfinity Overhead shower 360 1jet	Rainmaker Select Overhead shower 460 3jet
280 mm	240 mm	300 mm	300 x 300 mm	300 x 190 mm	360 mm	460 x 300 mm
RainAir 16 l/min	PowderRain 16 l/min	Rain 15 l/min RainAir 15 l/min	RainAir 13 l/min	Rain 16 l/min RainAir 16 l/min RainStream 19 l/min	PowderRain 19.6 l/min	Rain 27 l/min RainStream 27 l/min Mono 27 l/min
Croma Select S Hand shower Multi	Raindance Select S Hand shower 120 3jet P	Raindance Select S Hand shower 120 3jet	Raindance Select S Hand shower 120 3jet	Raindance Select E Hand shower 120 3jet	Rainfinity Hand shower 130 3jet	Raindance Select S Hand shower 120 3jet
Massage 16 l/min IntenseRain 16 l/min SoftRain 16 l/min	Rain 12 l/min Whirl 12 l/min PowderRain 12 l/min	RainAir 15 l/min Rain 15 l/min Whirl 15 l/min	RainAir 15 l/min Rain 15 l/min Whirl 15 l/min	RainAir 15 l/min Rain 15 l/min Whirl 15 l/min	PowderRain 10,6 l/min Intense PowderRain 10,6 l/min MonoRain 10,6 l/min	RainAir 15 l/min Rain 15 l/min Whirl 15 l/min
Ecostat Comfort	Ecostat Comfort	Ecostat Comfort	ShowerTablet 600	ShowerTablet Select 300		ShowerTablet Select 700
■	■	■	■	■	■	■
■	■	■	90°		10–30°	
400 mm	460 mm	460 mm	405 mm			450 mm
■		■				
	■	■	■	■	■	■
■		■	■	■		
■	■	■	■	■	■	■

Price

All specified flow rates are based on an operating pressure of **0.3** MPa (3 bar).

Rainfinity Showerpipe

		finish	code no.	Euro
NEW	**Rainfinity Showerpipe 360 1jet for concealed installation** · requires a thermostat for 2 functions · consists of: overhead shower, hand shower, shower hose, shower holder, shelves, wall outlet · shower holder inclination angle can be adjusted continously · overhead shower inclinable by 10-30° · overhead shower Rainfinity 360 1jet · shower head size: 360 mm · spray type: PowderRain · maximum flow rate at 0.3 MPa: 19.6 l/min · spray disc surface: graphite · outlet: overhead shower, hand shower · isolated water conduction · water connection: shelf with integrated connection · installation type: concealed · connection thread G ½ · connection dimension: DN15 · scope of supply: Showerpipe for concealed installation, mounting material, assembly instruction · not included: basic set	Chrome Matt White	26842000 26842700	1,250.00 1,625.00



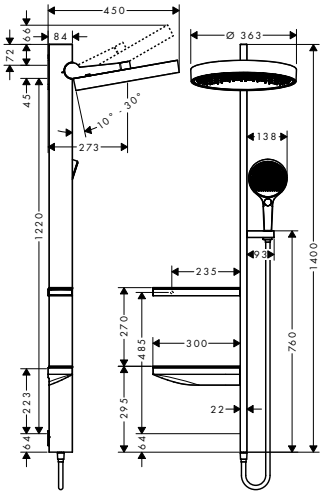

Select · Quick Clean · XXL Performance

Consisting of:
· Rainfinity Hand shower 130 3jet (# 26864XXX)
· Isiflex Shower hose 160 cm (# 28276XXX)

Required parts:

		finish	code no.	Euro
NEW	· Rainfinity Basic set for Showerpipe 360 1jet for concealed installation		26840180	110.00
NEW	· RainSelect Thermostat for concealed installation for 2 functions	Chrome	15380000	1,065.00
		NEW Brushed Bronze*	15380140	1,598.00
		NEW Brushed Black Chrome*	15380340	1,598.00
		NEW Matt Black*	15380670	1,384.50
		NEW Matt White	15380700	1,384.50
		NEW Polished Gold Optic*	15380990	1,598.00

***available from April 2020**

NEW	**Rainfinity Basic set for Showerpipe 360 1jet for concealed installation** · suitable for Showerpipe 360 1jet for concealed installation · sound-decoupled installation · The position of the connections is given, thus easy installation · easy mounting · connection dimension: G ½		26840180	110.00



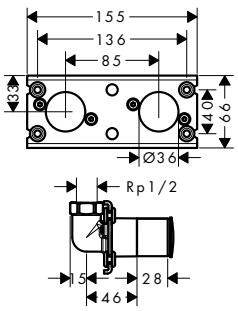

Measurements within scale drawings are in mm.

Technical specifications and units of measure are subject to change.

Rainmaker Select Showerpipes



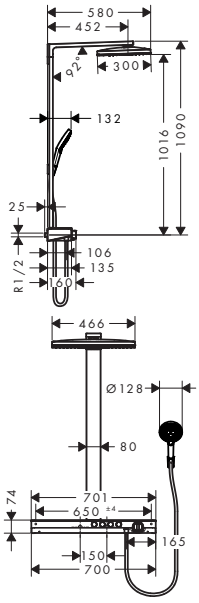

	finish	code no.	Euro
Rainmaker Select Showerpipe 460 3jet with thermostat · consists of: overhead shower, hand shower, shower thermostat, shower hose, shower holder · maximum flow rate at 0.3 MPa: 27 l/ min · simultaneous utilization by 4 outlets · overhead shower Rainmaker Select 460 3jet · shower head size: 460 x 300 mm · shelf made of safety glass · shelf finish: white · spray type: Rain, MonoRain, RainStream · convenient diversion via Select button · operating pressure: min. 0.15 MPa/ max. 1.0 MPa · easy cleanable glass spray disc · shower arm length: 450 mm · CoolContact thermostat: Prevents the housing from heating up, making showering even safer · thermostat ShowerTablet Select 700 · isolated water conduction · safety lock at 40° C · adjustable hot water limitation · convenient diversion via Select button · installation type: exposed installation · connection dimension DN15 · connection thread G ½ · centre distance 150 ± 18 mm Cool Contact · Select · Quick Clean · XXL Performance	White/Chrome	27106400	3,618.90
Consisting of: · Shower holder Porter S (# 28331XXX) · Isiflex Shower hose 160 cm (# 28276XXX) · Raindance Select S Hand shower 120 3jet (# 26530XXX)			
Water saving EcoSmart version: · Rainmaker Select Showerpipe 460 3jet EcoSmart 9 l/ min with thermostat	White/Chrome	27029400	3,618.90

Measurements within scale drawings are in mm.

Technical specifications and units of measure are subject to change.

	finish	code no.	Euro



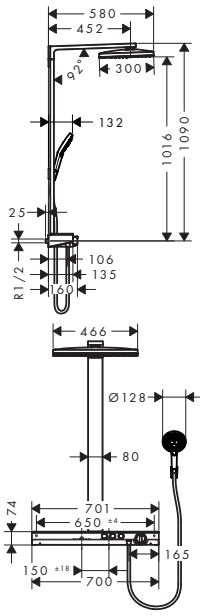

Rainmaker Select Showerpipe 460 2jet with thermostat — White/Chrome — 27109400 — 3,166.60

Cool Contact · Select · Quick Clean · XXL Performance

- consists of: overhead shower, hand shower, shower thermostat, shower hose, shower holder
- maximum flow rate at 0.3 MPa: 19 l/ min
- simultaneous utilization by 3 outlets
- overhead shower Rainmaker Select 460 2jet
- shower head size: 460 x 300 mm
- shelf made of safety glass
- shelf finish: white
- spray type: Rain, RainStream
- operating pressure: min. 0.15 MPa/ max. 1.0 MPa
- easy cleanable glass spray disc
- shower arm length: 450 mm
- CoolContact thermostat: Prevents the housing from heating up, making showering even safer
- thermostat ShowerTablet Select 700
- isolated water conduction
- safety lock at 40° C
- adjustable hot water limitation
- convenient diversion via Select button
- installation type: exposed installation
- connection dimension DN15
- connection thread G ½
- centre distance 150 ± 18 mm

Consisting of:

- Raindance Select S Hand shower 120 3jet (# 26530XXX)
- Isiflex Shower hose 160 cm (# 28276XXX)
- Shower holder Porter S (# 28331XXX)

Water saving EcoSmart version:

- Rainmaker Select Showerpipe 460 2jet EcoSmart 9 l/ min with thermostat — White/Chrome — 27028400 — 3,166.60

Measurements within scale drawings are in mm.

Technical specifications and units of measure are subject to change.

Raindance Select E Showerpipes

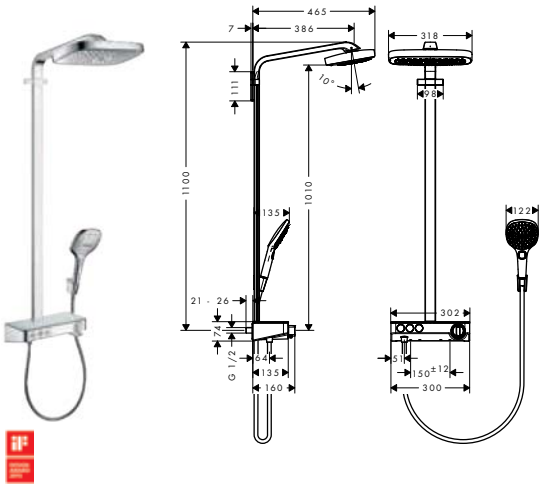

	finish	code no.	Euro
Raindance Select E Showerpipe 300 3jet with ShowerTablet Select 300	Chrome	27127000	1,895.40
	White/Chrome	27127400	1,895.40

Cool Contact · Select · Air Power · Quick Clean · XXL Performance

- consists of: overhead shower, hand shower, shower thermostat, shower hose, shower holder
- maximum flow rate at 0.3 MPa: 19 l/ min
- overhead shower Raindance Select E 300 3jet
- shower head size: 300 x 190 mm
- shelf made of safety glass
- shelf finish: chrome or white
- spray type: RainAir, Rain, RainStream
- convenient diversion via Select button
- flow rate RainAir spray (at 0.3 MPa): 16 l/ min
- flow rate Rain spray (at 0.3 MPa): 16 l/ min
- flow rate RainStream spray (at 0.3 MPa): 19 l/ min
- operating pressure: min. 0.2 MPa/ max. 1.0 MPa
- spray disc surface in two variants: chrome or white
- shower arm length: 380 mm
- CoolContact thermostat: Prevents the housing from heating up, making showering even safer
- thermostat ShowerTablet Select 300
- isolated water conduction
- safety lock at 40° C
- adjustable hot water limitation
- convenient diversion via Select button
- installation type: exposed installation
- connection dimension DN15
- connection thread G ½
- centre distance 150 ± 12 mm
- in case of installation on existing G ¾ connections, adaptor # 02026000 must be used

Consisting of:

- Shower holder Porter S (# 28331XXX)
- Isiflex Shower hose 160 cm (# 28276XXX)
- Raindance Select E Hand shower 120 3jet (# 26520XXX)

Optional parts:

· S-connections adapter G ¾ for renovation	Chrome	02026000	29.70

Measurements within scale drawings are in mm.

Technical specifications and units of measure are subject to change.

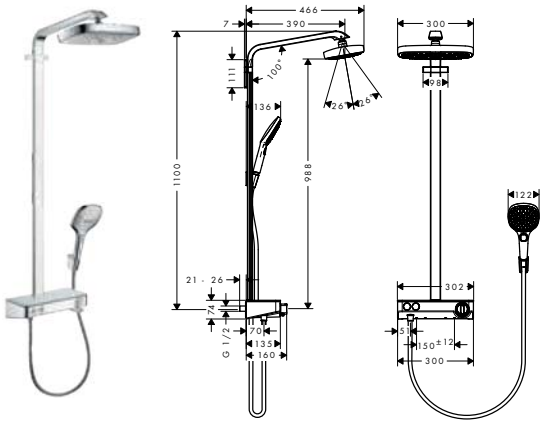

	finish	code no.	Euro
Raindance Select E Showerpipe 300 2jet with ShowerTablet Select 300 · consists of: overhead shower, hand shower, shower thermostat, shower hose, shower holder · maximum flow rate at 0.3 MPa: 16 l/ min · overhead shower Raindance Select E 300 2jet · shower head size: 300 x 160 mm · ball-joint: overhead shower angle adjustable · shelf made of safety glass · shelf finish: chrome or white · spray type: RainAir, Rain · convenient diversion via Select button · flow rate RainAir spray (at 0.3 MPa): 16 l/ min · flow rate Rain spray (at 0.3 MPa): 16 l/ min · operating pressure: min. 0.15 MPa/ max. 1.0 MPa · spray disc surface in two variants: chrome or white · shower arm length: 380 mm · CoolContact thermostat: Prevents the housing from heating up, making showering even safer · thermostat ShowerTablet Select 300 · isolated water conduction · safety lock at 40° C · adjustable hot water limitation · convenient diversion via Select button · installation type: exposed installation · connection dimension DN15 · connection thread G ½ · centre distance 150 ± 12 mm · in case of installation on existing G ¾ connections, adaptor # 02026000 must be used	Chrome White/Chrome	27126000 27126400	1,599.40 1,599.40
Consisting of: · Shower holder Porter S (# 28331XXX) · Isiflex Shower hose 160 cm (# 28276XXX) · Raindance Select E Hand shower 120 3jet (# 26520XXX)			
Water saving EcoSmart version: · Raindance Select E Showerpipe 300 2jet EcoSmart 9 l/ min with ShowerTablet Select 300	Chrome White/Chrome	27283000 27283400	1,599.40 1,599.40
Optional parts: · S-connections adapter G ¾ for renovation	Chrome	02026000	29.70

Measurements within scale drawings are in mm.

Technical specifications and units of measure are subject to change.

Raindance Select S Showerpipes

	finish	code no.	Euro



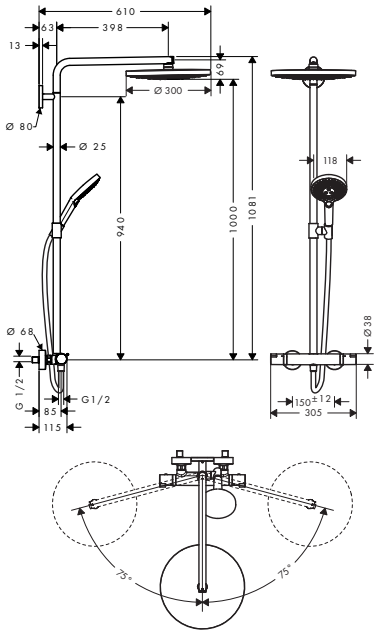

Raindance Select S Showerpipe 300 2jet with thermostat

Chrome	27133000	1,180.80
White/Chrome	27133400	1,180.80

Select · Air Power · Quick Clean · XXL Performance

- consists of: overhead shower, hand shower, shower thermostat, shower hose, slider
- maximum flow rate at 0.3 MPa: 15 l/min
- overhead shower Raindance Select S 300 2jet
- shower head size: 300 mm
- spray type: RainAir, Rain
- convenient diversion via Select button
- operating pressure: min. 0.15 MPa/max. 1.0 MPa
- spray disc surface in two variants: chrome or white
- shower arm length: 460 mm
- swivel shower arm
- thermostat Ecostat Comfort
- safety lock at 40° C
- adjustable hot water limitation
- outlets controlled via turning handle
- installation type: exposed installation
- connection dimension DN15
- connection thread G ½
- centre distance 150 ± 12 mm
- height-adjustable hand shower holder
- suitable for continuous flow water heaters with an output of 18 kW
- rising pipe can be shortened in height

Consisting of:
- Isiflex Shower hose 160 cm (# 28276XXX)
- Raindance Select S Hand shower 120 3jet (# 26530XXX)

Optional parts:

· Wall bar spacer	Chrome	98681000	13.20



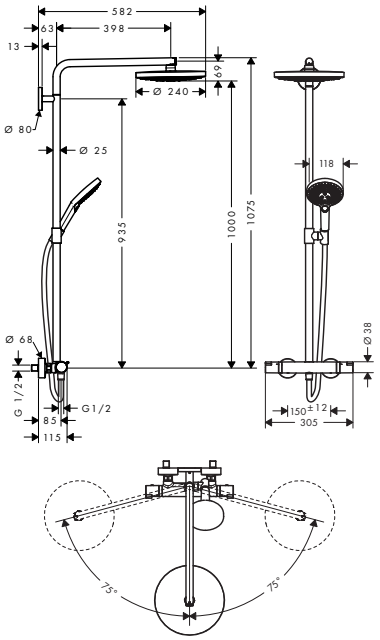

Raindance Select S Showerpipe 240 2jet with thermostat

Chrome	27129000	994.40
White/Chrome	27129400	994.40

Select · Air Power · Quick Clean · XXL Performance

- consists of: overhead shower, hand shower, shower thermostat, shower hose, slider
- maximum flow rate at 0.3 MPa: 15 l/min
- overhead shower Raindance Select S 240 2jet
- shower head size: 240 mm
- spray type: RainAir, Rain
- convenient diversion via Select button
- operating pressure: min. 0.15 MPa/max. 1.0 MPa
- spray disc surface in two variants: chrome or white
- shower arm length: 398 mm
- swivel shower arm
- thermostat Ecostat Comfort
- safety lock at 40° C
- adjustable hot water limitation
- outlets controlled via turning handle
- installation type: exposed installation
- connection dimension DN15
- connection thread G ½
- centre distance 150 ± 12 mm
- height-adjustable hand shower holder
- suitable for continuous flow water heaters with an output of 18 kW
- rising pipe can be shortened in height

Consisting of:
- Isiflex Shower hose 160 cm (# 28276XXX)
- Raindance Select S Hand shower 120 3jet (# 26530XXX)

Optional parts:

· Wall bar spacer	Chrome	98681000	13.20

Measurements within scale drawings are in mm.

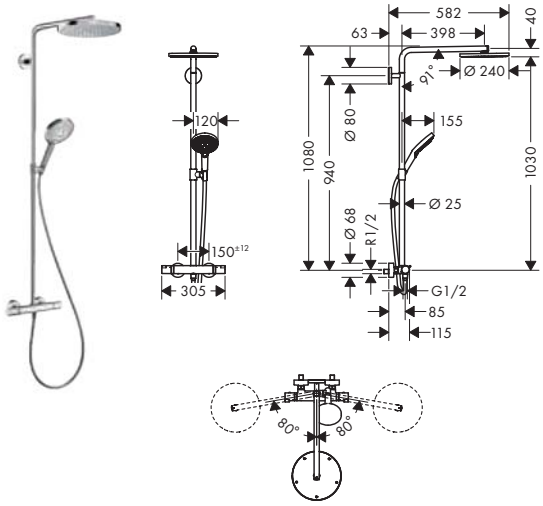

		finish	code no.	Euro
Raindance Select S Showerpipe 240 1jet PowderRain with thermostat		Chrome	27633000	911.40
	NEW	Brushed Bronze	27633140	1,367.00
	NEW	Brushed Black Chrome	27633340	1,367.00
	NEW	Matt Black	27633670	1,275.90
	NEW	Matt White	27633700	1,275.90
	NEW	Polished Gold Optic	27633990	1,367.00

Select · Quick Clean · XXL Performance

- consists of: overhead shower, hand shower, shower thermostat, shower hose, slider
- maximum flow rate at 0.3 MPa: 16 l/ min
- overhead shower Raindance S240 P
- shower head size: 240 mm
- spray type: PowderRain
- flow rate PowderRain spray (at 0.3 MPa): 16 l/ min
- operating pressure: min. 0.15 MPa/ max. 1.0 MPa
- fully chrome-plated spray disc
- shower arm length: 460 mm
- swivel shower arm
- thermostat Ecostat Comfort
- safety lock at 40° C
- adjustable hot water limitation
- outlets controlled via turning handle
- installation type: exposed installation
- connection dimension DN15
- connection thread G ½
- centre distance 150 ± 12 mm
- height-adjustable hand shower holder
- rising pipe can be shortened in height

Consisting of:

- Raindance S Overhead shower 240 1jet PowderRain (# 27623000)
- Raindance Select S Hand shower 120 3jet PowderRain (# 26014000)
- Isiflex Shower hose 160 cm (# 28276XXX)

Optional parts:

· Wall bar spacer	Chrome	98681000	13.20

Measurements within scale drawings are in mm.

Technical specifications and units of measure are subject to change.

Raindance E Showerpipes



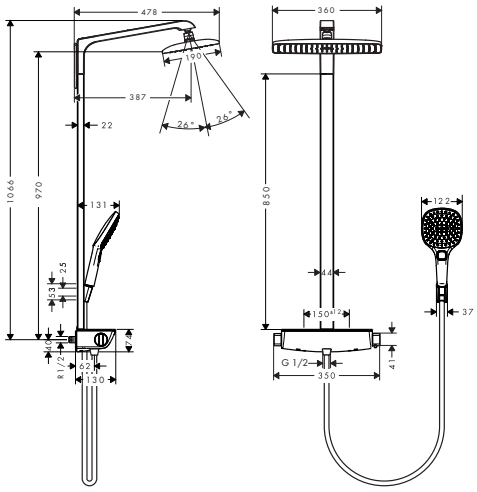

	finish	code no.	Euro
Raindance E Showerpipe 360 1jet with thermostat	Chrome	27112000	1,346.90
	White/Chrome	27112400	1,346.90

Cool Contact · Select · Air Power · Quick Clean · XXL Performance

- consists of: overhead shower, hand shower, shower thermostat, shower hose, shower holder
- maximum flow rate at 0.3 MPa: 15 l/ min
- overhead shower Raindance E 360 Air
- shower head size: 360 x 190 mm
- ball-joint: overhead shower angle adjustable
- shelf made of safety glass
- shelf finish: chrome or white
- spray type: RainAir
- operating pressure: min. 0.15 MPa/ max. 1.0 MPa
- fully chrome-plated spray disc
- shower arm length: 380 mm
- CoolContact thermostat: Prevents the housing from heating up, making showering even safer
- thermostat Ecostat Select
- isolated water conduction
- safety lock at 40° C
- adjustable hot water limitation
- outlets controlled via turning handle
- installation type: exposed installation
- connection dimension DN15
- connection thread G ½
- centre distance 150 ± 12 mm
- in case of installation on existing G ¾ connections, adaptor # 02026000 must be used

Consisting of:

- Shower holder Porter S (# 28331XXX)
- Isiflex Shower hose 160 cm (# 28276XXX)
- Raindance Select E Hand shower 120 3jet (# 26520XXX)

Water saving EcoSmart version:			
· Raindance E Showerpipe 360 1jet EcoSmart 9 l/ min with thermostat	Chrome	27286000	1,346.90
	White/Chrome	27286400	1,346.90
Optional parts:			
· S-connections adapter G ¾ for renovation	Chrome	02026000	29.70
· Wall bar spacer for Raindance Select	Chrome	95960000	26.10

Measurements within scale drawings are in mm.

Technical specifications and units of measure are subject to change.



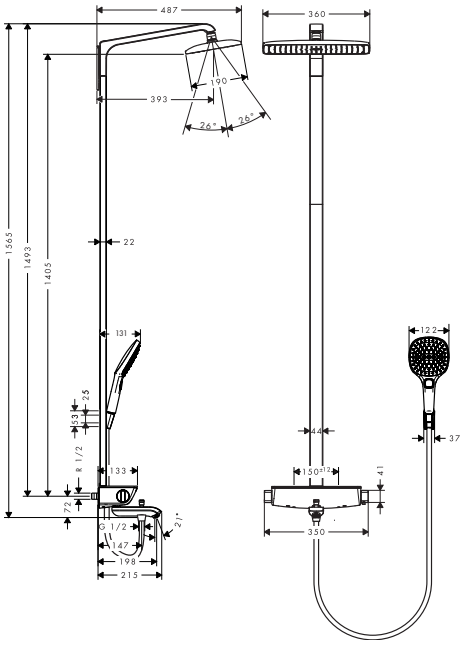

	finish	code no.	Euro
Raindance E Showerpipe 360 1jet with bath thermostat	Chrome	27113000	1,467.70
	White/Chrome	27113400	1,467.70

Cool Contact · Select · Air Power · Quick Clean · XXL Performance

- consists of: overhead shower, hand shower, bath thermostat, shower hose, shower holder
- maximum flow rate at 0.3 MPa: 20 l/ min
- overhead shower Raindance E 360 Air
- shower head size: 360 x 190 mm
- ball-joint: overhead shower angle adjustable
- shelf made of safety glass
- shelf finish: chrome or white
- spray type: RainAir
- flow rate RainAir spray (at 0.3 MPa): 17 l/ min
- operating pressure: min. 0.13 MPa/ max. 1.0 MPa
- fully chrome-plated spray disc
- shower arm length: 380 mm
- CoolContact thermostat: Prevents the housing from heating up, making showering even safer
- thermostat Ecostat Select
- flow rate bath filler: 20 l/ min
- isolated water conduction
- safety lock at 40° C
- adjustable hot water limitation
- outlets controlled via turning handle
- installation type: exposed installation
- connection dimension DN15
- connection thread G ½
- centre distance 150 ± 12 mm
- intrinsically safe against backflow
- rising pipe can be shortened in height
- in case of installation on existing G ¾ connections, adaptor # 02026000 must be used

Consisting of:

- Raindance Select E Hand shower 120 3jet (# 26520XXX)
- Isiflex Shower hose 160 cm (# 28276XXX)
- Shower holder Porter S (# 28331XXX)

Optional parts:

· S-connections adapter G ¾ for renovation	Chrome	02026000	29.70
· Wall bar spacer for Raindance Select	Chrome	95960000	26.10

Measurements within scale drawings are in mm.

Technical specifications and units of measure are subject to change.

	finish	code no.	Euro
Raindance E Showerpipe 360 1jet with ShowerTablet Select 300	Chrome	27288000	1,599.40
	White/Chrome	27288400	1,599.40



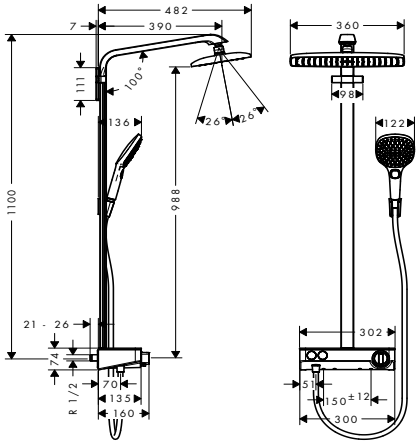

- consists of: overhead shower, hand shower, shower thermostat, shower hose, shower holder
- maximum flow rate at 0.3 MPa: 11 l/min
- overhead shower Raindance E 360 Air
- shower head size: 360 x 190 mm
- ball-joint: overhead shower angle adjustable
- shelf made of safety glass
- shelf finish: chrome or white
- spray type: RainAir
- operating pressure: min. 0.2 MPa/max. 1.0 MPa
- fully chrome-plated spray disc
- shower arm length: 380 mm
- CoolContact thermostat: Prevents the housing from heating up, making showering even safer
- thermostat ShowerTablet Select 300
- isolated water conduction
- safety lock at 40° C
- adjustable hot water limitation
- convenient diversion via Select button
- installation type: exposed installation
- connection dimension DN15
- connection thread G ½
- centre distance 150 ± 12 mm
- in case of installation on existing G ¾ connections, adaptor # 02026000 must be used

Cool Contact · Select · Air Power · Quick Clean · XXL Performance

Consisting of:
- Shower holder Porter S (# 28331XXX)
- Isiflex Shower hose 160 cm (# 28276XXX)
- Raindance Select E Hand shower 120 3jet (# 26520XXX)

Optional parts:

· S-connections adapter G ¾ for renovation	Chrome	02026000	29.70



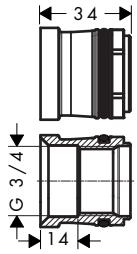

S-connections adapter G ¾ for renovation

	Chrome	02026000	29.70

- adapter for installation on existing s-unions G ½ x G ¾
- installation type: exposed installation
- connection dimension G ¾

Measurements within scale drawings are in mm.

	finish	code no.	Euro
Raindance E Showerpipe 300 1jet with ShowerTablet 600 · consists of: overhead shower, hand shower, shower thermostat, shower hose, slider · maximum flow rate at 0.3 MPa: 16 l/ min · 90° position adjustable slider, pivots left and right, up and down · will not run two outlets at same time · overhead shower Raindance E 300 Air 1jet · shower head size: 300 x 300 mm · ball-joint: overhead shower angle adjustable · shelf finish: aluminium anodized · spray type: RainAir · fully chrome-plated spray disc · shower arm length: 405 mm · CoolContact thermostat: Prevents the housing from heating up, making showering even safer · thermostat ShowerTablet 600 · isolated water conduction · safety lock at 40° C · outlets controlled via turning handle · installation type: exposed installation · connection dimension DN15 · connection thread G ½ · centre distance 150 ± 12 mm	Chrome	27363000	1,538.40
Consisting of: · Isiflex Shower hose 160 cm (# 28276XXX) · Raindance Select S Hand shower 120 3jet (# 26530XXX)			
Water saving EcoSmart version: · Raindance E Showerpipe 300 1jet EcoSmart 9 l/ min with ShowerTablet 600	Chrome	27364000	1,538.40
Optional parts:			
· Wall bar spacer	Chrome	93146000	90.50
· Casetta Soap dish E	Chrome	26511000	63.20
	White/Chrome	26511400	63.20
	Black/Chrome	26511600	63.20



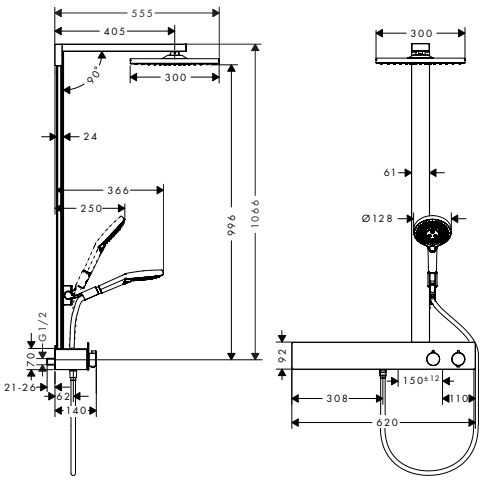

Measurements within scale drawings are in mm.

Technical specifications and units of measure are subject to change.

	finish	code no.	Euro



Raindance E Showerpipe 300 1jet with ShowerTablet 350 — Chrome — 27361000 — 1,317.20

Cool Contact · Select · Air Power · Quick Clean · XXL Performance

- consists of: overhead shower, hand shower, shower thermostat, shower hose, slider
- maximum flow rate at 0.3 MPa: 16 l/ min
- 90° position adjustable slider, pivots left and right, up and down
- will not run two outlets at same time
- overhead shower Raindance E 300 Air 1jet
- shower head size: 300 x 300 mm
- ball-joint: overhead shower angle adjustable
- shelf finish: aluminium anodized
- spray type: RainAir
- operating pressure: min. 0.1 MPa/ max. 1.0 MPa
- fully chrome-plated spray disc
- shower arm length: 405 mm
- CoolContact thermostat: Prevents the housing from heating up, making showering even safer
- thermostat ShowerTablet 350
- isolated water conduction
- safety lock at 40° C
- outlets controlled via turning handle
- installation type: exposed installation
- connection dimension DN15
- connection thread G ½
- centre distance 150 ± 12 mm

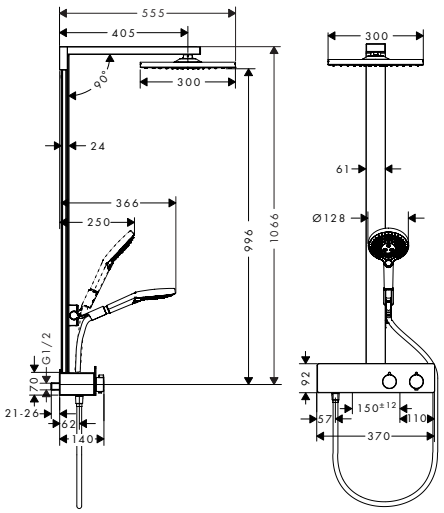

Consisting of:
- Isiflex Shower hose 160 cm (# 28276XXX)
- Raindance Select S Hand shower 120 3jet (# 26530XXX)

Water saving EcoSmart version:
- Raindance E Showerpipe 300 1jet EcoSmart 9 l/ min with ShowerTablet 350 — Chrome — 27362000 — 1,317.20

Optional parts:
- Wall bar spacer — Chrome — 93146000 — 90.50
- Casetta Soap dish E — Chrome — 26511000 — 63.20
  White/Chrome — 26511400 — 63.20
  Black/Chrome — 26511600 — 63.20

Measurements within scale drawings are in mm.

Technical specifications and units of measure are subject to change.

Raindance S Showerpipes



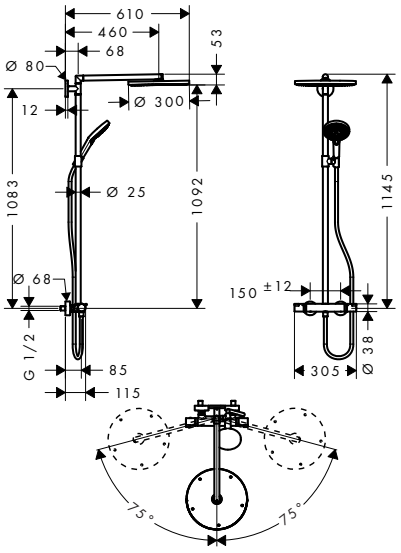

	finish	code no.	Euro
Raindance S Showerpipe 300 1jet with thermostat	Chrome	27114000	1,029.80

Select · Air Power · Quick Clean · XXL Performance

- consists of: overhead shower, hand shower, shower thermostat, shower hose, slider
- maximum flow rate at 0.3 MPa: 16 l/min
- overhead shower Raindance S 300 Air
- shower head size: 300 mm
- spray type: RainAir
- operating pressure: min. 0.2 MPa/ max. 1.0 MPa
- fully chrome-plated spray disc
- shower arm length: 460 mm
- swivel shower arm
- thermostat Ecostat Comfort
- safety lock at 40° C
- adjustable hot water limitation
- outlets controlled via turning handle
- installation type: exposed installation
- connection dimension DN15
- connection thread G ½
- centre distance 150 ± 12 mm
- height-adjustable hand shower holder
- suitable for continuous flow water heaters with an output of 18 kW
- rising pipe can be shortened in height

Consisting of:

- Isiflex Shower hose 160 cm (# 28276XXX)
- Raindance Select S Hand shower 120 3jet (# 26530XXX)

Optional parts:

· Wall bar spacer	Chrome	98681000	13.20

Measurements within scale drawings are in mm.

Technical specifications and units of measure are subject to change.



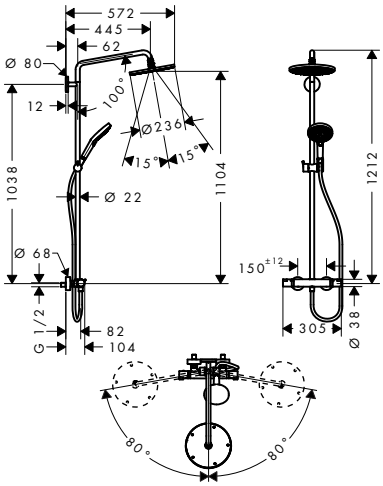

	finish	code no.	Euro
Raindance S Showerpipe 240 1jet with thermostat · consists of: overhead shower, hand shower, shower thermostat, shower hose, slider · maximum flow rate at 0.3 MPa: 16 l/ min · overhead shower Raindance S 240 Air · shower head size: 240 mm · ball-joint: overhead shower angle adjustable · spray type: RainAir · flow rate RainAir spray (at 0.3 MPa): 16 l/ min · operating pressure: min. 0.15 MPa/ max. 1.0 MPa · fully chrome-plated spray disc · shower arm length: 460 mm · swivel shower arm · thermostat Ecostat Comfort · safety lock at 40° C · adjustable hot water limitation · outlets controlled via turning handle · installation type: exposed installation · connection dimension DN15 · connection thread G ½ · centre distance 150 ± 12 mm · height-adjustable hand shower holder · rising pipe can be shortened in height **Consisting of:** · Isiflex Shower hose 160 cm (# 28276XXX) · Raindance Select S Hand shower 120 3jet (# 26530XXX)	Chrome	27115000	824.00
Water saving EcoSmart version: · Raindance S Showerpipe 240 1jet EcoSmart 9 l/ min with thermostat	Chrome	27116000	824.00
Optional parts: · Wall bar spacer	Chrome	98681000	13.20

Measurements within scale drawings are in mm.



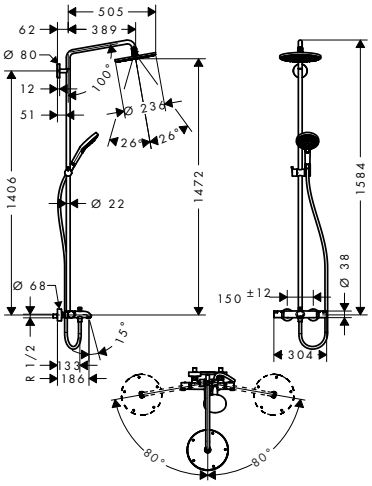

	finish	code no.	Euro
Raindance S Showerpipe 240 1jet with bath thermostat · consists of: overhead shower, hand shower, bath thermostat, shower hose, slider · overhead shower Raindance S 240 Air · shower head size: 240 mm · ball-joint: overhead shower angle adjustable · spray type: RainAir · flow rate RainAir spray (at 0.3 MPa): 17 l/ min · operating pressure: min. 0.15 MPa/ max. 1.0 MPa · fully chrome-plated spray disc · shower arm length: 460 mm · swivel shower arm · thermostat Ecostat Comfort · flow rate bath filler: 20 l/ min · safety lock at 40° C · adjustable hot water limitation · outlets controlled via turning handle · installation type: exposed installation · connection dimension DN15 · connection thread G ½ · centre distance 150 ± 12 mm · height-adjustable hand shower holder · rising pipe can be shortened in height	Chrome	27117000	1,042.50
Consisting of: · Isiflex Shower hose 200 cm (# 28274000) · Raindance Select S Hand shower 120 3jet (# 26530XXX)			
Optional parts: · Wall bar spacer	Chrome	98681000	13.20

Measurements within scale drawings are in mm.

Technical specifications and units of measure are subject to change.

Croma Select E Showerpipes



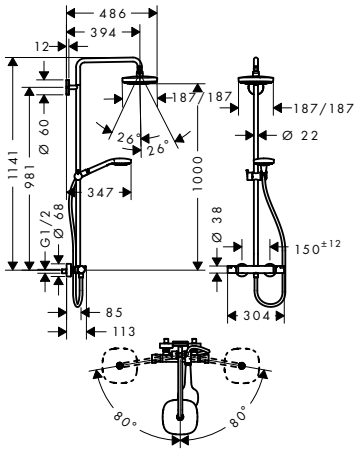

	finish	code no.	Euro
Croma Select E Showerpipe 180 2jet with thermostat · consists of: overhead shower, hand shower, shower thermostat, shower hose, slider · overhead shower Croma Select E 180 2jet · shower head size: 180 x 180 mm · ball-joint: overhead shower angle adjustable · spray type: Rain, IntenseRain · convenient diversion via Select button · flow rate IntenseRain spray (at 0.3 MPa): 16 l/min · flow rate Rain spray (at 0.3 MPa): 16 l/min · operating pressure: min. 0.11 MPa/max. 1.0 MPa · shower arm length: 400 mm · swivel shower arm · thermostat Ecostat Comfort · safety lock at 40° C · adjustable hot water limitation · outlets controlled via turning handle · installation type: exposed installation · connection dimension DN15 · connection thread G ½ · centre distance 150 ± 12 mm · height-adjustable hand shower holder · rising pipe can be shortened in height	White/Chrome	27256400	663.40
Consisting of: · Isiflex Shower hose 160 cm (# 28276XXX) · Croma Select E Overhead shower 180 2jet (# 26524XXX) · Croma Select E Hand shower Multi (# 26810400)			
Water saving EcoSmart version: · Croma Select E Showerpipe 180 2jet EcoSmart 9 l/min with thermostat	White/Chrome	27257400	663.40
Optional parts: · Wall bar spacer	Chrome	98681000	13.20

Measurements within scale drawings are in mm.

Technical specifications and units of measure are subject to change.

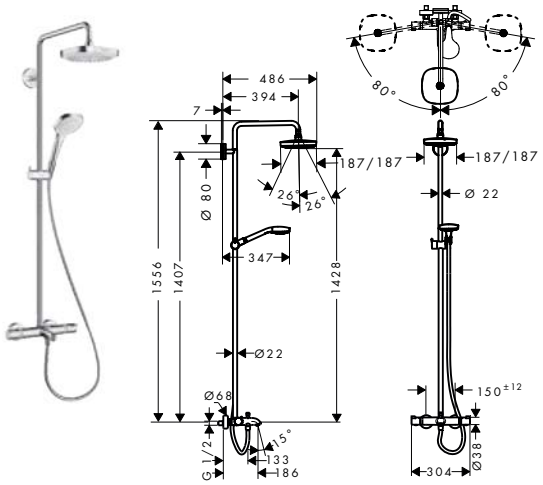

	finish	code no.	Euro
Croma Select E Showerpipe 180 2jet with bath thermostat · consists of: overhead shower, hand shower, bath thermostat, shower hose, slider · maximum flow rate at 0.3 MPa: 18 l/ min · overhead shower Croma Select E 180 2jet · shower head size: 180 x 180 mm · ball-joint: overhead shower angle adjustable · spray type: Rain, IntenseRain · flow rate IntenseRain spray (at 0.3 MPa): 17 l/ min · flow rate Rain spray (at 0.3 MPa): 17 l/ min · operating pressure: min. 0.1 MPa/ max. 1.0 MPa · swivel shower arm · thermostat Ecostat Comfort · flow rate bath filler: 20 l/ min · safety lock at 40° C · adjustable hot water limitation · outlets controlled via turning handle · installation type: exposed installation · connection dimension DN15 · connection thread G ½ · centre distance 150 ± 12 mm · height-adjustable hand shower holder · suitable for continuous flow water heaters with an output of 18 kW · rising pipe can be shortened in height	White/Chrome	27352400	837.90
Consisting of: · Croma Select E Hand shower Multi (# 26810400) · Croma Select E Overhead shower 180 2jet (# 26524XXX) · Isiflex Shower hose 200 cm (# 28274000)			
Optional parts: · Wall bar spacer	Chrome	98681000	13.20

Measurements within scale drawings are in mm.

Technical specifications and units of measure are subject to change.

	finish	code no.	Euro



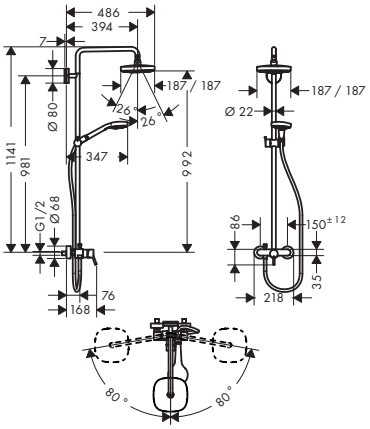

Croma Select E Showerpipe 180 2jet with single lever mixer — White/Chrome — 27258400 — 628.40

Select · Quick Clean · XXL Performance

- consists of: overhead shower, hand shower, single lever shower mixer, shower hose, slider
- overhead shower Croma Select E 180 2jet
- shower head size: 180 x 180 mm
- ball-joint: overhead shower angle adjustable
- spray type: Rain, IntenseRain
- flow rate IntenseRain spray (at 0.3 MPa): 16 l/min
- flow rate Rain spray (at 0.3 MPa): 16 l/min
- operating pressure: min. 0.15 MPa/max. 1.0 MPa
- shower arm length: 400 mm
- swivelling shower arm
- height-adjustable hand shower holder
- installation type: exposed installation
- connection dimension DN15
- connection thread G ½
- centre distance 150 ± 12 mm
- ceramic cartridge
- temperature limitation adjustable

Consisting of:

- Isiflex Shower hose 160 cm (# 28276XXX)
- Croma Select E Overhead shower 180 2jet (# 26524XXX)
- Croma Select E Hand shower Multi (# 26810400)

Optional parts:

- Wall bar spacer — Chrome — 98681000 — 13.20



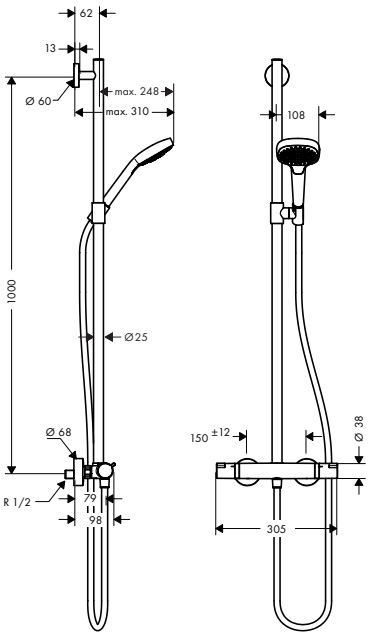

Croma Select E SemiPipe Multi with thermostat — White/Chrome — 27248400 — 325.80

Select · Quick Clean · XXL Performance

- consists of: hand shower, shower thermostat, shower hose, slider
- wallbar could be also used as grab bar
- TÜV certified
- thermostat Ecostat Comfort
- safety lock at 40° C
- adjustable hot water limitation
- outlets controlled via turning handle
- installation type: exposed installation
- connection dimension DN15
- connection thread G ½
- centre distance 150 ± 12 mm
- height-adjustable hand shower holder
- wall bar: 900 mm

Consisting of:

- Isiflex Shower hose 160 cm (# 28276XXX)
- Croma Select E Hand shower Multi (# 26810400)

Measurements within scale drawings are in mm.

Technical specifications and units of measure are subject to change.

Croma Select S Showerpipes



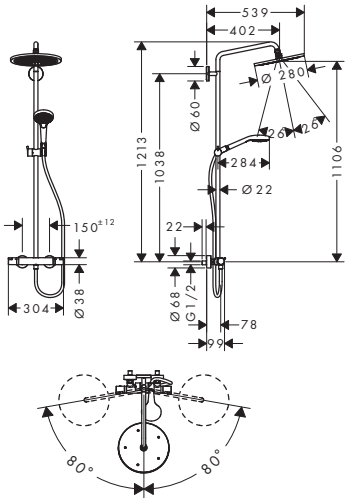

	finish	code no.	Euro
Croma Select S Showerpipe 280 1jet with thermostat · consists of: overhead shower, hand shower, shower thermostat, shower hose, slider · overhead shower Croma 280 · shower head size: 280 mm · ball-joint: overhead shower angle adjustable · spray type: RainAir · flow rate RainAir spray (at 0.3 MPa): 16 l/min · operating pressure: min. 0.1 MPa/max. 1.0 MPa · shower arm length: 400 mm · swivel shower arm · thermostat Ecostat Comfort · safety lock at 40° C · adjustable hot water limitation · outlets controlled via turning handle · installation type: exposed installation · connection dimension DN15 · connection thread G ½ · centre distance 150 ± 12 mm · height-adjustable hand shower holder · suitable for continuous flow water heaters with an output of 18 kW · rising pipe can be shortened in height	Chrome	26790000	750.40
Consisting of: · Isiflex Shower hose 160 cm (# 28276XXX) · Croma Overhead shower 280 1jet (# 26220XXX) · Croma Select S Hand shower Multi (# 26800400)			
Water saving EcoSmart version: · Croma Select S Showerpipe 280 1jet EcoSmart 9 l/min with thermostat	Chrome	26794000	752.40
Optional parts: · Wall bar spacer	Chrome	98681000	13.20

Air Power · Quick Clean · XXL Performance

Measurements within scale drawings are in mm.

Technical specifications and units of measure are subject to change.

NEW

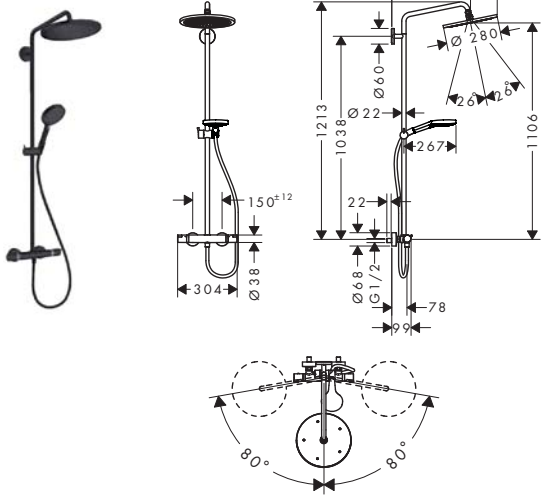

	finish	code no.	Euro
Croma Select S Showerpipe 280 1jet with thermostat and hand shower Raindance Select S 120 3jet	Brushed Bronze	26890140	1,162.00
	Brushed Black Chrome	26890340	1,162.00
	Matt Black	26890670	1,085.00
	Matt White	26890700	1,085.00
	Polished Gold Optic	26890990	1,162.00

Air Power · Quick Clean · XXL Performance

available from April 2020

- consists of: overhead shower, hand shower, shower thermostat, shower hose, slider
- maximum flow rate at 0.3 MPa: 16 l/min
- overhead shower Croma 280
- shower head size: 280 mm
- ball-joint: overhead shower angle adjustable
- spray type: RainAir
- flow rate RainAir spray (at 0.3 MPa): 16 l/min
- operating pressure: min. 0.1 MPa/max. 1.0 MPa
- shower arm length: 400 mm
- swivel shower arm
- thermostat Ecostat Comfort
- safety lock at 40° C
- adjustable hot water limitation
- outlets controlled via turning handle
- installation type: exposed installation
- connection dimension DN15
- connection thread G ½
- centre distance 150 ± 12 mm
- height-adjustable hand shower holder
- suitable for continuous flow water heaters with an output of 18 kW
- rising pipe can be shortened in height

Consisting of:

- Isiflex Shower hose 160 cm (# 28276XXX)
- Croma Overhead shower 280 1jet (# 26220XXX)
- Raindance Select S Hand shower 120 3jet (# 26530XXX)

Water saving EcoSmart version:

NEW

Croma Select S Showerpipe 280 1jet EcoSmart 9 l/min with thermostat and hand shower Raindance Select S 120 3jet	Brushed Bronze	26891140	1,165.00
	Brushed Black Chrome	26891340	1,165.00
	Matt Black	26891670	1,088.00
	Matt White	26891700	1,088.00
	Polished Gold Optic	26891990	1,165.00

Optional parts:

Wall bar spacer	Chrome	98681000	13.20

Measurements within scale drawings are in mm.

Technical specifications and units of measure are subject to change.

	finish	code no.	Euro



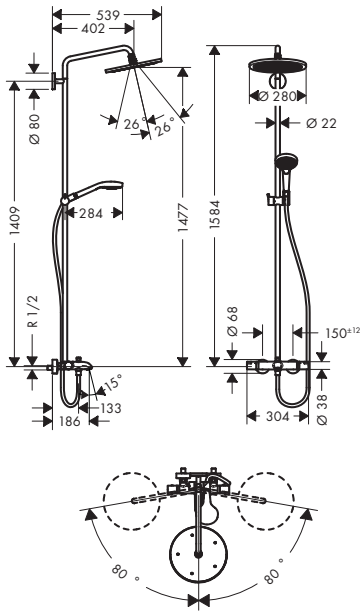

Croma Select S Showerpipe 280 1jet with bath thermostat — Chrome — 26792000 — 913.40

Air Power · Quick Clean · XXL Performance

- consists of: overhead shower, hand shower, bath thermostat, shower hose, slider
- overhead shower Croma 280
- shower head size: 280 mm
- ball-joint: overhead shower angle adjustable
- spray type: RainAir
- flow rate RainAir spray (at 0.3 MPa): 16 l/ min
- operating pressure: min. 0.14 MPa/ max. 1.0 MPa
- swivel shower arm
- thermostat Ecostat Comfort
- flow rate bath filler: 20 l/ min
- safety lock at 40° C
- adjustable hot water limitation
- outlets controlled via turning handle
- installation type: exposed installation
- connection dimension DN15
- connection thread G ½
- centre distance 150 ± 12 mm
- height-adjustable hand shower holder
- rising pipe can be shortened in height

Consisting of:

- Isiflex Shower hose 200 cm (# 28274000)
- Croma Select S Hand shower Multi (# 26800400)
- Croma Overhead shower 280 1jet (# 26220XXX)

Optional parts:

- Wall bar spacer — Chrome — 98681000 — 13.20



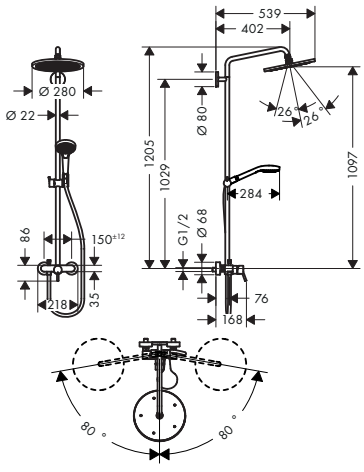

Croma Select S Showerpipe 280 1jet with single lever mixer — Chrome — 26791000 — 717.70

Air Power · Quick Clean · XXL Performance

- consists of: overhead shower, hand shower, single lever shower mixer, shower hose, slider
- overhead shower Croma 280
- shower head size: 280 mm
- ball-joint: overhead shower angle adjustable
- spray type: RainAir
- maximum flow rate at 0.3 MPa: 15 l/ min
- flow rate RainAir spray (at 0.3 MPa): 15 l/ min
- operating pressure: min. 0.1 MPa/ max. 1.0 MPa
- fully chrome-plated spray disc
- shower arm length: 400 mm
- swivelling shower arm
- height-adjustable hand shower holder
- installation type: exposed installation
- connection dimension DN15
- connection thread G ½
- centre distance 150 ± 12 mm
- ceramic cartridge
- temperature limitation adjustable

Consisting of:

- Isiflex Shower hose 160 cm (# 28276XXX)
- Croma Overhead shower 280 1jet (# 26220XXX)
- Croma Select S Hand shower Multi (# 26800400)

Optional parts:

- Wall bar spacer — Chrome — 98681000 — 13.20

Measurements within scale drawings are in mm.

Technical specifications and units of measure are subject to change.

	finish	code no.	Euro
Croma Select S Showerpipe 280 1jet Reno · consists of: overhead shower, hand shower, shower hose, slider · overhead shower Croma 280 · shower head size: 280 mm · ball-joint: overhead shower angle adjustable · spray type: RainAir · flow rate RainAir spray (at 0.3 MPa): 10 l/ min · fully chrome-plated spray disc · swivelling shower arm · shower arm length: 400 mm · height-adjustable hand shower holder · outlet: overhead shower, hand shower · water connection: Isiflex shower hose 0.80 m · installation type: exposed installation · connection thread G ½ · connection dimension: DN15 · scope of supply: Showerpipe Reno, escutcheon, mounting material, assembly instruction	Chrome	26793000	674.20
Consisting of: · Isiflex Shower hose 160 cm (# 28276XXX) · Isiflex Shower hose B 80 cm (# 28278000) · Croma Overhead shower 280 1jet (# 26220XXX) · Croma Select S Hand shower Multi (# 26800400)			
Optional parts: · Wall bar spacer	Chrome	98681000	13.20



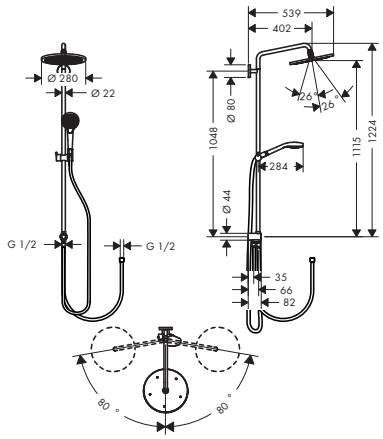

Measurements within scale drawings are in mm.

Technical specifications and units of measure are subject to change.



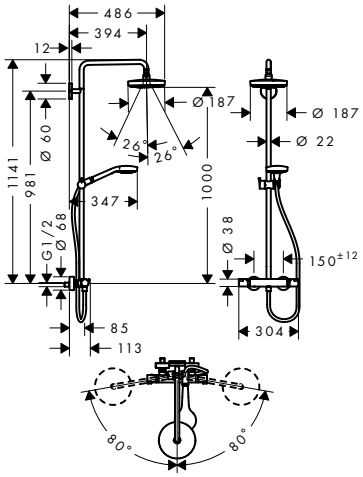

	finish	code no.	Euro
Croma Select S Showerpipe 180 2jet with thermostat · consists of: overhead shower, hand shower, shower thermostat, shower hose, slider · overhead shower Croma Select S 180 2jet · shower head size: 180 mm · ball-joint: overhead shower angle adjustable · spray type: Rain, IntenseRain · convenient diversion via Select button · flow rate IntenseRain spray (at 0.3 MPa): 16 l/min · flow rate Rain spray (at 0.3 MPa): 16 l/min · operating pressure: min. 0.15 MPa/max. 1.0 MPa · shower arm length: 400 mm · swivel shower arm · thermostat Ecostat Comfort · safety lock at 40° C · adjustable hot water limitation · outlets controlled via turning handle · installation type: exposed installation · connection dimension DN15 · connection thread G ½ · centre distance 150 ± 12 mm · height-adjustable hand shower holder · rising pipe can be shortened in height	White/Chrome	27253400	663.40
Consisting of: · Isiflex Shower hose 160 cm (# 28276XXX) · Croma Select S Overhead shower 180 2jet (# 26522XXX) · Croma Select S Hand shower Multi (# 26800400)			
Water saving EcoSmart version: · Croma Select S Showerpipe 180 2jet EcoSmart 9 l/min with thermostat	White/Chrome	27254400	663.40
Optional parts: · Wall bar spacer	Chrome	98681000	13.20

Measurements within scale drawings are in mm.

Technical specifications and units of measure are subject to change.

	finish	code no.	Euro

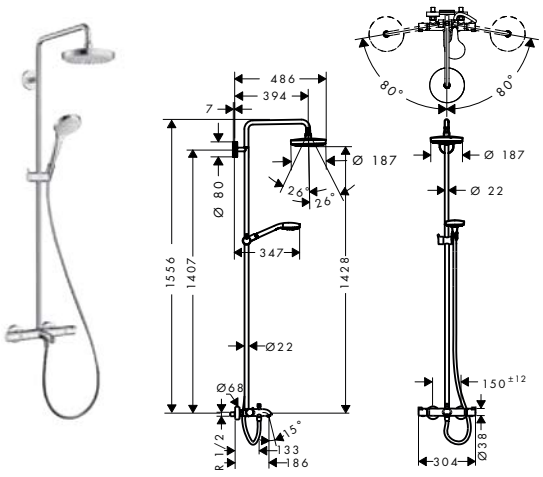

Croma Select S Showerpipe 180 2jet with bath thermostat — White/Chrome — 27351400 — 837.90

Select · Quick Clean · XXL Performance

- consists of: overhead shower, hand shower, bath thermostat, shower hose, slider
- overhead shower Croma Select S 180 2jet
- shower head size: 180 mm
- ball-joint: overhead shower angle adjustable
- spray type: Rain, IntenseRain
- convenient diversion via Select button
- flow rate IntenseRain spray (at 0.3 MPa): 17 l/min
- flow rate Rain spray (at 0.3 MPa): 17 l/min
- operating pressure: min. 0.1 MPa/max. 1.0 MPa
- swivel shower arm
- thermostat Ecostat Comfort
- flow rate bath filler: 20 l/min
- safety lock at 40° C
- adjustable hot water limitation
- outlets controlled via turning handle
- installation type: exposed installation
- connection dimension DN15
- connection thread G ½
- centre distance 150 ± 12 mm
- height-adjustable hand shower holder
- rising pipe can be shortened in height

Consisting of:

- Croma Select S Overhead shower 180 2jet (# 26522XXX)
- Croma Select S Hand shower Multi (# 26800400)
- Isiflex Shower hose 200 cm (# 28274000)

Optional parts:

- Wall bar spacer — Chrome — 98681000 — 13.20

Measurements within scale drawings are in mm.

Technical specifications and units of measure are subject to change.

	finish	code no.	Euro



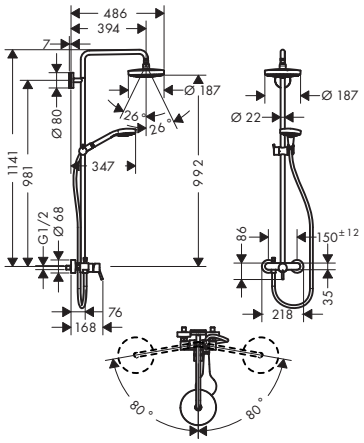

Croma Select S Showerpipe 180 2jet with single lever mixer — White/Chrome — 27255400 — 628.40

Select · Quick Clean · XXL Performance

- consists of: overhead shower, hand shower, single lever shower mixer, shower hose, slider
- overhead shower Croma Select S 180 2jet
- shower head size: 180 mm
- ball-joint: overhead shower angle adjustable
- spray type: Rain, IntenseRain
- convenient diversion via Select button
- flow rate IntenseRain spray (at 0.3 MPa): 16 l/min
- flow rate Rain spray (at 0.3 MPa): 16 l/min
- operating pressure: min. 0.15 MPa/max. 1.0 MPa
- shower arm length: 400 mm
- swivelling shower arm
- height-adjustable hand shower holder
- installation type: exposed installation
- connection dimension DN15
- connection thread G ½
- centre distance 150 ± 12 mm
- ceramic cartridge
- temperature limitation adjustable

Consisting of:
- Isiflex Shower hose 160 cm (# 28276XXX)
- Croma Select S Overhead shower 180 2jet (# 26522XXX)
- Croma Select S Hand shower Multi (# 26800400)

Optional parts:
- Wall bar spacer — Chrome — 98681000 — 13.20



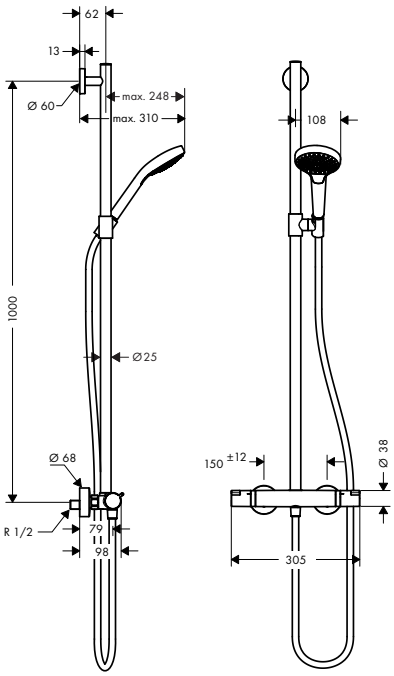

Croma Select S SemiPipe Multi with thermostat — White/Chrome — 27247400 — 325.80

Select · Quick Clean · XXL Performance

- consists of: hand shower, shower thermostat, shower hose, slider
- wallbar could be also used as grab bar
- TÜV certified
- thermostat Ecostat Comfort
- safety lock at 40° C
- adjustable hot water limitation
- outlets controlled via turning handle
- installation type: exposed installation
- connection dimension DN15
- connection thread G ½
- centre distance 150 ± 12 mm
- height-adjustable hand shower holder
- wall bar: 900 mm

Consisting of:
- Isiflex Shower hose 160 cm (# 28276XXX)
- Croma Select S Hand shower Multi (# 26800400)

Measurements within scale drawings are in mm.

Technical specifications and units of measure are subject to change.

Croma E

	finish	code no.	Euro

NEW



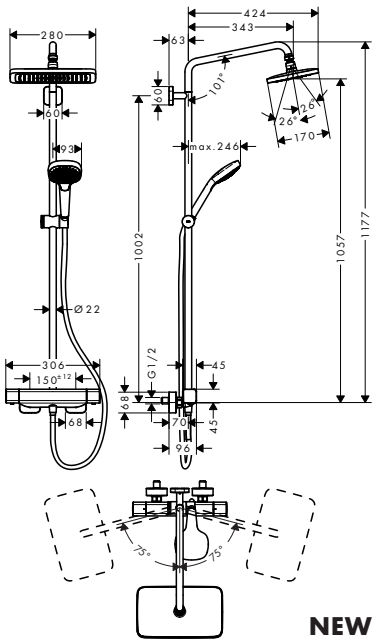

Croma E Showerpipe 280 1jet with thermostat

- consists of: overhead shower, hand shower, shower thermostat, shower hose, slider
- maximum flow rate at 0.3 MPa: 15 l/min
- shower head size: 280 mm
- ball-joint: overhead shower angle adjustable
- spray type: RainAir
- swivel shower arm
- CoolContact thermostat: Prevents the housing from heating up, making showering even safer
- thermostat Ecostat E
- safety lock at 40° C
- installation type: exposed installation
- centre distance 150 ± 12 mm
- height-adjustable hand shower holder with external select button
- variable wall support
- suitable for continuous flow water heaters with an output of 18 kW
- rising pipe can be shortened in height

finish	code no.	Euro
Chrome	27630000	710.00

Cool Contact · Air Power · Quick Clean · XXL Performance

Consisting of:

NEW
- Croma E Overhead shower 280 1jet (# 26257000)

NEW
- Ecostat E Shower thermostat for exposed installation (# 15773000)
- Croma Select E Hand shower Multi (# 26810400)
- Isiflex Shower hose 160 cm (# 28276XXX)

Water saving EcoSmart version:

NEW
- Croma E Showerpipe 280 1jet EcoSmart with thermostat

finish	code no.	Euro
Chrome	27660000	710.00

NEW



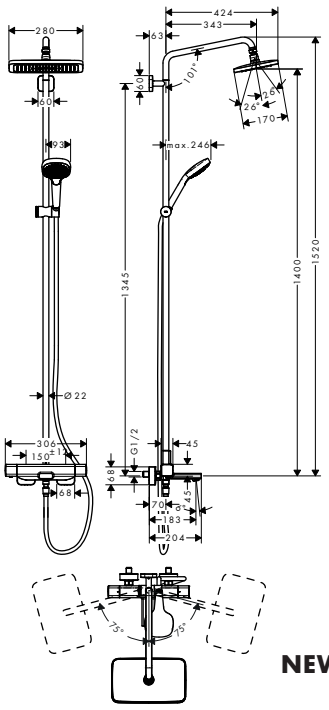

Croma E Showerpipe 280 1jet with bath thermostat

- consists of: overhead shower, hand shower, bath thermostat, shower hose, slider
- maximum flow rate at 0.3 MPa: 20.3 l/min
- shower head size: 280 mm
- ball-joint: overhead shower angle adjustable
- spray type: RainAir
- flow rate RainAir spray (at 0.3 MPa): 15 l/min
- swivel shower arm
- CoolContact thermostat: Prevents the housing from heating up, making showering even safer
- thermostat Ecostat E
- flow rate bath filler: 20 l/min
- safety lock at 40° C
- installation type: exposed installation
- centre distance 150 ± 12 mm
- height-adjustable hand shower holder with external select button

finish	code no.	Euro
Chrome	27687000	875.00

Cool Contact · Air Power · Quick Clean · XXL Performance

Consisting of:

NEW
- Croma E Overhead shower 280 1jet (# 26257000)

NEW
- Croma Select E Hand shower Multi (# 26810400)
- Ecostat E Bath thermostat for exposed installation (# 15774000)
- Isiflex Shower hose 160 cm (# 28276XXX)

Measurements within scale drawings are in mm.

Technical specifications and units of measure are subject to change.

Croma Showerpipes

	finish	code no.	Euro



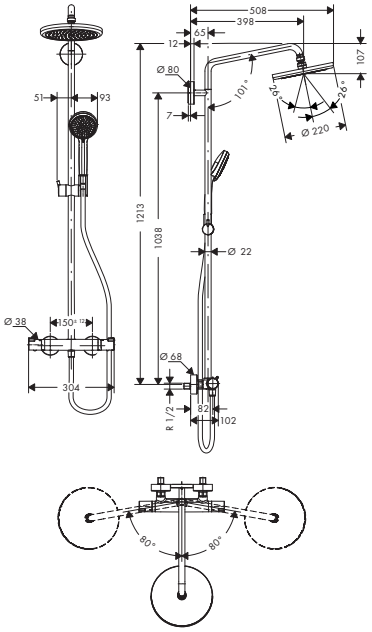

Croma Showerpipe 220 1jet with thermostat — Chrome — 27185000 — 655.10

Air Power · Quick Clean · XXL Performance

- consists of: overhead shower, hand shower, shower thermostat, shower hose, slider
- maximum flow rate at 0.3 MPa: 15 l/ min
- overhead shower Croma 220
- shower head size: 220 mm
- ball-joint: overhead shower angle adjustable
- spray type: RainAir
- operating pressure: min. 0.13 MPa/ max. 1.0 MPa
- shower arm length: 400 mm
- swivel shower arm
- thermostat Ecostat Comfort
- safety lock at 40° C
- adjustable hot water limitation
- outlets controlled via turning handle
- installation type: exposed installation
- connection dimension DN15
- connection thread G ½
- centre distance 150 ± 12 mm
- height-adjustable hand shower holder
- rising pipe can be shortened in height

Consisting of:
- Isiflex Shower hose 160 cm (# 28276XXX)
- Croma 100 Hand shower Vario (# 28535000)
- Croma Overhead shower 220 1jet (# 26464000)

Water saving EcoSmart version:
- Croma Showerpipe 220 1jet EcoSmart 9 l/ min with thermostat — Chrome — 27188000 — 655.10

Optional parts:
- Wall bar spacer — Chrome — 98681000 — 13.20



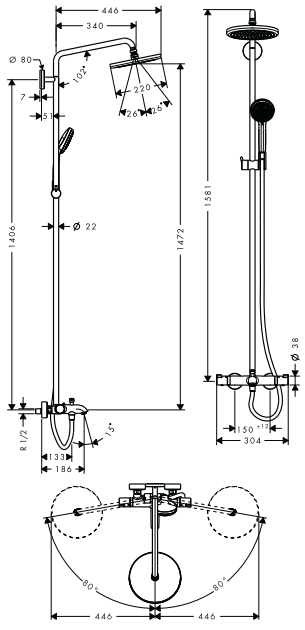

Croma Showerpipe 220 1jet with bath thermostat — Chrome — 27223000 — 850.70

Air Power · Quick Clean · XXL Performance

- consists of: overhead shower, hand shower, bath thermostat, shower hose, slider
- overhead shower Croma 220
- shower head size: 220 mm
- ball-joint: overhead shower angle adjustable
- spray type: RainAir
- flow rate RainAir spray (at 0.3 MPa): 17 l/ min
- operating pressure: min. 0.15 MPa/ max. 1.0 MPa
- swivel shower arm
- thermostat Ecostat Comfort
- flow rate bath filler: 20 l/ min
- safety lock at 40° C
- adjustable hot water limitation
- outlets controlled via turning handle
- installation type: exposed installation
- connection dimension DN15
- connection thread G ½
- centre distance 150 ± 12 mm
- height-adjustable hand shower holder

Consisting of:
- Croma Overhead shower 220 1jet (# 26464000)
- Croma 100 Hand shower Vario (# 28535000)
- Isiflex Shower hose 200 cm (# 28274000)

Optional parts:
- Wall bar spacer — Chrome — 98681000 — 13.20

Measurements within scale drawings are in mm.

Technical specifications and units of measure are subject to change.

	finish	code no.	Euro
Croma Showerpipe 220 1jet with single lever mixer · consists of: overhead shower, hand shower, single lever shower mixer, shower hose, slider · overhead shower Croma 220 · shower head size: 220 mm · ball-joint: overhead shower angle adjustable · spray type: RainAir · flow rate RainAir spray (at 0.3 MPa): 16 l/min · operating pressure: min. 0.15 MPa/max. 1.0 MPa · fully chrome-plated spray disc · shower arm length: 400 mm · swivelling shower arm · height-adjustable hand shower holder · installation type: exposed installation · connection dimension DN15 · connection thread G ½ · centre distance 150 ± 12 mm · ceramic cartridge · temperature limitation adjustable **Consisting of:** · Croma Overhead shower 220 1jet (# 26464000) · Croma 100 Hand shower Vario (# 28535000) · Isiflex Shower hose 160 cm (# 28276XXX)	Chrome	27222000	615.50
Optional parts: · Wall bar spacer	Chrome	98681000	13.20
Croma Showerpipe 220 1jet Reno · consists of: overhead shower, hand shower, shower hose, slider · overhead shower Croma 220 · shower head size: 220 mm · ball-joint: overhead shower angle adjustable · spray type: RainAir · flow rate RainAir spray (at 0.3 MPa): 14 l/min · fully chrome-plated spray disc · swivelling shower arm · shower arm length: 400 mm · height-adjustable hand shower holder · outlet: overhead shower, hand shower · water connection: Isiflex shower hose 0.80 m · installation type: exposed installation · connection thread G ½ · connection dimension: DN15 · scope of supply: Showerpipe Reno, escutcheons, mounting material, assembly instruction **Consisting of:** · Croma Overhead shower 220 1jet (# 26464000) · Croma 100 Hand shower Vario (# 28535000) · Isiflex Shower hose 160 cm (# 28276XXX) · Isiflex Shower hose B 80 cm (# 28278000)	Chrome	27224000	497.40
Optional parts: · Wall bar spacer	Chrome	98681000	13.20

Measurements within scale drawings are in mm.

Technical specifications and units of measure are subject to change.

	finish	code no.	Euro

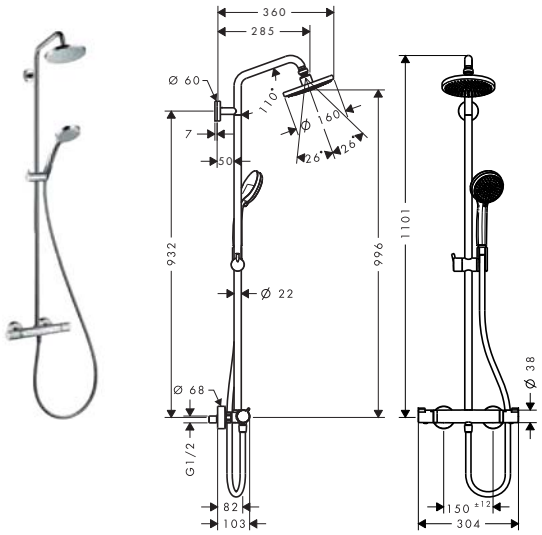

Croma Showerpipe 160 1jet with thermostat — Chrome — 27135000 — 463.30

Quick Clean · XXL Performance

- consists of: overhead shower, hand shower, shower thermostat, shower hose, slider
- maximum flow rate at 0.3 MPa: 17 l/ min
- overhead shower Croma 160
- shower head size: 160 mm
- ball-joint: overhead shower angle adjustable
- spray type: Rain
- operating pressure: min. 0.15 MPa/ max. 1.0 MPa
- shower arm length: 270 mm
- thermostat Ecostat Comfort
- safety lock at 40° C
- adjustable hot water limitation
- outlets controlled via turning handle
- installation type: exposed installation
- connection dimension DN15
- connection thread G ½
- centre distance 150 ± 12 mm
- height-adjustable hand shower holder
- rising pipe can be shortened in height

Consisting of:

- Croma Overhead shower 160 1jet (# 27450000)
- Croma 100 Hand shower Vario (# 28535000)
- Isiflex Shower hose 160 cm (# 28276XXX)

Optional parts:

- Wall bar spacer for Croma 100 Showerpipe — Chrome — 95239000 — 10.10

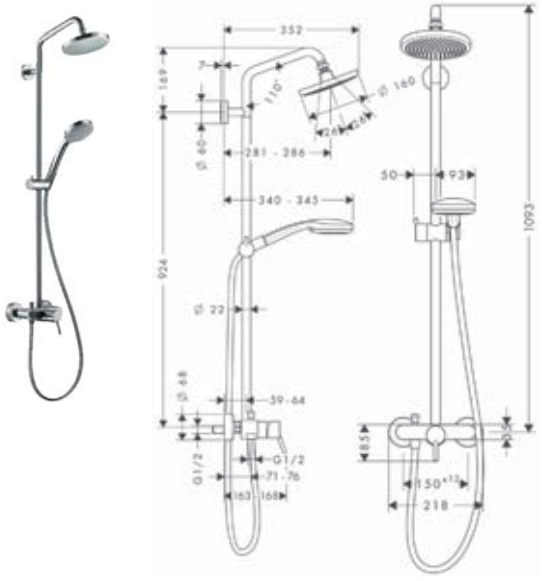

Croma Showerpipe 160 1jet with single lever mixer — Chrome — 27154000 — 453.80

Quick Clean

- consists of: overhead shower, hand shower, single lever shower mixer, shower hose, slider
- adjustable hot water limitation
- overhead shower Croma 160
- shower head size: 160 mm
- ball-joint: overhead shower angle adjustable
- spray type: Rain
- flow rate Rain spray (at 0.3 MPa): 16 l/ min
- operating pressure: min. 0.12 MPa/ max. 1.0 MPa
- shower arm length: 270 mm
- height-adjustable hand shower holder
- installation type: exposed installation
- connection dimension DN15
- connection thread G ½
- centre distance 150 ± 12 mm
- ceramic cartridge

Consisting of:

- Isiflex Shower hose 160 cm (# 28276XXX)
- Croma Overhead shower 160 1jet (# 27450000)
- Croma 100 Hand shower Vario (# 28535000)

Optional parts:

- Wall bar spacer for Croma 100 Showerpipe — Chrome — 95239000 — 10.10

Measurements within scale drawings are in mm.

Technical specifications and units of measure are subject to change.

Crometta E Showerpipes

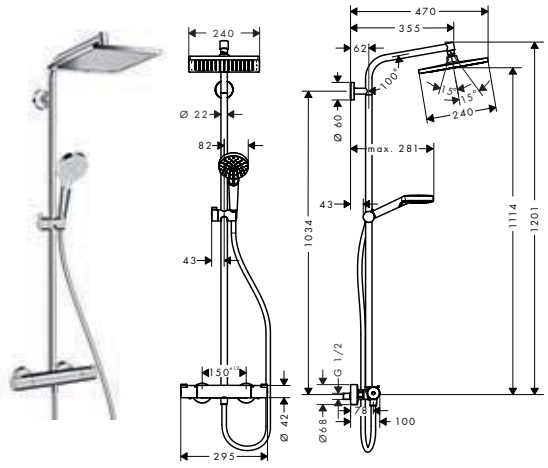

	finish	code no.	Euro
Crometta E Showerpipe 240 1jet with thermostat · consists of: overhead shower, hand shower, shower thermostat, shower hose, slider · slide inclination angle can be adjusted by 45° · overhead shower Crometta E 240 · shower head size: 240 x 240 mm · ball-joint: overhead shower angle adjustable · spray type: Rain · flow rate Rain spray (at 0.3 MPa): 15 l/min · operating pressure: min. 0.18 MPa/max. 1.0 MPa · fully chrome-plated spray disc · shower arm length: 350 mm · thermostat Ecostat 1001 CL · safety lock at 40° C · adjustable hot water limitation · outlets controlled via turning handle · installation type: exposed installation · connection dimension DN15 · connection thread G ½ · centre distance 150 ± 12 mm · height-adjustable hand shower holder · rising pipe can be shortened in height	Chrome	27271000	424.10
Consisting of: · Crometta E Overhead shower 240 1jet (# 26726000) · Crometta Hand shower Vario (# 26330400) · Isiflex Shower hose 160 cm (# 28276XXX)			
Water saving EcoSmart version: · Crometta E Showerpipe 240 1jet EcoSmart 9 l/min with thermostat	Chrome	27281000	426.20
Optional parts: · Wall bar spacer for Croma 100 Showerpipe	Chrome	95239000	10.10

Measurements within scale drawings are in mm.

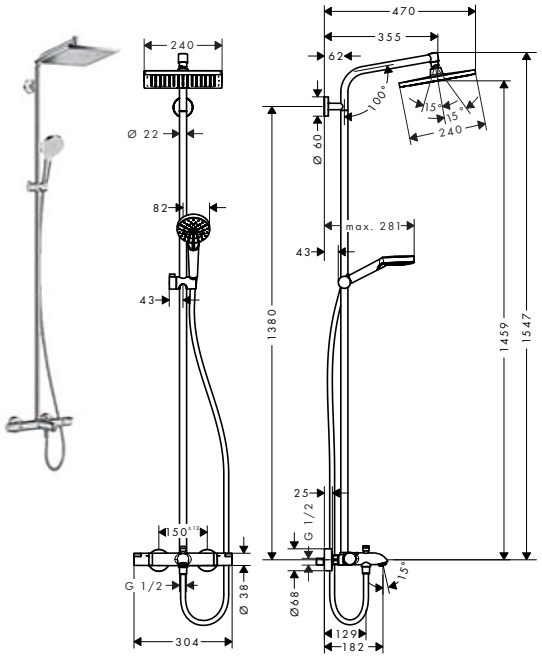

	finish	code no.	Euro
Crometta E Showerpipe 240 1jet with bath thermostat · consists of: overhead shower, hand shower, bath thermostat, shower hose, slider · slide inclination angle can be adjusted by 45° · overhead shower Crometta E 240 · shower head size: 240 x 240 mm · ball-joint: overhead shower angle adjustable · spray type: Rain · flow rate Rain spray (at 0.3 MPa): 17 l/ min · operating pressure: min. 0.15 MPa/ max. 1.0 MPa · fully chrome-plated spray disc · shower arm length: 350 mm · thermostat Ecostat Comfort · flow rate bath filler: 20 l/ min · safety lock at 40° C · adjustable hot water limitation · outlets controlled via turning handle · installation type: exposed installation · connection dimension DN15 · connection thread G ½ · centre distance 150 ± 12 mm · height-adjustable hand shower holder · rising pipe can be shortened in height	Chrome	27298000	587.30
Consisting of: · Crometta E Overhead shower 240 1jet (# 26726000) · Crometta Hand shower Vario (# 26330400) · Isiflex Shower hose 160 cm (# 28276XXX)			
Optional parts: · Wall bar spacer for Croma 100 Showerpipe	Chrome	95239000	10.10

Measurements within scale drawings are in mm.

Technical specifications and units of measure are subject to change.

	finish	code no.	Euro

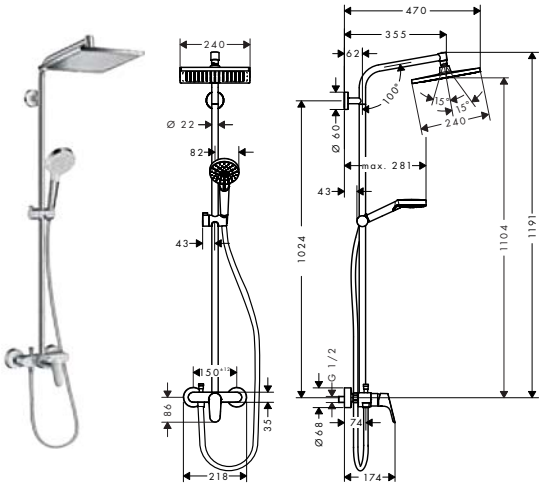

Crometta E Showerpipe 240 1jet with single lever mixer — Chrome — 27284000 — 391.50

Quick Clean · XXL Performance

- consists of: overhead shower, hand shower, single lever shower mixer, shower hose, slider
- slide inclination angle can be adjusted by 45°
- adjustable hot water limitation
- overhead shower Crometta E 240
- shower head size: 240 x 240 mm
- ball-joint: overhead shower angle adjustable
- spray type: Rain
- maximum flow rate at 0.3 MPa: 13 l/min
- flow rate Rain spray (at 0.3 MPa): 15 l/min
- operating pressure: min. 0.18 MPa/max. 1.0 MPa
- fully chrome-plated spray disc
- shower arm length: 350 mm
- height-adjustable hand shower holder
- installation type: exposed installation
- connection dimension DN15
- connection thread G ½
- centre distance 150 ± 12 mm
- ceramic cartridge

Consisting of:

- Crometta E Overhead shower 240 1jet (# 26726000)
- Crometta Hand shower Vario (# 26330400)
- Isiflex Shower hose 160 cm (# 28276XXX)

Optional parts:

- Wall bar spacer for Croma 100 Showerpipe — Chrome — 95239000 — 10.10

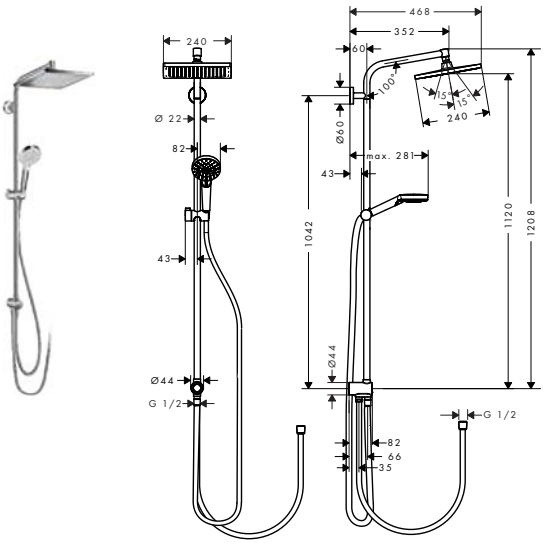

Crometta E Showerpipe 240 1jet EcoSmart 9 l/min Reno — Chrome — 27289000 — 348.00

Eco Smart · Quick Clean · XXL Performance

- consists of: overhead shower, hand shower, shower hose, slider, wall outlet
- slide inclination angle can be adjusted by 45°
- overhead shower Crometta E 240
- shower head size: 240 x 240 mm
- ball-joint: overhead shower angle adjustable
- spray type: Rain
- flow rate Rain spray (at 0.3 MPa): 9 l/min
- fully chrome-plated spray disc
- shower arm length: 350 mm
- height-adjustable hand shower holder
- outlet: overhead shower, hand shower
- water connection: Isiflex shower hose 0.80 m
- installation type: exposed installation
- connection thread G ½
- connection dimension: DN15
- scope of supply: Showerpipe Reno, escutcheon, mounting material, assembly instruction

Consisting of:

- Crometta E Overhead shower 240 1jet EcoSmart 9 l/min (# 26727000)
- Crometta Hand shower Vario EcoSmart 9 l/min (# 26332400)
- Isiflex Shower hose 160 cm (# 28276XXX)
- Isiflex Shower hose B 80 cm (# 28278000)

Optional parts:

- Wall bar spacer for Croma 100 Showerpipe — Chrome — 95239000 — 10.10

Measurements within scale drawings are in mm.

Technical specifications and units of measure are subject to change.

Crometta S Showerpipes



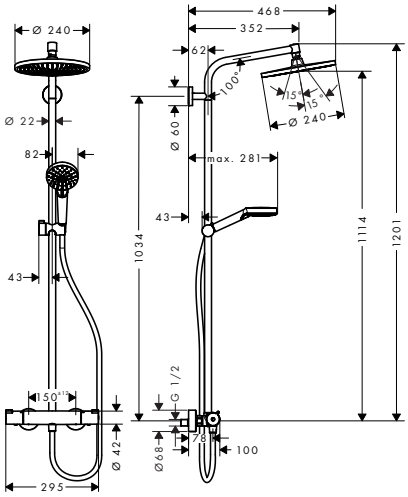

	finish	code no.	Euro
Crometta S Showerpipe 240 1jet with thermostat · consists of: overhead shower, hand shower, shower thermostat, shower hose, slider · slide inclination angle can be adjusted by 45° · overhead shower Crometta S 240 · shower head size: 240 mm · ball-joint: overhead shower angle adjustable · spray type: Rain · flow rate Rain spray (at 0.3 MPa): 16 l/min · operating pressure: min. 0.12 MPa/max. 1.0 MPa · fully chrome-plated spray disc · shower arm length: 350 mm · thermostat Ecostat 1001 CL · safety lock at 40° C · adjustable hot water limitation · outlets controlled via turning handle · installation type: exposed installation · connection dimension DN15 · connection thread G ½ · centre distance 150 ± 12 mm · height-adjustable hand shower holder · rising pipe can be shortened in height	Chrome	27267000	424.10
Consisting of: · Crometta S Overhead shower 240 1jet (# 26723XXX) · Crometta Hand shower Vario (# 26330400) · Isiflex Shower hose 160 cm (# 28276XXX)			
Water saving EcoSmart version: · Crometta S Showerpipe 240 1jet EcoSmart 9 l/min with thermostat	Chrome	27268000	426.20
Optional parts: · Wall bar spacer for Croma 100 Showerpipe	Chrome	95239000	10.10

Measurements within scale drawings are in mm.

Technical specifications and units of measure are subject to change.



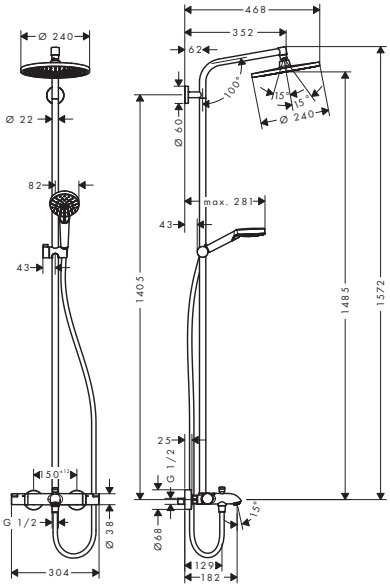

	finish	code no.	Euro
Crometta S Showerpipe 240 1jet with bath thermostat · consists of: overhead shower, hand shower, bath thermostat, shower hose, slider · slide inclination angle can be adjusted by 45° · overhead shower Crometta S 240 · shower head size: 240 mm · ball-joint: overhead shower angle adjustable · spray type: Rain · flow rate Rain spray (at 0.3 MPa): 17 l/ min · operating pressure: min. 0.15 MPa/ max. 1.0 MPa · fully chrome-plated spray disc · shower arm length: 350 mm · thermostat Ecostat Comfort · flow rate bath filler: 20 l/ min · safety lock at 40° C · adjustable hot water limitation · outlets controlled via turning handle · installation type: exposed installation · connection dimension DN15 · connection thread G ½ · centre distance 150 ± 12 mm · height-adjustable hand shower holder · rising pipe can be shortened in height	Chrome	27320000	587.30
Consisting of: · Crometta S Overhead shower 240 1jet (# 26723XXX) · Crometta Hand shower Vario (# 26330400) · Isiflex Shower hose 160 cm (# 28276XXX)			
Optional parts: · Wall bar spacer for Croma 100 Showerpipe	Chrome	95239000	10.10

Measurements within scale drawings are in mm.

	finish	code no.	Euro



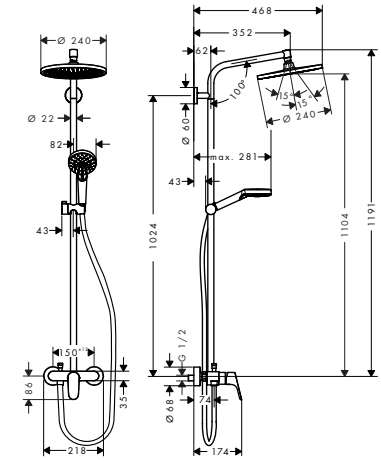

Crometta S Showerpipe 240 1jet with single lever mixer

- consists of: overhead shower, hand shower, single lever shower mixer, shower hose, slider
- slide inclination angle can be adjusted by 45°
- adjustable hot water limitation
- overhead shower Crometta S 240
- shower head size: 240 mm
- ball-joint: overhead shower angle adjustable
- spray type: Rain
- flow rate Rain spray (at 0.3 MPa): 15 l/min
- operating pressure: min. 0.18 MPa/max. 1.0 MPa
- fully chrome-plated spray disc
- shower arm length: 350 mm
- height-adjustable hand shower holder
- installation type: exposed installation
- connection dimension DN15
- connection thread G ½
- centre distance 150 ± 12 mm
- ceramic cartridge

Chrome | 27269000 | 391.50

Quick Clean | XXL Performance

Consisting of:

- Crometta S Overhead shower 240 1jet (# 26723XXX)
- Crometta Hand shower Vario (# 26330400)
- Isiflex Shower hose 160 cm (# 28276XXX)

Optional parts:

- Wall bar spacer for Croma 100 Showerpipe

Chrome | 95239000 | 10.10



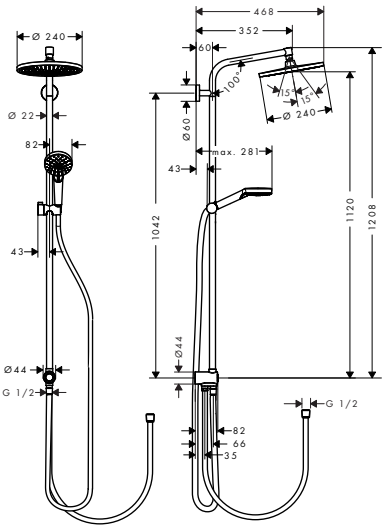

Crometta S Showerpipe 240 1jet EcoSmart 9 l/min Reno

- consists of: overhead shower, hand shower, shower hose, slider, wall outlet
- slide inclination angle can be adjusted by 45°
- overhead shower Crometta S 240
- shower head size: 240 mm
- ball-joint: overhead shower angle adjustable
- spray type: Rain
- flow rate Rain spray (at 0.3 MPa): 9 l/min
- fully chrome-plated spray disc
- shower arm length: 350 mm
- height-adjustable hand shower holder
- outlet: overhead shower, hand shower
- water connection: Isiflex shower hose 0.80 m
- installation type: exposed installation
- connection thread G ½
- connection dimension: DN15
- scope of supply: Showerpipe Reno, escutcheon, mounting material, assembly instruction

Chrome | 27270000 | 348.00

Eco Smart | Quick Clean | XXL Performance

Consisting of:

- Crometta S Overhead shower 240 1jet EcoSmart 9 l/min (# 26724000)
- Crometta Hand shower Vario EcoSmart 9 l/min (# 26332400)
- Isiflex Shower hose 160 cm (# 28276XXX)
- Isiflex Shower hose B 80 cm (# 28278000)

Optional parts:

- Wall bar spacer for Croma 100 Showerpipe

Chrome | 95239000 | 10.10

Measurements within scale drawings are in mm.

Technical specifications and units of measure are subject to change.

Crometta Showerpipes



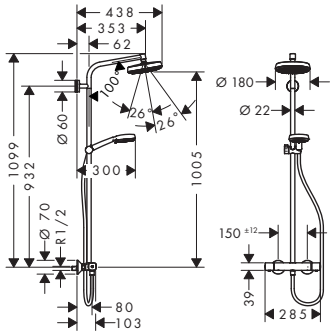

	finish	code no.	Euro
Crometta Showerpipe 160 1jet with thermostat · consists of: overhead shower, hand shower, shower thermostat, shower hose, slider · maximum flow rate at 0.3 MPa: 17 l/min · slide inclination angle can be adjusted by 45° · overhead shower Crometta 160 · shower head size: 160 mm · ball-joint: overhead shower angle adjustable · spray type: Rain · flow rate Rain spray (at 0.3 MPa): 17 l/min · operating pressure: min. 0.15 MPa/max. 1.0 MPa · shower arm length: 350 mm · thermostat Ecostat Universal · safety lock at 40° C · adjustable hot water limitation · outlets controlled via turning handle · installation type: exposed installation · connection dimension DN15 · connection thread G ½ · centre distance 150 ± 12 mm · height-adjustable hand shower holder · rising pipe can be shortened in height	White/Chrome	27264400	403.50
Consisting of: · Crometta Overhead shower 160 1jet (# 26577XXX) · Crometta 100 Hand shower Vario (# 26824400) · Isiflex Shower hose 160 cm (# 28276XXX)			
Water saving EcoSmart version: · Crometta Showerpipe 160 1jet EcoSmart 9 l/min with thermostat	White/Chrome	27265400	403.50
Optional parts: · Wall bar spacer for Croma 100 Showerpipe	Chrome	95239000	10.10

Measurements within scale drawings are in mm.

Showerpipes and shower panels

	finish	code no.	Euro
Crometta Showerpipe 160 1jet with single lever mixer · consists of: overhead shower, hand shower, single lever shower mixer, shower hose, slider · slide inclination angle can be adjusted by 45° · adjustable hot water limitation · overhead shower Crometta 160 · shower head size: 160 mm · ball-joint: overhead shower angle adjustable · spray type: Rain · flow rate Rain spray (at 0.3 MPa): 16 l/min · operating pressure: min. 0.1 MPa/max. 1.0 MPa · shower arm length: 350 mm · height-adjustable hand shower holder · installation type: exposed installation · connection dimension DN15 · connection thread G ½ · centre distance 150 ± 12 mm · ceramic cartridge · temperature limitation adjustable	White/Chrome	27266400	380.40
Consisting of: · Crometta Overhead shower 160 1jet (# 26577XXX) · Crometta 100 Hand shower Vario (# 26824400) · Isiflex Shower hose 160 cm (# 28276XXX)			
Optional parts: · Wall bar spacer for Croma 100 Showerpipe	Chrome	95239000	10.10

Raindance shower panels

Raindance Shower panel Lift 180 2jet for exposed installation · consists of: shower panel, overhead shower, baton hand shower, shower hose, shower holder · overhead shower Raindance S 180 Air · shower head size: 180 mm · shower arm length: 420 mm · height adjustment: 200 mm · spray type (overhead shower): RainAir, wide flood jet · flow rate RainAir spray (at 0.3 MPa): 14 l/min · flow rate RainFlow spray (at 0.3 MPa): 17 l/min · scald protection at 40° · adjustable hot water limitation · isolated water conduction · centre distance: 150 ± 12 mm · connection thread G ½ · site: wall · installation type: exposed installation · suitable for continuous flow water heaters · connection dimension: DN15	Satin Chrome White/Chrome	27008000 27008400	2,449.90 2,449.90
Consisting of: · PuraVida Baton hand shower 120 1jet (# 28558XXX) · Shower holder Porter S (# 28331XXX) · Isiflex Shower hose 160 cm (# 28276XXX)			
Optional parts: · Raindance Corner fitting set for shower panel Lift 180 2jet for exposed installation		27999000	200.90

Measurements within scale drawings are in mm.

Technical specifications and units of measure are subject to change.

Thermostatic mixers / valves



Thermostatic mixers and combis for exposed installation page 210



Thermostatic mixers for concealed installation page 222



Selected exposed thermostatic mixers at a glance

		Ecostat®			Ecostat® E
					NEW 
		Ecostat® Bath thermostat 1001 CL	Ecostat® Bath thermostat Universal	Ecostat® Bath thermostat Comfort	Ecostat® E Bath thermostat
Versions	Standard	13201, -000	13123, -000	13114, -000, -140, -340, -670, -700, -990	15774, -000
	Bath filler flow rate (l/min in the standard version)	20 l/min	20 l/min	23 l/min	18.6 l/min
Features	Scald protection at 40°C	■	■	■	■
	Adjustable temperature limit	■	■	■	■
	EcoStop button				■
	Consumer control	Turn	Turn	Turn	Turn
	Shelf				
	Concealed connection for an additional user				
Uniques	Select				
	CoolContact				■
					NEW 
		Ecostat® Shower thermostat 1001 CL	Ecostat® Shower thermostat Universal	Ecostat® Shower thermostat Comfort	Ecostat® E Shower thermostat
Versions	Standard	13211, -000	13122, -000	13116, -000, -140, -340, -670, -700, -990	15773, -000
Features	Scald protection at 40°C	■	■	■	■
	Adjustable temperature limit	■	■	■	■
	EcoStop button	■	■	■	■
	Consumer control	Turn	Turn	Turn	Turn
	Shelf				
	Concealed connection for an additional user				
Uniques	Select				
	CoolContact				■

■ Available

Ecostat® Select	ShowerTablet® Select	
		
Ecostat Select® Bath thermostat	ShowerTablet® Select Bath thermostat 300	ShowerTablet® Select Bath thermostat 700
13141, -000, -400	13151, -000, -400	13183, -000, -400
20 l/min	20 l/min	20 l/min
■	■	■
■	■	■
Turn	Select	Select
■	■	■
	■	■
■	■	■
		
Ecostat Select® Shower thermostat	ShowerTablet® Select Shower thermostat 300	ShowerTablet® Select Thermostat 700 Universal
13161, -000, -400	13171, -000, -400	13184, -000, -400
■	■	■
■	■	■
■	■	
Turn	Select	Select
■	■	■
		■
	■	■
■	■	■

Price

All specified flow rates are based on an operating pressure of **0.3** MPa (3 bar).

Selected concealed pre-fab sets at a glance

		Ecostat® S	Ecostat® E	Ecostat® Square	ShowerSelect® S
					
Versions	Surface glass				
	Variants incl. shower support				
Thermostat	Thermostat solution for 1 function	15757, -000	15707, -000	15712, -000	15744, -000
	Thermostat solution for 2 functions	15758, -000, -140, -340, -670, -700, -990	15708, -000	15714, -000, -140, -340, -670, -700, -990	15743, -000, -140, -340, -670, -700, -990
	Thermostat solution for 3 functions				15745, -000 + 15741, -000
	Thermostat solution for 4 functions				15745, -000 + 15742, -000
	Thermostat solution for 5 functions				
Mixer	Mixer solution for 1 function				15747, -000
	Mixer solution for 2 functions				15748, -000
Features	Scald protection at 40°C	■	■	■	■
	Adjustable temperature limit	■	■	■	■
	Consumer control	Turn	Turn	Turn	Select
	Based on iBox universal	■	■	■	■

■ Available

ShowerSelect®	ShowerSelect® Glas	RainSelect®		PuraVida®
			NEW 	
	■	■		
■		■		
15762, -000	15737, -400, -600			
15763, -000, -140, -340, -670, -700, -990	15738, -400, -600	15355, -000, -400, -600	15380, -000, -140, -340, -670, -700, -990	15771, -000, -400
15764, -000 + 15760, -000	15736, -400, -600 + 15734, -400, -600	15356, -000, -400, -600	15381, -000, -700	15777, -000, -400
15764, -000 + 15761, -000	15736, -400, -600 + 15735, -400, -600	15357, -000, -400, -600	15382, -000, -140, -340, -670, -700, -990	
		15358, -000, -400, -600	15384, -000, -700	
15767, -000				
15768, -000				
■	■	■	■	■
■	■	■	■	■
Select	Select	Select	Select	Turn
■	■			■

Price

All specified flow rates are based on an operating pressure of **0.3** MPa (3 bar).

Concealed installation overview of functions





1 function



ShowerSelect® Thermostat



ShowerSelect®
Thermostat
#15762, -000
Glass surface
#15737, -400, -600

ShowerSelect® Mixer



ShowerSelect®
Mixer
#15767, -000

Ecostat® Thermostat



Ecostat®
Thermostat
for 1 function
#15712, -000



Ecostat® E
Thermostat
#15707, -000

ShowerSelect® Thermostat



ShowerSelect® S
Thermostat
#15744, -000

ShowerSelect® Mixer



ShowerSelect® S
Mixer
#15747, -000

Ecostat® Thermostat



Ecostat® S
Thermostat
#15757, -000

You will be able to satisfy any of your customers' requirements – and help them keep to their budgets – with hansgrohe's complete concealed range for between one and four functions. The choice starts with the operation: are the showers and spray types to be controlled conventionally by turning, or with complete ease at the touch of a button? Your customers also have complete freedom of design: the ShowerSelect is now also available in a round design and as a mixer. Ecostat thermostats are available as a circle, and now also as a square with rounded corners. Plenty of options for attractive installations that blend beautifully with the bathroom.



2 functions



ShowerSelect® Thermostat



ShowerSelect®
Thermostat
#15763, -000
Glass surface
#15738, -400, -600



ShowerSelect®
Thermostat
with Fixfit and Porter
#15765, -000

ShowerSelect® Mixer



ShowerSelect®
Mixer
#15768, -000

Ecostat® Thermostat



Ecostat®
Thermostat
for 2 functions
#15714, -000



Ecostat® E
Thermostat
#15708, -000

ShowerSelect® Thermostat



ShowerSelect® S
Thermostat
#15743, -000

ShowerSelect® Mixer



ShowerSelect® S
Mixer
#15748, -000

Ecostat® Thermostat



Ecostat® S
Thermostat
#15758, -000



3 FUNCTIONS



ShowerSelect®



ShowerSelect®
Valve
15764, -000



ShowerSelect®
Thermostat highflow
15760, -000

Ecostat® Thermostatic mixer



iControl® E
Valve
15777, -000



Ecostat® E
Thermostatic mixer highflow
15706, -000
Thermostatic mixer
15705, -000 (o. Abb.)

ShowerSelect®



ShowerSelect® S
Valve
15745, -000



ShowerSelect® S
Thermostatic mixer highflow
15741, -000

Ecostat® Thermostat mixer



Trio®/Quattro® S
Shut-off/ diverter valve
15932, -000



Ecostat® S
Thermostatic mixer highflow
15756, -000
Thermostatic mixer
15755, -000 (not shown)



Shut-off valve S
15972, -000



4 FUNCTIONS



ShowerSelect®



ShowerSelect®
Valve
15764, -000



ShowerSelect®
Thermostatic mixer highflow
15761, -000

Ecostat® Thermostatic mixer



iControl® E
Valve
15777, -000



Ecostat® E
Thermostatic mixer highflow
15706, -000



Absperrventil E
15978, -000

ShowerSelect®



ShowerSelect® S
Valve
15745, -000



ShowerSelect® S
Thermostatic mixer highflow
15742, -000

Ecostat® Thermostatic mixer



Trio®/Quattro® S
Shut-off/ diverter valve
15932, -000



Shut-off valve S
15972, -000



Ecostat® S
Thermostatic mixer highflow
15756, -000



Shut-off valve S
15972, -000

Thermostatic mixers and combis for exposed installation

	finish	code no.	Euro
ShowerTablet Select Thermostat 700 universal for exposed installation for 2 functions	Chrome	13184000	1,130.90
	White/Chrome	13184400	1,130.90



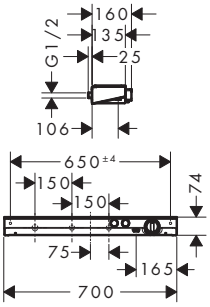

- 2 outlets
- simultaneous utilization by 2 outlets
- centre distance: 150 mm
- CoolContact thermostat: Prevents the housing from heating up, making showering even safer
- maximum flow rate at 0.3 MPa: 28 l/ min
- flow rate hand shower connection at 0.3 MPa: 14 l/ min
- flow rate upper outlet: 28 l/ min
- Select valve, thermostat cartridge
- min. operating pressure: 1 bar
- max. operating pressure: 10 bar
- safety lock at 40° C
- temperature limitation adjustable
- with isolated water conduction
- non-return valve
- with silencer
- shelf made of safety glass
- surface of the shelf at color variant -000 = mirror glass, at color variant -400 = white glass
- control of an external shower or bath tub filler via concealed connection G ½ possible
- connection type: G ½
- connection dimension: DN15
- dirt filter included
- Thermostat is delivered with buttons Rain large and hand shower

Optional parts:

· Rainmaker Select Overhead shower 460 1jet with ceiling connector	White/Chrome	24002400	1,470.30
	Black/Chrome	24002600	1,470.30
· Rainmaker Select Overhead shower 460 1jet with shower arm	White/Chrome	24003400	1,583.30
	Black/Chrome	24003600	1,583.30

ShowerTablet Select Bath thermostat 700 for exposed installation	Chrome	13183000	1,357.10
	White/Chrome	13183400	1,357.10



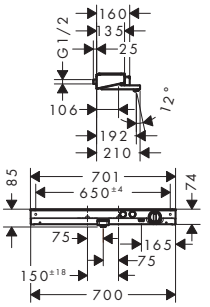

- projection 192 mm
- 2 outlets
- simultaneous utilization by 2 outlets
- centre distance: 150 ± 18 mm
- flow rate for bath spout at 3 bar: 20 l/ min
- flow rate of hand shower at 3 bar: 15 l/ min
- Select valve, thermostat cartridge
- min. operating pressure: 1 bar
- max. operating pressure: 10 bar
- safety lock at 40° C
- temperature limitation adjustable
- with isolated water conduction
- non-return valve
- with silencer
- shelf made of safety glass
- surface of the shelf at color variant -000 = mirror glass, at color variant -400 = white glass
- connection type: G ½
- connection dimension: DN15
- dirt filter included

Measurements within scale drawings are in mm.

Technical specifications and units of measure are subject to change.

	finish	code no.	Euro



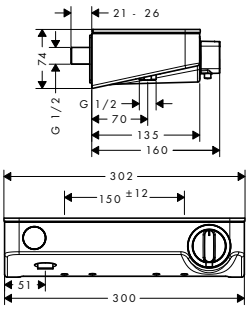

ShowerTablet Select Shower thermostat 300 for exposed installation

- 1 outlet
- centre distance: 150 ± 12 mm
- CoolContact thermostat: Prevents the housing from heating up, making showering even safer
- maximum flow rate at 0.3 MPa: 14 l/ min
- flow rate hand shower connection at 0.3 MPa: 14 l/ min
- thermostat cartridge, Select valve
- min. operating pressure: 1 bar
- max. operating pressure: 10 bar
- safety lock at 40° C
- temperature limitation adjustable
- with isolated water conduction
- non-return valve
- with silencer
- material handles: metal
- shelf made of safety glass
- surface of the shelf at color variant -000 = mirror glass, at color variant -400 = white glass
- in case of installation on existing G ¾ connections, adaptor # 02026000 must be used
- connection type: G ½
- connection dimension: DN15
- dirt filter included
- Thermostat is delivered with button hand shower

Chrome	13171000	450.80
White/Chrome	13171400	450.80

Consisting of:
- S-Union Set (# 95772000)

Optional parts:

· S-connections adapter G ¾ for renovation	Chrome	02026000	29.70



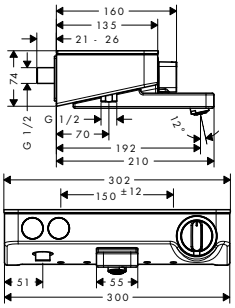

ShowerTablet Select Bath thermostat 300 for exposed installation

- projection 192 mm
- 2 outlets
- simultaneous utilization by 2 outlets
- centre distance: 150 ± 12 mm
- flow rate for bath spout at 3 bar: 20 l/ min
- flow rate of hand shower at 3 bar: 16 l/ min
- thermostat cartridge, Select valve
- min. operating pressure: 1 bar
- max. operating pressure: 10 bar
- safety lock at 40° C
- temperature limitation adjustable
- with isolated water conduction
- non-return valve
- with silencer
- material handles: metal
- shelf made of safety glass
- surface of the shelf at color variant -000 = mirror glass, at color variant -400 = white glass
- in case of installation on existing G ¾ connections, adaptor # 02026000 must be used
- connection type: G ½
- connection dimension: DN15
- dirt filter included

Chrome	13151000	602.90
White/Chrome	13151400	602.90

Consisting of:
- S-Union Set (# 95772000)

Optional parts:

· S-connections adapter G ¾ for renovation	Chrome	02026000	29.70

Measurements within scale drawings are in mm.

Technical specifications and units of measure are subject to change.

	finish	code no.	Euro
S-connections adapter G ¾ for renovation · adapter for installation on existing s-unions G ½ x G ¾ · installation type: exposed installation · connection dimension G ¾	Chrome	02026000	29.70



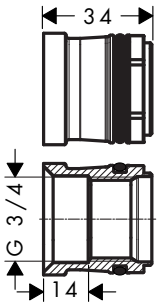



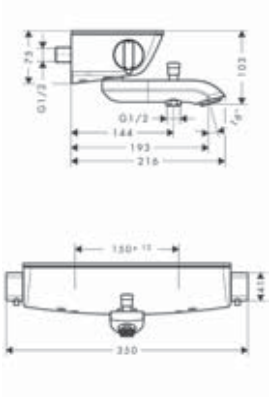

Ecostat Select Bath thermostat for exposed installation

Chrome	13141000	450.80
White/Chrome	13141400	450.80

Cool Contact · Air Power · Quick Clean

· projection 193 mm
· 2 outlets
· centre distance: 150 ± 12 mm
· flow rate for bath spout at 3 bar: 20 l/ min
· flow rate of hand shower at 3 bar: 12 l/ min
· thermostat cartridge, ceramic valve 180°
· min. operating pressure: 1 bar
· max. operating pressure: 10 bar
· safety lock at 40° C
· temperature limitation adjustable
· with isolated water conduction
· intrinsically safe against backflow
· with silencer
· material handles: metal
· shelf made of safety glass
· in case of installation on existing G ¾ connections, adaptor # 02026000 must be used
· surface of the shelf at color variant -000 = mirror glass, at color variant -400 = white glass
· connection type: s-shaped connections
· connection dimension: DN15
· dirt filter included

Consisting of:
· S-Union Set (# 95772000)

Optional parts:

· S-connections adapter G ¾ for renovation	Chrome	02026000	29.70

Measurements within scale drawings are in mm.

Technical specifications and units of measure are subject to change.

	finish	code no.	Euro
Ecostat Select Shower thermostat for exposed installation	Chrome	13161000	347.20
	White/Chrome	13161400	347.20



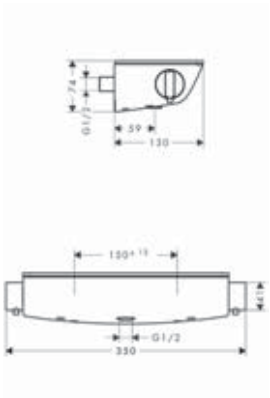

- 1 outlet
- centre distance: 150 ± 12 mm
- CoolContact thermostat: Prevents the housing from heating up, making showering even safer
- EcoStop button limits the water consumption to 10 l/ min
- maximum flow rate at 0.3 MPa: 12 l/ min
- flow rate hand shower connection at 0.3 MPa: 12 l/ min
- thermostat cartridge, ceramic valve 180°
- min. operating pressure: 1 bar
- max. operating pressure: 10 bar
- safety lock at 40° C
- temperature limitation adjustable
- with isolated water conduction
- non-return valve
- with silencer
- shelf made of safety glass
- in case of installation on existing G ¾ connections, adaptor # 02026000 must be used
- surface of the shelf at color variant -000 = mirror glass, at color variant -400 = white glass
- connection type: s-shaped connections
- connection dimension: DN15
- dirt filter included

Consisting of:
- S-Union Set (# 95772000)

Optional parts:

· S-connections adapter G ¾ for renovation	Chrome	02026000	29.70

Ecostat Select Shower thermostat for exposed installation renovation	Chrome	13111000	347.20
	White/Chrome	13111400	347.20



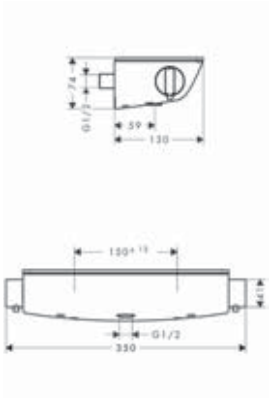

- 1 outlet
- centre distance: 150 ± 12 mm
- EcoStop button limits the water consumption to 10 l/ min
- flow rate hand shower connection at 0.3 MPa: 14 l/ min
- thermostat cartridge, ceramic valve 180°
- min. operating pressure: 1 bar
- max. operating pressure: 10 bar
- safety lock at 40° C
- temperature limitation adjustable
- with isolated water conduction
- non-return valve
- with silencer
- material handles: metal
- shelf made of safety glass
- surface of the shelf at color variant -000 = mirror glass, at color variant -400 = white glass
- for installation on existing G ½ connections
- connection type: s-shaped connections
- connection dimension: DN15
- dirt filter included

Consisting of:
- S-connections adapter G ¾ for renovation (# 02026000)
- S-Union Set (# 95772000)

Measurements within scale drawings are in mm.

Technical specifications and units of measure are subject to change.



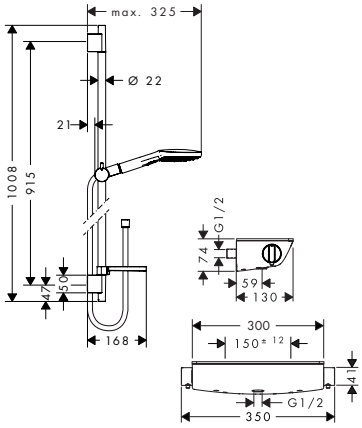

	finish	code no.	Euro
Raindance Select E Shower system for exposed installation 120 with Ecostat Select thermostat and shower bar 90 cm · consists of: hand shower, shower thermostat, shower bar, slider, soap dish, shower hose · spray type: Rain, RainAir, Whirl · convenient diversion via Select button · pivot connectors prevent hose from tangling · 90° position adjustable slider, pivots left and right, up and down · maximum flow rate at 0.3 MPa: 15 l/ min · in case of installation on existing G ¾ connections, adaptor # 02026000 must be used	Chrome White/Chrome	27039000 27039400	469.60 469.60
Consisting of: · Ecostat Select Shower thermostat for exposed installation (# 13161XXX) · Raindance Select E Shower set 120 3jet with shower bar 90 cm and soap dish (# 26621XXX)			
Alternative sizes: · Raindance Select E Shower system for exposed installation 120 with Ecostat Select thermostat and shower bar 65 cm	Chrome White/Chrome	27038000 27038400	462.40 462.40
Optional parts: · S-connections adapter G ¾ for renovation	Chrome	02026000	29.70



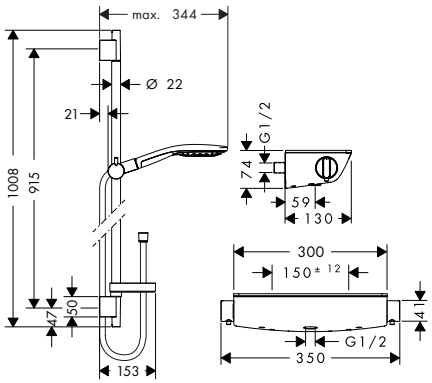

	finish	code no.	Euro
Raindance Select S Shower system for exposed installation 150 with Ecostat Select thermostat and shower bar 90 cm · consists of: hand shower, shower thermostat, shower bar, slider, soap dish, shower hose · spray type: RainAir, CaresseAir, Mix · convenient diversion via Select button · pivot connectors prevent hose from tangling · 90° position adjustable slider, pivots left and right, up and down · maximum flow rate at 0.3 MPa: 16 l/ min · in case of installation on existing G ¾ connections, adaptor # 02026000 must be used	Chrome White/Chrome	27037000 27037400	515.80 515.80
Consisting of: · Ecostat Select Shower thermostat for exposed installation (# 13161XXX) · Raindance Select S Shower set 150 3jet with shower bar 90 cm and soap dish (# 27803XXX)			
Alternative sizes: · Raindance Select S Shower system for exposed installation 150 with Ecostat Select thermostat and shower bar 65 cm	Chrome White/Chrome	27036000 27036400	508.50 508.50
Optional parts: · S-connections adapter G ¾ for renovation	Chrome	02026000	29.70

Measurements within scale drawings are in mm.

Technical specifications and units of measure are subject to change.

	finish	code no.	Euro

NEW



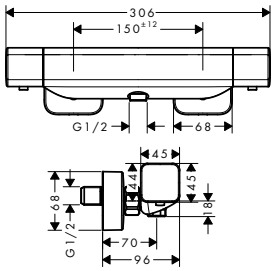

Ecostat E Shower thermostat for exposed installation

Chrome 15773000 270.00

Cool Contact

- 1 outlet
- centre distance: 150 ± 12 mm
- CoolContact thermostat: Prevents the housing from heating up, making showering even safer
- EcoStop button limits the water consumption to 9 l/ min
- maximum flow rate at 0.3 MPa: 28.6 l/ min
- thermostat cartridge
- safety lock at 40° C
- temperature limitation adjustable
- non-return valve
- with silencer
- suitable for continous flow water heaters
- material handles: metal
- connection type: s-shaped connections
- connection dimension: G ½
- dirt filter included

NEW



reddot award 2019 winner

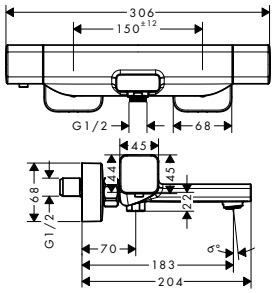

Ecostat E Bath thermostat for exposed installation

Chrome 15774000 330.00

Cool Contact

- 2 outlets
- centre distance: 150 ± 12 mm
- EcoStop button limits the water consumption to 9 l/ min
- flow rate for bath spout at 3 bar: 18.6 l/ min
- flow rate of hand shower at 3 bar: 15.4 l/ min
- thermostat cartridge
- safety lock at 40° C
- temperature limitation adjustable
- non-return valve
- with silencer
- material handles: metal
- connection type: s-shaped connections
- connection dimension: G ½
- dirt filter included



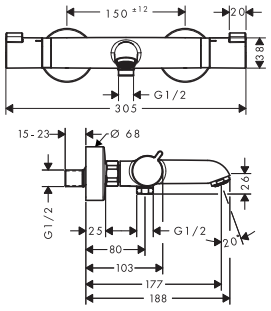

Ecostat Bath thermostat Comfort for exposed installation

	Chrome	13114000	295.20
NEW	Brushed Bronze	13114140	442.40
NEW	Brushed Black Chrome	13114340	442.40
NEW	Matt Black	13114670	413.70
NEW	Matt White	13114700	413.70
NEW	Polished Gold Optic	13114990	442.40

Air Power

Quick Clean

- projection 177 mm
- 2 outlets
- centre distance: 150 ± 12 mm
- flow rate for bath spout at 3 bar: 20 l/ min
- flow rate of hand shower at 3 bar: 15 l/ min
- thermostat cartridge, shut-off/ diverter valve
- min. operating pressure: 1 bar
- max. operating pressure: 10 bar
- safety lock at 40° C
- temperature limitation adjustable
- non-return valve
- with silencer
- material handles: metal
- connection type: s-shaped connections
- connection dimension: DN15
- dirt filter included

Measurements within scale drawings are in mm.

Technical specifications and units of measure are subject to change.



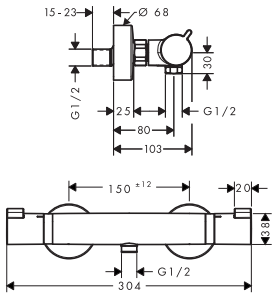

Ecostat Shower thermostat Comfort for exposed installation

- 1 outlet
- centre distance: 150 ± 12 mm
- EcoStop button limits the water consumption to 10 l/ min
- maximum flow rate at 0.3 MPa: 17 l/ min
- flow rate hand shower connection at 0.3 MPa: 17 l/ min
- thermostat cartridge, ceramic valve 180°
- min. operating pressure: 1 bar
- max. operating pressure: 10 bar
- safety lock at 40° C
- temperature limitation adjustable
- non-return valve
- with silencer
- material handles: metal
- connection type: s-shaped connections
- connection dimension: DN15
- dirt filter included

	finish	code no.	Euro
	Chrome	13116000	231.10
NEW	Brushed Bronze	13116140	347.10
NEW	Brushed Black Chrome	13116340	347.10
NEW	Matt Black	13116670	323.60
NEW	Matt White	13116700	323.60
NEW	Polished Gold Optic	13116990	347.10



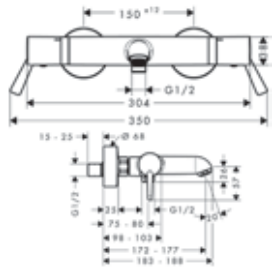

Ecostat Bath thermostat Comfort Care for exposed installation with extra long handles

- larger print for greater clarity
- with extra long barrier-free handles
- projection 172 - 177 mm
- 2 outlets
- centre distance: 150 ± 12 mm
- flow rate for bath spout at 3 bar: 23 l/ min
- flow rate of hand shower at 3 bar: 15 l/ min
- thermostat cartridge, shut-off/ diverter valve
- min. operating pressure: 1 bar
- max. operating pressure: 10 bar
- safety lock at 40° C
- temperature limitation adjustable
- non-return valve
- with silencer
- material handles: metal
- connection type: s-shaped connections
- connection dimension: DN15
- dirt filter included

Chrome 13115000 318.50

Quick Clean



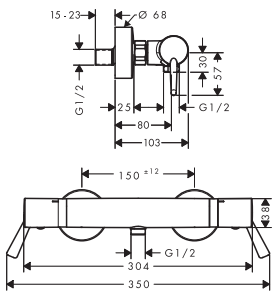

Ecostat Shower thermostat Comfort Care for exposed installation with extra long handles

- larger print for greater clarity
- with extra long barrier-free handles
- 1 outlet
- centre distance: 150 ± 12 mm
- flow rate hand shower connection at 0.3 MPa: 17 l/ min
- thermostat cartridge, ceramic valve 180°
- min. operating pressure: 1 bar
- max. operating pressure: 10 bar
- safety lock at 40° C
- temperature limitation adjustable
- non-return valve
- with silencer
- material handles: metal
- connection type: s-shaped connections
- connection dimension: DN15
- dirt filter included

Chrome 13117000 254.30

Measurements within scale drawings are in mm.

Technical specifications and units of measure are subject to change.

	finish	code no.	Euro

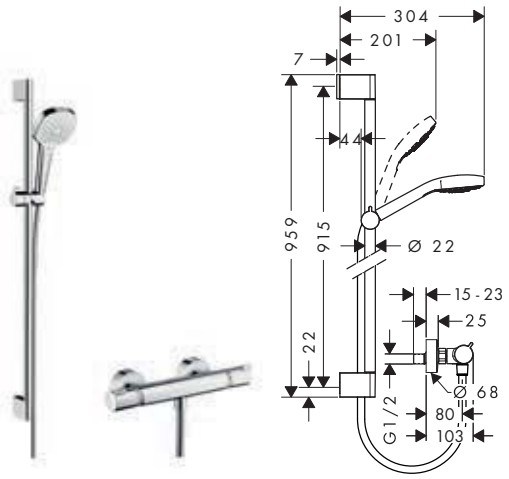

Croma Select E Shower system for exposed installation Vario with Ecostat Comfort thermostat and shower bar 90 cm

- consists of: hand shower, shower thermostat, shower bar, slider, shower hose
- spray type: Rain, TurboRain, IntenseRain
- convenient diversion via Select button
- pivot connectors prevent hose from tangling
- slide inclination angle can be adjusted by 45°
- maximum flow rate at 0.3 MPa: 15 l/ min

Consisting of:

- Croma Select E Shower set Vario with shower bar 90 cm (# 26592400)
- Ecostat Shower thermostat Comfort for exposed installation (# 13116XXX)

White/Chrome	27082400	272.40

Alternative sizes:

- Croma Select E Shower system for exposed installation Vario with Ecostat Comfort thermostat and shower bar 65 cm

White/Chrome	27081400	266.70

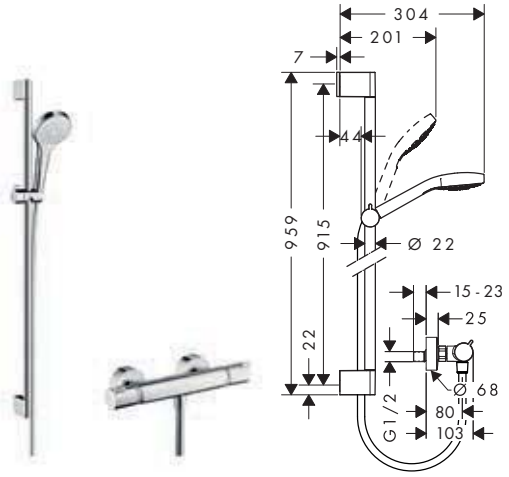

Croma Select S Shower system for exposed installation Vario with Ecostat Comfort thermostat and shower bar 90 cm

- consists of: hand shower, shower thermostat, shower bar, slider, shower hose
- spray type: Rain, TurboRain, IntenseRain
- convenient diversion via Select button
- pivot connectors prevent hose from tangling
- slide inclination angle can be adjusted by 45°
- maximum flow rate at 0.3 MPa: 15 l/ min

Consisting of:

- Croma Select S Shower set Vario with shower bar 90 cm (# 26572400)
- Ecostat Shower thermostat Comfort for exposed installation (# 13116XXX)

White/Chrome	27014400	272.40

Alternative sizes:

- Croma Select S Shower system for exposed installation Vario with Ecostat Comfort thermostat and shower bar 65 cm

White/Chrome	27013400	266.70

Measurements within scale drawings are in mm.

	finish	code no.	Euro
Croma 100 Shower system for exposed installation Vario with Ecostat Comfort thermostat and shower bar 90 cm · consists of: hand shower, shower thermostat, shower bar, slider, soap dish, shower hose · spray type: normal spray, Rain, Massage spray, Shampoo spray · spray type adjustment by turning spray disc · pivot connectors prevent hose from tangling · 90° position adjustable slider, pivots left and right, up and down · maximum flow rate at 0.3 MPa: 18 l/ min	Chrome	27035000	308.40
Consisting of: · Croma 100 Shower set Vario with shower bar 90 cm and soap dish (# 27771000) · Ecostat Shower thermostat Comfort for exposed installation (# 13116XXX)			
Alternative sizes: · Croma 100 Shower system for exposed installation Vario with Ecostat Comfort thermostat and shower bar 65 cm	Chrome	27034000	301.80
Water saving EcoSmart version: · Croma 100 Shower system for exposed installation Vario EcoSmart 9 l/ min with Ecostat Comfort thermostat and shower bar 90 cm	Chrome	27033000	313.70
Optional parts: · Wall bar spacer	Chrome	97450000	8.00



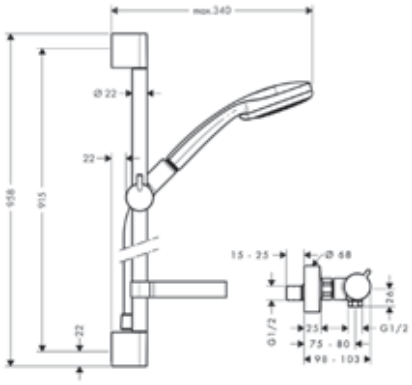

	finish	code no.	Euro
Croma 100 Shower system for exposed installation Vario with Ecostat Comfort thermostat and shower bar 65 cm · consists of: hand shower, shower thermostat, shower bar, slider, soap dish, shower hose · spray type: normal spray, Rain, Massage spray, Shampoo spray · spray type adjustment by turning spray disc · pivot connectors prevent hose from tangling · 90° position adjustable slider, pivots left and right, up and down · maximum flow rate at 0.3 MPa: 18 l/ min	Chrome	27034000	301.80
Consisting of: · Croma 100 Shower set Vario with shower bar 65 cm and soap dish (# 27772000) · Ecostat Shower thermostat Comfort for exposed installation (# 13116XXX)			
Water saving EcoSmart version: · Croma 100 Shower system for exposed installation Vario EcoSmart 9 l/ min with Ecostat Comfort thermostat and shower bar 65 cm	Chrome	27032000	307.10



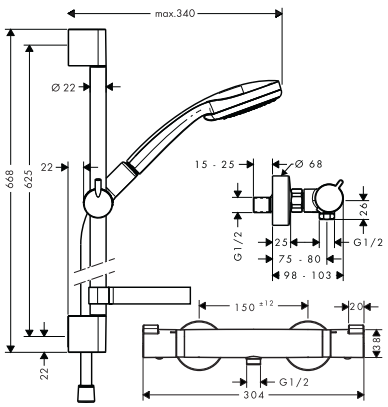

Measurements within scale drawings are in mm.

Technical specifications and units of measure are subject to change.

	finish	code no.	Euro



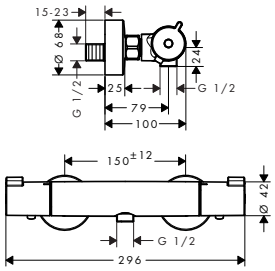

Ecostat Shower thermostat 1001 CL for exposed installation
- 1 outlet
- centre distance: 150 ± 12 mm
- EcoStop button limits the water consumption to 10 l/ min
- maximum flow rate at 0.3 MPa: 17 l/ min
- flow rate hand shower connection at 0.3 MPa: 17 l/ min
- thermostat cartridge, ceramic valve 180°
- min. operating pressure: 1 bar
- max. operating pressure: 10 bar
- safety lock at 40° C
- temperature limitation adjustable
- non-return valve
- with silencer
- material handles: metal
- connection type: s-shaped connections
- connection dimension: DN15
- dirt filter included

Chrome | 13211000 | 162.10



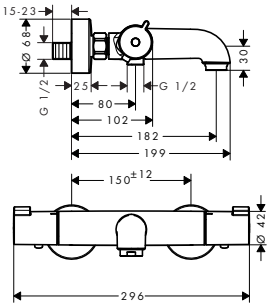

Ecostat Bath thermostat 1001 CL for exposed installation
- projection 182 mm
- 2 outlets
- centre distance: 150 ± 12 mm
- spray type mixer: normal spray
- flow rate for bath spout at 3 bar: 20 l/ min
- flow rate of hand shower at 3 bar: 17 l/ min
- thermostat cartridge, shut-off valve
- min. operating pressure: 1 bar
- max. operating pressure: 10 bar
- safety lock at 40° C
- temperature limitation adjustable
- non-return valve
- with silencer
- material handles: metal
- connection type: s-shaped connections
- connection dimension: DN15
- dirt filter included

Chrome | 13201000 | 205.60

Air Power



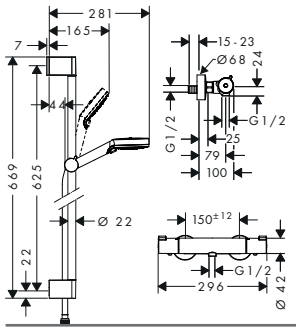

Crometta Shower system for exposed installation Vario with Ecostat 1001 CL thermostat and shower bar 65 cm
- consists of: hand shower, shower thermostat, shower bar, slider, shower hose
- spray type: Rain, IntenseRain
- spray type adjustment by turning spray disc
- pivot connectors prevent hose from tangling
- 90° position adjustable slider, pivots left and right, up and down
- maximum flow rate at 0.3 MPa: 14 l/ min

Consisting of:
- Crometta Shower set Vario with shower bar 65 cm (# 26532400)
- Ecostat Shower thermostat 1001 CL for exposed installation (# 13211000)

White/Chrome | 27812400 | 201.10

Quick Clean | XXL Performance

Alternative sizes:
- Crometta Shower system for exposed installation Vario with Ecostat 1001 CL thermostat and shower bar 90 cm

White/Chrome | 27813400 | 209.90

Measurements within scale drawings are in mm.

	finish	code no.	Euro



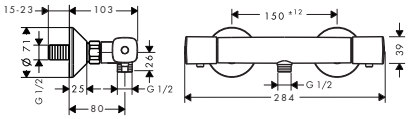

Ecostat Shower thermostat universal for exposed installation

Chrome | 13122000 | 207.50

- 1 outlet
- centre distance: 150 ± 12 mm
- EcoStop button limits the water consumption to 10 l/ min
- maximum flow rate at 0.3 MPa: 17 l/ min
- flow rate hand shower connection at 0.3 MPa: 17 l/ min
- thermostat cartridge, ceramic valve 180°
- min. operating pressure: 1 bar
- max. operating pressure: 10 bar
- safety lock at 40° C
- temperature limitation adjustable
- non-return valve
- with silencer
- connection type: s-shaped connections
- connection dimension: DN15
- dirt filter included



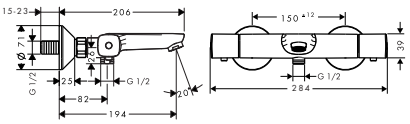

Ecostat Bath thermostat universal for exposed installation

Chrome | 13123000 | 265.10

Air Power | Quick Clean

- projection 194 mm
- 2 outlets
- centre distance: 150 ± 12 mm
- flow rate for bath spout at 3 bar: 20 l/ min
- flow rate of hand shower at 3 bar: 16 l/ min
- thermostat cartridge, shut-off/ diverter valve
- min. operating pressure: 1 bar
- max. operating pressure: 10 bar
- safety lock at 40° C
- temperature limitation adjustable
- non-return valve
- with silencer
- connection type: s-shaped connections
- connection dimension: DN15
- dirt filter included

Measurements within scale drawings are in mm.

Technical specifications and units of measure are subject to change.

	finish	code no.	Euro
Crometta 100 Shower system for exposed installation Vario with Ecostat universal thermostat and shower bar 90 cm · consists of: hand shower, shower thermostat, shower bar, slider, shower hose · spray type: Rain, normal spray, Shampoo spray, Massage spray · spray type adjustment by turning spray disc · pivot connectors prevent hose from tangling · 90° position adjustable slider, pivots left and right, up and down · maximum flow rate at 0.3 MPa: 16 l/min	White/Chrome	27031400	229.70
Consisting of: · Crometta 100 Shower set Vario with shower bar 90 cm (# 26657400) · Ecostat Shower thermostat universal for exposed installation (# 13122000)			
Alternative sizes: · Crometta 100 Shower system for exposed installation Vario with Ecostat universal thermostat and shower bar 65 cm	White/Chrome	27030400	224.00
Optional parts: · Wall bar spacer	Chrome	97450000	8.00
Croma 100 Shower system for exposed installation Multi with Ecostat Comfort thermostat and shower bar 90 cm · consists of: hand shower, shower thermostat, shower bar, slider, soap dish, shower hose · spray type: Rain, MonoRain, Massage spray · spray type adjustment by turning spray disc · pivot connectors prevent hose from tangling · 90° position adjustable slider, pivots left and right, up and down · maximum flow rate at 0.3 MPa: 17 l/min	Chrome	27085000	330.20
Consisting of: · Croma 100 Shower set Multi with shower bar 90 cm and soap dish (# 27774000) · Ecostat Shower thermostat Comfort for exposed installation (# 13116XXX)			
Alternative sizes: · Croma 100 Shower system for exposed installation Multi with Ecostat Comfort thermostat and shower bar 65 cm	Chrome	27086000	308.00
Optional parts: · Wall bar spacer	Chrome	97450000	8.00

Thermostatic mixers/ valves

	finish	code no.	Euro
Ecomax Shower thermostat for exposed installation · 1 outlet · centre distance: 150 ± 12 mm · maximum flow rate at 0.3 MPa: 24 l/ min · flow rate hand shower connection at 0.3 MPa: 24 l/ min · thermostat cartridge · temperature limitation adjustable · non-return valve · with silencer · connection type: G ¾ · connection dimension: DN15 · dirt filter included	Chrome	13356000	443.90

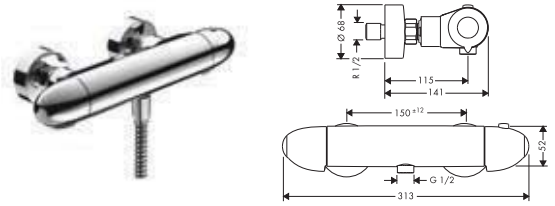

Thermostatic mixer for exposed installation

Ecostat Under-basin thermostat for exposed installation · the thermostat offers the possibility for thermal disinfection · connection dimension: G ⅜	Chrome	15346000	255.90

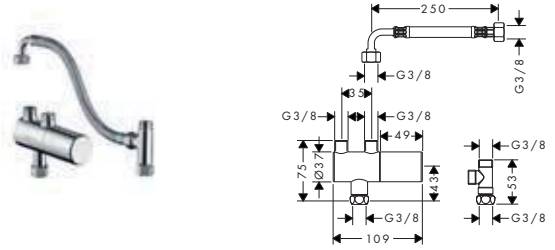

RainSelect thermostatic mixers for concealed installation

NEW

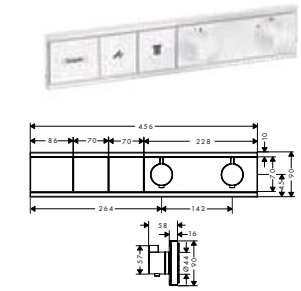

RainSelect Thermostat for concealed installation for 2 functions · depending on volume flow and installation situation approx. 50% flow rate reduction and integrated shut off function · 2 outlets · simultaneous use of several outlets · Select push-button on/off control for 2 outlets · maximum flow rate at 0.3 MPa: 26 l/ min · thermostat cartridge, Select valve · min. operating pressure: 1 bar · max. operating pressure: 10 bar · safety lock at 40° C · temperature limitation adjustable · non-return valve · connection type: basic set · Thermostat is delivered with buttons handshower and PowderRain	Chrome	15380000	1,065.00
	Brushed Bronze*	15380140	1,598.00
	Brushed Black Chrome*	15380340	1,598.00
	Matt Black*	15380670	1,384.50
	Matt White	15380700	1,384.50
	Polished Gold Optic*	15380990	1,598.00

Select

***available from April 2020**

Required parts:

· RainSelect Basic set for 2 functions		15310180	600.00

Measurements within scale drawings are in mm.

Technical specifications and units of measure are subject to change.

	finish	code no.	Euro
RainSelect Thermostat for concealed installation for 2 functions with integrated shower holder	Chrome	15355000	1,159.10
	White/Chrome	15355400	1,159.10
	Black/Chrome	15355600	1,159.10



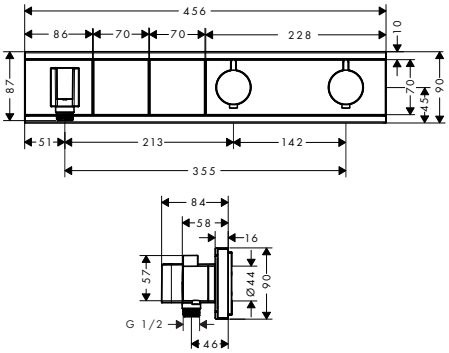

- consists of: Thermostat, shower holder
- depending on volume flow and installation situation approx. 50% flow rate reduction and integrated shut off function
- 2 outlets
- simultaneous use of several outlets
- Select push-button on/off control for 2 outlets
- maximum flow rate at 0.3 MPa: 26 l/ min
- thermostat cartridge, Select valve
- min. operating pressure: 1 bar
- max. operating pressure: 10 bar
- safety lock at 40° C
- temperature limitation adjustable
- non-return valve
- hose nut: for shower hoses with conical or cylindrical nut on both sides
- connection type: basic set
- Thermostat is delivered with buttons Rain large and hand shower

Required parts:

- RainSelect Basic set for 2 functions — 15310180 — 600.00



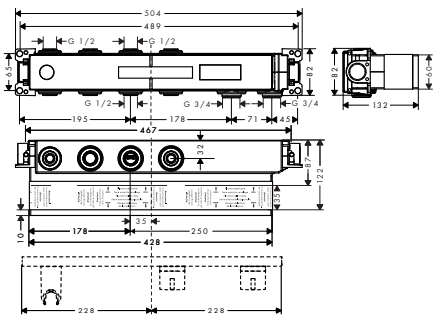

RainSelect Basic set for 2 functions — 15310180 — 600.00

- 2 outlets
- connection thread Rp ¾
- installation depth: 87 - 122 mm
- horizontal installation
- sound-decoupled installation
- connection dimension: DN15/DN20

NEW



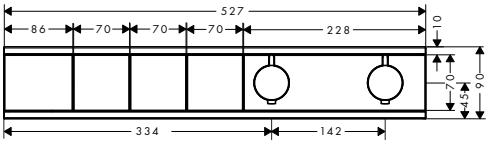

RainSelect Thermostat for concealed installation for 3 functions	Chrome	15381000	1,265.00
	Matt White	15381700	1,644.50

- depending on volume flow and installation situation approx. 50% flow rate reduction and integrated shut off function
- 3 outlets
- simultaneous use of several outlets
- Select push-button on/off control for 3 outlets
- thermostat cartridge, Select valve
- min. operating pressure: 1 bar
- max. operating pressure: 10 bar
- safety lock at 40° C
- temperature limitation adjustable
- non-return valve
- connection type: basic set
- Thermostat is delivered with buttons handshower, PowderRain, shoulder shower

Required parts:

- RainSelect Basic set for 3 functions — 15311180 — 700.00

Measurements within scale drawings are in mm.

Technical specifications and units of measure are subject to change.

	finish	code no.	Euro
RainSelect Thermostat for concealed installation for 3 functions with integrated shower holder	Chrome	15356000	1,369.80
	White/Chrome	15356400	1,369.80
	Black/Chrome	15356600	1,369.80



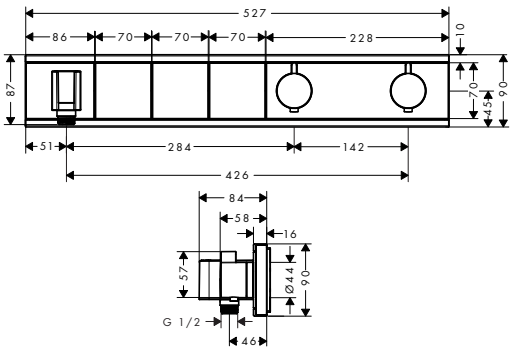

- consists of: Thermostat, shower holder
- depending on volume flow and installation situation approx. 50% flow rate reduction and integrated shut off function
- 3 outlets
- simultaneous use of several outlets
- Select push-button on/off control for 3 outlets
- maximum flow rate at 0.3 MPa: 26 l/ min
- thermostat cartridge, Select valve
- min. operating pressure: 1 bar
- max. operating pressure: 10 bar
- safety lock at 40° C
- temperature limitation adjustable
- non-return valve
- hose nut: for shower hoses with conical or cylindrical nut on both sides
- connection type: basic set
- Thermostat is delivered with buttons hand shower, Waterfall, Rain large

Required parts:

- RainSelect Basic set for 3 functions — 15311180 — 700.00

RainSelect Basic set for 3 functions — 15311180 — 700.00



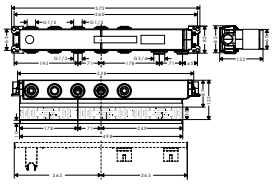

- 3 outlets
- connection thread Rp ¾
- installation depth: 87 - 122 mm
- horizontal installation
- sound-decoupled installation
- connection dimension: DN15/DN20

NEW

RainSelect Thermostat for concealed installation for 4 functions

	Chrome	15382000	1,465.00
	Brushed Bronze*	15382140	2,198.00
	Brushed Black Chrome*	15382340	2,198.00
	Matt Black*	15382670	1,904.50
	Matt White	15382700	1,904.50
	Polished Gold Optic*	15382990	2,198.00



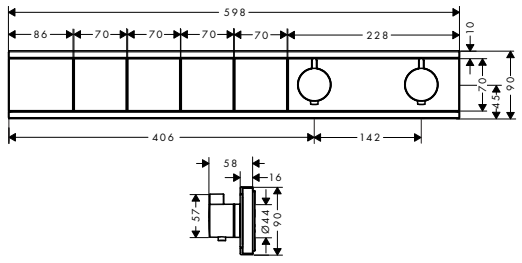

- depending on volume flow and installation situation approx. 50% flow rate reduction and integrated shut off function
- 4 outlets
- simultaneous use of several outlets
- Select push-button on/off control for 4 outlets
- thermostat cartridge, Select valve
- min. operating pressure: 1 bar
- max. operating pressure: 10 bar
- safety lock at 40° C
- temperature limitation adjustable
- non-return valve
- connection type: basic set
- Thermostat is delivered with buttons handshower, PowderRain, Waterfall, Rain large

***available from April 2020**

Required parts:

- RainSelect Basic set for 4 functions — 15312180 — 800.00

Measurements within scale drawings are in mm.

Technical specifications and units of measure are subject to change.

	finish	code no.	Euro
RainSelect Thermostat for concealed installation for 4 functions with integrated shower holder	Chrome	15357000	1,580.50
	White/Chrome	15357400	1,580.50
	Black/Chrome	15357600	1,580.50



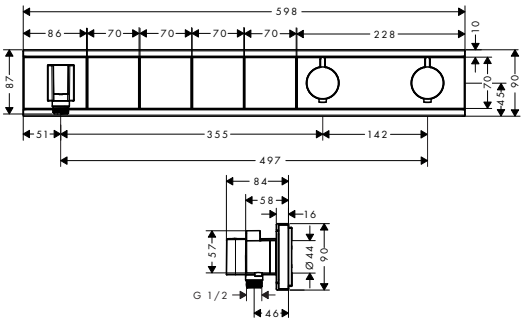

- consists of: Thermostat, shower holder
- depending on volume flow and installation situation approx. 50% flow rate reduction and integrated shut off function
- 4 outlets
- simultaneous use of several outlets
- Select push-button on/off control for 4 outlets
- maximum flow rate at 0.3 MPa: 26 l/ min
- thermostat cartridge, Select valve
- min. operating pressure: 1 bar
- max. operating pressure: 10 bar
- safety lock at 40° C
- temperature limitation adjustable
- non-return valve
- hose nut: for shower hoses with conical or cylindrical nut on both sides
- connection type: basic set
- Thermostat is delivered with buttons hand shower, Waterfall, Rain large, Mono

Required parts:

- RainSelect Basic set for 4 functions — 15312180 — 800.00

RainSelect Basic set for 4 functions — 15312180 — 800.00

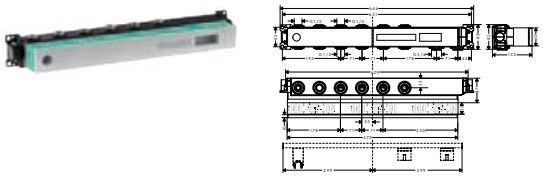

- 4 outlets
- connection thread Rp ¾
- installation depth: 87 - 122 mm
- horizontal installation
- sound-decoupled installation
- connection dimension: DN15/DN20

NEW



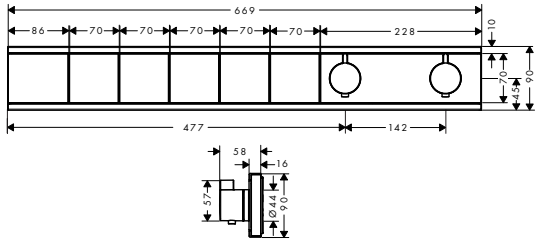

RainSelect Thermostat for concealed installation for 5 functions

	finish	code no.	Euro
	Chrome	15384000	1,665.00
	Matt White	15384700	2,164.50

- depending on volume flow and installation situation approx. 50% flow rate reduction and integrated shut off function
- 5 outlets
- simultaneous use of several outlets
- Select push-button on/off control for 5 outlets
- thermostat cartridge, Select valve
- min. operating pressure: 1 bar
- max. operating pressure: 10 bar
- safety lock at 40° C
- temperature limitation adjustable
- non-return valve
- connection type: basic set
- Thermostat is delivered with buttons handshower, PowderRain, Waterfall, Rain large, shoulder shower

Required parts:

- RainSelect Basic set for 5 functions — 15313180 — 900.00

Measurements within scale drawings are in mm.

	finish	code no.	Euro
RainSelect Thermostat for concealed installation for 5 functions with integrated shower holder	Chrome	15358000	1,791.30
	White/Chrome	15358400	1,791.30
	Black/Chrome	15358600	1,791.30

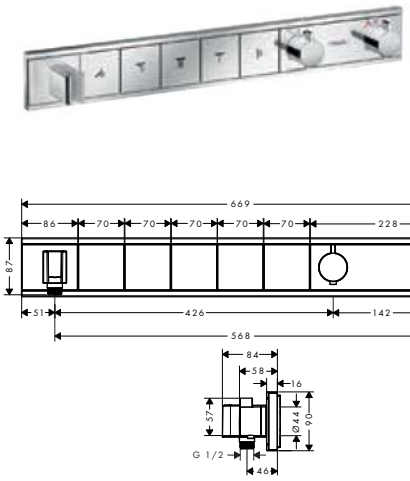

- consists of: Thermostat, shower holder
- depending on volume flow and installation situation approx. 50% flow rate reduction and integrated shut off function
- 5 outlets
- simultaneous use of several outlets
- Select push-button on/off control for 5 outlets
- maximum flow rate at 0.3 MPa: 26 l/ min
- thermostat cartridge, Select valve
- min. operating pressure: 1 bar
- max. operating pressure: 10 bar
- safety lock at 40° C
- temperature limitation adjustable
- non-return valve
- hose nut: for shower hoses with conical or cylindrical nut on both sides
- connection type: basic set
- Thermostat is delivered with buttons hand shower, Waterfall, Rain large, Mono, body shower

Required parts:

- RainSelect Basic set for 5 functions — 15313180 — 900.00

RainSelect Basic set for 5 functions — 15313180 — 900.00

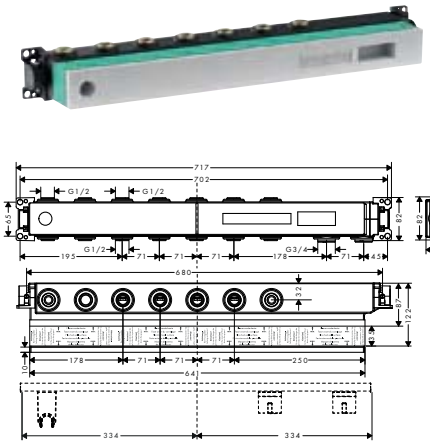

- 5 outlets
- connection thread Rp ¾
- installation depth: 87 - 122 mm
- horizontal installation
- sound-decoupled installation
- connection dimension: DN15/DN20

RainSelect Thermostat for concealed installation for 2 functions bath tub	Chrome	15359000	1,369.80
	White/Chrome	15359400	1,369.80
	Black/Chrome	15359600	1,369.80

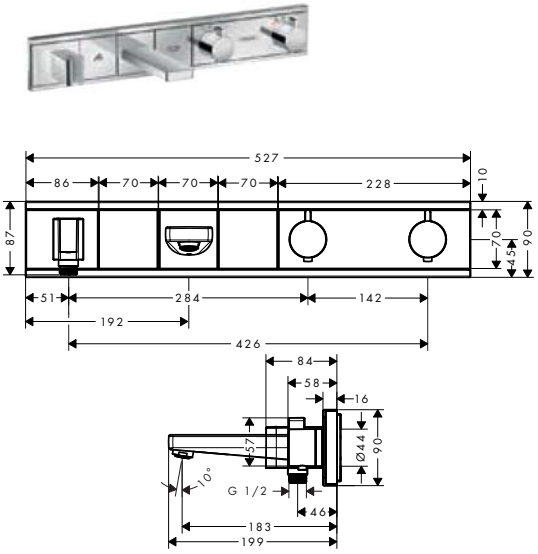

- consists of: Thermostat, shower holder
- depending on volume flow and installation situation approx. 50% flow rate reduction and integrated shut off function
- 2 outlets
- simultaneous use of several outlets
- Select push-button on/off control for 2 outlets
- thermostat cartridge, Select valve
- min. operating pressure: 1 bar
- max. operating pressure: 10 bar
- safety lock at 40° C
- temperature limitation adjustable
- non-return valve
- hose nut: for shower hoses with conical or cylindrical nut on both sides
- connection type: basic set
- Thermostat is delivered with buttons hand shower and bath tub

Required parts:

- RainSelect Basic set for 2 functions bath tub — 15314180 — 800.00

Measurements within scale drawings are in mm.

Technical specifications and units of measure are subject to change.

	finish	code no.	Euro
RainSelect Basic set for 2 functions bath tub · connection thread Rp ¾ · suitable for all shower, bath tub and thermostat finish sets for concealed installation · installation depth: 87 - 122 mm · sound-decoupled installation · connection dimension: DN15/DN20		15314180	800.00



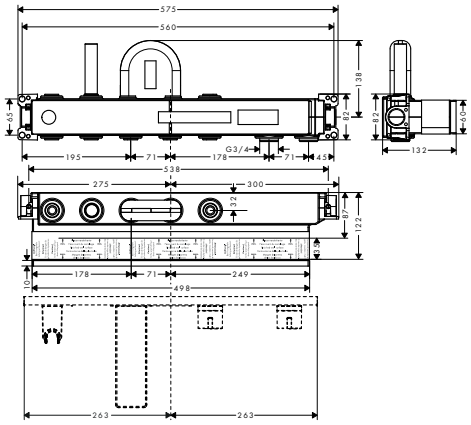

ShowerSelect glass thermostatic mixers for concealed installation



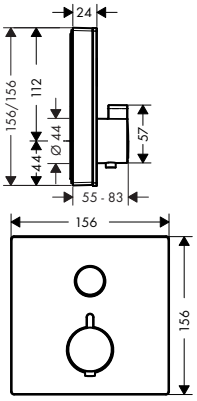

ShowerSelect Glass Thermostat for concealed installation for 1 function · 1 outlet · Select push-button on/off control for 1 outlet · flow rate hand shower connection at 0.3 MPa: 26 l/ min · thermostat cartridge, Select valve · min. operating pressure: 1 bar · max. operating pressure: 10 bar · safety lock at 40° C · temperature limitation adjustable · connection type: basic set · Thermostat is delivered with button On/Off	White/Chrome Black/Chrome	15737400 15737600	655.30 655.30
Required parts: · Basic set iBox universal		01800180	130.80
Optional parts:			
· Extension iBox universal basic set 2.5 cm		13595000	46.50
· Extension element ShowerSelect glass	Chrome	13604000	92.40



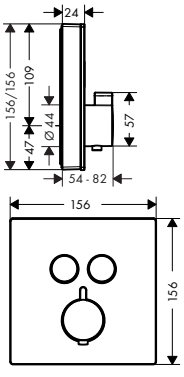

ShowerSelect Glass Thermostat for concealed installation for 2 functions · 2 outlets · simultaneous use of several outlets · Select push-button on/off control for 2 outlets · flow rate upper outlet: 25 l/ min · flow rate lower outlet: 23 l/ min · thermostat cartridge, Select valve · min. operating pressure: 1 bar · max. operating pressure: 10 bar · safety lock at 40° C · temperature limitation adjustable · connection type: basic set · Thermostat is delivered with buttons hand shower and Rain large	White/Chrome Black/Chrome	15738400 15738600	716.80 716.80
Required parts: · Basic set iBox universal		01800180	130.80
Optional parts:			
· Extension iBox universal basic set 2.5 cm		13595000	46.50
· Extension element ShowerSelect glass	Chrome	13604000	92.40

Measurements within scale drawings are in mm.

Technical specifications and units of measure are subject to change.

	finish	code no.	Euro
 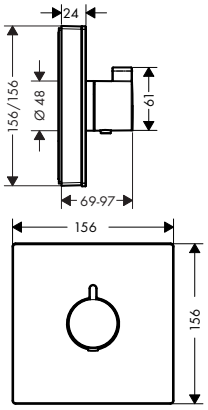			
ShowerSelect Glass Thermostat HighFlow for concealed installation · maximum flow rate at 0.3 MPa: 42 l/ min · flow rate upper outlet: 42 l/ min · flow rate lower outlet: 42 l/ min · thermostat cartridge · safety lock at 40° C · temperature limitation adjustable · connection type: basic set · dirt filter included	White/Chrome Black/Chrome	15734400 15734600	476.10 476.10
Required parts: · Basic set iBox universal		01800180	130.80
Optional parts: · ShowerSelect Glass Valve for concealed installation for 3 functions · Extension iBox universal basic set 2.5 cm · Extension element ShowerSelect glass	White/Chrome Black/Chrome Chrome	15736400 15736600 13595000 13604000	476.10 476.10 46.50 92.40
 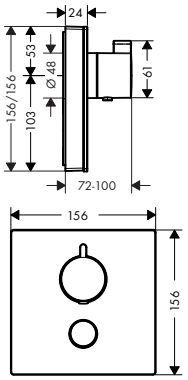			
ShowerSelect Glass Thermostat HighFlow for concealed installation for 1 function and additional outlet · 1 function and 1 additional outlet · Select push-button on/off control for 1 outlet · flow rate hand shower connection at 0.3 MPa: 34 l/ min · flow rate upper outlet: 59 l/ min · thermostat cartridge, Select valve · min. operating pressure: 1 bar · max. operating pressure: 10 bar · safety lock at 40° C · temperature limitation adjustable · connection type: basic set · dirt filter included · Thermostat is delivered with button hand shower	White/Chrome Black/Chrome	15735400 15735600	655.30 655.30
Required parts: · Basic set iBox universal		01800180	130.80
Optional parts: · ShowerSelect Glass Valve for concealed installation for 3 functions · Extension iBox universal basic set 2.5 cm · Extension element ShowerSelect glass	White/Chrome Black/Chrome Chrome	15736400 15736600 13595000 13604000	476.10 476.10 46.50 92.40
 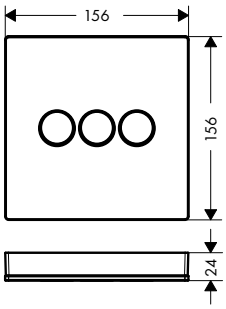			
ShowerSelect Glass Valve for concealed installation for 3 functions · 3 outlets · simultaneous use of several outlets · Select valve · connection type: basic set · Thermostat is delivered with buttons Waterfall, Rain large, Mono	White/Chrome Black/Chrome	15736400 15736600	476.10 476.10
Required parts: · Basic set iBox universal		01800180	130.80
Optional parts: · ShowerSelect Glass Thermostat HighFlow for concealed installation · ShowerSelect Glass Thermostat HighFlow for concealed installation for 1 function and additional outlet · Extension iBox universal basic set 2.5 cm · Extension element ShowerSelect glass	White/Chrome Black/Chrome White/Chrome Black/Chrome Chrome	15734400 15734600 15735400 15735600 13595000 13604000	476.10 476.10 655.30 655.30 46.50 92.40

Measurements within scale drawings are in mm.

Technical specifications and units of measure are subject to change.

Optional parts - buttons - please order separately

	finish	code no.	Euro
 **Symbol ON/OFF**	White Black	92579450 92579610	23.20 23.20
 **Symbol handshower**	White Black	92573450 92573610	23.20 23.20
 **Symbol showerhead Rain large**	White Black	92571450 92571610	23.20 23.20
 **Symbol showerhead Rain small**	White Black	92572450 92572610	23.20 23.20
 **Symbol Rain Flow**	White Black	92574450 92574610	23.20 23.20
 **Symbol Whirl**	White Black	92575450 92575610	23.20 23.20
 **Symbol Mono**	White Black	92576450 92576610	23.20 23.20
 **Symbol Tub**	White Black	92577450 92577610	23.20 23.20
 **Symbol Body spray**	White Black	92578450 92578610	23.20 23.20
 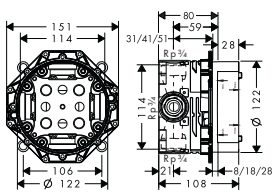 **NEW**	**Basic set iBox universal** · connection thread Rp ¾ · suitable for all shower, bath tub and thermostat finish sets for concealed installation · rotationally-symmetric installation · sound-decoupled installation · connection dimension: DN20	01800180	130.80
	Alternative products: · Basic set iBox universal with shut-off unit	01850180	169.90
	Optional parts: · Extension iBox universal basic set 2.5 cm · Fastening rail set for iBox universal · Assembly aid for iBox universal	13595000 96615000 93500000	46.50 33.00 12.00

Measurements within scale drawings are in mm.

Technical specifications and units of measure are subject to change.

	finish	code no.	Euro
Extension element ShowerSelect glass · for installation between tiles and finish set · diameter: 157 mm · extension length: 22 mm	Chrome	13604000	92.40





ShowerSelect mixers for concealed installation



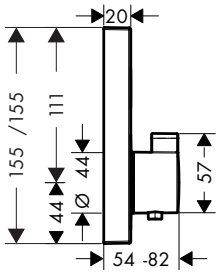

	finish	code no.	Euro
ShowerSelect Thermostat for concealed installation for 1 function · 1 outlet · Select push-button on/off control for 1 outlet · flow rate hand shower connection at 0.3 MPa: 26 l/ min · thermostat cartridge, Select valve · min. operating pressure: 1 bar · max. operating pressure: 10 bar · safety lock at 40° C · temperature limitation adjustable · connection type: basic set · Thermostat is delivered with button On/Off	Chrome	15762000	530.00
Required parts: · Basic set iBox universal		01800180	130.80
Optional parts: · ShowerSelect Extension element · Extension iBox universal basic set 2.5 cm	Chrome	13593000 13595000	43.10 46.50



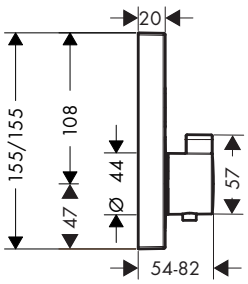

		finish	code no.	Euro
ShowerSelect Thermostat for concealed installation for 2 functions · 2 outlets · simultaneous use of several outlets · Select push-button on/off control for 2 outlets · flow rate upper outlet: 25 l/ min · flow rate lower outlet: 23 l/ min · thermostat cartridge, Select valve · min. operating pressure: 1 bar · max. operating pressure: 10 bar · safety lock at 40° C · temperature limitation adjustable · connection type: basic set · Thermostat is delivered with buttons hand shower and Rain large		Chrome	15763000	577.20
	NEW	Brushed Bronze	15763140	866.30
	NEW	Brushed Black	15763340	866.30
		Chrome		
	NEW	Matt Black	15763670	807.90
	NEW	Matt White	15763700	807.90
	NEW	Polished Gold Optic	15763990	866.30
Required parts: · Basic set iBox universal			01800180	130.80
Optional parts: · ShowerSelect Extension element · Extension iBox universal basic set 2.5 cm		Chrome	13593000 13595000	43.10 46.50

Measurements within scale drawings are in mm.

Technical specifications and units of measure are subject to change.

	finish	code no.	Euro



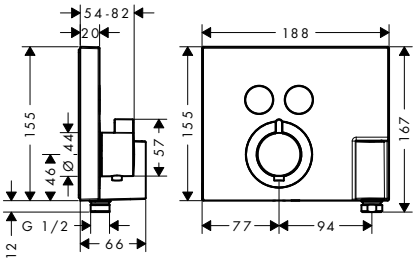

ShowerSelect Thermostat for concealed installation for 2 functions with hose connection and shower holder
- consists of: Thermostat, shower holder
- 2 outlets
- simultaneous use of several outlets
- Select push-button on/off control for 2 outlets
- flow rate hand shower connection at 0.3 MPa: 14 l/ min
- flow rate upper outlet: 29 l/ min
- thermostat cartridge, Select valve
- min. operating pressure: 1 bar
- max. operating pressure: 10 bar
- safety lock at 40° C
- temperature limitation adjustable
- hose nut: for shower hoses with conical nut on both sides
- connection type: basic set
- Thermostat is delivered with buttons hand shower and Rain large

	finish	code no.	Euro
	Chrome	15765000	706.80

Required parts:

· Basic set iBox universal		01800180	130.80

Optional parts:

· Extension element ShowerSelect FixFit Porter	Chrome	13601000	104.80



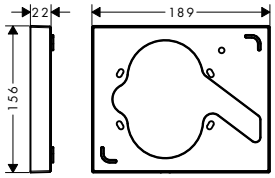

Extension element ShowerSelect FixFit Porter
- for installation between tiles and finish set
- extension length: 22 mm

	finish	code no.	Euro
	Chrome	13601000	104.80

Optional parts:

· ShowerSelect Thermostat for concealed installation for 2 functions with hose connection and shower holder	Chrome	15765000	706.80



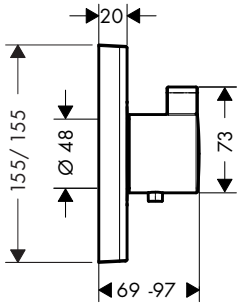

ShowerSelect Thermostat HighFlow for concealed installation
- maximum flow rate at 0.3 MPa: 42 l/ min
- flow rate upper outlet: 42 l/ min
- flow rate lower outlet: 42 l/ min
- thermostat cartridge
- safety lock at 40° C
- temperature limitation adjustable
- connection type: basic set
- dirt filter included

	finish	code no.	Euro
	Chrome	15760000	382.90

Required parts:

· Basic set iBox universal		01800180	130.80

Optional parts:

· ShowerSelect Valve for concealed installation for 3 functions	Chrome	15764000	382.90
· ShowerSelect Extension element	Chrome	13593000	43.10
· Extension iBox universal basic set 2.5 cm		13595000	46.50

Measurements within scale drawings are in mm.

Technical specifications and units of measure are subject to change.

	finish	code no.	Euro
 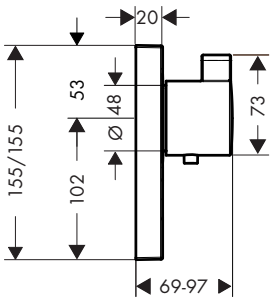 **ShowerSelect Thermostat HighFlow for concealed installation for 1 function and additional outlet** · 1 function and 1 additional outlet · Select push-button on/off control for 1 outlet · flow rate hand shower connection at 0.3 MPa: 34 l/ min · flow rate upper outlet: 59 l/ min · thermostat cartridge, Select valve · min. operating pressure: 1 bar · max. operating pressure: 10 bar · safety lock at 40° C · temperature limitation adjustable · connection type: basic set · dirt filter included · Thermostat is delivered with button hand shower	Chrome	15761000	530.00
Required parts:			
· Basic set iBox universal		01800180	130.80
Optional parts:			
· ShowerSelect Valve for concealed installation for 3 functions	Chrome	15764000	382.90
· ShowerSelect Extension element	Chrome	13593000	43.10
· Extension iBox universal basic set 2.5 cm		13595000	46.50
 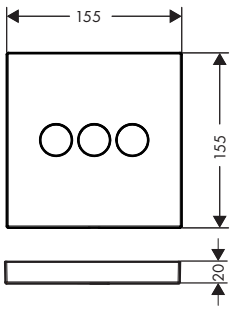 **ShowerSelect Valve for concealed installation for 3 functions** · 3 outlets · simultaneous use of several outlets · maximum flow rate at 0.3 MPa: 30 l/ min · Select valve · connection type: basic set · Thermostat is delivered with buttons hand shower, Rain large, Waterfall	Chrome	15764000	382.90
Required parts:			
· Basic set iBox universal		01800180	130.80
Optional parts:			
· ShowerSelect Thermostat HighFlow for concealed installation	Chrome	15760000	382.90
· ShowerSelect Thermostat HighFlow for concealed installation for 1 function and additional outlet	Chrome	15761000	530.00
· ShowerSelect Extension element	Chrome	13593000	43.10
· Extension iBox universal basic set 2.5 cm		13595000	46.50

Measurements within scale drawings are in mm.

Technical specifications and units of measure are subject to change.

ShowerSelect mixers for concealed installation

	finish	code no.	Euro
 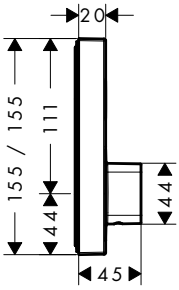	**ShowerSelect Mixer for concealed installation for 1 function** · 1 outlet · connection type: basic set · flow rate of hand shower at 3 bar: 21 l/ min · ceramic cartridge for temperature control, Select valve · min. operating pressure: 1 bar · max. operating pressure: 10 bar · temperature limitation adjustable · Thermostat is delivered with button On/Off	Chrome	15767000	441.80
	Required parts:			
	· Basic set iBox universal		01800180	130.80
	Optional parts:			
	· ShowerSelect Extension element	Chrome	13593000	43.10
	· Extension iBox universal basic set 2.5 cm		13595000	46.50
 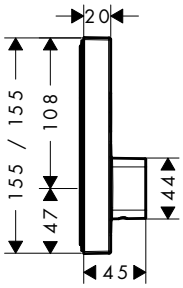	**ShowerSelect Mixer for concealed installation for 2 functions** · 2 outlets · simultaneous use of several outlets · connection type: basic set · flow rate upper outlet: 20 l/ min · flow rate lower outlet: 20 l/ min · ceramic cartridge for temperature control, Select valve · min. operating pressure: 1 bar · max. operating pressure: 10 bar · temperature limitation adjustable · Thermostat is delivered with buttons hand shower and Rain large	Chrome	15768000	489.00
	Required parts:			
	· Basic set iBox universal		01800180	130.80
	Optional parts:			
	· ShowerSelect Extension element	Chrome	13593000	43.10
	· Extension iBox universal basic set 2.5 cm		13595000	46.50
 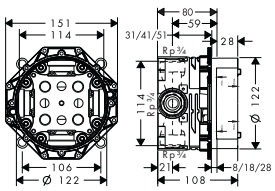	**Basic set iBox universal** · connection thread Rp ¾ · suitable for all shower, bath tub and thermostat finish sets for concealed installation · rotationally-symmetric installation · sound-decoupled installation · connection dimension: DN20		01800180	130.80
	Alternative products:			
	· Basic set iBox universal with shut-off unit		01850180	169.90
	Optional parts:			
	· Extension iBox universal basic set 2.5 cm		13595000	46.50
	· Fastening rail set for iBox universal		96615000	33.00
NEW	· Assembly aid for iBox universal		93500000	12.00

Measurements within scale drawings are in mm.

Technical specifications and units of measure are subject to change.

ShowerSelect S thermostatic mixers for concealed installation

	finish	code no.	Euro



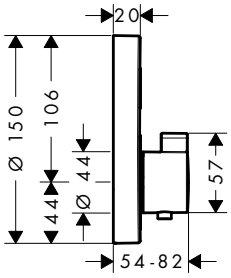

ShowerSelect S Thermostat for concealed installation for 1 function
- 1 outlet
- Select push-button on/off control for 1 outlet
- thermostat cartridge, Select valve
- min. operating pressure: 1 bar
- max. operating pressure: 10 bar
- safety lock at 40° C
- temperature limitation adjustable
- connection type: basic set
- Thermostat is delivered with button On/Off

Required parts:			
· Basic set iBox universal		01800180	130.80
Optional parts:			
· Extension element 15 cm	Chrome	13597000	44.10
· Extension iBox universal basic set 2.5 cm		13595000	46.50



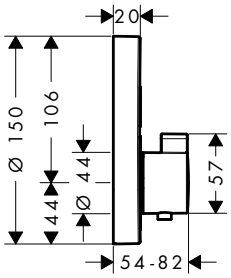

ShowerSelect S Thermostat for concealed installation for 2 functions
- 2 outlets
- simultaneous use of several outlets
- Select push-button on/off control for 2 outlets
- flow rate upper outlet: 25 l/ min
- flow rate lower outlet: 23 l/ min
- thermostat cartridge, Select valve
- min. operating pressure: 1 bar
- max. operating pressure: 10 bar
- safety lock at 40° C
- temperature limitation adjustable
- connection type: basic set
- Thermostat is delivered with buttons hand shower and Rain large

	Chrome	15743000	577.20
NEW	Brushed Bronze*	15743140	865.80
NEW	Brushed Black Chrome*	15743340	865.80
NEW	Matt Black*	15743670	808.10
NEW	Matt White*	15743700	808.10
NEW	Polished Gold Optic*	15743990	865.80
Required parts:			
· Basic set iBox universal		01800180	130.80
Optional parts:			
· Extension element 15 cm	Chrome	13597000	44.10
· Extension iBox universal basic set 2.5 cm		13595000	46.50

***available from April 2020**



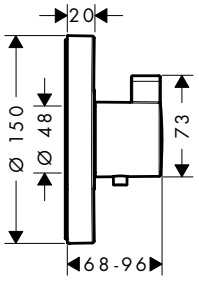

ShowerSelect S Thermostat HighFlow for concealed installation
- maximum flow rate at 0.3 MPa: 42 l/ min
- flow rate upper outlet: 42 l/ min
- flow rate lower outlet: 42 l/ min
- thermostat cartridge
- safety lock at 40° C
- temperature limitation adjustable
- connection type: basic set
- dirt filter included

	Chrome	15741000	382.90
Required parts:			
· Basic set iBox universal		01800180	130.80
Optional parts:			
· ShowerSelect S Valve for concealed installation for 3 functions	Chrome	15745000	382.90
· Extension element 15 cm	Chrome	13597000	44.10
· Extension iBox universal basic set 2.5 cm		13595000	46.50

Measurements within scale drawings are in mm.

Technical specifications and units of measure are subject to change.

	finish	code no.	Euro
 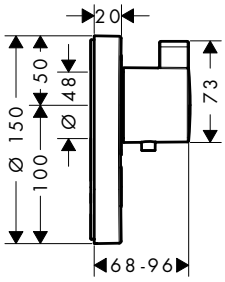			
ShowerSelect S Thermostat HighFlow for concealed installation for 1 function and additional outlet · 1 function and 1 additional outlet · flow rate hand shower connection at 0.3 MPa: 34 l/ min · flow rate upper outlet: 59 l/ min · thermostat cartridge · min. operating pressure: 1 bar · max. operating pressure: 10 bar · safety lock at 40° C · temperature limitation adjustable · connection type: basic set · Thermostat is delivered with button hand shower	Chrome	15742000	530.00
Required parts:			
· Basic set iBox universal		01800180	130.80
Optional parts:			
· ShowerSelect S Valve for concealed installation for 3 functions	Chrome	15745000	382.90
· Extension element 15 cm	Chrome	13597000	44.10
· Extension iBox universal basic set 2.5 cm		13595000	46.50
 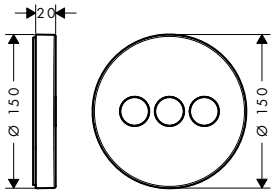			
ShowerSelect S Valve for concealed installation for 3 functions · 3 outlets · simultaneous use of several outlets · Select valve · min. operating pressure: 1 bar · max. operating pressure: 10 bar · connection type: basic set · Thermostat is delivered with buttons Rain large, Whirl, Waterfall	Chrome	15745000	382.90
Required parts:			
· Basic set iBox universal		01800180	130.80
Optional parts:			
· ShowerSelect S Thermostat HighFlow for concealed installation	Chrome	15741000	382.90
· ShowerSelect S Thermostat HighFlow for concealed installation for 1 function and additional outlet	Chrome	15742000	530.00
· Extension element 15 cm	Chrome	13597000	44.10
· Extension iBox universal basic set 2.5 cm		13595000	46.50

ShowerSelect S mixers for concealed installation

 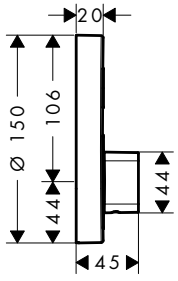			
ShowerSelect S Mixer for concealed installation for 1 function · 1 outlet · connection type: basic set · flow rate of hand shower at 3 bar: 21 l/ min · ceramic cartridge for temperature control, Select valve · min. operating pressure: 1 bar · max. operating pressure: 10 bar · temperature limitation adjustable · Thermostat is delivered with button On/Off	Chrome	15747000	441.80
Required parts:			
· Basic set iBox universal		01800180	130.80
Optional parts:			
· Extension element 15 cm	Chrome	13597000	44.10
· Extension iBox universal basic set 2.5 cm		13595000	46.50

Measurements within scale drawings are in mm.

Technical specifications and units of measure are subject to change.

	finish	code no.	Euro
 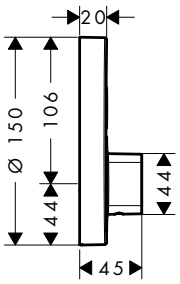 **ShowerSelect S Mixer for concealed installation for 2 functions** · 2 outlets · simultaneous use of several outlets · connection type: basic set · flow rate upper outlet: 20 l/ min · flow rate lower outlet: 20 l/ min · ceramic cartridge for temperature control, Select valve · min. operating pressure: 1 bar · max. operating pressure: 10 bar · temperature limitation adjustable · Thermostat is delivered with buttons hand shower and Rain large	Chrome	15748000	489.00
Required parts: · Basic set iBox universal		01800180	130.80
Optional parts: · Extension element 15 cm · Extension iBox universal basic set 2.5 cm	Chrome	13597000 13595000	44.10 46.50

Optional parts - buttons - please order separately

 **Symbol ON/OFF**	**NEW**	Matt Black	93579670	9.20
	NEW	Matt White	93579700	9.20
		Satin Chrome	93579880	6.10
 **Symbol handshower**	**NEW**	Matt Black	93573670	9.20
	NEW	Matt White	93573700	9.20
		Satin Chrome	93573880	6.10
 **Symbol showerhead Rain large**	**NEW**	Matt Black	93571670	9.20
	NEW	Matt White	93571700	9.20
		Satin Chrome	93571880	6.10
 **Symbol showerhead Rain small**	**NEW**	Matt Black	93572670	9.20
	NEW	Matt White	93572700	9.20
		Satin Chrome	93572880	6.10
 **Symbol Rain Flow**	**NEW**	Matt Black	93574670	9.20
	NEW	Matt White	93574700	9.20
		Satin Chrome	93574880	6.10
 **Symbol Whirl**	**NEW**	Matt Black	93575670	9.20
	NEW	Matt White	93575700	9.20
		Satin Chrome	93575880	6.10
 **Symbol Mono**	**NEW**	Matt Black	93576670	9.20
	NEW	Matt White	93576700	9.20
		Satin Chrome	93576880	6.10
 **Symbol Tub**	**NEW**	Matt Black		9.20
	NEW	Matt White		9.20
		Satin Chrome	93577880	6.10

Measurements within scale drawings are in mm.

Technical specifications and units of measure are subject to change.

		finish	code no.	Euro
	**Symbol Body spray**	**NEW** Matt Black	93578670	9.20
		NEW Matt White	93578700	9.20
		Satin Chrome	93578880	6.10
 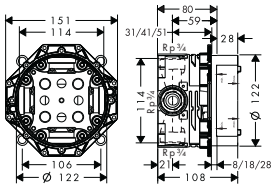	**Basic set iBox universal** · connection thread Rp ¾ · suitable for all shower, bath tub and thermostat finish sets for concealed installation · rotationally-symmetric installation · sound-decoupled installation · connection dimension: DN20		01800180	130.80
	Alternative products: · Basic set iBox universal with shut-off unit		01850180	169.90
	Optional parts: · Extension iBox universal basic set 2.5 cm		13595000	46.50
	· Fastening rail set for iBox universal		96615000	33.00
NEW	· Assembly aid for iBox universal		93500000	12.00

Ecostat Square thermostatic mixers and valves for concealed installation

 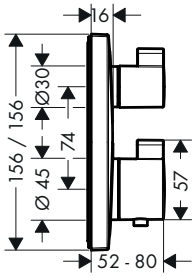	**Ecostat Square Thermostat for concealed installation for 1 function** · 1 outlet · maximum flow rate at 0.3 MPa: 26 l/ min · thermostat cartridge · min. operating pressure: 1 bar · max. operating pressure: 10 bar · safety lock at 40° C · temperature limitation adjustable · connection type: basic set	Chrome	15712000	373.20
	Required parts: · Basic set iBox universal		01800180	130.80
	Optional parts: · ShowerSelect Extension element	Chrome	13593000	43.10
	· Extension iBox universal basic set 2.5 cm		13595000	46.50
 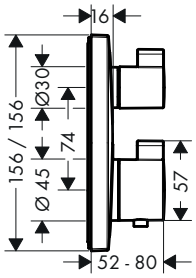	**Ecostat Square Thermostat for concealed installation for 2 functions** · 2 outlets · maximum flow rate at 0.3 MPa: 26 l/ min · thermostat cartridge, shut-off/ diverter valve · min. operating pressure: 1 bar · max. operating pressure: 10 bar · safety lock at 40° C · temperature limitation adjustable · connection type: basic set	Chrome	15714000	418.90
		NEW Brushed Bronze	15714140	628.70
		NEW Brushed Black Chrome	15714340	628.70
		NEW Matt Black	15714670	586.80
		NEW Matt White	15714700	586.80
		NEW Polished Gold Optic	15714990	628.70
	Required parts: · Basic set iBox universal		01800180	130.80
	Optional parts: · ShowerSelect Extension element	Chrome	13593000	43.10
	· Extension iBox universal basic set 2.5 cm		13595000	46.50

Measurements within scale drawings are in mm.

Ecostat E thermostatic mixers and valves for concealed installation

	finish	code no.	Euro
 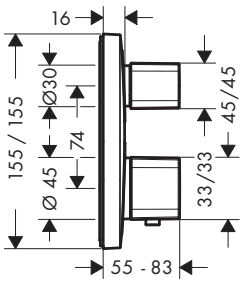			
Ecostat E Thermostat for concealed installation for 1 function · 1 outlet · flow rate at 3 bar: 26 l/ min · thermostat cartridge · safety lock at 40° C · temperature limitation adjustable · connection type: basic set	Chrome	15707000	373.20
Required parts:			
· Basic set iBox universal		01800180	130.80
Optional parts:			
· PuraVida Extension element	Chrome	15597000	43.00
· Extension iBox universal basic set 2.5 cm		13595000	46.50
 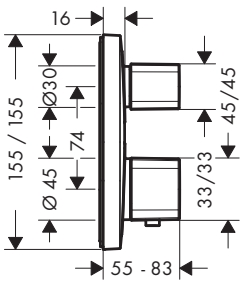			
Ecostat E Thermostat for concealed installation for 2 functions · 2 outlets · maximum flow rate at 0.3 MPa: 26 l/ min · flow rate at 3 bar: 26 l/ min · thermostat cartridge, shut-off/ diverter valve · safety lock at 40° C · temperature limitation adjustable · connection type: basic set	Chrome	15708000	418.90
Required parts:			
· Basic set iBox universal		01800180	130.80
Optional parts:			
· PuraVida Extension element	Chrome	15597000	43.00
· Extension iBox universal basic set 2.5 cm		13595000	46.50
 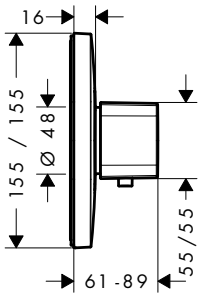			
Ecostat E Thermostat HighFlow for concealed installation · maximum flow rate at 0.3 MPa: 59 l/ min · flow rate at 3 bar: 59 l/ min · thermostat cartridge · safety lock at 40° C · temperature limitation adjustable · connection type: basic set	Chrome	15706000	373.20
Required parts:			
· Basic set iBox universal		01800180	130.80
Optional parts:			
· PuraVida Shut-off/ diverter valve iControl for concealed installation for 3 functions	Chrome	15777000	418.80
· PuraVida Extension element	Chrome	15597000	43.00
· Extension iBox universal basic set 2.5 cm		13595000	46.50
 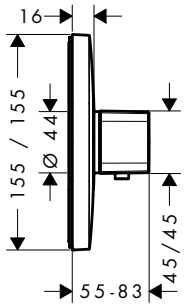			
Ecostat E Thermostat for concealed installation · flow rate at 3 bar: 37.9 l/ min · thermostat cartridge · safety lock at 40° C · temperature limitation adjustable · connection type: basic set	Chrome	15705000	229.70
Required parts:			
· Basic set iBox universal		01800180	130.80
Optional parts:			
· PuraVida Extension element	Chrome	15597000	43.00
· Extension iBox universal basic set 2.5 cm		13595000	46.50

Measurements within scale drawings are in mm.

Technical specifications and units of measure are subject to change.

Ecostat S thermostatic mixers and valves for concealed installation

	finish	code no.	Euro
 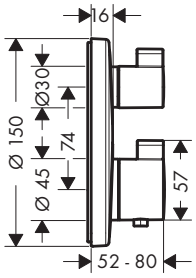			
Ecostat S Thermostat for concealed installation for 1 function · 1 outlet · thermostat cartridge, ceramic valves 90° · safety lock at 40° C · temperature limitation adjustable · connection type: basic set	Chrome	15757000	373.20
Required parts:			
· Basic set iBox universal		01800180	130.80
Optional parts:			
· Extension element 15 cm	Chrome	13597000	44.10
· Extension iBox universal basic set 2.5 cm		13595000	46.50
 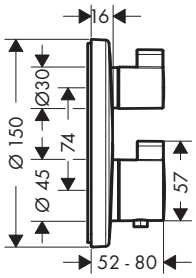			
Ecostat S Thermostat for concealed installation for 2 functions · 2 outlets · thermostat cartridge, shut-off/ diverter valve · safety lock at 40° C · temperature limitation adjustable · connection type: basic set	Chrome **NEW** Brushed Bronze* **NEW** Brushed Black Chrome* **NEW** Matt Black* **NEW** Matt White* **NEW** Polished Gold Optic*	15758000 15758140 15758340 15758670 15758700 15758990	418.90 628.40 628.40 586.50 586.50 628.40
			***available from April 2020**
Required parts:			
· Basic set iBox universal		01800180	130.80
Optional parts:			
· Extension element 15 cm	Chrome	13597000	44.10
· Extension iBox universal basic set 2.5 cm		13595000	46.50
 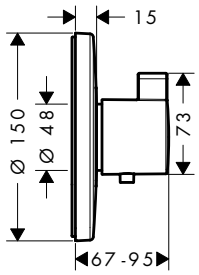			
Ecostat S Thermostat HighFlow for concealed installation · maximum flow rate at 0.3 MPa: 59 l/ min · flow rate at 3 bar: 59 l/ min · thermostat cartridge · safety lock at 40° C · temperature limitation adjustable · connection type: basic set	Chrome	15756000	373.20
Required parts:			
· Basic set iBox universal		01800180	130.80
Optional parts:			
· Extension element 15 cm	Chrome	13597000	44.10
· Extension iBox universal basic set 2.5 cm		13595000	46.50
 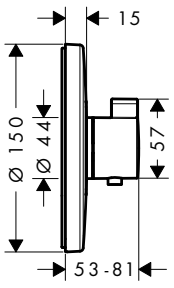			
Ecostat S Thermostat for concealed installation · maximum flow rate at 0.3 MPa: 37.9 l/ min · thermostat cartridge · safety lock at 40° C · temperature limitation adjustable · connection type: basic set	Chrome	15755000	229.70
Required parts:			
· Basic set iBox universal		01800180	130.80
Optional parts:			
· Extension element 15 cm	Chrome	13597000	44.10
· Extension iBox universal basic set 2.5 cm		13595000	46.50

Measurements within scale drawings are in mm.

Technical specifications and units of measure are subject to change.

Thermostatic mixers/ valves

	finish	code no.	Euro
 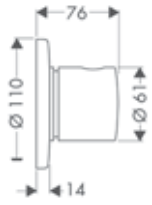			
Shut-off/ diverter valve S Trio/ Quattro for concealed installation	Chrome	15932000	121.20
Required parts:			
· Basic set for Trio shut-off/ diverter valve for concealed installation		15981180	159.00
· Basic set for Quattro four-way diverter valve for concealed installation		15930180	250.70
 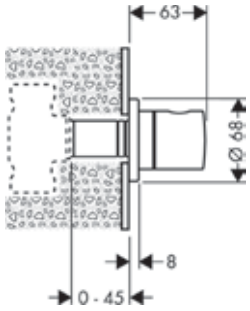			
Shut-off valve S for concealed installation	Chrome	15972000	90.60
Required parts:			
· Basic set 52 l/ min for shut-off valve for concealed installation spindle		15973180	80.60
· Basic set 40 l/ min for shut-off valve for concealed installation ceramic		15974180	83.70
· Basic set 130 l/ min for shut-off valve for concealed installation spindle		15970180	87.50
Optional parts:			
· Extension set 2.5 cm		96370000	44.80
 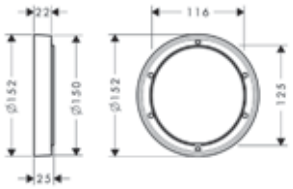			
Extension element 15 cm	Chrome	13597000	44.10
· for installation between tiles and finish set			
· suitable for all shower and bath tub finish sets Ø 150 mm			
· diameter: 152 mm			
· extension length: 22 mm			

PuraVida thermostatic mixers and valves for concealed installation

 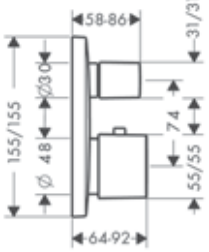			
PuraVida Thermostat for concealed installation with shut-off/ diverter valve	Chrome White/Chrome	15771000 15771400	1,163.60 1,163.60
· 2 outlets			
· flow rate: 26 l/ min			
· thermostat cartridge			
· min. operating pressure: 1 bar			
· max. operating pressure: 10 bar			
· safety lock at 40° C			
· temperature limitation adjustable			
· connection type: basic set			
Required parts:			
· Basic set iBox universal		01800180	130.80
Optional parts:			
· PuraVida Extension element	Chrome	15597000	43.00

Measurements within scale drawings are in mm.

Technical specifications and units of measure are subject to change.

	finish	code no.	Euro
 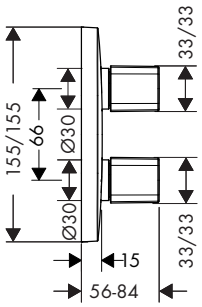			
PuraVida Shut-off/ diverter valve iControl for concealed installation for 3 functions · 3 outlets · simultaneous utilization by 3 outlets · connection dimension: DN20	Chrome	15777000	418.80
Required parts:			
· Basic set iBox universal		01800180	130.80
Optional parts:			
· PuraVida Extension element	Chrome	15597000	43.00
· Extension iBox universal basic set 2.5 cm		13595000	46.50
· Flushing board iControl	Chrome	15956000	57.80
 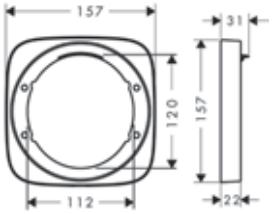			
PuraVida Extension element · for installation between tiles and finish set · diameter: 157 mm · extension length: 31 mm	Chrome	15597000	43.00
 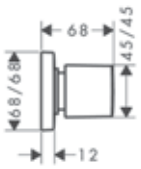			
PuraVida Shut-off valve for concealed installation · connection type: DN15/DN20	Chrome White/Chrome	15978000 15978400	142.50 142.50
Required parts:			
· Basic set 52 l/ min for shut-off valve for concealed installation spindle		15973180	80.60
· Basic set 40 l/ min for shut-off valve for concealed installation ceramic		15974180	83.70
· Basic set 130 l/ min for shut-off valve for concealed installation spindle		15970180	87.50
 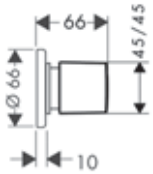			
***Metris* Shut-off valve E for concealed installation** · connection type: DN15/DN20	Chrome	31677000	36.70
Required parts:			
· Basic set 52 l/ min for shut-off valve for concealed installation spindle		15973180	80.60
· Basic set 40 l/ min for shut-off valve for concealed installation ceramic		15974180	83.70
· Basic set 130 l/ min for shut-off valve for concealed installation spindle		15970180	87.50
· Extension set 2.5 cm		96370000	44.80
 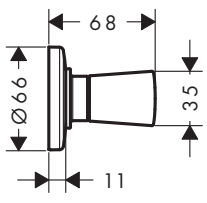			
Logis Shut-off valve for concealed installation · connection type: DN15/DN20	Chrome	71970000	27.40
Required parts:			
· Basic set 52 l/ min for shut-off valve for concealed installation spindle		15973180	80.60
· Basic set 40 l/ min for shut-off valve for concealed installation ceramic		15974180	83.70
· Basic set 130 l/ min for shut-off valve for concealed installation spindle		15970180	87.50
Optional parts:			
· Extension set 2.5 cm		96370000	44.80

Measurements within scale drawings are in mm.

Basic sets

		finish	code no.	Euro
	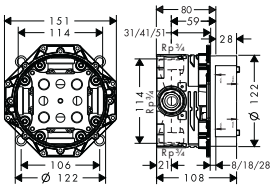	**Basic set iBox universal** · connection thread Rp ¾ · suitable for all shower, bath tub and thermostat finish sets for concealed installation · rotationally-symmetric installation · sound-decoupled installation · connection dimension: DN20		01800180	130.80
		Alternative products: · Basic set iBox universal with shut-off unit		01850180	169.90
		Optional parts: · Extension iBox universal basic set 2.5 cm		13595000	46.50
		· Fastening rail set for iBox universal		96615000	33.00
		· Assembly aid for iBox universal	**NEW**	93500000	12.00
	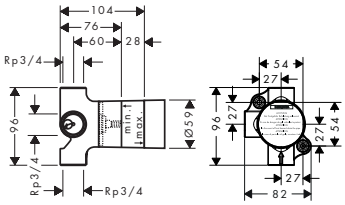	**Basic set for Trio shut-off/ diverter valve for concealed installation** · 2 outlets · simultaneous utilization by 2 outlets · suitable for all Trio finish sets · flow rate: 65 l/ min · connection dimension: DN20		15981180	159.00
		Optional parts: · Extension set 2.5 cm		96370000	44.80
	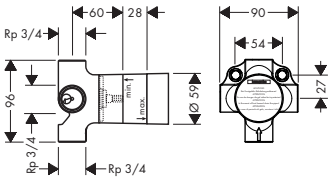	**Basic set for Quattro four-way diverter valve for concealed installation** · requires volume control · 3 outlets · simultaneous utilization by 2 outlets · suitable for all Quattro finish sets · flow rate: 65 l/ min · connection dimension: DN20		15930180	250.70
		Optional parts: · Extension set 2.5 cm		96370000	44.80
	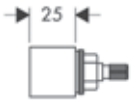	**Extension set 2.5 cm** · extension length: 25 mm		96370000	44.80
	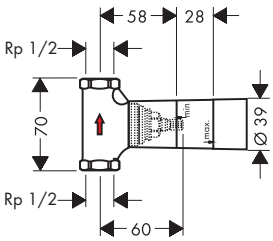	**Basic set 52 l/ min for shut-off valve for concealed installation spindle** · connection type: DN15 · suitable for all shut-off valves finish sets · flow rate: 52 l/ min · connection dimension: DN15		15973180	80.60
		Alternative products: · Basic set 40 l/ min for shut-off valve for concealed installation ceramic		15974180	83.70
		· Basic set 130 l/ min for shut-off valve for concealed installation spindle		15970180	87.50
		Optional parts: · Extension set 2.5 cm		96370000	44.80

Measurements within scale drawings are in mm.

Technical specifications and units of measure are subject to change.

hansgrohe

iBox® universal



Hansgrohe iBox® universal: one for all. All finish sets and overhead showers at a glance.

iBox universal



01800180

PuraVida bath



15445, -000, -400
15447, -000, -400

PuraVida shower



15665, -000, -400

PuraVida
thermostatic mixer
with shut-off valve



15771, -000, -400

PuraVida iControl
with shut-off/
diverter valve



15777, -000

Metropol bath
with lever handle



32545, -000
32546, -000

Metropol bath
with loop handle



74545, -000
74546, -000

Metropol shower
with lever handle



32565, -000

Metropol shower
with loop handle



74565, -000

Metropol Classic
bath



31345, -000, -090

Metropol Classic
shower



31365, -000, -090

Metris bath



31493, -000
31487, -000

Metris shower



31685, -000

Metris bath



31454, -000
31451, -000

Metris shower



31456, -000

Metris S bath



31465, -000
31466, -000

Metris S shower



31665, -000

Talis E bath



71745, -000
71474, -000

Talis E shower



71765, -000
71768, -000

Talis S bath



72405, -000
72406, -000

Talis S shower



72605, -000

Talis S bath



32475, -000
32477, -000

Talis S shower



32675, -000

Focus bath



31945, -000
31946, -000

Focus shower



31965, -000

Novus bath



71045, -000

Novus shower



71065, -000

Logis bath



71405, -000

Logis shower



71605, -000

Eocstat
thermostatic mixer
for 1 function



15712, -000

Eocstat
thermostatic mixer
for 2 functions



15714, -000

Ecostat E
thermostatic mixer



15705, -000

Ecostat E
thermostatic mixer
highflow



15706, -000

Ecostat E
thermostatic mixer
for 1 function



15707, -000

Ecostat E
thermostatic mixer
for 2 functions



15708, -000

Ecostat S
thermostatic mixer



15755, -000

Ecostat S
thermostatic mixer
highflow



15756, -000

Ecostat S
thermostatic mixer
with shut-off valve



15757, -000

Ecostat S
thermostatic mixer
with shut-off/diverter
valve



15758, -000

ShowerSelect
thermostatic mixer
for 1 function



15762, -000

ShowerSelect
thermostatic mixer
for 2 functions



15763, -000

ShowerSelect
thermostatic mixer
highflow for 1 function



15760, -000

ShowerSelect
thermostatic mixer
highflow for 1 function
and 1 additional
function



15761, -000

ShowerSelect
valve for 3 func-
tions



15764, -000

ShowerSelect
thermostatic mixer
for 2 functions with
FixFit and porter unit



15765, -000

ShowerSelect
mixer for 1 function



15767, -000

ShowerSelect
mixer for 2 functions



15768, -000

ShowerSelect glass
thermostatic mixer
for 1 function



15737, -400, -600

ShowerSelect glass
thermostatic mixer
for 2 functions



15738, -400, -600

ShowerSelect glass
thermostatic mixer
highflow for 1 function



15734, -400, -600

ShowerSelect glass
thermostatic mixer
highflow for 1 function
and 1 additional
function



15735, -400, -600

ShowerSelect glass
valve for 3 functions



15736, -400, -600

ShowerSelect S
thermostatic mixer
for 1 function



15744, -000

ShowerSelect S ther-
mostatic mixer
for 2 functions



15743, -000

ShowerSelect S
thermostatic mixer
highflow for 1 function



15741, -000

ShowerSelect S
thermostatic mixer
highflow for 1 function
and 1 additional
function



15742, -000

ShowerSelect S
valve for 3
functions



15745, -000

ShowerSelect S
mixer for 1 function



15747, -000

ShowerSelect S
mixer for 2 functions



15748, -000

Rainmaker Select
460 3jet



24007, -400

Rainmaker Select
460 2jet



24005, -400

Rainmaker Select
580 3jet



24001, -400

Raindance
Rainfall
240 Air 3jet



28410, -000

Raindance
Rainfall
180 Air 2jet



28433, -000

Raindance
Select E
300 3jet



26468, -000

iBox universal

		finish	code no.	Euro
	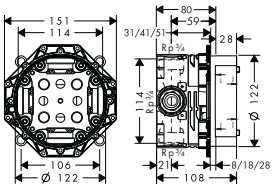			
	Basic set iBox universal · connection thread Rp ¾ · suitable for all shower, bath tub and thermostat finish sets for concealed installation · rotationally-symmetric installation · sound-decoupled installation · connection dimension: DN20		01800180	130.80
	Alternative products: · Basic set iBox universal with shut-off unit		01850180	169.90
	Optional parts: · Extension iBox universal basic set 2.5 cm · Fastening rail set for iBox universal		13595000 96615000	46.50 33.00
NEW	· Assembly aid for iBox universal		93500000	12.00
	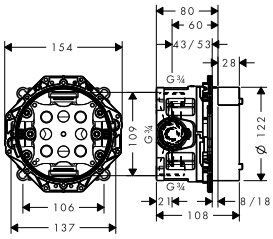			
	Basic set iBox universal with shut-off unit · connection thread Rp ¾ · suitable for all shower, bath tub and thermostat finish sets for concealed installation · sound-decoupled installation · connection dimension: DN20		01850180	169.90
	Alternative products: · Basic set iBox universal		01800180	130.80
	Optional parts: · Extension iBox universal basic set 2.5 cm · Fastening rail set for iBox universal		13595000 96615000	46.50 33.00
NEW	· Assembly aid for iBox universal		93500000	12.00
NEW 	**Assembly aid for iBox universal** · spirit levels for correct horizontal and vertical alignment of the iBox universal · with fixations to simply put the assembly aid on the iBox universal · markings for the tile spacer · 4 more fixation aids all around, thus against rotation		93500000	12.00
	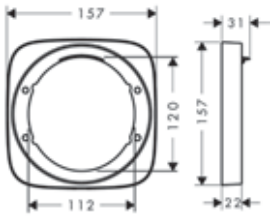			
	PuraVida Extension element · for installation between tiles and finish set · diameter: 157 mm · extension length: 31 mm	Chrome	15597000	43.00
	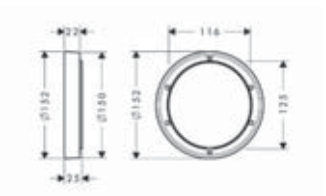			
	Extension element 15 cm · for installation between tiles and finish set · suitable for all shower and bath tub finish sets Ø 150 mm · diameter: 152 mm · extension length: 22 mm	Chrome	13597000	44.10

Measurements within scale drawings are in mm.

Technical specifications and units of measure are subject to change.

	finish	code no.	Euro
 	**ShowerSelect Extension element** · for installation between tiles and finish set · suitable for all shower and bath tub finish sets Ø 150 mm · diameter: 157 mm · extension length: 22 mm	Chrome	13593000	43.10
 	**Extension element ShowerSelect glass** · for installation between tiles and finish set · diameter: 157 mm · extension length: 22 mm	Chrome	13604000	92.40
 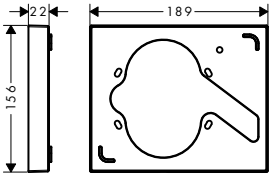	**Extension element ShowerSelect FixFit Porter** · for installation between tiles and finish set · extension length: 22 mm	Chrome	13601000	104.80
	Optional parts: · ShowerSelect Thermostat for concealed installation for 2 functions with hose connection and shower holder	Chrome	15765000	706.80
 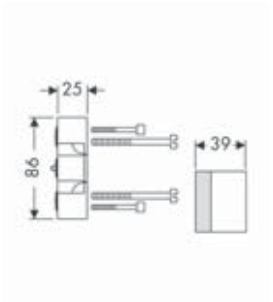	**Extension iBox universal basic set 2.5 cm** · extension for basic set · extension length: 25 mm		13595000	46.50
	Required parts: · Basic set iBox universal · Basic set iBox universal with shut-off unit		01800180 01850180	130.80 169.90
 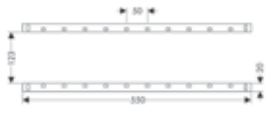	**Fastening rail set for iBox universal**		96615000	33.00
	**Flushing board iControl**	Chrome	15956000	57.80

Measurements within scale drawings are in mm.

Mixer lines



PuraVida	page 255		Metropol	page 269	
Metris	page 303		Talis	page 323	
Focus	page 353		Novus	page 367	
Logis	page 379				

Selected taps at a glance

		Logis	Novus	Focus	Talis S Talis	Talis S
						
Basin mixer						
Standard ComfortZone 70–110	Pillar tap	71120, -000 71121, -000		31130, -000	13132, -000	72017, -000
	With pop-up waste set	71100, -000 71070, -000 71222, -000	71030, -000 71020, -000	31607, -000 31730, -000	32040, -000 32020, -000	72020, -000 72010, -000
	with Push-Open waste set	71107, -000 71077, -000		31604, -000		72011, -000
	Without waste set	71101, -000 71071, -000 71221, -000	71031, -000 71021, -000	31517, -000 31733, -000	32041, -000 32031, -000	72021, -000 72012, -000
	For open water heaters	71074, -000	71036, -000	31132, -000	32032, -000	
	LowFlow	71078, -000	71034, -000 71024, -000	31603, -000 31513, -000 31951, -000 31952, -000		72024, -000 72025, -000 72015, -000 72018, -000
	CoolStart	71102, -000 71103, -000 71072, -000 71073, -000	71032, -000 71022, -000	31621, -000 31539, -000		72022, -000 72023, -000 72013, -000 72014, -000
Taller models ComfortZone 130–260	With pop-up waste set	71090, -000	71123, -000	31531, -000 31608, -000		72031, -000 72115, -000 72113, -000
	with Push-Open waste set				32080, -000	
	Without waste set	71091, -000	71124, -000	31532, -000 31518, -000		72032, -000 72116, -000 72114, -000
With swivel spout	With pop-up waste set	71130, -000	71126, -000	31609, -000	32084, -000 32070, -000	72105, -000
	with Push-Open waste set				32082, -000	
	Without waste set	71131, -000	71128, -000	31519, -000		
Floor standing						
3-hole		71133, -000	71140, -000			
Wall mounting		71220, -000 71225, -000	71127, -000	31923, -000		72110, -000 72111, -000
Bidet						
		71204, -000 71200, -000	71142, -000	31920, -000 31922, -000	32240, -000	72200, -000
Bath						
	Exposed	71400, -000 71243, -000	71040, -000	31940, -000	32440, -000 32420, -000	72400, -000
	concealed	71405, -000	71045, -000	31945, -000	32475, -000	72405, -000
	With safety combination	71407, -000	71046, -000	31946, -000	32477, -000	72406, -000
Floor standing						72412, -000
2-hole						
3-hole		71310, -000				72416, -000
4-hole						72418, -000
Bath filler		71410, -000	71320, -000	13414, -000	13414, -000	72410, -000
Shower						
	Exposed	71600, -000 71263, -000	71060, -000	31960, -000	32640, -000 32620, -000	72600, -000
	concealed	71605, -000 71607, -000	71065, -000	31965, -000	32675, -000	72605, -000 72607, -000

Talis Select S	Talis E	Talis Select E	Metris S	Metris	Metropol with lever handle	Metropol with loop handle	Metropol Select
							
	71706, -000			31166, -000	32501, -000		
72042, -000 72040, -000	71710, -XXX 71700, -000	71750, -000	31060, -000	31080, -000 31088, -000	32506, -000	74506, -000	
	71711, -000 71701, -000				32507, -XXX 32502, -000 32500, -XXX	74507, -000 74502, -000 74500, -000	32571, -000 32570, -000
72043, -000 72041, -000	71712, -XXX 71702, -000	71751, -000	31068, -000	31084, -000 31186, -000			
	71707, -000			31074, -000			
	71715, -000 71705, -000		31063, -000 31015, -000 31016, -000	31203, -000 31204, -000			
	71713, -XXX 71714, -XXX 71703, -000 71704, -000			31121, -000	32508, -000 32503, -000		
72044, -000	71716, -XXX 71754, -XXX	71752, -000	31022, -000	31082, -000 31087, -000 31183, -000			
				31187, -000	32512, -XXX 32511, -XXX	74512, -000 74511, -000	32572, -000
72045, -000	71717, -XXX 71755, -000	71753, -000	31023, -000	31184, -000 31081, -000 31185, -000			
			31159, -000				
			31161, -000				
					32530, -000	74530, -000	
	71733, -XXX				32515, -XXX 32514, -000	74515, -000 74514, -000	
	71732, -000 71734, -XXX		31162, -000 31163, -000	31085, -000 31086, -000	32525, -000 32526, -XXX	74525, -000 74526, -000	
72202, -000	71720, -XXX 71721, -000		31261, -000	31280, -000	32520, -XXX	74520, -000	
	71740, -XXX		31460, -000	31480, -000	32540, -XXX	74540, -000	
	71745, -000		31465, -000	31493, -000 31454, -000	32545, -XXX	74545, -000	
	71474, -000		31466, -000	31487, -000 31451, -000	32546, -XXX	74546, -000	
				31471, -000	32532, -XXX 32531, -000	74532, -000	
					32548, -000	74548, -000	
	71747, -000 71730, -000			31190, -000	32550, -000	74550, -000	
	71748, -XXX		31446, -000 31447, -000	31442, -000	32552, -000	74552, -000	
	71410, -000		14420, -000	31494, -000	32542, -000 32543, -XXX	32543, -000 32542, -000	
	71760, -XXX		31660, -000	31680, -000	32560, -XXX	74560, -000	
	71765, -XXX		31665, -000	31685, -000 31456, -000	32565, -XXX	74565, -000	

Selected taps at a glance

		Metropol Classic	PuraVida
			
Basin mixer			
Standard ComfortZone 70–110	Pillar tap		
	With pop-up waste set	31300, -000, -090	15074, -000, -400
	with Push-Open waste set		15070, -000, -400 15075, -000, -400
	Without waste set	31301, -000, -090	
	For open water heaters		
	LowFlow		
	CoolStart		
Taller models ComfortZone 130–260	With pop-up waste set	31303, -000, -090 31302, -000, -090	
	with Push-Open waste set		15072, -000, -400 15081, -000, -400
	Without waste set		
With swivel spout	With pop-up waste set		
	with Push-Open waste set		
	Without waste set		
Floor standing			
3-hole		31331, -000, -090 31307, -000, -090 31330, -000, -090 31306, -000, -090	15063, -000
Wall mounting			15084, -000, -400 15085, -000, -400
Bidet			
		31320, -000, -090	15270, -000, -400
Bath			
	Exposed	31340, -000, -090	15472, -000, -400
	concealed	31345, -000, -090	15445, -000, -400
	With safety combination		15447, -000, -400
Floor standing		31445, -000, -090	15473, -000, -400
2-hole			
3-hole			15432, -000, -400
4-hole		31441, -000, -090 31449, -000, -090 31315, -000, -090	
Bath filler		13425, -000, -090	15412, -000, -400
Shower			
	Exposed	31360, -000, -090	15672, -000, -400
	concealed	31365, -000, -090	15665, -000, -400

Price

PuraVida®





Basin	page 257		Bidet	page 259	
Bath	page 260		Shower	page 262	
Thermostatic mixers/ valves/ diverters	page 263		Showers and shower holder	page 264	
Overhead showers	page 266		Accessories	page 267	

Possible combinations PuraVida

Basin


no.15072000, -400


no.15081000, -400


no.15070000, -400*


no.15075000, -400


no.15085000, -400*


no.15170000, -400*

Bath


no.15472000, -400


no.15445000, -400*


no.15771000, -400*


no.15473000, -400


no.15432000, -400

Shower


no.15672000, -400


no.15665000, -400*


no.15777000


no.27853000, -400


no.28558000, -400*


no.28557000, -400*


no.27437000, -400*

Accessories


no.41503000


no.41508000


no.41505000


no.01800180

* as an example

Basin

	finish	code no.	Euro



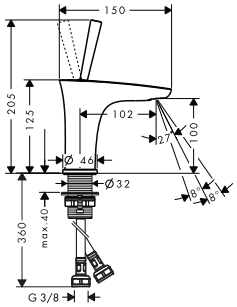

Single lever basin mixer 100 for hand washbasins with push-open waste set
- consists of: single lever basin mixer, waste set
- ComfortZone 100
- projection 102 mm
- laminar spray
- swiveling spray former
- flow rate at 3 bar: 5 l/min
- joystick ceramic cartridge
- suitable for continuous flow water heaters
- push-open waste set G 1¼
- material waste set: metal
- connection dimension: DN15

Chrome 15075000 420.50
White/Chrome 15075400 420.50

Eco Smart · Quick Clean · Comfort Zone



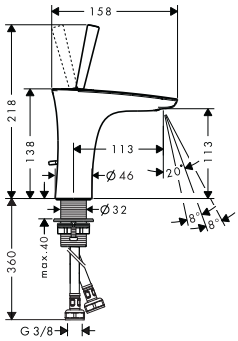

Single lever basin mixer 110 with pop-up waste set
- consists of: single lever basin mixer, waste set
- ComfortZone 110
- projection 113 mm
- laminar spray
- swiveling spray former
- flow rate at 3 bar: 5 l/min
- joystick ceramic cartridge
- suitable for continuous flow water heaters
- pop-up waste set G 1¼
- material waste set: metal
- connection dimension: DN15

Chrome 15074000 435.40
White/Chrome 15074400 435.40

Eco Smart · Quick Clean · Comfort Zone

Alternative products:
- Single lever basin mixer 110 with push-open waste set

Chrome 15070000 435.40
White/Chrome 15070400 435.40



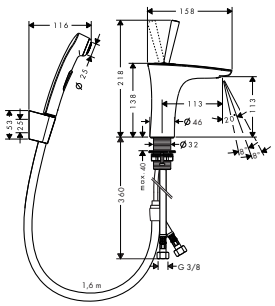

Single lever basin mixer with bidette hand shower and shower hose 160 cm
- consists of: single lever basin mixer, bidette hand shower, shower holder, shower hose, waste set
- ComfortZone 110
- flow rate at 3 bar: 5 l/min
- ceramic cartridge
- temperature limitation adjustable
- suitable for continuous flow water heaters
- push-open waste set G 1¼
- material waste set: metal
- connection dimension: DN15

White/Chrome 15275400 519.60

Air Power · Eco Smart · Quick Clean · Comfort Zone



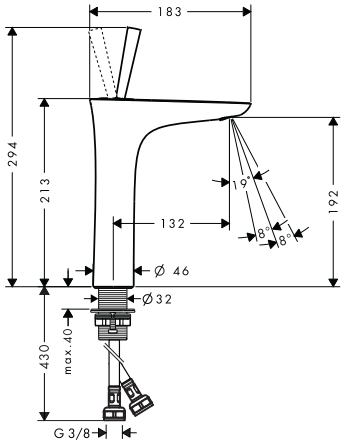

Single lever basin mixer 200 with push-open waste set
- consists of: single lever basin mixer, waste set
- ComfortZone 200
- projection 132 mm
- laminar spray
- swiveling spray former
- flow rate at 3 bar: 5 l/min
- joystick ceramic cartridge
- suitable for continuous flow water heaters
- push-open waste set G 1¼
- material waste set: metal
- connection dimension: DN15

Chrome 15081000 515.20
White/Chrome 15081400 515.20

Eco Smart · Quick Clean · Comfort Zone

Measurements within scale drawings are in mm.

Technical specifications and units of measure are subject to change.

	finish	code no.	Euro



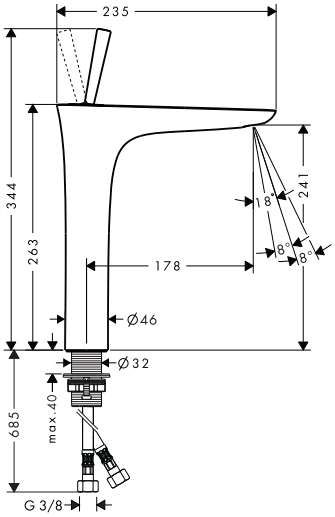

Single lever basin mixer 240 for washbowls with push-open waste set

- consists of: single lever basin mixer, waste set
- ComfortZone 240
- projection 178 mm
- laminar spray
- swiveling spray former
- flow rate at 3 bar: 5 l/ min
- joystick ceramic cartridge
- suitable for continuous flow water heaters
- push-open waste set G 1¼
- material waste set: metal
- connection dimension: DN15

finish	code no.	Euro
Chrome	15072000	668.10
White/Chrome	15072400	668.10

Eco Smart · Quick Clean · Comfort Zone



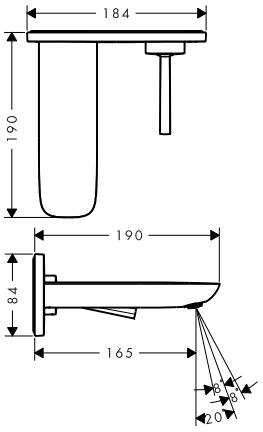

Single lever basin mixer for concealed installation wall-mounted with spout 16.5 cm

- consists of: Single lever basin mixer for concealed installation wall-mounted, waste set
- projection 165 mm
- laminar spray
- swiveling spray former
- flow rate at 3 bar: 5 l/ min
- joystick ceramic cartridge
- suitable for continuous flow water heaters
- non-closing waste set
- material waste set: metal
- connection dimension: DN15
- handle can be positioned on the right or left

finish	code no.	Euro
Chrome	15084000	538.80
White/Chrome	15084400	538.80

Eco Smart · Quick Clean

Alternative sizes:

- Single lever basin mixer for concealed installation wall-mounted with spout 22.5 cm

Chrome	15085000	566.60
White/Chrome	15085400	566.60

Required parts:

- Basic set for single lever basin mixer for concealed installation wall-mounted

	13622180	210.00



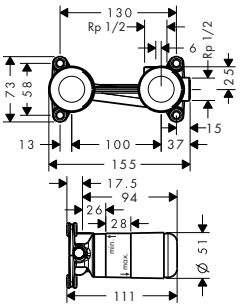

Basic set for single lever basin mixer for concealed installation wall-mounted

- variable positioning of the mixer system, can be left or right of the spout
- connection dimension: DN15

	13622180	210.00

Optional parts:

- Extension set 2.5 cm

	31971000	104.00



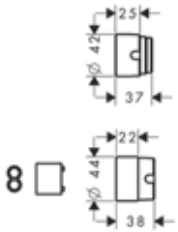

Extension set 2.5 cm

- extension length: 25 mm

	31971000	104.00

Measurements within scale drawings are in mm.

Technical specifications and units of measure are subject to change.

	finish	code no.	Euro



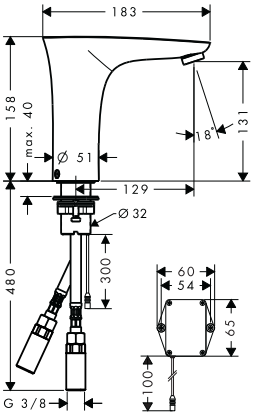

Electronic basin mixer with temperature control battery operation

Chrome 15170000 828.50
White/Chrome 15170400 828.50

Air Power · Eco Smart · Comfort Zone

- ComfortZone 130
- projection 129 mm
- flow rate at 3 bar: 5 l/min
- theft-proof aerator
- temperature limitation adjustable
- temperature adjustable via mixer lever on the side
- non-return valve
- suitable for continous flow water heaters
- infrared sensor technology
- automatic environmental adjustment of infrared sensor
- adjustable optical range of infrared sensor (2 settings)
- battery condition indicator available
- battery operation 6 V (Lithium battery, lifetime approx. 2 years, battery included in scope of delivery)
- hygiene rinse activatable (automatic water flow for 10 seconds every 24 hours following the last operation)
- permanent rinse activatable (single water flow for 180 seconds, suitable for thermal disinfection)
- manual water stop for washbasin cleaning
- performance may be impaired if the sensor is obscured by the design of the wash basin, or when the wash basin is oversized and the distance between sensor and the wash basin edge is larger than 75 mm
- functional restriction due to too large distance
- connection dimension: DN15
- TÜV certified
- dirt filters in the connection hoses
- two filter units with fine filter to protect from incoming dirt, for assembly on existing angle valves, filter element can be removed and cleaned

Alternative products:

- Electronic basin mixer with temperature control mains connection 230 V — Chrome 15172000 863.10

Bidet



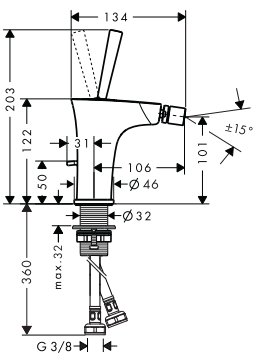

Single lever bidet mixer with pop-up waste set

Chrome 15270000 495.50
White/Chrome 15270400 495.50

- consists of: single lever bidet mixer, waste set
- projection 106 mm
- ball-pivot joint
- laminar spray
- flow rate at 3 bar: 7.2 l/min
- joystick ceramic cartridge
- suitable for continous flow water heaters
- material waste set: metal
- connection dimension: DN15

Measurements within scale drawings are in mm.

Bath

	finish	code no.	Euro
Single lever bath mixer for exposed installation · projection 164 mm · connection type: s-shaped connections · centre distance: 150 ± 12 mm · spray type mixer: normal spray · flow rate for bath spout at 3 bar: 19 l/ min · flow rate of hand shower at 3 bar: 23 l/ min · joystick ceramic cartridge · min. operating pressure: 1 bar · max. operating pressure: 10 bar · with automatic resetting · non-return valve · with silencer · suitable for continous flow water heaters · connection dimension: DN15	Chrome White/Chrome	15472000 15472400	793.10 793.10
Single lever bath mixer floor-standing · consists of: single lever bath mixer floor standing, baton hand shower, shower hose, shower holder · projection 186 mm · connection type: basic set · spray type mixer: normal spray · spray type hand shower: RainAir · flow rate at 3 bar: 20 l/ min · joystick ceramic cartridge · min. operating pressure: 1 bar · max. operating pressure: 10 bar · with automatic resetting · intrinsically safe against backflow · connection dimension: DN15	Chrome White/Chrome	15473000 15473400	2,244.60 2,244.60
Consisting of: · Baton hand shower 120 1jet (# 28558XXX) · Shower hose 125 cm (# 28272XXX)			
Required parts: · Basic set for mixers floor-standing · Sealing foil for basic set bath mixer floor-standing		10452180 96441000	437.90 117.40
Basic set for mixers floor-standing · for mounting on unfinished floor · suitable for single lever bath mixer, single lever basin mixer and bath spout floor-standing · connection dimension: DN15		10452180	437.90
Optional parts: · Sealing foil for basic set bath mixer floor-standing		96441000	117.40
Sealing foil for basic set bath mixer floor-standing		96441000	117.40

	finish	code no.	Euro
 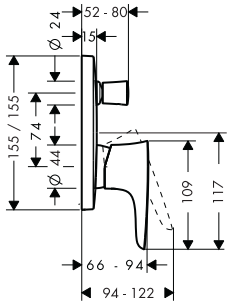			
Single lever bath mixer for concealed installation · connection type: basic set · ceramic cartridge · min. operating pressure: 1 bar · max. operating pressure: 10 bar · temperature limitation adjustable · with automatic resetting	Chrome White/Chrome	15445000 15445400	443.00 443.00
Alternative products:			
· Single lever bath mixer for concealed installation with integrated security combination according to EN1717	Chrome White/Chrome	15447000 15447400	593.20 593.20
Required parts:			
· Basic set iBox universal		01800180	130.80
Optional parts:			
· Extension element	Chrome	15597000	43.00
 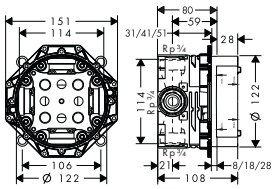			
Basic set iBox universal · connection thread Rp ¾ · suitable for all shower, bath tub and thermostat finish sets for concealed installation · rotationally-symmetric installation · sound-decoupled installation · connection dimension: DN20		01800180	130.80
Alternative products:			
· Basic set iBox universal with shut-off unit		01850180	169.90
Optional parts:			
· Extension iBox universal basic set 2.5 cm		13595000	46.50
· Fastening rail set for iBox universal		96615000	33.00
· Assembly aid for iBox universal		93500000	12.00
NEW			
 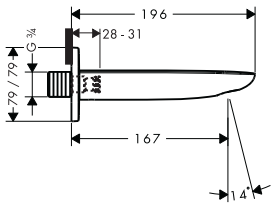			
Bath spout · projection 196 mm · wall-mounted · flow rate: 25 l/ min · connection dimension: DN20 · spray type: normal spray	Chrome White/Chrome	15412000 15412400	289.10 289.10
 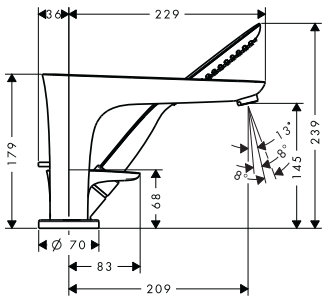			
3-hole rim mounted single lever bath mixer · consists of: 3-hole rim mounted single lever bath mixer, baton hand shower, shower holder, shower hose · projection 229 mm · connection type: basic set · spray type mixer: normal spray · spray type hand shower: RainAir · maximum pull-out length of hand shower: 1.10 m · flow rate at 3 bar: 22 l/ min · ceramic cartridge · min. operating pressure: 1 bar · max. operating pressure: 10 bar · temperature limitation adjustable · non-return valve · connection dimension: DN15	Chrome White/Chrome	15432000 15432400	1,044.00 1,044.00
Consisting of: · Baton hand shower 120 1jet (# 28558XXX)			
Required parts:			
· Basic set for 3-hole rim mounted single lever bath mixer		13437180	653.90

Measurements within scale drawings are in mm.

Technical specifications and units of measure are subject to change.

	finish	code no.	Euro
 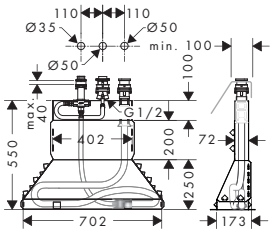	**Basic set for 3-hole rim mounted single lever bath mixer** · consists of: basic set, shower hose, Secubox · maximum pull-out length of hand shower: 1.10 m · connection dimension: DN15		13437180	653.90
	Optional parts:			
	· Secuflex insert extension		98806000	3.70

Shower

 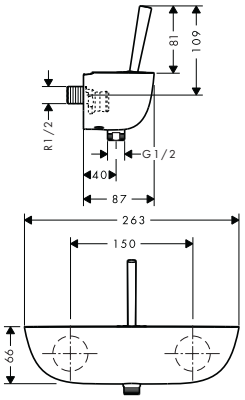	**Single lever shower mixer for exposed installation** · 1 outlet · connection type: s-shaped connections · centre distance: 150 ± 12 mm · flow rate of hand shower at 3 bar: 25 l/ min · joystick ceramic cartridge · min. operating pressure: 1 bar · max. operating pressure: 10 bar · non-return valve · with silencer · hose connection DN15 · connection dimension: DN15	Chrome White/Chrome	15672000 15672400	631.20 631.20
 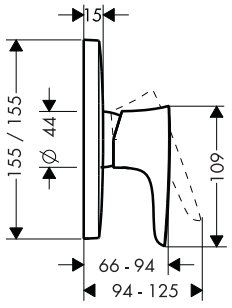	**Single lever shower mixer for concealed installation** · 1 outlet · connection type: basic set · ceramic cartridge · min. operating pressure: 1 bar · max. operating pressure: 10 bar · temperature limitation adjustable	Chrome White/Chrome	15665000 15665400	390.60 390.60
	Required parts:			
	· Basic set iBox universal		01800180	130.80
	Optional parts:			
	· Extension element	Chrome	15597000	43.00
 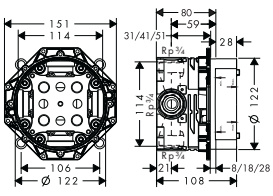	**Basic set iBox universal** · connection thread Rp ¾ · suitable for all shower, bath tub and thermostat finish sets for concealed installation · rotationally-symmetric installation · sound-decoupled installation · connection dimension: DN20		01800180	130.80
	Alternative products:			
	· Basic set iBox universal with shut-off unit		01850180	169.90
	Optional parts:			
	· Extension iBox universal basic set 2.5 cm		13595000	46.50
	· Fastening rail set for iBox universal		96615000	33.00
NEW	· Assembly aid for iBox universal		93500000	12.00

Measurements within scale drawings are in mm.

Technical specifications and units of measure are subject to change.

Thermostatic mixers/ valves/ diverters

	finish	code no.	Euro
 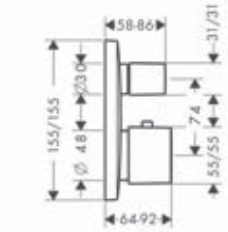 **Thermostat for concealed installation with shut-off/ diverter valve** · 2 outlets · flow rate: 26 l/ min · thermostat cartridge · min. operating pressure: 1 bar · max. operating pressure: 10 bar · safety lock at 40° C · temperature limitation adjustable · connection type: basic set	Chrome White/Chrome	15771000 15771400	1,163.60 1,163.60
Required parts: · Basic set iBox universal		01800180	130.80
Optional parts: · Extension element	Chrome	15597000	43.00
 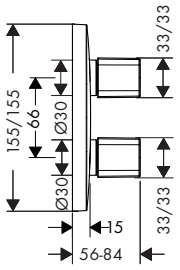 **Shut-off/ diverter valve iControl for concealed installation for 3 functions** · 3 outlets · simultaneous utilization by 3 outlets · connection dimension: DN20	Chrome	15777000	418.80
Required parts: · Basic set iBox universal		01800180	130.80
Optional parts: · Extension element · Extension iBox universal basic set 2.5 cm · Flushing board iControl	Chrome Chrome	15597000 13595000 15956000	43.00 46.50 57.80
 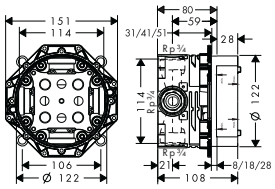 **Basic set iBox universal** · connection thread Rp ¾ · suitable for all shower, bath tub and thermostat finish sets for concealed installation · rotationally-symmetric installation · sound-decoupled installation · connection dimension: DN20		01800180	130.80
Alternative products: · Basic set iBox universal with shut-off unit		01850180	169.90
Optional parts: · Extension iBox universal basic set 2.5 cm · Fastening rail set for iBox universal · Assembly aid for iBox universal		13595000 96615000 93500000	46.50 33.00 12.00
NEW			
 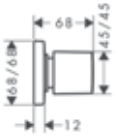 **Shut-off valve for concealed installation** · connection type: DN15/DN20	Chrome White/Chrome	15978000 15978400	142.50 142.50
Required parts: · Basic set 52 l/ min for shut-off valve for concealed installation spindle		15973180	80.60
· Basic set 40 l/ min for shut-off valve for concealed installation ceramic		15974180	83.70
· Basic set 130 l/ min for shut-off valve for concealed installation spindle		15970180	87.50

Measurements within scale drawings are in mm.

	finish	code no.	Euro
 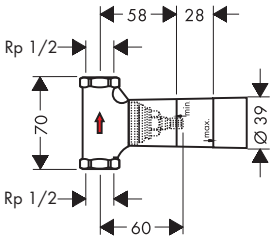			
Basic set 52 l/ min for shut-off valve for concealed installation spindle · connection type: DN15 · suitable for all shut-off valves finish sets · flow rate: 52 l/ min · connection dimension: DN15		15973180	80.60
Alternative products:			
· Basic set 40 l/ min for shut-off valve for concealed installation ceramic		15974180	83.70
· Basic set 130 l/ min for shut-off valve for concealed installation spindle		15970180	87.50
Optional parts:			
· Extension set 2.5 cm		96370000	44.80

Showers and shower holder

 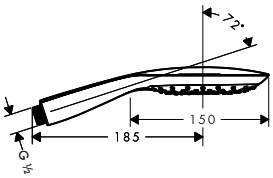			
Hand shower 3jet · hand shower with 2-shell construction · shower head size: 150 mm · convenient diversion via Select button · spray type: RainAir, CaresseAir, Mix · flow rate at 3 bar: 16 l/ min · with internal water conduction · rinseable dirt filter · connection thread G ½ · connection dimension: DN15 · suitable for continous flow water heaters · installation instructions: the hand shower shouldn't be combined with sliders which have two adjustable positions	Chrome White/Chrome	28557000 28557400	163.00 163.00
Water saving EcoSmart version: · Hand shower 3jet EcoSmart 9 l/ min	Chrome White/Chrome	28567000 28567400	167.40 167.40
 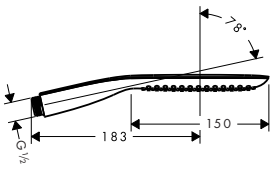			
Baton hand shower 120 1jet · hand shower with 2-shell construction · shower head size: 150 mm · spray type: RainAir · flow rate at 3 bar: 16 l/ min · with internal water conduction · rinseable dirt filter · connection thread G ½ · connection dimension: DN15 · suitable for continous flow water heaters	Chrome White/Chrome	28558000 28558400	102.60 102.60
Water saving EcoSmart version: · Baton hand shower 120 1jet EcoSmart 9 l/ min	Chrome White/Chrome	28568000 28568400	107.40 107.40
 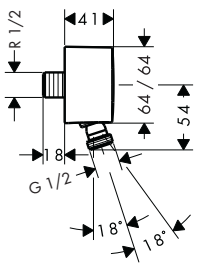			
Wall outlet with non-return valve and pivot joint · ball-joint: shower hose connection with ball joint · plastic connection angle with metal ball joint · non-return valve	Chrome	27414000	39.60

Measurements within scale drawings are in mm.

Technical specifications and units of measure are subject to change.

	finish	code no.	Euro
Wall outlet with non-return valve · plastic connection angle · non-return valve	Chrome	26457000	24.90



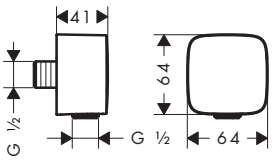

Shower holder Porter S · fixed holding position · for hoses with conical nut	Chrome Stainless Steel Optic	28331000 28331800	23.40 35.00



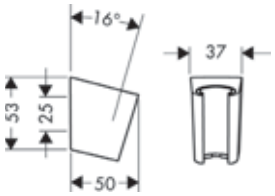

Shower set with shower bar 90 cm — Chrome 27853000 409.90; White/Chrome 27853400 409.90



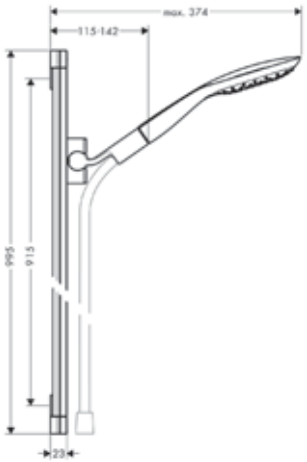









· consists of: hand shower, shower bar, shower hose, slider
· spray type: RainAir, CaresseAir, Mix
· convenient diversion via Select button
· shower head size: 150 mm
· pivot connectors prevent hose from tangling
· 90° position adjustable slider, pivots left and right, up and down
· maximum flow rate at 0.3 MPa: 16 l/min
· chrome-plated wall supports of plastic

Consisting of:
· Hand shower 3jet (# 28557XXX)
· Shower bar PuraVida 90 cm with shower hose (# 27844000)
· Shower hose 160 cm (# 28276XXX)

Optional parts:

· Corner fitting set		28694000	32.30
· Wall bar spacer	Chrome	98993000	7.50

Shower bar PuraVida 90 cm with shower hose · consists of: shower bar, shower hose, slider · wall bar type: flat and slim aluminium profile · fully chrome-plated metal shower slide · self-locking slide · slide inclination angle steplessly adjustable · silent inclination angle adjustment	Chrome	27844000	271.80



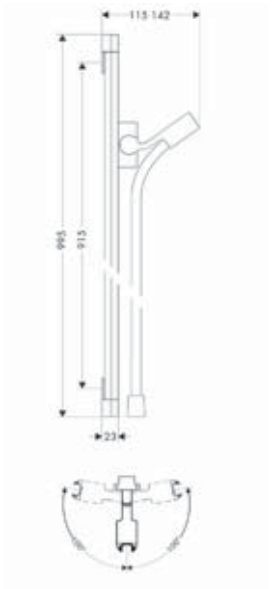

Consisting of:
· Shower hose 160 cm (# 28276XXX)

Optional parts:

· Corner fitting set		28694000	32.30
· Soap dishes Raindance	Chrome	28698000	72.80

Measurements within scale drawings are in mm.

Technical specifications and units of measure are subject to change.

	finish	code no.	Euro
Corner fitting set · material: plastic		28694000	32.30



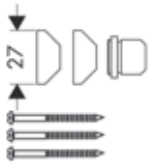

Wall bar spacer · purpose of use: also usable as an extension · material: plastic	Chrome	98993000	7.50



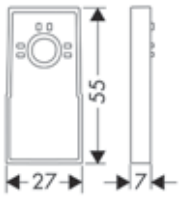

Body showers

Body shower 100 1jet · shower head size: 100 mm · 360° range of rotation · spray type: RainAir · flow rate RainAir spray (at 0.3 MPa): 4.5 l/ min · connection thread: G ½ · connection dimension: DN15	Chrome White/Chrome	28430000 28430400	138.60 138.60

Air Power · Quick Clean · XXL Performance



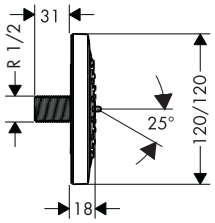

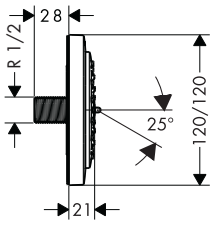

Overhead showers

Overhead shower 400 1jet with ceiling connector · shower head size: 390 x 260 mm · ball-joint: overhead shower angle adjustable · spray type: RainAir · flow rate RainAir spray (at 0.3 MPa): 21 l/ min · spray disc surface in two variants: chrome or white · material spray disc: metal · ceiling connection length: 100 mm · installation: ceiling · connection thread G ½ · connection dimension: DN15	Chrome White/Chrome	27390000 27390400	1,132.40 1,132.40

Air Power · Quick Clean · XXL Performance

Optional parts: · Thermostat for concealed installation with shut-off/ diverter valve	Chrome White/Chrome	15771000 15771400	1,163.60 1,163.60



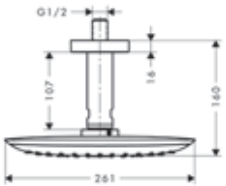

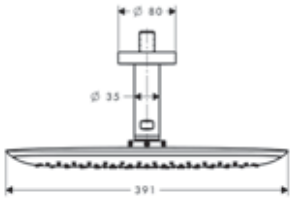

Measurements within scale drawings are in mm.

Technical specifications and units of measure are subject to change.

	finish	code no.	Euro
Overhead shower 400 1jet with shower arm · shower head size: 390 x 260 mm · shower arm length: 390 mm · spray type: RainAir · flow rate RainAir spray (at 0.3 MPa): 21 l/min · spray disc surface in two variants: chrome or white · material spray disc: metal · installation: wall · connection thread G ½ · connection dimension: DN15	Chrome White/Chrome	27437000 27437400	1,221.70 1,221.70
Optional parts: · Thermostat for concealed installation with shut-off/ diverter valve	Chrome White/Chrome	15771000 15771400	1,163.60 1,163.60

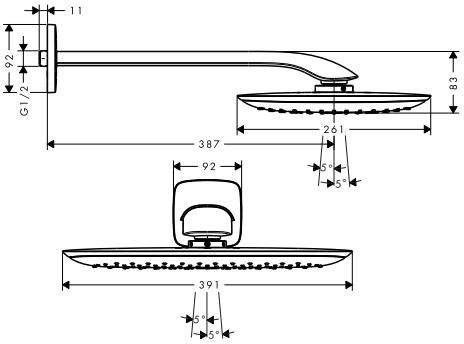

Accessories



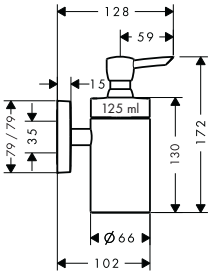

Liquid soap dispenser — Chrome — 41503000 — 135.40
· wall-mounted
· material: brass, ceramic
· filling capacity 125 ml
· dosage 1.5 ml
· material holder: metal



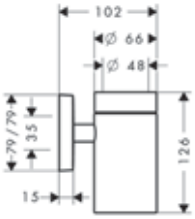

Toothbrush tumbler — Chrome — 41504000 — 100.30
· material: brass, ceramic
· wall-mounted
· material holder: metal



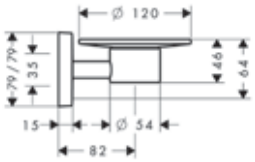

Soap dish — Chrome — 41502000 — 98.80
· material: brass, ceramic
· wall-mounted
· material holder: metal





Towel hook — Chrome — 41501000 — 18.00
· material: brass
· wall-mounted

Measurements within scale drawings are in mm.

Technical specifications and units of measure are subject to change.

	finish	code no.	Euro
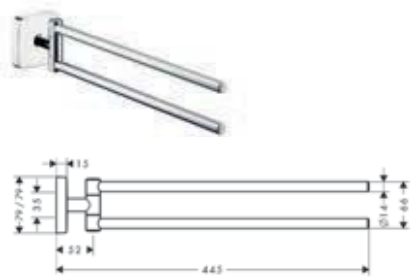 **Towel holder twin-handle** · material: brass · wall-mounted · material holder: metal · length 445 mm · swivelling	Chrome	41512000	117.80
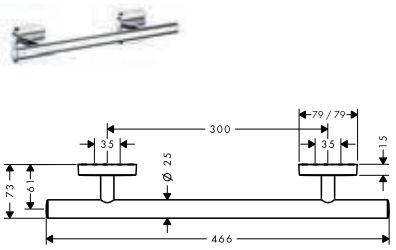 **Grab rail** · drilling distance 300 mm · material: brass · wall-mounted · material holder: metal · length 466 mm · TÜV certified	Chrome	41513000	117.80
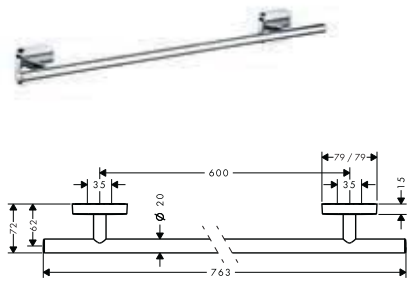 **Bath towel rail** · drilling distance 600 mm · material: brass · wall-mounted · material holder: metal · length 763 mm	Chrome	41506000	135.40
 **Roll holder with cover** · material: brass · wall-mounted · material holder: metal	Chrome	41508000	126.50
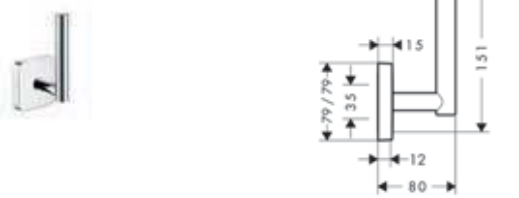 **Spare roll holder** · material: brass · wall-mounted · material holder: metal · for spare rolls	Chrome	41518000	98.80
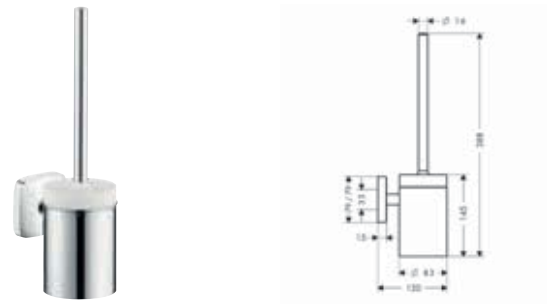 **Toilet brush with tumbler wall-mounted** · material holder: metal · material: brass, ceramic · wall-mounted	Chrome	41505000	161.90

Measurements within scale drawings are in mm.

Technical specifications and units of measure are subject to change.

Metropol®



Metropol page 270



Metropol Classic page 295



Possible combinations Metropol

Basin mixer 260


no.32572000


no.32512000


no.74512000

Basin mixer 230


no.32511000


no.74511000

Basin mixer 110


no.32571000


no.32507000*


no.74507000*

Basin mixer 100


no.32570000


no.32502000*


no.74502000


no.32500000


no.74500000

3-hole basin mixer


no.32515000


no.74515000


no.32514000


no.74514000

2-hole wall-mounted


no.32526000


no.74526000


no.32525000


no.74525000

Floor-standing basin mixer



no.32530000



no.74530000

Floor-standing bath mixer



no.32532000



no.74532000



no.32540000*



no.74540000*



no.32545000*



no.74545000*



no.13151000, -400

Bath



no.32550000*



no.74550000*



no.32552000*



no.74552000*



no.32531000



no.32548000



no.74548000



no.32543000



no.32542000

Shower



no.32560000*



no.74560000*



no.32565000



no.74565000



no.13171000, -400

* as an example

Additional FinishPlus products Metropol

NEW

Hand showers and accessories



Rainfinity®
Hand shower 130 3jet
26864, -000, -140, -340, -670, -700, -990
Hand shower 130 3jet EcoSmart
26865, -000, -140, -340, -670, -700, -990



Rainfinity®
Baton hand shower 100 1jet
26866, -000, -140, -340, -670, -700, -990
Baton hand shower 100 1jet EcoSmart
26867, -000, -140, -340, -670, -700, -990



Raindance® Select E
Hand shower 120 3jet
26520, -000, -140, -340, -400, -670, -700, -990

Raindance® Select S
Hand shower 120 3jet
26530, -000, -140, -340, -400, -670, -700, -990 (not shown)

Hand shower 120 3jet EcoSmart 9 l/min
26531, -000, -140, -340, -400, -670, -700, -990 (not shown)



FixFit®
Wall outlet Square
with non-return valve
26455, -000, -140, -340, -670, -700, -990
Wall outlet E
without non-return valve
27454, -000, -140, -340, -670, -700, -990 (not shown)



Shower holder Porter E
28387, -000, -140, -340, -670, -700, -990



Isiflex®
Shower hose 160 cm
28276, -000, -140, -340, -670, -700, -990

Overhead showers and accessories



Rainfinity®
Overhead shower 360 3jet with wall connector
26234, -000, -140, -340, -670, -700, -990



Rainfinity®
Overhead shower 360 1jet with wall connector
26230, -000, -140, -340, -670, -700, -990



Rainfinity®
Overhead shower 360 1jet
26231, -000, -140, -340, -670, -700, -990



Rainfinity®
Overhead shower 250 1jet
26228, -000, -140, -340, -670, -700, -990
Overhead shower 250 1jet EcoSmart
26229, -000, -140, -340, -670, -700, -990



Raindance® E
Overhead shower 300 1jet with ceiling connector
26250, -000, -140, -340, -670, -700, -990

Overhead shower 300 1jet with shower arm
26238, -000, -140, -340, -670, -700, -990 (not shown)

Croma®
Overhead shower 280 1jet
26220, -000, -140, -340, -670, -700, -990 (not shown)

Overhead shower 280 1jet EcoSmart 9 l/min
26221, -000, -140, -340, -670, -700, -990 (not shown)



Ceiling connector S 10 cm
27393, -000, -140, -340, -670, -700, -990

Ceiling connector S 30 cm
27389, -000, -140, -340, -670, -700, -990 (not shown)

Shower arm square 38.9 cm
27694, -000, -140, -340, -670, -700, -990 (not shown)

Shower arm 38.9 cm
27413, -000, -140, -340, -670, -700, -990 (not shown)

Additional FinishPlus products Metropol

NEW

Shower bars and Showerpipes



Unica®
Shower bar S Puro 65 cm
with shower hose
28632, -000, -140, -340, -670, -700, -990

Shower bar S Puro 90 cm
with shower hose (not shown)
28631, -000, -140, -340, -670, -700, -990



Raindance® Select S
Showerpipe 240 1jet P with thermostat
27633, -000, -140, -340, -670, -700, -990

Croma® Select S
Showerpipe 280 1jet with thermostat
26890, -140, -340, -670, -700, -990 (not shown)

Showerpipe 280 1jet EcoSmart 9 l/min with thermostat
26891, -140, -340, -670, -700, -990 (not shown)

Thermostat for exposed / concealed installation



Ecostat®
Shower thermostat Comfort for exposed installation
13116, -000, -140, -340, -670, -700, -990



Ecostat®
Bath thermostat Comfort for exposed installation
13114, -000, -140, -340, -670, -700, -990



RainSelect®
Thermostat for concealed installation
for 2 functions
15380, -000, -140, -340, -670, -700, -990

Basic set for 2 functions
15310180 (not shown)



RainSelect®
Thermostat for concealed installation
for 4 functions
15382, -000, -140, -340, -670, -700, -990

Basic set for 4 functions
15312180 (not shown)



ShowerSelect®
Thermostat for concealed installation
for 2 functions
15763, -000, -140, -340, -670, -700, -990

ShowerSelect® S
Thermostat for concealed installation
for 2 functions
15743, -000, -140, -340, -670, -700, -990 (not shown)



Ecostat® Square
Thermostat for concealed installation
for 2 functions
15714, -000, -140, -340, -670, -700, -990

Ecostat® S
Thermostat for concealed installation
for 2 functions
15758, -000, -140, -340, -670, -700, -990 (not shown)

Additional FinishPlus products Metropol

NEW

Wastes and overflow



Exafill® S
Finish set bath filler, waste and overflow set
58117, -000, -140, -340, -670, -700, -990



Flexaplus®
Finish set waste and overflow set
58185, -000, -140, -340, -670, -700, -990



Design trap Flowstar S
52105, -000, -140, -340, -670, -700, -990

Waste set push-open
for basin and bidet mixers
50100, -000, -140, -340, -670, -700, -990 (not shown)
Cover
13950, -000, -140, -670, -700, -990 (not shown)



sBox®
Finish set square
28010, -000, -140, -340, -670, -700, -990

Rim and tile mounted bath basic set
13560180 (not shown)

Installation plate for tile mounted installation
28016000 (not shown)

Mounting angle for installation plate
for tile mounted installation
28021000 (not shown)

Kitchen mixers



Metris® Select M71
2-hole single lever kitchen mixer
with pull-out spray
73818, -000, -340, -670, -800



Focus® M41
Single lever kitchen mixer 240
with pull-out spray
31815, -000, -670, -800



Focus® M41
Single lever kitchen mixer 280
with swivel spout
31817, -000, -670, -800



Focus® M41
Single lever kitchen mixer 260
with swivel spout
31820, -000, -670, -800

-000 Chrome
-140 Brushed Bronze
-340 Brushed Black Chrome
-670 Matt Black
-700 Matt White
-990 Polished Gold Optic

Basin



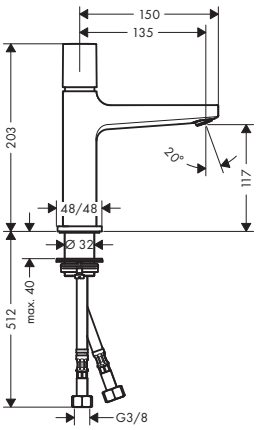

		finish	code no.	Euro
Basin mixer 110 Select with push-open waste set · consists of: Basin mixer, waste set · ComfortZone 110 · projection 135 mm · normal spray · flow rate at 3 bar: 5 l/min · Select cartridge with temperature control · temperature limitation adjustable · suitable for continuous flow water heaters · push-open waste set G 1¼ · material waste set: metal · connection dimension: DN15		Chrome	32571000	305.60



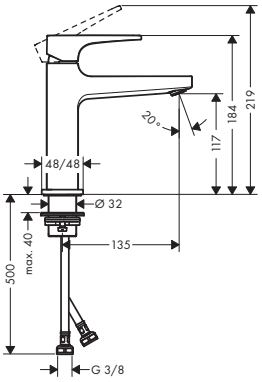

		finish	code no.	Euro
Single lever basin mixer 110 with lever handle and push-open waste set · consists of: single lever basin mixer, waste set · ComfortZone 110 · projection 135 mm · normal spray · flow rate at 3 bar: 5 l/min · ceramic cartridge · temperature limitation adjustable · suitable for continuous flow water heaters · push-open waste set G 1¼ · material waste set: metal · connection dimension: DN15		Chrome	32507000	268.70
	NEW	Brushed Bronze	32507140	403.50
	NEW	Brushed Black	32507340	403.50
		Chrome		
	NEW	Matt Black	32507670	375.80
	NEW	Matt White	32507700	375.80
	NEW	Polished Gold Optic	32507990	403.50
Alternative products:				
· Single lever basin mixer 110 with lever handle and pop-up waste set		Chrome	32506000	263.50
· Single lever basin mixer 110 CoolStart with lever handle and push-open waste set		Chrome	32508000	273.90



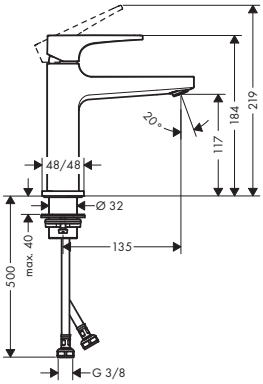

		finish	code no.	Euro
Single lever basin mixer 110 CoolStart with lever handle and push-open waste set · consists of: single lever basin mixer, waste set · ComfortZone 110 · projection 135 mm · normal spray · flow rate at 3 bar: 5 l/min · ceramic cartridge · temperature limitation adjustable · suitable for continuous flow water heaters · push-open waste set G 1¼ · material waste set: metal · connection dimension: DN15 · cold water in middle position		Chrome	32508000	273.90
Alternative products:				
· Single lever basin mixer 110 with lever handle and pop-up waste set		Chrome	32506000	263.50
· Single lever basin mixer 110 with lever handle and push-open waste set		Chrome	32507000	268.70
	NEW	Brushed Bronze	32507140	403.50
	NEW	Brushed Black	32507340	403.50
		Chrome		
	NEW	Matt Black	32507670	375.80
	NEW	Matt White	32507700	375.80
	NEW	Polished Gold Optic	32507990	403.50

Measurements within scale drawings are in mm.

	finish	code no.	Euro



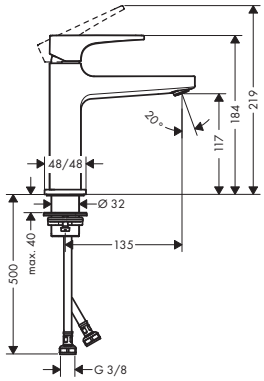

Single lever basin mixer 110 with loop handle and push-open waste set

- consists of: single lever basin mixer, waste set
- ComfortZone 110
- projection 135 mm
- normal spray
- flow rate at 3 bar: 5 l/min
- ceramic cartridge
- temperature limitation adjustable
- suitable for continuous flow water heaters
- push-open waste set G 1¼
- material waste set: metal
- connection dimension: DN15

Chrome — 74507000 — 295.00

Air Power · Eco Smart · Quick Clean · Comfort Zone

Alternative products:

- Single lever basin mixer 110 with loop handle and pop-up waste set — Chrome — 74506000 — 289.80



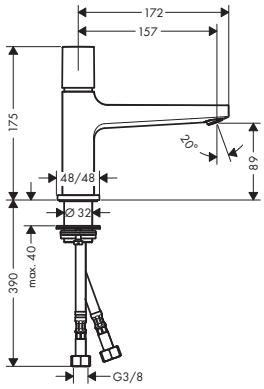

Basin mixer 100 Select with push-open waste set

- consists of: Basin mixer, waste set
- ComfortZone 100
- projection 157 mm
- normal spray
- flow rate at 3 bar: 5 l/min
- Select cartridge with temperature control
- temperature limitation adjustable
- suitable for continuous flow water heaters
- push-open waste set G 1¼
- material waste set: metal
- connection dimension: DN15

Chrome — 32570000 — 295.00

Select · Air Power · Eco Smart · Quick Clean · Comfort Zone



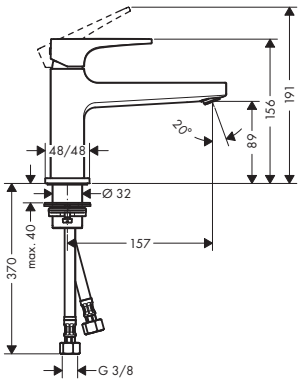

Single lever basin mixer 100 with lever handle and push-open waste set

- consists of: single lever basin mixer, waste set
- ComfortZone 100
- projection 157 mm
- normal spray
- flow rate at 3 bar: 5 l/min
- ceramic cartridge
- temperature limitation adjustable
- suitable for continuous flow water heaters
- push-open waste set G 1¼
- material waste set: metal
- connection dimension: DN15

Chrome — 32502000 — 252.90

Air Power · Eco Smart · Quick Clean · Comfort Zone

Alternative products:

- Single lever basin mixer 100 CoolStart with lever handle and push-open waste set — Chrome — 32503000 — 258.20

Measurements within scale drawings are in mm.

Technical specifications and units of measure are subject to change.

	finish	code no.	Euro



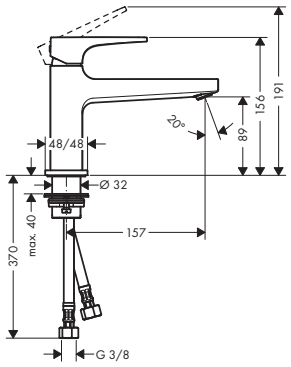

Single lever basin mixer 100 CoolStart with lever handle and push-open waste set

- consists of: single lever basin mixer, waste set
- ComfortZone 100
- projection 157 mm
- normal spray
- flow rate at 3 bar: 5 l/min
- ceramic cartridge
- temperature limitation adjustable
- suitable for continuous flow water heaters
- push-open waste set G 1¼
- material waste set: metal
- connection dimension: DN15
- cold water in middle position

Chrome — 32503000 — 258.20

Air Power · Eco Smart · Quick Clean · Comfort Zone · Cool Start

Alternative products:

- Single lever basin mixer 100 with lever handle and push-open waste set

Chrome — 32502000 — 252.90



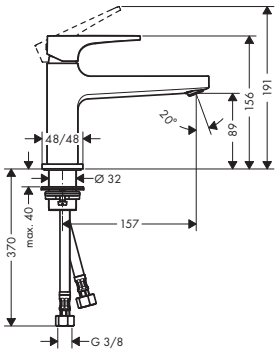

Single lever basin mixer 100 with loop handle and push-open waste set

- consists of: single lever basin mixer, waste set
- ComfortZone 100
- projection 157 mm
- normal spray
- flow rate at 3 bar: 5 l/min
- ceramic cartridge
- temperature limitation adjustable
- suitable for continuous flow water heaters
- push-open waste set G 1¼
- material waste set: metal
- connection dimension: DN15

Chrome — 74502000 — 273.90

Air Power · Eco Smart · Quick Clean · Comfort Zone



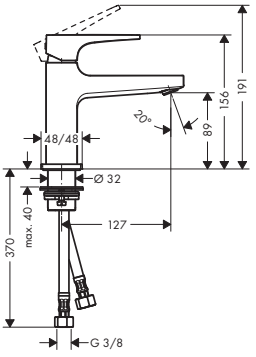

Single lever basin mixer 100 with lever handle for hand washbasins with push-open waste set

- consists of: single lever basin mixer, waste set
- ComfortZone 100
- projection 127 mm
- normal spray
- flow rate at 3 bar: 5 l/min
- ceramic cartridge
- temperature limitation adjustable
- suitable for continuous flow water heaters
- push-open waste set G 1¼
- material waste set: metal
- connection dimension: DN15

	Chrome	32500000	247.60
NEW	Brushed Bronze	32500140	371.70
NEW	Brushed Black	32500340	371.70
	Chrome		
NEW	Matt Black	32500670	347.10
NEW	Matt White	32500700	347.10
NEW	Polished Gold Optic	32500990	371.70

Air Power · Eco Smart · Quick Clean · Comfort Zone

Measurements within scale drawings are in mm.

	finish	code no.	Euro



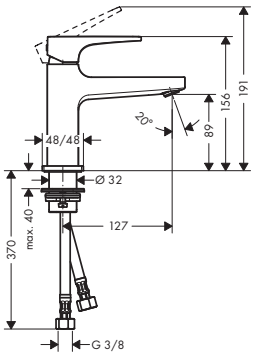

Single lever basin mixer 100 with loop handle for hand washbasins with push-open waste set

- consists of: single lever basin mixer, waste set
- ComfortZone 100
- projection 127 mm
- normal spray
- flow rate at 3 bar: 5 l/min
- ceramic cartridge
- temperature limitation adjustable
- suitable for continuous flow water heaters
- push-open waste set G 1¼
- material waste set: metal
- connection dimension: DN15

Chrome 74500000 268.70

Air Power · Eco Smart · Quick Clean · Comfort Zone



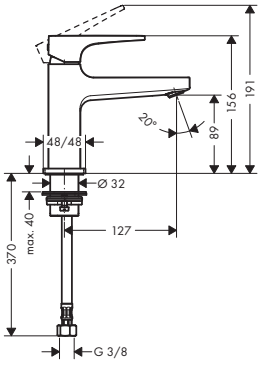

Single lever basin mixer 100 with lever handle for hand washbasins for cold water

- ComfortZone 100
- projection 127 mm
- normal spray
- flow rate at 3 bar: 5 l/min
- ceramic cartridge
- for cold water connection
- connection dimension: DN15

Chrome 32501000 231.80

Air Power · Eco Smart · Quick Clean · Comfort Zone



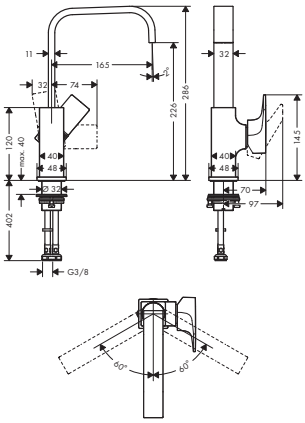

Single lever basin mixer 230 with lever handle and push-open waste set

- consists of: single lever basin mixer, waste set
- ComfortZone 230
- projection 165 mm
- swivel range 120°
- normal spray
- flow rate at 3 bar: 5 l/min
- ceramic cartridge
- temperature limitation adjustable
- suitable for continuous flow water heaters
- push-open waste set G 1¼
- material waste set: metal
- connection dimension: DN15
- handle position on the side: bottom-side at the base body (not suitable for wash bowls)

	Chrome	32511000	368.80
NEW	Brushed Bronze	32511140	553.00
NEW	Brushed Black	32511340	553.00
	Chrome		
NEW	Matt Black	32511670	516.10
NEW	Matt White	32511700	516.10
NEW	Polished Gold Optic	32511990	553.00

Air Power · Eco Smart · Comfort Zone

Measurements within scale drawings are in mm.

Technical specifications and units of measure are subject to change.

	finish	code no.	Euro



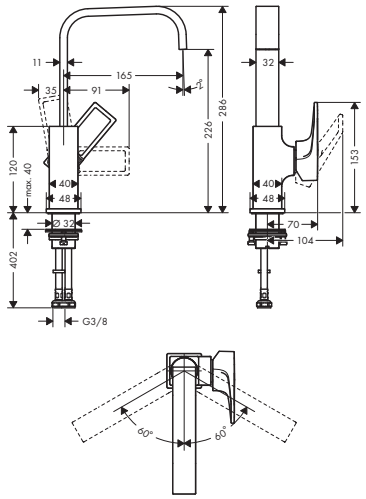

Single lever basin mixer 230 with loop handle and push-open waste set

- consists of: single lever basin mixer, waste set
- ComfortZone 230
- projection 165 mm
- swivel range 120°
- normal spray
- flow rate at 3 bar: 5 l/min
- ceramic cartridge
- temperature limitation adjustable
- suitable for continuous flow water heaters
- push-open waste set G 1¼
- material waste set: metal
- connection dimension: DN15
- handle position on the side: bottom-side at the base body (not suitable for wash bowls)

Chrome	74511000	389.80	

Air Power · Eco Smart · Comfort Zone



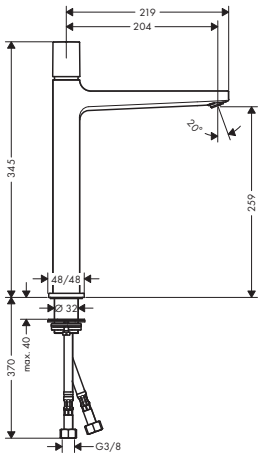

Basin mixer 260 Select with push-open waste set

- consists of: Basin mixer, waste set
- ComfortZone 260
- projection 204 mm
- normal spray
- flow rate at 3 bar: 5 l/min
- Select cartridge with temperature control
- temperature limitation adjustable
- suitable for continuous flow water heaters
- push-open waste set G 1¼
- material waste set: metal
- connection dimension: DN15

Chrome	32572000	421.50	

Select · Air Power · Eco Smart · Quick Clean · Comfort Zone



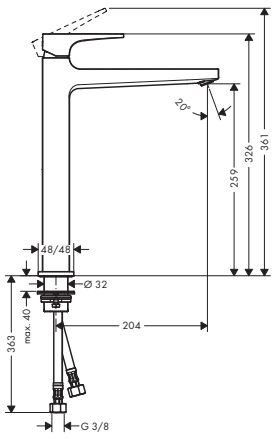

Single lever basin mixer 260 with lever handle for washbowls with push-open waste set

- consists of: single lever basin mixer, waste set
- ComfortZone 260
- projection 204 mm
- normal spray
- flow rate at 3 bar: 5 l/min
- ceramic cartridge
- temperature limitation adjustable
- suitable for continuous flow water heaters
- push-open waste set G 1¼
- material waste set: metal
- connection dimension: DN15

	Chrome	32512000	379.30
NEW	Brushed Bronze	32512140	569.30
NEW	Brushed Black	32512340	569.30
	Chrome		
NEW	Matt Black	32512670	531.50
NEW	Matt White	32512700	531.50
NEW	Polished Gold Optic	32512990	569.30

Air Power · Eco Smart · Quick Clean · Comfort Zone

Measurements within scale drawings are in mm.

	finish	code no.	Euro



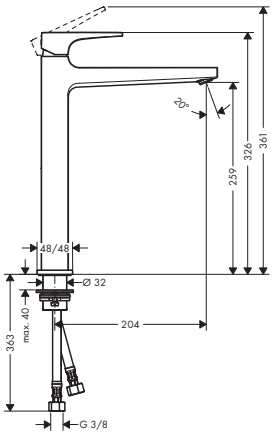

Single lever basin mixer 260 with loop handle for washbowls with push-open waste set
- consists of: single lever basin mixer, waste set
- ComfortZone 260
- projection 204 mm
- normal spray
- flow rate at 3 bar: 5 l/ min
- ceramic cartridge
- temperature limitation adjustable
- suitable for continuous flow water heaters
- push-open waste set G 1¼
- material waste set: metal
- connection dimension: DN15

Chrome 74512000 400.40

Air Power · Eco Smart · Quick Clean · Comfort Zone



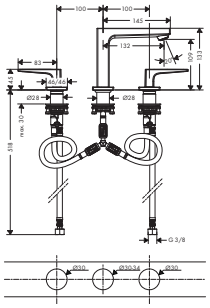

3-hole basin mixer 110 with lever handles and push-open waste set
- consists of: 3-hole basin mixer, waste set
- ComfortZone 110
- projection 132 mm
- flow rate at 3 bar: 5 l/ min
- ceramic valves hot/ cold 90°
- suitable for continuous flow water heaters
- push-open waste set G 1¼
- material waste set: metal
- connection dimension: DN15

Chrome 32514000 353.00

Air Power · Eco Smart · Quick Clean · Comfort Zone



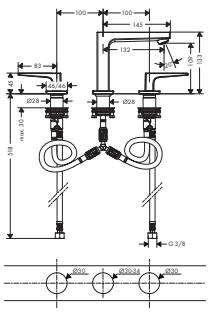

3-hole basin mixer 110 with loop handles and push-open waste set
- consists of: 3-hole basin mixer, waste set
- ComfortZone 110
- projection 132 mm
- flow rate at 3 bar: 5 l/ min
- ceramic valves hot/ cold 90°
- suitable for continuous flow water heaters
- push-open waste set G 1¼
- material waste set: metal
- connection dimension: DN15

Chrome 74514000 374.10

Air Power · Eco Smart · Quick Clean · Comfort Zone



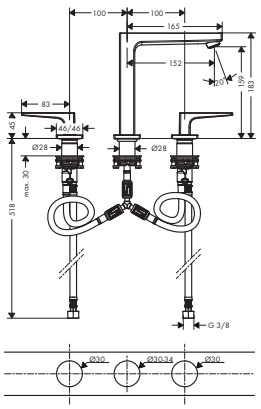

3-hole basin mixer 160 with lever handles and push-open waste set
- consists of: 3-hole basin mixer, waste set
- ComfortZone 160
- projection 152 mm
- flow rate at 3 bar: 5 l/ min
- ceramic valves hot/ cold 90°
- suitable for continuous flow water heaters
- push-open waste set G 1¼
- material waste set: metal
- connection dimension: DN15

	Chrome	32515000	368.80
NEW	Brushed Bronze	32515140	553.00
NEW	Brushed Black Chrome	32515340	553.00
NEW	Matt Black	32515670	516.10
NEW	Matt White	32515700	516.10
NEW	Polished Gold Optic	32515990	553.00

Air Power · Eco Smart · Quick Clean · Comfort Zone



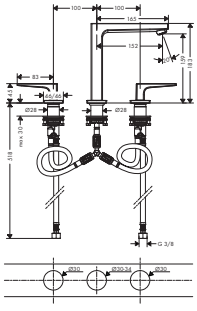

3-hole basin mixer 160 with loop handles and push-open waste set
- consists of: 3-hole basin mixer, waste set
- ComfortZone 160
- projection 152 mm
- flow rate at 3 bar: 5 l/ min
- ceramic valves hot/ cold 90°
- suitable for continuous flow water heaters
- push-open waste set G 1¼
- material waste set: metal
- connection dimension: DN15

Chrome 74515000 389.80

Air Power · Eco Smart · Quick Clean · Comfort Zone

Measurements within scale drawings are in mm.

Technical specifications and units of measure are subject to change.

	finish	code no.	Euro
Single lever basin mixer for concealed installation wall-mounted with lever handle and spout 22.5 cm	Chrome	32526000	337.20
	NEW Brushed Bronze	32526140	505.90
	NEW Brushed Black	32526340	505.90
	Chrome		
	NEW Matt Black	32526670	472.10
	NEW Matt White	32526700	472.10
	NEW Polished Gold Optic	32526990	505.90



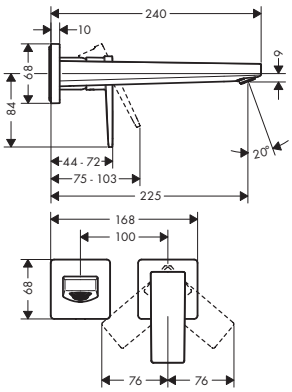

- consists of: Single lever basin mixer for concealed installation wall-mounted, waste set
- projection 225 mm
- normal spray
- flow rate at 3 bar: 5 l/min
- ceramic cartridge
- temperature limitation adjustable
- suitable for continuous flow water heaters
- non-closing waste set
- material waste set: metal
- connection dimension: DN15
- handle can be positioned on the right or left, depends on the basic set installation

Alternative sizes:

· Single lever basin mixer for concealed installation wall-mounted with lever handle and spout 16.5 cm	Chrome	32525000	316.10

Required parts:

· Basic set for single lever basin mixer for concealed installation wall-mounted		13622180	210.00



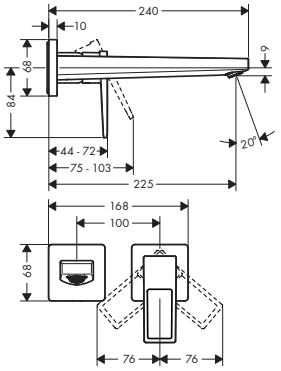

Single lever basin mixer for concealed installation wall-mounted with loop handle and spout 22.5 cm — Chrome — 74526000 — 358.30

- consists of: Single lever basin mixer for concealed installation wall-mounted, waste set
- projection 225 mm
- normal spray
- flow rate at 3 bar: 5 l/min
- ceramic cartridge
- temperature limitation adjustable
- suitable for continuous flow water heaters
- non-closing waste set
- material waste set: metal
- connection dimension: DN15
- handle can be positioned on the right or left, depends on the basic set installation

Alternative sizes:

· Single lever basin mixer for concealed installation wall-mounted with loop handle and spout 16.5 cm	Chrome	74525000	337.20

Required parts:

· Basic set for single lever basin mixer for concealed installation wall-mounted		13622180	210.00



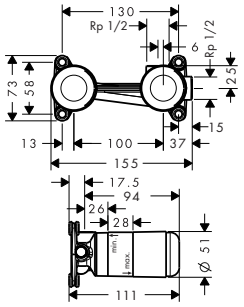

Basic set for single lever basin mixer for concealed installation wall-mounted — 13622180 — 210.00

- variable positioning of the mixer system, can be left or right of the spout
- connection dimension: DN15

Optional parts:

· Extension set 2.5 cm	31971000	104.00

Measurements within scale drawings are in mm.

		finish	code no.	Euro
	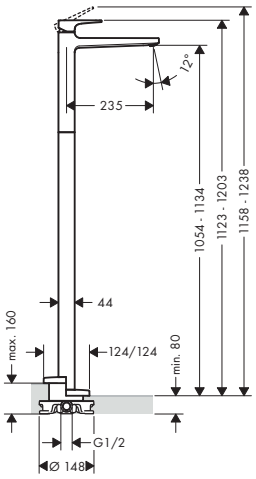	**Single lever basin mixer floor-standing with lever handle without waste set** · projection 235 mm · normal spray · flow rate at 3 bar: 5 l/min · ceramic cartridge · temperature limitation adjustable · suitable for continuous flow water heaters · connection dimension: DN15 **Required parts:** · Basic set for mixers floor-standing **Optional parts:** · Sealing foil for basic set bath mixer floor-standing	Chrome	32530000 10452180 96441000	1,106.40 437.90 117.40
	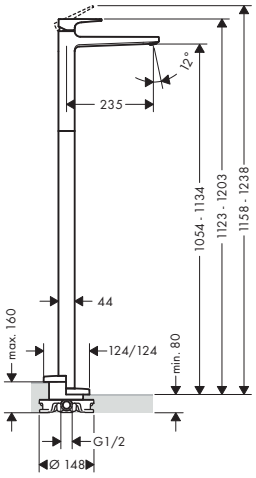	**Single lever basin mixer floor-standing with loop handle without waste set** · projection 235 mm · normal spray · flow rate at 3 bar: 5 l/min · ceramic cartridge · temperature limitation adjustable · suitable for continuous flow water heaters · connection dimension: DN15 **Required parts:** · Basic set for mixers floor-standing **Optional parts:** · Sealing foil for basic set bath mixer floor-standing	Chrome	74530000 10452180 96441000	1,127.40 437.90 117.40
	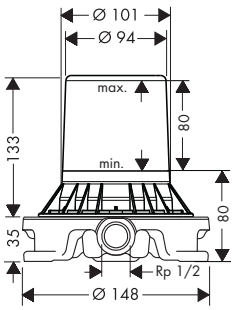	**Basic set for mixers floor-standing** · for mounting on unfinished floor · suitable for single lever bath mixer, single lever basin mixer and bath spout floor-standing · connection dimension: DN15 **Optional parts:** · Sealing foil for basic set bath mixer floor-standing		10452180 96441000	437.90 117.40
	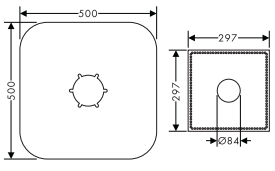	**Sealing foil for basic set bath mixer floor-standing**		96441000	117.40

Measurements within scale drawings are in mm.

Technical specifications and units of measure are subject to change.

Bidet



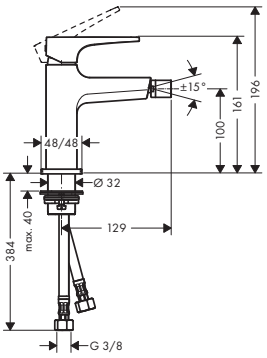

Single lever bidet mixer with lever handle and push-open waste set
- consists of: single lever bidet mixer, waste set
- projection 129 mm
- ball-pivot joint
- laminar spray
- flow rate at 3 bar: 7.2 l/min
- ceramic cartridge
- temperature limitation adjustable
- suitable for continous flow water heaters
- material waste set: metal
- connection dimension: DN15

	finish	code no.	Euro
	Chrome	32520000	347.80
NEW	Brushed Bronze	32520140	521.20
NEW	Brushed Black	32520340	521.20
	Chrome		
NEW	Matt Black	32520670	486.40
NEW	Matt White	32520700	486.40
NEW	Polished Gold Optic	32520990	521.20

Air Power



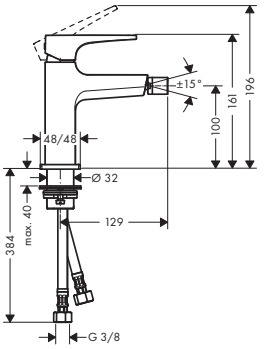

Single lever bidet mixer with loop handle and push-open waste set
- consists of: single lever bidet mixer, waste set
- projection 129 mm
- ball-pivot joint
- laminar spray
- flow rate at 3 bar: 7.2 l/min
- ceramic cartridge
- temperature limitation adjustable
- suitable for continous flow water heaters
- material waste set: metal
- connection dimension: DN15

Chrome 74520000 368.80

Air Power



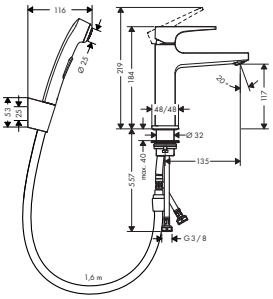

Single lever basin mixer with lever handle with bidette hand shower and shower hose 160 cm
- consists of: single lever basin mixer, bidette hand shower, shower holder, shower hose, waste set
- ComfortZone 110
- projection 135 mm
- flow rate at 3 bar: 5 l/min
- ceramic cartridge
- temperature limitation adjustable
- suitable for continuous flow water heaters
- push-open waste set G 1¼
- material waste set: metal
- connection dimension: DN15

Chrome 32522000 353.00

Air Power · Eco Smart · Quick Clean · Comfort Zone



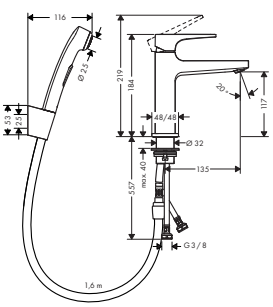

Single lever basin mixer with loop handle with bidette hand shower and shower hose 160 cm
- consists of: single lever basin mixer, bidette hand shower, shower holder, shower hose, waste set
- ComfortZone 110
- projection 135 mm
- flow rate at 3 bar: 5 l/min
- ceramic cartridge
- temperature limitation adjustable
- suitable for continuous flow water heaters
- push-open waste set G 1¼
- material waste set: metal
- connection dimension: DN15

Chrome 74522000 374.10

Air Power · Eco Smart · Quick Clean · Comfort Zone

Measurements within scale drawings are in mm.

Technical specifications and units of measure are subject to change.

Bath

	finish	code no.	Euro
Single lever bath mixer floor-standing with lever handle	Chrome	32532000	1,633.30
	NEW Brushed Bronze	32532140	2,450.40
	NEW Brushed Black Chrome	32532340	2,450.40
	NEW Matt Black	32532670	2,286.60
	NEW Matt White	32532700	2,286.60
	NEW Polished Gold Optic	32532990	2,450.40

Air Power · Quick Clean



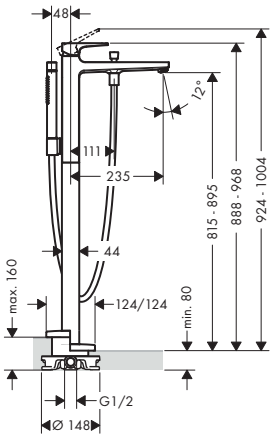

- consists of: single lever bath mixer floor standing, baton hand shower, shower hose, shower holder
- projection 235 mm
- connection type: basic set
- spray type mixer: normal spray
- spray type hand shower: Rain, MonoRain
- flow rate at 3 bar: 21 l/min
- ceramic cartridge
- min. operating pressure: 1 bar
- max. operating pressure: 10 bar
- temperature limitation adjustable
- with automatic resetting
- non-return valve
- connection dimension: DN15

Consisting of:
- Shower hose 125 cm (# 28272XXX)

Required parts:

· Basic set for mixers floor-standing	10452180	437.90

Optional parts:

· Sealing foil for basic set bath mixer floor-standing	96441000	117.40



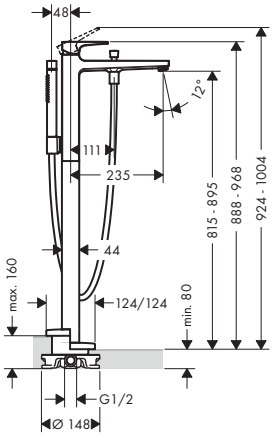

Single lever bath mixer floor-standing with loop handle — Chrome — 74532000 — 1,654.30

Air Power · Quick Clean

- consists of: single lever bath mixer floor standing, baton hand shower, shower hose, shower holder
- projection 235 mm
- connection type: basic set
- spray type mixer: normal spray
- spray type hand shower: Rain, MonoRain
- flow rate at 3 bar: 21 l/min
- ceramic cartridge
- min. operating pressure: 1 bar
- max. operating pressure: 10 bar
- temperature limitation adjustable
- with automatic resetting
- non-return valve
- connection dimension: DN15

Consisting of:
- Shower hose 125 cm (# 28272XXX)

Required parts:

· Basic set for mixers floor-standing	10452180	437.90

Optional parts:

· Sealing foil for basic set bath mixer floor-standing	96441000	117.40



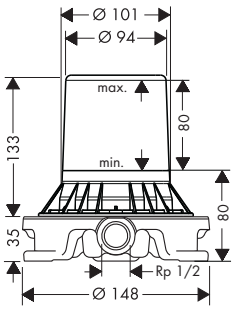

Basic set for mixers floor-standing — 10452180 — 437.90
- for mounting on unfinished floor
- suitable for single lever bath mixer, single lever basin mixer and bath spout floor-standing
- connection dimension: DN15

Optional parts:

· Sealing foil for basic set bath mixer floor-standing	96441000	117.40

Measurements within scale drawings are in mm.

Technical specifications and units of measure are subject to change.

	finish	code no.	Euro
Sealing foil for basic set bath mixer floor-standing		96441000	117.40



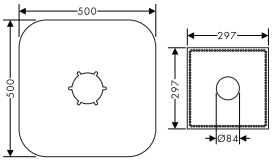



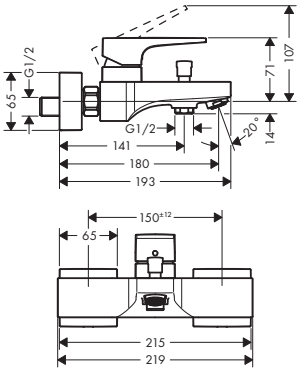

Single lever bath mixer for exposed installation with lever handle
- projection 180 mm
- connection type: s-shaped connections
- centre distance: 150 ± 12 mm
- spray type mixer: normal spray
- flow rate at 3 bar: 22 l/ min
- ceramic cartridge
- min. operating pressure: 1 bar
- max. operating pressure: 10 bar
- temperature limitation adjustable
- with automatic resetting
- intrinsically safe against backflow
- with silencer
- suitable for continous flow water heaters
- connection dimension: DN15

	Chrome	32540000	326.70
NEW	Brushed Bronze	32540140	490.50
NEW	Brushed Black	32540340	490.50
	Chrome		
NEW	Matt Black	32540670	457.70
NEW	Matt White	32540700	457.70
NEW	Polished Gold Optic	32540990	490.50

Air Power | Quick Clean



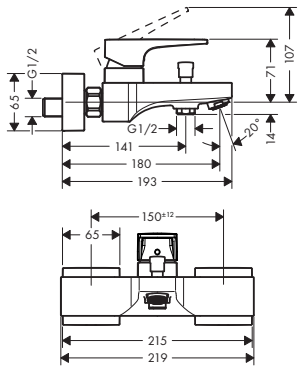

Single lever bath mixer for exposed installation with loop handle — Chrome — 74540000 — 347.80

Air Power | Quick Clean

- projection 180 mm
- connection type: s-shaped connections
- centre distance: 150 ± 12 mm
- spray type mixer: normal spray
- flow rate at 3 bar: 22 l/ min
- ceramic cartridge
- min. operating pressure: 1 bar
- max. operating pressure: 10 bar
- temperature limitation adjustable
- with automatic resetting
- intrinsically safe against backflow
- with silencer
- suitable for continous flow water heaters
- connection dimension: DN15

Measurements within scale drawings are in mm.

		finish	code no.	Euro
 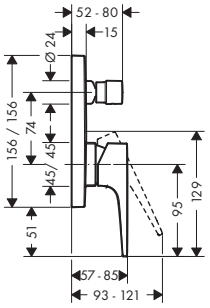	**Single lever bath mixer for concealed installation with lever handle** · connection type: basic set · ceramic cartridge · min. operating pressure: 1 bar · max. operating pressure: 10 bar · temperature limitation adjustable · with automatic resetting · non-return valve · with silencer	Chrome	32545000	221.30
		NEW Brushed Bronze	32545140	331.80
		NEW Brushed Black Chrome	32545340	331.80
		NEW Matt Black	32545670	310.30
		NEW Matt White	32545700	310.30
		NEW Polished Gold Optic	32545990	331.80
	Alternative products: · Single lever bath mixer for concealed installation with lever handle and integrated security combination according to EN1717	Chrome	32546000	316.10
		NEW Brushed Bronze	32546140	474.10
		NEW Brushed Black Chrome	32546340	474.10
		NEW Matt Black	32546670	442.40
		NEW Matt White	32546700	442.40
		NEW Polished Gold Optic	32546990	474.10
	Required parts: · Basic set iBox universal		01800180	130.80
	Optional parts: · Extension element	Chrome	13593000	43.10
 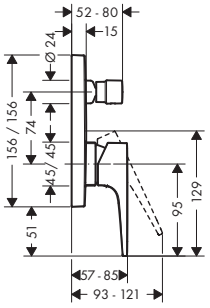	**Single lever bath mixer for concealed installation with loop handle** · connection type: basic set · ceramic cartridge · min. operating pressure: 1 bar · max. operating pressure: 10 bar · temperature limitation adjustable · with automatic resetting · non-return valve · with silencer	Chrome	74545000	242.40
	Alternative products: · Single lever bath mixer for concealed installation with loop handle and integrated security combination according to EN1717	Chrome	74546000	337.20
	Required parts: · Basic set iBox universal		01800180	130.80
	Optional parts: · Extension element	Chrome	13593000	43.10
 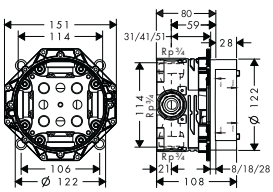	**Basic set iBox universal** · connection thread Rp ¾ · suitable for all shower, bath tub and thermostat finish sets for concealed installation · rotationally-symmetric installation · sound-decoupled installation · connection dimension: DN20		01800180	130.80
	Alternative products: · Basic set iBox universal with shut-off unit		01850180	169.90
	Optional parts:			
	· Extension iBox universal basic set 2.5 cm		13595000	46.50
	· Fastening rail set for iBox universal		96615000	33.00
NEW	· Assembly aid for iBox universal		93500000	12.00

Measurements within scale drawings are in mm.

Technical specifications and units of measure are subject to change.

	finish	code no.	Euro
 			
Extension element · for installation between tiles and finish set · suitable for all shower and bath tub finish sets Ø 150 mm · diameter: 157 mm · extension length: 22 mm	Chrome	13593000	43.10
 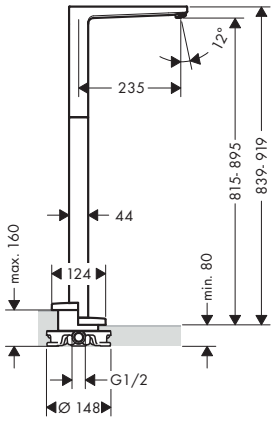			
Bath spout floor-standing · connection type: basic set · projection 235 mm · free-standing installation · flow rate: 20 l/ min · spray type: normal spray	Chrome	32531000	843.00
Required parts: · Basic set for mixers floor-standing		10452180	437.90
Optional parts: · Sealing foil for basic set bath mixer floor-standing		96441000	117.40
 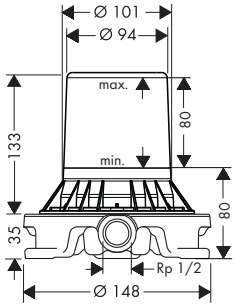			
Basic set for mixers floor-standing · for mounting on unfinished floor · suitable for single lever bath mixer, single lever basin mixer and bath spout floor-standing · connection dimension: DN15		10452180	437.90
Optional parts: · Sealing foil for basic set bath mixer floor-standing		96441000	117.40
 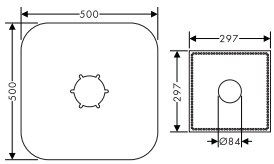			
Sealing foil for basic set bath mixer floor-standing		96441000	117.40
 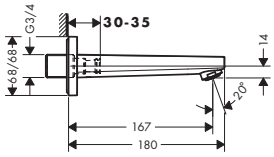			
Bath spout · connection type: G ¾ · projection 167.5 mm · wall-mounted · flow rate: 20 l/ min · spray type: normal spray	Chrome	32542000	210.70

Measurements within scale drawings are in mm.

		finish	code no.	Euro
	**Bath spout** · projection 185 mm · wall-mounted · flow rate: 28 l/min · spray type: wide flood jet	Chrome	32543000	316.10
		NEW Brushed Bronze	32543140	474.10
		NEW Brushed Black	32543340	474.10
		Chrome		
		NEW Matt Black	32543670	442.40
		NEW Matt White	32543700	442.40
		NEW Polished Gold Optic	32543990	474.10
			Air Power	Quick Clean
	**2-hole rim mounted single lever bath mixer with lever handle** · connection type: basic set · ceramic cartridge · min. operating pressure: 1 bar · max. operating pressure: 10 bar · temperature limitation adjustable · connection dimension: DN15	Chrome	32548000	263.50
	Required parts: · Basic set for 2-hole rim mounted bath mixer		13159180	200.00
	**2-hole rim mounted single lever bath mixer with loop handle** · connection type: basic set · ceramic cartridge · min. operating pressure: 1 bar · max. operating pressure: 10 bar · temperature limitation adjustable · connection dimension: DN15	Chrome	74548000	284.50
	Required parts: · Basic set for 2-hole rim mounted bath mixer		13159180	200.00
	**Basic set for 2-hole rim mounted bath mixer** · suitable for remote spout · connection thread: G ½ · connection dimension: DN15 · ceramic cartridge		13159180	200.00
	Optional parts:			
	· Flexible connection tube 80 cm		58192000	104.50
	· Connection tube set for 2-hole rim mounted thermostatic bath mixer		96387000	51.30
	· Rim mounted bath set with hand shower	Chrome	19418000	410.70

Measurements within scale drawings are in mm.

Technical specifications and units of measure are subject to change.

		finish	code no.	Euro
 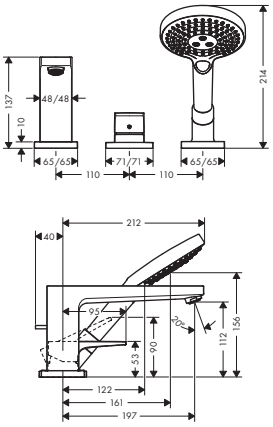	**3-hole rim mounted single lever bath mixer with lever handle and Secuflex** · consists of: 3-hole rim mounted single lever bath mixer, hand shower, shower hose, shower holder · projection 197 mm · connection type: basic set · spray type mixer: normal spray · spray type hand shower: Rain, RainAir, Whirl · maximum pull-out length of hand shower: 1.10 m · flow rate at 3 bar: 22 l/min · ceramic cartridge · min. operating pressure: 1 bar · max. operating pressure: 10 bar · temperature limitation adjustable · connection dimension: DN15 **Consisting of:** · Hand shower 120 3jet (# 26530XXX) **Required parts:** · Basic set for 3-hole rim mounted single lever bath mixer	Chrome	32550000 13437180	632.20 653.90
 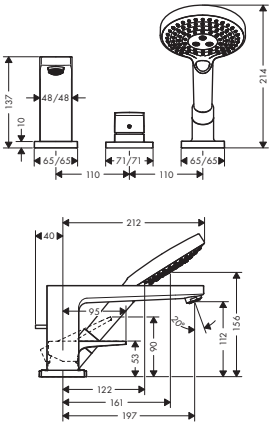	**3-hole rim mounted single lever bath mixer with loop handle and Secuflex** · consists of: 3-hole rim mounted single lever bath mixer, hand shower, shower hose, shower holder · projection 197 mm · connection type: basic set · spray type mixer: normal spray · spray type hand shower: Rain, RainAir, Whirl · maximum pull-out length of hand shower: 1.10 m · flow rate at 3 bar: 22 l/min · ceramic cartridge · min. operating pressure: 1 bar · max. operating pressure: 10 bar · temperature limitation adjustable · connection dimension: DN15 **Consisting of:** · Hand shower 120 3jet (# 26530XXX) **Required parts:** · Basic set for 3-hole rim mounted single lever bath mixer	Chrome	74550000 13437180	653.30 653.90
 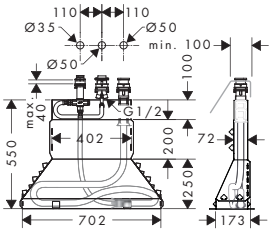	**Basic set for 3-hole rim mounted single lever bath mixer** · consists of: basic set, shower hose, Secubox · maximum pull-out length of hand shower: 1.10 m · connection dimension: DN15 **Optional parts:** · Secuflex insert extension		13437180 98806000	653.90 3.70

Measurements within scale drawings are in mm.

Technical specifications and units of measure are subject to change.

		finish	code no.	Euro
 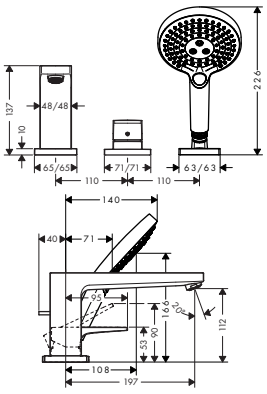	**3-hole rim mounted single lever bath mixer with lever handle** · consists of: 3-hole rim mounted single lever bath mixer, hand shower, shower holder · projection 197 mm · connection type: basic set · spray type mixer: normal spray · spray type hand shower: Rain, RainAir, Whirl · maximum pull-out length of hand shower: 1.10 m · flow rate at 3 bar: 22 l/min · ceramic valves hot/ cold 180° · min. operating pressure: 1 bar · max. operating pressure: 10 bar · temperature limitation adjustable · connection dimension: DN15 **Consisting of:** · Hand shower 120 3jet (# 26530XXX) **Required parts:**	Chrome	32551000 13439180	474.20 333.40
 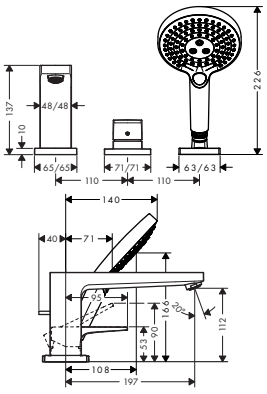	**3-hole rim mounted single lever bath mixer with loop handle** · consists of: 3-hole rim mounted single lever bath mixer, hand shower, shower holder, shower hose · projection 197 mm · connection type: basic set · spray type mixer: normal spray · spray type hand shower: Rain, RainAir, Whirl · maximum pull-out length of hand shower: 1.10 m · flow rate at 3 bar: 22 l/min · ceramic cartridge · min. operating pressure: 1 bar · max. operating pressure: 10 bar · temperature limitation adjustable · connection dimension: DN15 **Consisting of:** · Hand shower 120 3jet (# 26530XXX) **Required parts:**	Chrome	74551000 13439180	495.20 333.40
 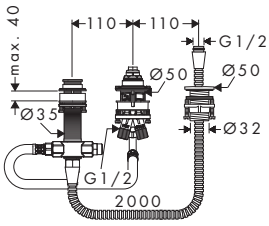	**Basic set for 3-hole rim mounted single lever bath mixer** · consists of: basic set, shower holder, shower hose · maintenance opening required · ceramic cartridge		13439180	333.40

Measurements within scale drawings are in mm.

Technical specifications and units of measure are subject to change.

	finish	code no.	Euro
 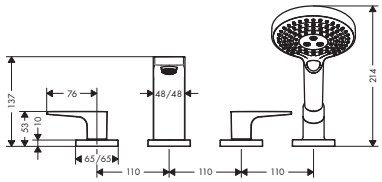 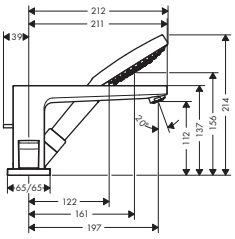	**4-hole rim mounted bath mixer with lever handles and Secuflex** · consists of: 4-hole rim mounted bath mixer, hand shower, shower hose, shower holder · projection 197 mm · connection type: basic set · spray type mixer: normal spray · spray type hand shower: Rain, RainAir, Whirl · maximum pull-out length of hand shower: 1.10 m · flow rate at 3 bar: 22 l/ min · ceramic valves hot/ cold 90° · min. operating pressure: 1 bar · max. operating pressure: 10 bar · connection dimension: DN15 **Consisting of:** · Hand shower 120 3jet (# 26530XXX) **Required parts:**	Chrome	32552000 Air Power Quick Clean	632.20
	· Basic set for 4-hole rim mounted bath mixer		13444180	798.10
 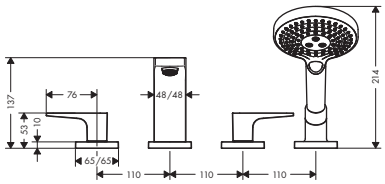 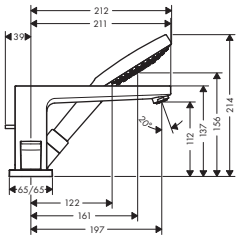	**4-hole rim mounted bath mixer with loop handles and Secuflex** · consists of: 4-hole rim mounted bath mixer, hand shower, shower hose, shower holder · projection 197 mm · connection type: basic set · spray type mixer: normal spray · spray type hand shower: Rain, RainAir, Whirl · maximum pull-out length of hand shower: 1.10 m · flow rate at 3 bar: 22 l/ min · ceramic valves hot/ cold 90° · min. operating pressure: 1 bar · max. operating pressure: 10 bar · connection dimension: DN15 **Consisting of:** · Hand shower 120 3jet (# 26530XXX) **Required parts:**	Chrome	74552000 Air Power Quick Clean	653.30
	· Basic set for 4-hole rim mounted bath mixer		13444180	798.10
 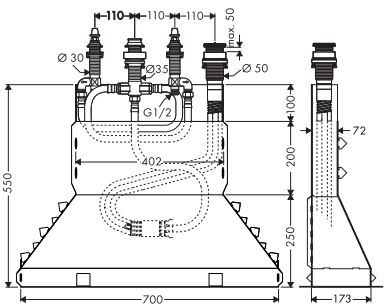	**Basic set for 4-hole rim mounted bath mixer** · consists of: basic set, shower hose, Secubox · maximum pull-out length of hand shower: 1.10 m · connection dimension: DN15 **Optional parts:**		13444180	798.10
	· Secuflex insert extension		98806000	3.70

Measurements within scale drawings are in mm.

Technical specifications and units of measure are subject to change.

	finish	code no.	Euro
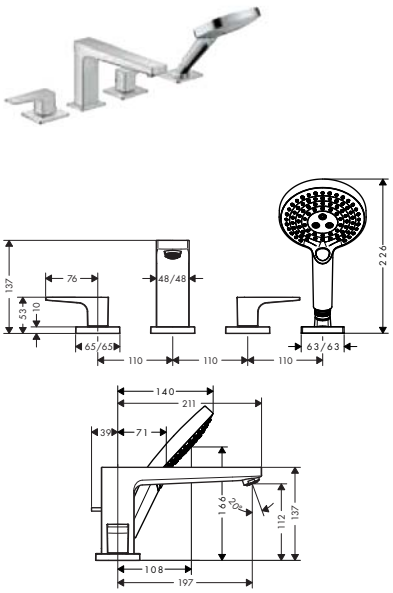	**4-hole rim mounted bath mixer with lever handles** · consists of: 4-hole rim mounted bath mixer, hand shower, shower holder, shower hose · projection 197 mm · connection type: basic set · spray type mixer: normal spray · spray type hand shower: Rain, RainAir, Whirl · maximum pull-out length of hand shower: 1.10 m · flow rate at 3 bar: 22 l/ min · ceramic valves hot/ cold 90° · min. operating pressure: 1 bar · max. operating pressure: 10 bar · connection dimension: DN15	Chrome	32553000	474.20
	Consisting of: · Hand shower 120 3jet (# 26530XXX)			
	Required parts: · Basic set for 4-hole rim mounted bath mixer		13244180	275.20
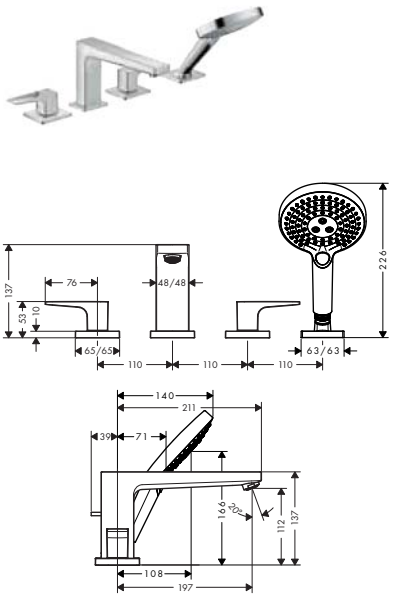	**4-hole rim mounted bath mixer with loop handles** · consists of: 4-hole rim mounted bath mixer, hand shower, shower holder, shower hose · projection 197 mm · connection type: basic set · spray type mixer: normal spray · spray type hand shower: Rain, RainAir, Whirl · flow rate at 3 bar: 22 l/ min · ceramic valves hot/ cold 90° · min. operating pressure: 1 bar · max. operating pressure: 10 bar · connection dimension: DN15	Chrome	74553000	495.20
	Consisting of: · Hand shower 120 3jet (# 26530XXX)			
	Required parts: · Basic set for 4-hole rim mounted bath mixer		13244180	275.20
 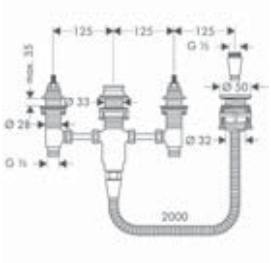	**Basic set for 4-hole rim mounted bath mixer** · consists of: basic set, shower holder, shower hose · maintenance opening required · suitable for 4-hole rim mounted bath mixer · connection thread: G ½ · connection dimension: DN15 · ceramic valves hot/ cold 90°		13244180	275.20

Measurements within scale drawings are in mm.

Technical specifications and units of measure are subject to change.

Shower

	finish	code no.	Euro
Single lever shower mixer for exposed installation with lever handle · connection type: s-shaped connections · centre distance: 150 ± 12 mm · flow rate at 3 bar: 22 l/min · ceramic cartridge · min. operating pressure: 1 bar · max. operating pressure: 10 bar · temperature limitation adjustable · non-return valve · with silencer · hose connection DN15 · connection dimension: DN15	Chrome	32560000	221.30
	NEW Brushed Bronze	32560140	331.80
	NEW Brushed Black Chrome	32560340	331.80
	NEW Matt Black	32560670	309.30
	NEW Matt White	32560700	309.30
	NEW Polished Gold Optic	32560990	331.80
Single lever shower mixer for exposed installation with loop handle · connection type: s-shaped connections · centre distance: 150 ± 12 mm · flow rate at 3 bar: 22 l/min · ceramic cartridge · min. operating pressure: 1 bar · max. operating pressure: 10 bar · temperature limitation adjustable · non-return valve · with silencer · hose connection DN15 · connection dimension: DN15	Chrome	74560000	242.40
Single lever shower mixer for concealed installation with lever handle · 1 outlet · connection type: basic set · ceramic cartridge · min. operating pressure: 1 bar · max. operating pressure: 10 bar · temperature limitation adjustable · with silencer	Chrome	32565000	205.50
	NEW Brushed Bronze	32565140	308.20
	NEW Brushed Black Chrome	32565340	308.20
	NEW Matt Black	32565670	287.70
	NEW Matt White	32565700	287.70
	NEW Polished Gold Optic	32565990	308.20
Required parts: · Basic set iBox universal		01800180	130.80
Optional parts: · Extension element	Chrome	13593000	43.10
Single lever shower mixer for concealed installation with loop handle · connection type: basic set · ceramic cartridge · min. operating pressure: 1 bar · max. operating pressure: 10 bar · temperature limitation adjustable · with silencer	Chrome	74565000	226.50
Required parts: · Basic set iBox universal		01800180	130.80
Optional parts: · Extension element	Chrome	13593000	43.10

Measurements within scale drawings are in mm.

Technical specifications and units of measure are subject to change.

		finish	code no.	Euro
	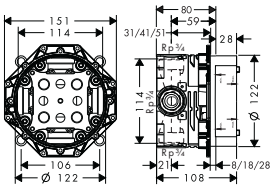	**Basic set iBox universal** · connection thread Rp ¾ · suitable for all shower, bath tub and thermostat finish sets for concealed installation · rotationally-symmetric installation · sound-decoupled installation · connection dimension: DN20		01800180	130.80
		Alternative products: · Basic set iBox universal with shut-off unit		01850180	169.90
	NEW	**Optional parts:** · Extension iBox universal basic set 2.5 cm · Fastening rail set for iBox universal · Assembly aid for iBox universal		13595000 96615000 93500000	46.50 33.00 12.00
		**Extension element** · for installation between tiles and finish set · suitable for all shower and bath tub finish sets Ø 150 mm · diameter: 157 mm · extension length: 22 mm	Chrome	13593000	43.10

Measurements within scale drawings are in mm.

Technical specifications and units of measure are subject to change.

Possible combinations Metropol Classic

Basin


31303000, -090


31302000, -090


31300000, -090*


31330000, -090


31306000, -090


31331000, -090


31307000, -090

Bath


31340000, -090


31345000, -090


31441000, -090


31315000, -090


31449000, -090


31445000, -090

Shower


31360000, -090


31365000, -090


28548000, -090


27424000, -090


27841000, -090*

Accessories


no.01800180

* as an example

Basin

	finish	code no.	Euro
Single lever basin mixer 110 with lever handle and pop-up waste set	Chrome	31300000	348.00
	Chrome/Gold Optic	31300090	435.00



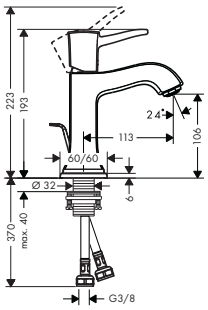

- consists of: single lever basin mixer, waste set
- ComfortZone 110
- projection 113 mm
- normal spray
- flow rate at 3 bar: 5 l/ min
- ceramic cartridge
- temperature limitation adjustable
- suitable for continuous flow water heaters
- pop-up waste set G 1¼
- material waste set: metal
- connection dimension: DN15

Alternative products:

· Single lever basin mixer 110 with lever handle without waste set	Chrome	31301000	348.00
	Chrome/Gold Optic	31301090	435.00

Single lever basin mixer 160 with lever handle for washbowls with pop-up waste set	Chrome	31302000	369.80
	Chrome/Gold Optic	31302090	462.10



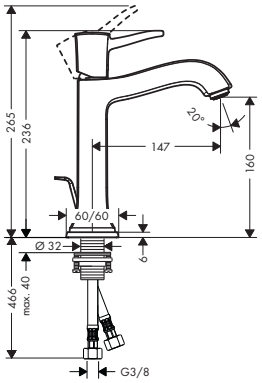

- consists of: single lever basin mixer, waste set
- ComfortZone 160
- projection 147 mm
- normal spray
- flow rate at 3 bar: 5 l/ min
- ceramic cartridge
- temperature limitation adjustable
- suitable for continuous flow water heaters
- pop-up waste set G 1¼
- material waste set: metal
- connection dimension: DN15

Single lever basin mixer 260 with lever handle for washbowls with pop-up waste set	Chrome	31303000	435.00
	Chrome/Gold Optic	31303090	543.70



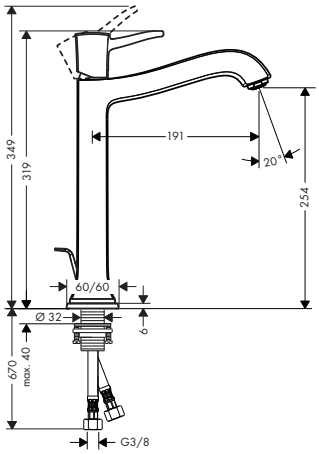

- consists of: single lever basin mixer, waste set
- ComfortZone 260
- projection 191 mm
- normal spray
- flow rate at 3 bar: 5 l/ min
- ceramic cartridge
- temperature limitation adjustable
- suitable for continuous flow water heaters
- pop-up waste set G 1¼
- material waste set: metal
- connection dimension: DN15

3-hole basin mixer 110 with lever handles and pop-up waste set	Chrome	31330000	478.50
	Chrome/Gold Optic	31330090	598.10



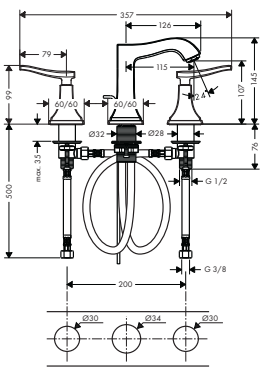

- consists of: 3-hole basin mixer, waste set
- ComfortZone 110
- projection 115 mm
- normal spray
- flow rate at 3 bar: 5 l/ min
- ceramic valves hot/ cold 90°
- temperature limitation adjustable
- suitable for continuous flow water heaters
- pop-up waste set G 1¼
- material waste set: metal
- connection dimension: DN15

Measurements within scale drawings are in mm.

Technical specifications and units of measure are subject to change.

	finish	code no.	Euro
3-hole basin mixer 110 with cross handles and pop-up waste set	Chrome	31306000	522.00
· consists of: 3-hole basin mixer, waste set · ComfortZone 110 · projection 115 mm · normal spray · flow rate at 3 bar: 5 l/min · ceramic valves hot/ cold 90° · temperature limitation adjustable · suitable for continuous flow water heaters · pop-up waste set G 1¼ · material waste set: metal · connection dimension: DN15	Chrome/Gold Optic	31306090	652.50
	Air Power · Eco Smart · Quick Clean · Comfort Zone		
3-hole basin mixer 160 with lever handles and pop-up waste set	Chrome	31331000	500.20
· consists of: 3-hole basin mixer, waste set · ComfortZone 160 · projection 147 mm · normal spray · flow rate at 3 bar: 5 l/min · ceramic valves hot/ cold 90° · temperature limitation adjustable · suitable for continuous flow water heaters · pop-up waste set G 1¼ · material waste set: metal · connection dimension: DN15	Chrome/Gold Optic	31331090	625.30
	Air Power · Eco Smart · Quick Clean · Comfort Zone		
3-hole basin mixer 160 with cross handles and pop-up waste set	Chrome	31307000	543.70
· consists of: 3-hole basin mixer, waste set · ComfortZone 160 · projection 147 mm · normal spray · flow rate at 3 bar: 5 l/min · ceramic valves hot/ cold 90° · temperature limitation adjustable · suitable for continuous flow water heaters · pop-up waste set G 1¼ · material waste set: metal · connection dimension: DN15	Chrome/Gold Optic	31307090	679.60
	Air Power · Eco Smart · Quick Clean · Comfort Zone		

Bidet

	finish	code no.	Euro
Single lever bidet mixer with lever handle and pop-up waste set	Chrome	31320000	380.60
· consists of: single lever bidet mixer, waste set · projection 112 mm · aerator with ball pivot · normal spray · flow rate at 3 bar: 5 l/min · ceramic cartridge · temperature limitation adjustable · suitable for continous flow water heaters · material waste set: metal · connection dimension: DN15	Chrome/Gold Optic	31320090	478.50
	Air Power · Eco Smart · Quick Clean		

Measurements within scale drawings are in mm.

Technical specifications and units of measure are subject to change.

Bath

	finish	code no.	Euro
 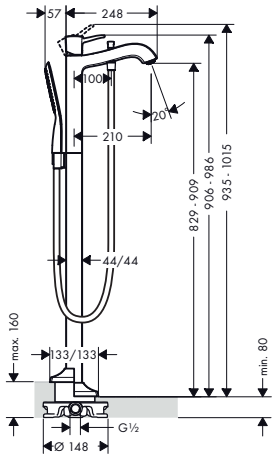	**Single lever bath mixer floor-standing with lever handle** · consists of: single lever bath mixer floor standing, baton hand shower, shower hose, shower holder · projection 210 mm · connection type: basic set · spray type mixer: normal spray · spray type hand shower: RainAir · flow rate at 3 bar: 20 l/ min · ceramic cartridge · min. operating pressure: 1 bar · max. operating pressure: 10 bar · temperature limitation adjustable · with automatic resetting · intrinsically safe against backflow · connection dimension: DN15	Chrome Chrome/Gold Optic	31445000 31445090	1,794.30 2,283.60
	Consisting of: · Baton hand shower 120 1jet (# 28558XXX) · Shower hose 125 cm (# 28272XXX)			
	Required parts: · Basic set for mixers floor-standing · Sealing foil for basic set bath mixer floor-standing		10452180 96441000	437.90 117.40
 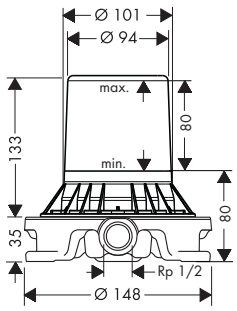	**Basic set for mixers floor-standing** · for mounting on unfinished floor · suitable for single lever bath mixer, single lever basin mixer and bath spout floor-standing · connection dimension: DN15		10452180	437.90
	Optional parts: · Sealing foil for basic set bath mixer floor-standing		96441000	117.40
 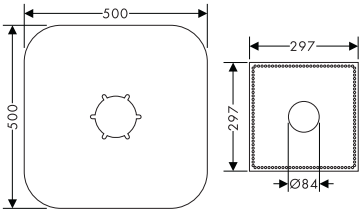	**Sealing foil for basic set bath mixer floor-standing**		96441000	117.40
 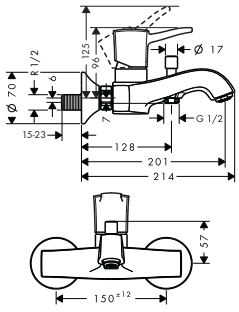	**Single lever bath mixer for exposed installation with lever handle** · projection 201 - 214 mm · connection type: s-shaped connections · centre distance: 150 ± 12 mm · spray type mixer: normal spray · flow rate at 3 bar: 22 l/ min · ceramic cartridge · min. operating pressure: 1 bar · max. operating pressure: 10 bar · temperature limitation adjustable · with automatic resetting · intrinsically safe against backflow · with silencer · suitable for continous flow water heaters · connection dimension: DN15	Chrome Chrome/Gold Optic	31340000 31340090	456.70 570.90

Measurements within scale drawings are in mm.

Technical specifications and units of measure are subject to change.

	finish	code no.	Euro
 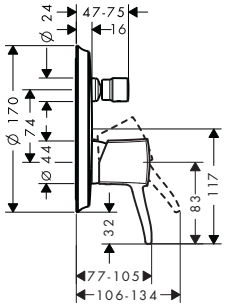			
Single lever bath mixer for concealed installation with lever handle · connection type: basic set · ceramic cartridge · min. operating pressure: 1 bar · max. operating pressure: 10 bar · temperature limitation adjustable · with automatic resetting · with silencer	Chrome Chrome/Gold Optic	31345000 31345090	309.90 391.50
Required parts: · Basic set iBox universal		01800180	130.80
Optional parts: · Extension element 17 cm	Chrome	13596000	44.10
 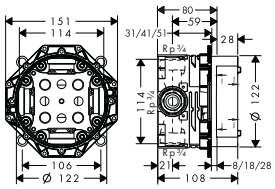			
Basic set iBox universal · connection thread Rp ¾ · suitable for all shower, bath tub and thermostat finish sets for concealed installation · rotationally-symmetric installation · sound-decoupled installation · connection dimension: DN20		01800180	130.80
Alternative products: · Basic set iBox universal with shut-off unit		01850180	169.90
Optional parts: · Extension iBox universal basic set 2.5 cm · Fastening rail set for iBox universal · Assembly aid for iBox universal		13595000 96615000 93500000	46.50 33.00 12.00
NEW			
 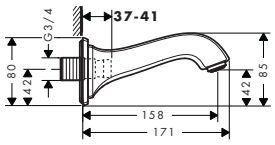			
Bath spout · projection 158 mm · wall-mounted · flow rate: 25 l/ min · spray type: normal spray	Chrome Chrome/Gold Optic	13425000 13425090	179.40 228.40
			Air Power · Quick Clean
 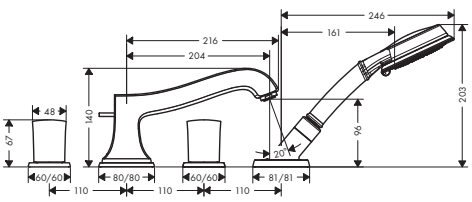			
4-hole rim mounted bath mixer with zero handles · consists of: 4-hole rim mounted bath mixer, hand shower, shower hose, shower holder · projection 204 mm · connection type: basic set · flow rate at 3 bar: 22 l/ min · ceramic valves hot/ cold 180° · with automatic resetting · non-return valve · connection dimension: DN15	Chrome Chrome/Gold Optic	31315000 31315090	603.60 761.20
			Air Power · Quick Clean
Consisting of: · Hand shower 100 3jet (# 28548XXX)			
Required parts: · Basic set for 4-hole rim mounted bath mixer		13444180	798.10

Measurements within scale drawings are in mm.

	finish	code no.	Euro



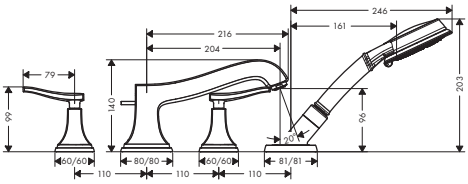

4-hole rim mounted bath mixer with lever handles
- consists of: 4-hole rim mounted bath mixer, hand shower, shower hose, shower holder
- projection 204 mm
- connection type: basic set
- flow rate at 3 bar: 22 l/ min
- ceramic valves hot/ cold 180°
- with automatic resetting
- non-return valve
- connection dimension: DN15

Consisting of:
- Hand shower 100 3jet (# 28548XXX)

Required parts:
- Basic set for 4-hole rim mounted bath mixer

Chrome	31441000	663.40
Chrome/Gold Optic	31441090	831.90
	13444180	798.10



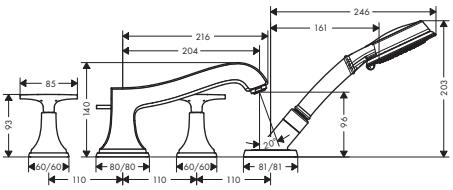

4-hole rim mounted bath mixer with cross handles
- consists of: 4-hole rim mounted bath mixer, hand shower, shower hose, shower holder
- projection 204 mm
- connection type: basic set
- flow rate at 3 bar: 22 l/ min
- ceramic valves hot/ cold 180°
- with automatic resetting
- non-return valve
- connection dimension: DN15

Consisting of:
- Hand shower 100 3jet (# 28548XXX)

Required parts:
- Basic set for 4-hole rim mounted bath mixer

Chrome	31449000	724.20
Chrome/Gold Optic	31449090	908.00
	13444180	798.10



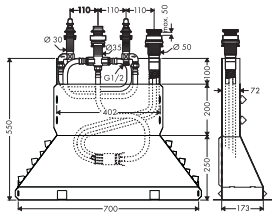

Basic set for 4-hole rim mounted bath mixer
- consists of: basic set, shower hose, Secubox
- maximum pull-out length of hand shower: 1.10 m
- connection dimension: DN15

Optional parts:
- Secuflex insert extension

	13444180	798.10
	98806000	3.70

Shower



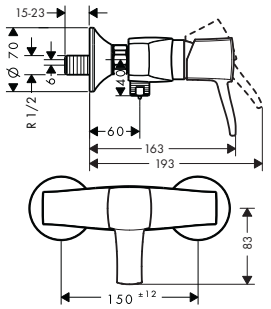

Single lever shower mixer for exposed installation with lever handle
- 1 outlet
- connection type: s-shaped connections
- centre distance: 150 ± 12 mm
- flow rate at 3 bar: 22 l/ min
- ceramic cartridge
- min. operating pressure: 1 bar
- max. operating pressure: 10 bar
- temperature limitation adjustable
- non-return valve
- with silencer
- hose connection DN15
- connection dimension: DN15

Chrome	31360000	348.00
Chrome/Gold Optic	31360090	435.00

Measurements within scale drawings are in mm.

Technical specifications and units of measure are subject to change.

	finish	code no.	Euro
Single lever shower mixer for concealed installation with lever handle	Chrome	31365000	277.30
	Chrome/Gold Optic	31365090	348.00



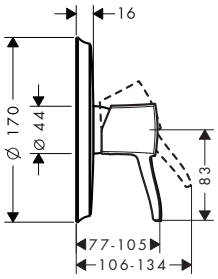

- 1 outlet
- connection type: basic set
- ceramic cartridge
- min. operating pressure: 1 bar
- max. operating pressure: 10 bar
- temperature limitation adjustable

Required parts:

· Basic set iBox universal		01800180	130.80

Optional parts:

· Extension element 17 cm	Chrome	13596000	44.10



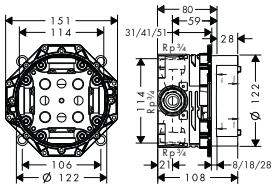

NEW

Basic set iBox universal 01800180 130.80

- connection thread Rp ¾
- suitable for all shower, bath tub and thermostat finish sets for concealed installation
- rotationally-symmetric installation
- sound-decoupled installation
- connection dimension: DN20

Alternative products:

· Basic set iBox universal with shut-off unit	01850180	169.90

Optional parts:

· Extension iBox universal basic set 2.5 cm	13595000	46.50
· Fastening rail set for iBox universal	96615000	33.00
· Assembly aid for iBox universal	93500000	12.00

Measurements within scale drawings are in mm.

Technical specifications and units of measure are subject to change.

Metris®



Metris page 304



Metris S page 315



Possible combinations Metris

Basin


no.31082000*


no.31087000*


no.31183000*


no.31080000*


no.31088000*


no.31086000*

Bath


no.31480000


no.31454000*


no.13151000, -400


no.31471000


no.15763000


no.15708000


no.31190000


no.31442000

Shower


no.31680000


no.31456000*


no.13171000, -400


no.27648000, -400*


no.27361000*


no.15762000


no.15707000


no.28557000, -400*


no.26238000*

Accessories


no.40514000


no.40523000


no.40522000


no.01800180

* as an example

Basin

	finish	code no.	Euro
Single lever basin mixer 100 for hand washbasins with pop-up waste set · consists of: single lever basin mixer, waste set · ComfortZone 100 · projection 89 mm · normal spray · flow rate at 3 bar: 5 l/min · ceramic cartridge · temperature limitation adjustable · suitable for continuous flow water heaters · pop-up waste set G 1¼ · material waste set: metal · connection dimension: DN15	Chrome	31088000	216.70
Alternative products: · Single lever basin mixer 100 for hand washbasins without waste set	Chrome	31186000	209.70



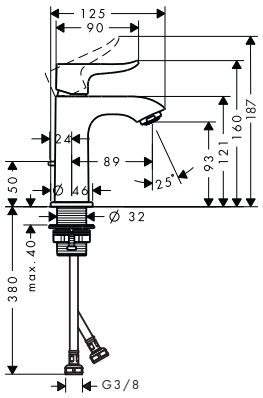

	finish	code no.	Euro
Single lever basin mixer 110 with pop-up waste set · consists of: single lever basin mixer, waste set · ComfortZone 110 · projection 116 mm · normal spray · flow rate at 3 bar: 5 l/min · ceramic cartridge · temperature limitation adjustable · suitable for continuous flow water heaters · pop-up waste set G 1¼ · material waste set: metal · connection dimension: DN15	Chrome	31080000	230.00
Alternative products:			
· Single lever basin mixer 110 without waste set	Chrome	31084000	223.30
· Single lever basin mixer 110 LowFlow with pop-up waste set	Chrome	31203000	234.10
· Single lever basin mixer 110 LowFlow without waste set	Chrome	31204000	228.50
· Single lever basin mixer 110 for vented hot water cylinders with pop-up waste set	Chrome	31074000	334.10



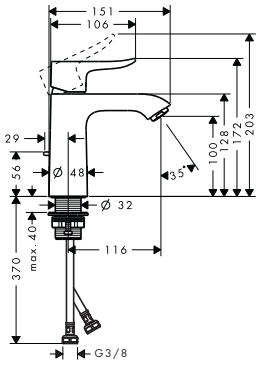

	finish	code no.	Euro
Single lever basin mixer with bidette hand shower and shower hose 160 cm · consists of: single lever basin mixer, bidette hand shower, shower holder, shower hose, waste set · ComfortZone 110 · flow rate at 3 bar: 5 l/min · ceramic cartridge · temperature limitation adjustable · suitable for continuous flow water heaters · push-open waste set G 1¼ · material waste set: metal · connection dimension: DN15	Chrome	31285000	287.10



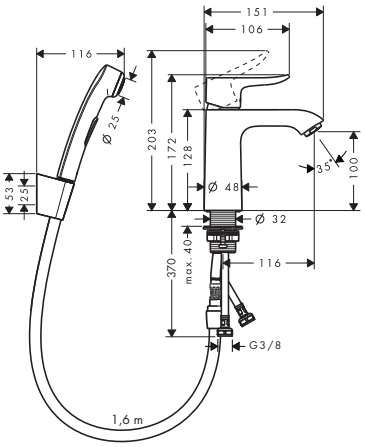

Measurements within scale drawings are in mm.

Technical specifications and units of measure are subject to change.

	finish	code no.	Euro



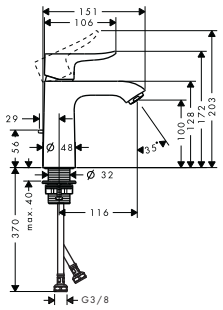

Single lever basin mixer 110 CoolStart with pop-up waste set
- consists of: single lever basin mixer, waste set
- ComfortZone 110
- normal spray
- flow rate at 3 bar: 5 l/min
- ceramic cartridge
- temperature limitation adjustable
- suitable for continuous flow water heaters
- pop-up waste set G 1¼
- material waste set: metal
- connection dimension: DN15
- cold water in middle position

Chrome 31121000 234.10

Air Power · Eco Smart · Quick Clean · Comfort Zone · Cool Start



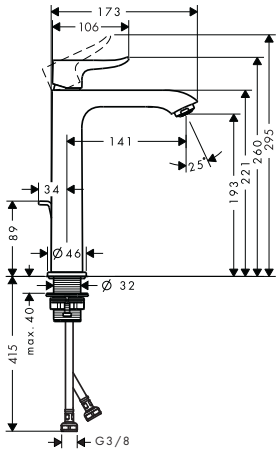

Single lever basin mixer 200 with pop-up waste set
- consists of: single lever basin mixer, waste set
- ComfortZone 200
- projection 141 mm
- normal spray
- flow rate at 3 bar: 5 l/min
- ceramic cartridge
- temperature limitation adjustable
- suitable for continuous flow water heaters
- pop-up waste set G 1¼
- material waste set: metal
- connection dimension: DN15

Chrome 31183000 284.40

Air Power · Eco Smart · Quick Clean · Comfort Zone

Alternative products:
- Single lever basin mixer 200 without waste set — Chrome 31185000 277.40



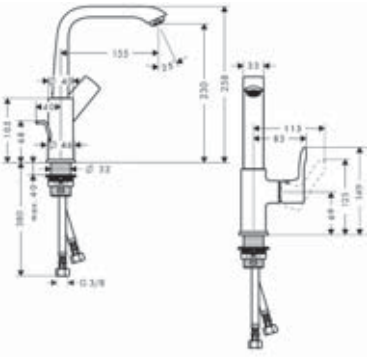

Single lever basin mixer 230 with pop-up waste set
- consists of: single lever basin mixer, waste set
- ComfortZone 230
- projection 155 mm
- swivel range 120°
- normal spray
- flow rate at 3 bar: 5 l/min
- ceramic cartridge
- temperature limitation adjustable
- suitable for continuous flow water heaters
- pop-up waste set G 1¼
- material waste set: metal
- connection dimension: DN15
- handle position on the side: bottom-side at the base body (not suitable for wash bowls)

Chrome 31087000 304.50

Air Power · Eco Smart · Quick Clean · Comfort Zone

Alternative products:
- Single lever basin mixer 230 with push-open waste set — Chrome 31187000 304.50
- Single lever basin mixer 230 without waste set — Chrome 31081000 297.80

Measurements within scale drawings are in mm.

Technical specifications and units of measure are subject to change.

	finish	code no.	Euro
 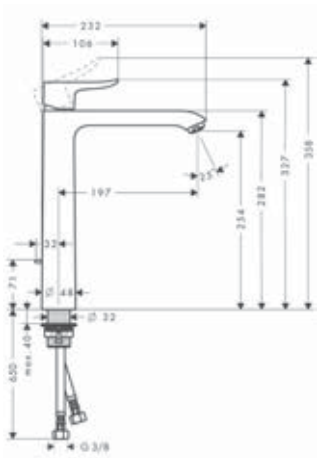	**Single lever basin mixer 260 for washbowls with pop-up waste set** · consists of: single lever basin mixer, waste set · ComfortZone 260 · projection 197 mm · normal spray · flow rate at 3 bar: 5 l/min · ceramic cartridge · temperature limitation adjustable · suitable for continuous flow water heaters · pop-up waste set G 1¼ · material waste set: metal · connection dimension: DN15	Chrome	31082000	311.10
	Alternative products: · Single lever basin mixer 260 for washbowls without waste set	Chrome	31184000	304.30
 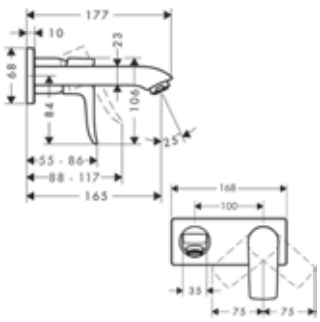	**Single lever basin mixer for concealed installation wall-mounted with spout 16.5 cm** · consists of: Single lever basin mixer for concealed installation wall-mounted, waste set · projection 165 mm · normal spray · flow rate at 3 bar: 5 l/min · ceramic cartridge · temperature limitation adjustable · non-closing waste set · material waste set: metal · connection dimension: DN15 · handle can be positioned on the right or left, depends on the basic set installation	Chrome	31085000	291.00
	Alternative sizes: · Single lever basin mixer for concealed installation wall-mounted with spout 22.5 cm	Chrome	31086000	318.00
	Alternative products: · Single lever basin mixer for concealed installation wall-mounted LowFlow with spout 16.5 cm	Chrome	31251000	280.40
	Required parts: · Basic set for single lever basin mixer for concealed installation wall-mounted		13622180	210.00
 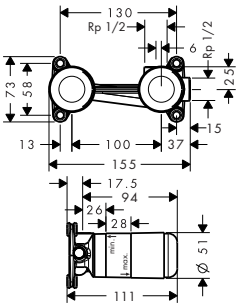	**Basic set for single lever basin mixer for concealed installation wall-mounted** · variable positioning of the mixer system, can be left or right of the spout · connection dimension: DN15		13622180	210.00
	Optional parts: · Extension set 2.5 cm		31971000	104.00
 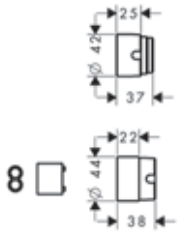	**Extension set 2.5 cm** · extension length: 25 mm		31971000	104.00

Measurements within scale drawings are in mm.

Technical specifications and units of measure are subject to change.

Metris

	finish	code no.	Euro
 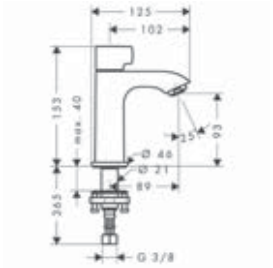	**Pillar tap 100 without waste set** · ComfortZone 100 · projection 89 mm · normal spray · flow rate at 3 bar: 5 l/min · ceramic valves 90° · for cold water connection · connection dimension: DN15	Chrome	31166000	203.20

Bidet

 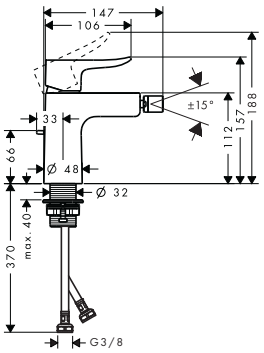	**Single lever bidet mixer with pop-up waste set** · consists of: single lever bidet mixer, waste set · projection 123 mm · ball-pivot joint · laminar spray · flow rate at 3 bar: 7.2 l/min · ceramic cartridge · temperature limitation adjustable · suitable for continous flow water heaters · pop-up waste set G 1¼ · material waste set: metal · connection dimension: DN15	Chrome	31280000	268.10

Bath

 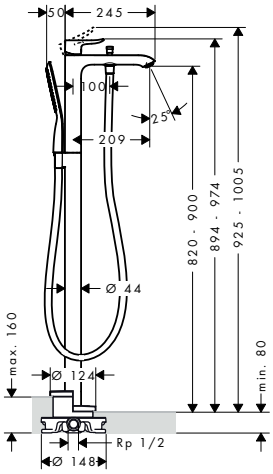	**Single lever bath mixer floor-standing** · consists of: single lever bath mixer floor standing, baton hand shower, shower hose, shower holder · projection 209 mm · connection type: basic set · spray type mixer: normal spray · spray type hand shower: RainAir · flow rate at 3 bar: 21 l/min · ceramic cartridge · min. operating pressure: 1 bar · max. operating pressure: 10 bar · temperature limitation adjustable · with automatic resetting · non-return valve · connection dimension: DN15	Chrome	31471000	1,583.30
	Consisting of: · Baton hand shower 120 1jet (# 28558XXX) · Shower hose 125 cm (# 28272XXX)			
	Required parts: · Basic set for mixers floor-standing		10452180	437.90
	Optional parts: · Sealing foil for basic set bath mixer floor-standing		96441000	117.40
 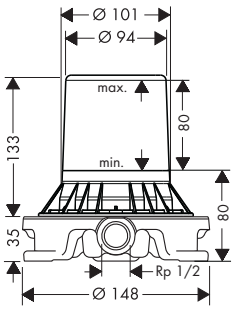	**Basic set for mixers floor-standing** · for mounting on unfinished floor · suitable for single lever bath mixer, single lever basin mixer and bath spout floor-standing · connection dimension: DN15		10452180	437.90
	Optional parts: · Sealing foil for basic set bath mixer floor-standing		96441000	117.40

Measurements within scale drawings are in mm.

Technical specifications and units of measure are subject to change.

	finish	code no.	Euro
 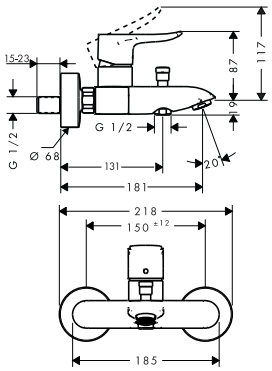	Chrome	31480000	299.10

Single lever bath mixer for exposed installation
- projection 123 - 130.5 mm
- connection type: s-shaped connections
- centre distance: 150 ± 12 mm
- spray type mixer: normal spray
- flow rate for bath spout at 3 bar: 21 l/min
- flow rate of hand shower at 3 bar: 8 l/min
- ceramic cartridge
- min. operating pressure: 1 bar
- max. operating pressure: 10 bar
- temperature limitation adjustable
- with automatic resetting
- intrinsically safe against backflow
- with silencer
- suitable for continous flow water heaters
- connection dimension: DN15

 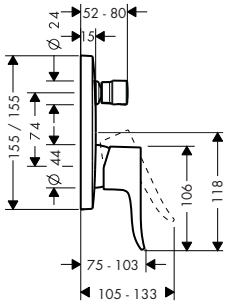	Chrome	31454000	209.70

Single lever bath mixer for concealed installation
- connection type: basic set
- ceramic cartridge
- min. operating pressure: 1 bar
- max. operating pressure: 10 bar
- temperature limitation adjustable
- with automatic resetting
- with silencer

Alternative products:			
· Single lever bath mixer for concealed installation with integrated security combination according to EN1717	Chrome	31451000	324.80
Required parts:			
· Basic set iBox universal		01800180	130.80
Optional parts:			
· Extension element	Chrome	15597000	43.00

 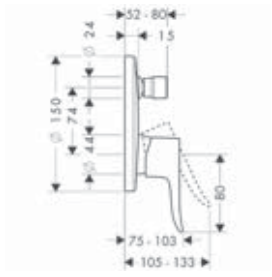	Chrome	31493000	209.70

Single lever bath mixer for concealed installation
- connection type: basic set
- ceramic cartridge
- min. operating pressure: 1 bar
- max. operating pressure: 10 bar
- temperature limitation adjustable
- with automatic resetting
- with silencer

Alternative products:			
· Single lever bath mixer for concealed installation with integrated security combination according to EN1717	Chrome	31487000	324.80
Required parts:			
· Basic set iBox universal		01800180	130.80
Optional parts:			
· Extension element 15 cm	Chrome	13597000	44.10

Measurements within scale drawings are in mm.

	finish	code no.	Euro
 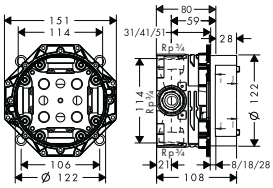 **NEW**	**Basic set iBox universal** · connection thread Rp ¾ · suitable for all shower, bath tub and thermostat finish sets for concealed installation · rotationally-symmetric installation · sound-decoupled installation · connection dimension: DN20		01800180	130.80
	Alternative products: · Basic set iBox universal with shut-off unit		01850180	169.90
	Optional parts: · Extension iBox universal basic set 2.5 cm · Fastening rail set for iBox universal · Assembly aid for iBox universal		13595000 96615000 93500000	46.50 33.00 12.00
 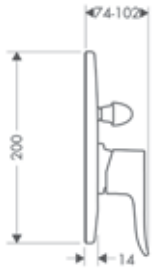	**Single lever bath mixer for concealed installation** · connection type: basic set · ceramic cartridge · min. operating pressure: 1 bar · max. operating pressure: 10 bar · temperature limitation adjustable · with automatic resetting	Chrome	31484000	108.20
	Required parts: · Basic set for single lever bath mixer for concealed installation		31741180	118.60
 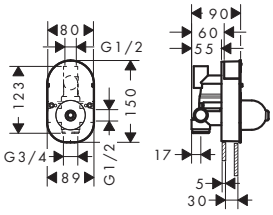	**Basic set for single lever bath mixer for concealed installation** · ceramic cartridge · connection dimension: DN15		31741180	118.60
 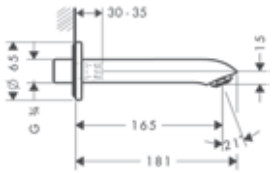	**Bath spout** · projection 165 mm · wall-mounted · flow rate: 20 l/ min · spray type: normal spray	Chrome	31494000	200.90
 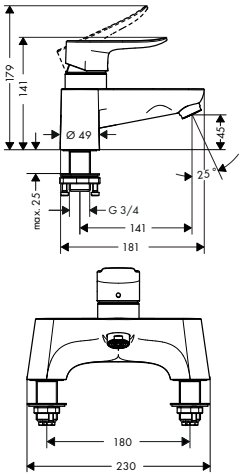	**2-hole rim mounted bath mixer** · connection type: G ¾ · centre distance: 180 mm · ceramic cartridge (Highflow) · operating pressure from 0.02 MPa · with automatic resetting · non-return valve · with silencer · connection dimension: DN15	Chrome	31423000	299.10

Measurements within scale drawings are in mm.

Technical specifications and units of measure are subject to change.

	finish	code no.	Euro
2-hole rim mounted bath mixer with diverter valve and Croma 100 hand shower Vario · consists of: 2-hole rim mounted bath mixer, hand shower, shower holder, shower hose · connection type: G ¾ · centre distance: 180 mm · ceramic cartridge (Highflow) · operating pressure from 0.02 MPa · with automatic resetting · non-return valve · with silencer · connection dimension: DN15 **Consisting of:** · Hand shower Vario EcoSmart 9 l/min (# 28537000) · Shower holder Porter S (# 28331XXX) · Shower hose 160 cm (# 28276XXX)	Chrome	31422000	360.00
3-hole rim mounted single lever bath mixer · consists of: 3-hole rim mounted single lever bath mixer, baton hand shower, shower hose, shower holder · projection 220 mm · connection type: basic set · spray type mixer: normal spray · spray type hand shower: RainAir · maximum pull-out length of hand shower: 1.10 m · flow rate at 3 bar: 22 l/min · ceramic cartridge · min. operating pressure: 1 bar · max. operating pressure: 10 bar · temperature limitation adjustable · connection dimension: DN15 **Required parts:** · Basic set for 3-hole rim mounted single lever bath mixer	Chrome	31190000 13437180	717.90 653.90
Basic set for 3-hole rim mounted single lever bath mixer · consists of: basic set, shower hose, Secubox · maximum pull-out length of hand shower: 1.10 m · connection dimension: DN15 **Optional parts:** · Secuflex insert extension		13437180 98806000	653.90 3.70

Measurements within scale drawings are in mm.

Technical specifications and units of measure are subject to change.

	finish	code no.	Euro
 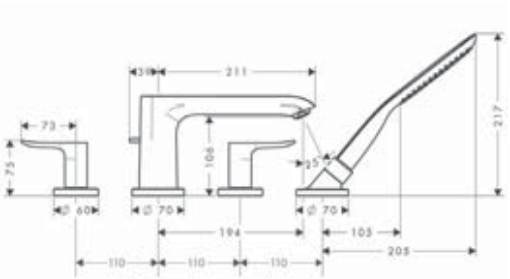			
4-hole rim mounted bath mixer · consists of: 4-hole rim mounted bath mixer, baton hand shower, shower hose, shower holder · projection 220 mm · connection type: basic set · spray type mixer: normal spray · spray type hand shower: RainAir · maximum pull-out length of hand shower: 1.10 m · flow rate at 3 bar: 22 l/ min · ceramic valves hot/ cold 90° · min. operating pressure: 1 bar · max. operating pressure: 10 bar · connection dimension: DN15	Chrome	31442000	717.90
Consisting of: · Baton hand shower 120 1jet (# 28558XXX)			
Required parts: · Basic set for 4-hole rim mounted bath mixer		13444180	798.10
 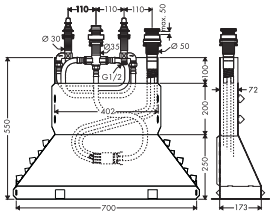			
Basic set for 4-hole rim mounted bath mixer · consists of: basic set, shower hose, Secubox · maximum pull-out length of hand shower: 1.10 m · connection dimension: DN15		13444180	798.10
Optional parts: · Secuflex insert extension		98806000	3.70
Shower			
 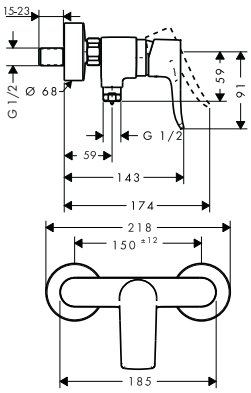			
Single lever shower mixer for exposed installation · 1 outlet · connection type: s-shaped connections · centre distance: 150 ± 12 mm · flow rate of hand shower at 3 bar: 16 l/ min · ceramic cartridge · min. operating pressure: 1 bar · max. operating pressure: 10 bar · temperature limitation adjustable · non-return valve · with silencer · hose connection DN15 · connection dimension: DN15	Chrome	31680000	253.10
 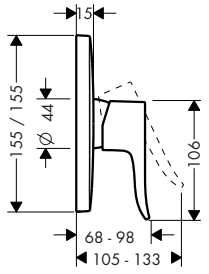			
Single lever shower mixer for concealed installation · 1 outlet · connection type: basic set · ceramic cartridge · min. operating pressure: 1 bar · max. operating pressure: 10 bar · temperature limitation adjustable · with silencer	Chrome	31456000	196.20
Required parts: · Basic set iBox universal		01800180	130.80
Optional parts: · Extension element	Chrome	15597000	43.00

Measurements within scale drawings are in mm.

Technical specifications and units of measure are subject to change.

	finish	code no.	Euro
 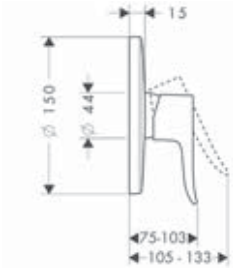			
Single lever shower mixer for concealed installation · 1 outlet · connection type: basic set · ceramic cartridge · min. operating pressure: 1 bar · max. operating pressure: 10 bar · temperature limitation adjustable · with silencer	Chrome	31685000	196.20
Required parts: · Basic set iBox universal		01800180	130.80
Optional parts: · Extension element 15 cm	Chrome	13597000	44.10
 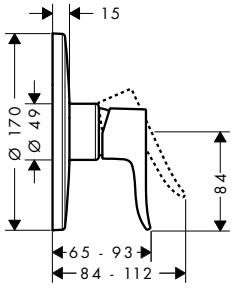			
Single lever shower mixer HighFlow for concealed installation · 1 outlet · connection type: basic set · flow rate at 3 bar: 49 l/min · ceramic cartridge (Highflow) · temperature limitation adjustable · connection dimension: DN15	Chrome	31652000	196.20
Required parts: · Basic set iBox universal with shut-off unit · Basic set iBox universal		01850180 01800180	169.90 130.80
Optional parts: · Basic set for Trio diverter valve for concealed installation		15984180	153.20
 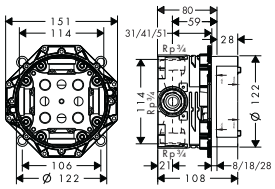			
Basic set iBox universal · connection thread Rp ¾ · suitable for all shower, bath tub and thermostat finish sets for concealed installation · rotationally-symmetric installation · sound-decoupled installation · connection dimension: DN20		01800180	130.80
Alternative products: · Basic set iBox universal with shut-off unit		01850180	169.90
Optional parts: · Extension iBox universal basic set 2.5 cm · Fastening rail set for iBox universal · Assembly aid for iBox universal		13595000 96615000 93500000	46.50 33.00 12.00
NEW			
 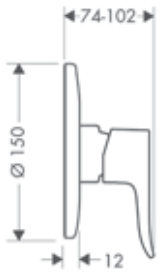			
Single lever shower mixer for concealed installation · 1 outlet · connection type: basic set · min. operating pressure: 1 bar · max. operating pressure: 10 bar	Chrome	31686000	94.80
Required parts: · Basic set for single lever shower mixer for concealed installation		13620180	105.30

Measurements within scale drawings are in mm.

	finish	code no.	Euro
Basic set for single lever shower mixer for concealed installation · ceramic cartridge · connection dimension: DN15		13620180	105.30



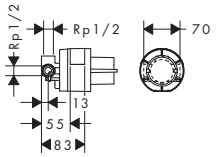

Measurements within scale drawings are in mm.

Technical specifications and units of measure are subject to change.

Possible combinations Metris S

Basin


no.31022000*


no.31159000*


no.31060000*


no.31163000*


no.31100000*

Bath


no.31460000


no.31465000*


no.13114000


no.15743000


no.15758000


no.31446000

Shower


no.31660000


no.31665000


no.13116000


no.15744000


no.15757000


no.26530000, -400*


no.27378000, -400


no.26631000, -400*


no.27133000, -400

Accessories


no.40514000


no.40523000


no.40522000


no.01800180

* as an example

Basin

	finish	code no.	Euro
Single lever basin mixer 100 with pop-up waste set · consists of: single lever basin mixer, waste set · ComfortZone 100 · projection 113 mm · normal spray · flow rate at 3 bar: 5 l/min · ceramic cartridge · temperature limitation adjustable · suitable for continuous flow water heaters · pop-up waste set G 1¼ · material waste set: metal · connection dimension: DN15	Chrome	31060000	260.70
Alternative products:			
· Single lever basin mixer without waste set	Chrome	31068000	248.60
· Single lever basin mixer 100 LowFlow without waste set	Chrome	31015000	241.70
· Single lever basin mixer 100 LowFlow 3.5 l/min with pop-up waste set	Chrome	31063000	251.20
· Single lever basin mixer 100 LowFlow 2 l/min with pop-up waste set	Chrome	31016000	253.30



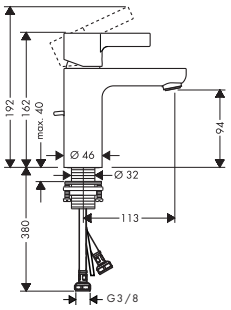

Single lever basin mixer with bidette hand shower and shower hose 160 cm · consists of: single lever basin mixer, bidette hand shower, shower holder, shower hose · ComfortZone 90 · flow rate at 3 bar: 5 l/min · ceramic cartridge · temperature limitation adjustable · suitable for continuous flow water heaters · connection dimension: DN15	Chrome	31160000	289.50



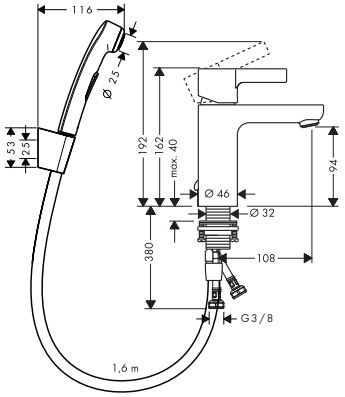

Single lever basin mixer with swivel spout and pop-up waste set · consists of: single lever basin mixer, waste set · ComfortZone 230 · projection 138 mm · swivel range 120° · normal spray · flow rate at 3 bar: 5 l/min · ceramic cartridge · temperature limitation adjustable · suitable for continuous flow water heaters · pop-up waste set G 1¼ · material waste set: metal · connection dimension: DN15 · handle position on the side: bottom-side at the base body (not suitable for wash bowls)	Chrome	31159000	320.30
Alternative products:			
· Single lever basin mixer 230 with swivel spout and push-open waste set	Chrome	31161000	320.30



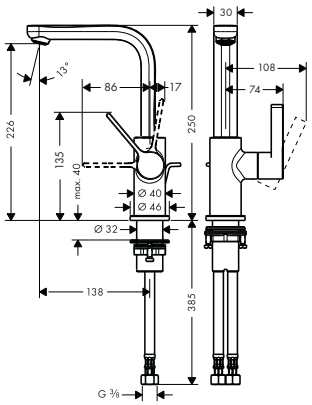

Measurements within scale drawings are in mm.

Technical specifications and units of measure are subject to change.

	finish	code no.	Euro
 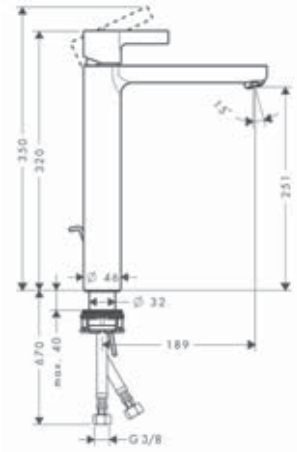			
Single lever basin mixer 260 for washbowls with pop-up waste set · consists of: single lever basin mixer, waste set · ComfortZone 260 · projection 189 mm · normal spray · flow rate at 3 bar: 5 l/min · ceramic cartridge · temperature limitation adjustable · suitable for continuous flow water heaters · pop-up waste set G 1¼ · material waste set: metal · connection dimension: DN15	Chrome	31022000	340.50
Alternative products: · Single lever basin mixer for washbowls without waste set	Chrome	31023000	328.50
 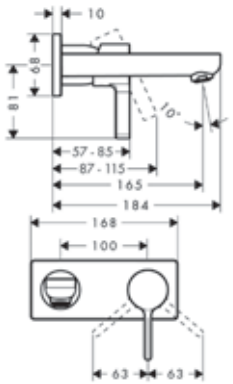			
Single lever basin mixer for concealed installation wall-mounted with spout 16.5 cm · consists of: Single lever basin mixer for concealed installation wall-mounted, waste set · projection 165 mm · normal spray · flow rate at 3 bar: 5 l/min · ceramic cartridge · temperature limitation adjustable · suitable for continuous flow water heaters · non-closing waste set · material waste set: metal · connection dimension: DN15 · handle can be positioned on the right or left, depends on the basic set installation	Chrome	31162000	323.40
Alternative sizes: · Single lever basin mixer for concealed installation wall-mounted with spout 22.5 cm	Chrome	31163000	351.60
Required parts: · Basic set for single lever basin mixer for concealed installation wall-mounted		13622180	210.00
 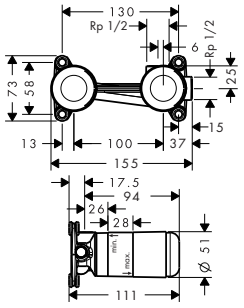			
Basic set for single lever basin mixer for concealed installation wall-mounted · variable positioning of the mixer system, can be left or right of the spout · connection dimension: DN15		13622180	210.00
Optional parts: · Extension set 2.5 cm		31971000	104.00
 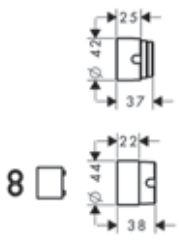			
Extension set 2.5 cm · extension length: 25 mm		31971000	104.00

Measurements within scale drawings are in mm.

	finish	code no.	Euro



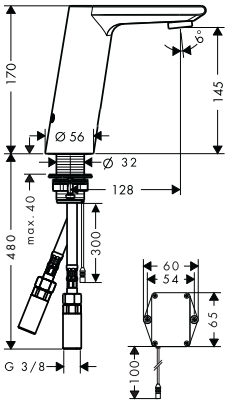

Electronic basin mixer with temperature control battery operation

Chrome — 31100000 — 680.50

Air Power · Eco Smart · Comfort Zone

- ComfortZone 150
- projection 128 mm
- flow rate at 3 bar: 5 l/min
- theft-proof aerator
- temperature limitation adjustable
- temperature adjustable via mixer lever on the side
- non-return valve
- suitable for continous flow water heaters
- infrared sensor technology
- automatic environmental adjustment of infrared sensor
- adjustable optical range of infrared sensor (2 settings)
- battery condition indicator available
- battery operation 6 V (Lithium battery, lifetime approx. 2 years, battery included in scope of delivery)
- hygiene rinse activatable (automatic water flow for 10 seconds every 24 hours following the last operation)
- permanent rinse activatable (single water flow for 180 seconds, suitable for thermal disinfection)
- manual water stop for washbasin cleaning
- performance may be impaired if the sensor is obscured by the design of the wash basin, or when the wash basin is oversized and the distance between sensor and the wash basin edge is larger than 75 mm
- functional restriction due to too large distance
- connection dimension: DN15
- TÜV certified
- dirt filters in the connection hoses
- two filter units with fine filter to protect from incoming dirt, for assembly on existing angle valves, filter element can be removed and cleaned

Alternative products:

· Electronic basin mixer with temperature pre-adjustment battery operation	Chrome	31101000	627.60
· Electronic basin mixer with temperature control mains connection 230 V	Chrome	31102000	721.40
· Electronic basin mixer with temperature pre-adjustment mains connection 230 V	Chrome	31103000	667.00

Bidet



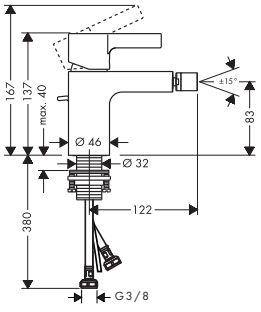

Single lever bidet mixer with pop-up waste set

Chrome — 31261000 — 260.70

- consists of: single lever bidet mixer, waste set
- projection 122 mm
- aerator with ball pivot
- laminar spray
- flow rate at 3 bar: 7.2 l/min
- ceramic cartridge
- temperature limitation adjustable
- suitable for continous flow water heaters
- material waste set: metal
- connection dimension: DN15

Measurements within scale drawings are in mm.

Technical specifications and units of measure are subject to change.

Bath

	finish	code no.	Euro
 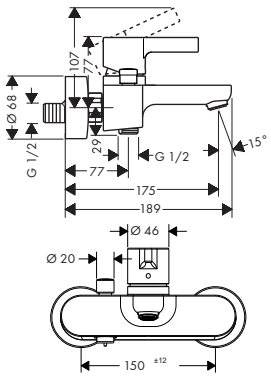	**Single lever bath mixer for exposed installation** · projection 167.5 - 175 mm · connection type: s-shaped connections · centre distance: 150 mm · spray type mixer: normal spray · flow rate for bath spout at 3 bar: 22 l/min · flow rate of hand shower at 3 bar: 16 l/min · ceramic cartridge · min. operating pressure: 1 bar · max. operating pressure: 10 bar · temperature limitation adjustable · with automatic resetting · non-return valve · with silencer · connection dimension: DN15	Chrome	31460000	340.00
 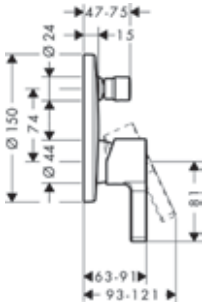	**Single lever bath mixer for concealed installation** · connection type: basic set · ceramic cartridge · min. operating pressure: 1 bar · max. operating pressure: 10 bar · temperature limitation adjustable · with automatic resetting · with silencer	Chrome	31465000	234.00
	Alternative products: · Single lever bath mixer for concealed installation with integrated security combination according to EN1717	Chrome	31466000	371.70
	Required parts: · Basic set iBox universal		01800180	130.80
	Optional parts: · Extension element 15 cm	Chrome	13597000	44.10
 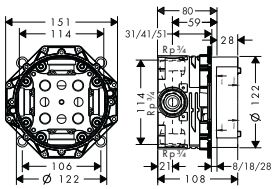	**Basic set iBox universal** · connection thread Rp ¾ · suitable for all shower, bath tub and thermostat finish sets for concealed installation · rotationally-symmetric installation · sound-decoupled installation · connection dimension: DN20		01800180	130.80
	Alternative products: · Basic set iBox universal with shut-off unit		01850180	169.90
	Optional parts: · Extension iBox universal basic set 2.5 cm · Fastening rail set for iBox universal · Assembly aid for iBox universal		13595000 96615000 93500000	46.50 33.00 12.00
	NEW			
 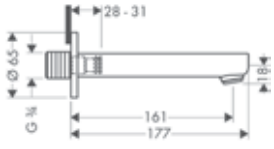	**Bath spout** · connection type: G ¾ · projection 161 mm · wall-mounted · flow rate: 20 l/min · spray type: normal spray	Chrome	14420000	171.50

Measurements within scale drawings are in mm.

Technical specifications and units of measure are subject to change.

	finish	code no.	Euro
 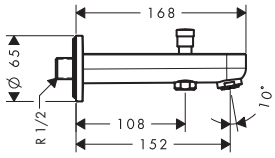	**Bath spout 15.2 cm with diverter valve** · connection type: G ½ · with automatic resetting · with escutcheon · with integrated safety combination EN1717 · projection 152 mm · wall-mounted · flow rate: 25 l/ min · connection dimension: DN15 · intrinsically safe against backflow	Chrome	31417000	166.30
	Alternative sizes: · Bath spout 22.8 cm with diverter valve	Chrome	31416000	179.10
 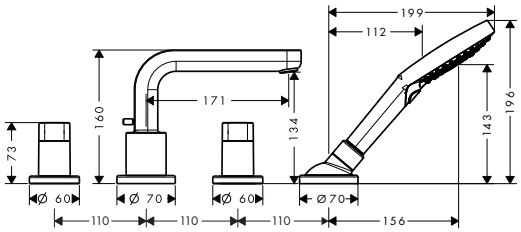	**4-hole rim mounted bath mixer with spout 17.1 cm** · consists of: 4-hole rim mounted bath mixer, hand shower, shower hose, shower holder · projection 171 mm · connection type: basic set · spray type mixer: normal spray · spray type hand shower: Rain, RainAir, Whirl · maximum pull-out length of hand shower: 1.10 m · flow rate at 3 bar: 22 l/ min · ceramic valves hot/ cold 90° · min. operating pressure: 1 bar · max. operating pressure: 10 bar · connection dimension: DN15	Chrome	31446000	713.30
	Consisting of: · Hand shower 120 3jet (# 26530XXX)			
	Alternative sizes: · 4-hole rim mounted bath mixer with spout 22 cm	Chrome	31447000	713.30
	Required parts: · Basic set for 4-hole rim mounted bath mixer		13444180	798.10
 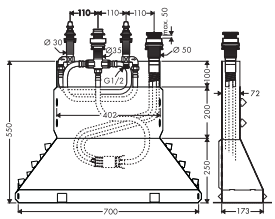	**Basic set for 4-hole rim mounted bath mixer** · consists of: basic set, shower hose, Secubox · maximum pull-out length of hand shower: 1.10 m · connection dimension: DN15		13444180	798.10
	Optional parts: · Secuflex insert extension		98806000	3.70

Measurements within scale drawings are in mm.

Technical specifications and units of measure are subject to change.

	finish	code no.	Euro
 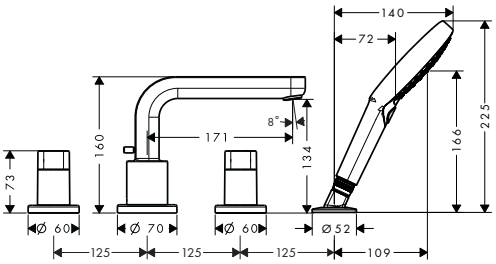			
4-hole rim mounted bath mixer · consists of: 4-hole rim mounted bath mixer, hand shower, shower holder · connection type: basic set · flow rate at 3 bar: 22 l/min · ceramic valves hot/ cold 90° · min. operating pressure: 1 bar · max. operating pressure: 10 bar · non-return valve · connection dimension: DN15 · with integrated safety combination EN1717 **Consisting of:** · Hand shower 120 3jet (# 26530XXX) **Required parts:** · Basic set for 4-hole rim mounted bath mixer	Chrome	31443000 13244180	558.40 275.20
 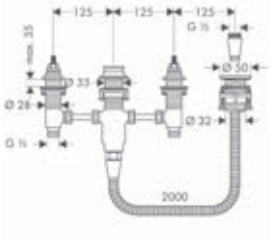			
Basic set for 4-hole rim mounted bath mixer · consists of: basic set, shower holder, shower hose · maintenance opening required · suitable for 4-hole rim mounted bath mixer · connection thread: G ½ · connection dimension: DN15 · ceramic valves hot/ cold 90°		13244180	275.20
Shower			
 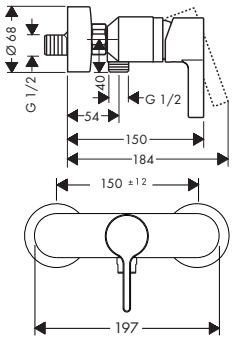			
Single lever shower mixer for exposed installation · 1 outlet · connection type: s-shaped connections · centre distance: 150 ± 12 mm · flow rate of hand shower at 3 bar: 12 l/min · ceramic cartridge · min. operating pressure: 1 bar · max. operating pressure: 10 bar · temperature limitation adjustable · non-return valve · with silencer · hose connection DN15 · connection dimension: DN15	Chrome	31660000	260.70
 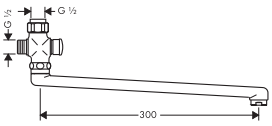			
Long swivel spout 30 cm · with automatic resetting · for installation on single lever shower mixer · length 300 mm · connection dimension DN15	Chrome	14495000	93.60

Measurements within scale drawings are in mm.

Technical specifications and units of measure are subject to change.

	finish	code no.	Euro
 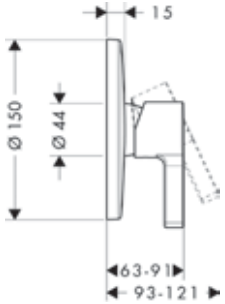			
Single lever shower mixer for concealed installation · 1 outlet · connection type: basic set · ceramic cartridge · min. operating pressure: 1 bar · max. operating pressure: 10 bar · temperature limitation adjustable	Chrome	31665000	212.10
Required parts:			
· Basic set iBox universal		01800180	130.80
Optional parts:			
· Extension element 15 cm	Chrome	13597000	44.10

 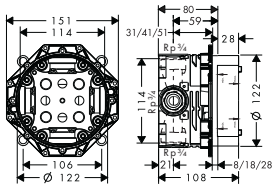			
Basic set iBox universal · connection thread Rp ¾ · suitable for all shower, bath tub and thermostat finish sets for concealed installation · rotationally-symmetric installation · sound-decoupled installation · connection dimension: DN20		01800180	130.80
Alternative products:			
· Basic set iBox universal with shut-off unit		01850180	169.90
Optional parts:			
· Extension iBox universal basic set 2.5 cm		13595000	46.50
· Fastening rail set for iBox universal		96615000	33.00
NEW · Assembly aid for iBox universal		93500000	12.00

Measurements within scale drawings are in mm.

Technical specifications and units of measure are subject to change.

Talis®



Talis Select E / Talis E page 324 

Talis S page 348 

Talis Select S / Talis S page 337 

Possible combinations Talis Select E / Talis E

Basin


no.71752000*


no.71716000*


no.71754000*


no.71750000*


no.71710000*


no.71700000*


no.71706000


no.71733000


no.71734000*

Bath


no.71740000*


no.71745000*


no.71747000


no.71748000


no.15763000


no.15707000


no.13114000

Shower


no.71760000*


no.71765000*


no.13116000


no.15762000


no.15708000


no.26810400*


no.26524000, -400


no.26590400*


no.27256400

Accessories


no.41503000


no.41508000


no.41505000


no.01800180

* as an example

Additional FinishPlus products Talis E

NEW

Hand showers and accessories



Rainfinity®
Hand shower 130 3jet
26864, -000, -140, -340, -670, -700, -990
Hand shower 130 3jet EcoSmart
26865, -000, -140, -340, -670, -700, -990



Rainfinity®
Baton hand shower 100 1jet
26866, -000, -140, -340, -670, -700, -990
Baton hand shower 100 1jet EcoSmart
26867, -000, -140, -340, -670, -700, -990



Raindance® Select E
Hand shower 120 3jet
26520, -000, -140, -340, -400, -670, -700, -990

Raindance® Select S
Hand shower 120 3jet
26530, -000, -140, -340, -400, -670, -700, -990 (not shown)

Hand shower 120 3jet EcoSmart 9 l/min
26531, -000, -140, -340, -400, -670, -700, -990 (not shown)



FixFit®
Wall outlet Square
with non-return valve
26455, -000, -140, -340, -670, -700, -990
Wall outlet E
without non-return valve
27454, -000, -140, -340, -670, -700, -990 (not shown)



Shower holder Porter E
28387, -000, -140, -340, -670, -700, -990



Isiflex®
Shower hose 160 cm
28276, -000, -140, -340, -670, -700, -990

Overhead showers and accessories



Rainfinity®
Overhead shower 360 3jet with wall connector
26234, -000, -140, -340, -670, -700, -990



Rainfinity®
Overhead shower 360 1jet with wall connector
26230, -000, -140, -340, -670, -700, -990



Rainfinity®
Overhead shower 360 1jet
26231, -000, -140, -340, -670, -700, -990



Rainfinity®
Overhead shower 250 1jet
26228, -000, -140, -340, -670, -700, -990
Overhead shower 250 1jet EcoSmart
26229, -000, -140, -340, -670, -700, -990



Raindance® E
Overhead shower 300 1jet with ceiling connector
26250, -000, -140, -340, -670, -700, -990

Overhead shower 300 1jet with shower arm
26238, -000, -140, -340, -670, -700, -990 (not shown)

Croma®
Overhead shower 280 1jet
26220, -000, -140, -340, -670, -700, -990 (not shown)

Overhead shower 280 1jet EcoSmart 9 l/min
26221, -000, -140, -340, -670, -700, -990 (not shown)



Ceiling connector S 10 cm
27393, -000, -140, -340, -670, -700, -990

Ceiling connector S 30 cm
27389, -000, -140, -340, -670, -700, -990 (not shown)

Shower arm square 38.9 cm
27694, -000, -140, -340, -670, -700, -990 (not shown)

Shower arm 38.9 cm
27413, -000, -140, -340, -670, -700, -990 (not shown)

Additional FinishPlus products Talis E

NEW

Shower bars and Showerpipes



Unica®
Shower bar S Puro 65 cm
with shower hose
28632, -000, -140, -340, -670, -700, -990

Shower bar S Puro 90 cm
with shower hose (not shown)
28631, -000, -140, -340, -670, -700, -990



Raindance® Select S
Showerpipe 240 1jet P with thermostat
27633, -000, -140, -340, -670, -700, -990

Croma® Select S
Showerpipe 280 1jet with thermostat
26890, -140, -340, -670, -700, -990 (not shown)

Showerpipe 280 1jet EcoSmart 9 l/min with thermostat
26891, -140, -340, -670, -700, -990 (not shown)

Thermostat for exposed / concealed installation



Ecostat®
Shower thermostat Comfort for exposed installation
13116, -000, -140, -340, -670, -700, -990



Ecostat®
Bath thermostat Comfort for exposed installation
13114, -000, -140, -340, -670, -700, -990



RainSelect®
Thermostat for concealed installation
for 2 functions
15380, -000, -140, -340, -670, -700, -990

Basic set for 2 functions
15310180 (not shown)



RainSelect®
Thermostat for concealed installation
for 4 functions
15382, -000, -140, -340, -670, -700, -990

Basic set for 4 functions
15312180 (not shown)



ShowerSelect®
Thermostat for concealed installation
for 2 functions
15763, -000, -140, -340, -670, -700, -990

ShowerSelect® S
Thermostat for concealed installation
for 2 functions
15743, -000, -140, -340, -670, -700, -990 (not shown)



Ecostat® Square
Thermostat for concealed installation
for 2 functions
15714, -000, -140, -340, -670, -700, -990

Ecostat® S
Thermostat for concealed installation
for 2 functions
15758, -000, -140, -340, -670, -700, -990 (not shown)

Additional FinishPlus products Talis E

NEW

Wastes and overflow



Exafill® S
Finish set bath filler, waste and overflow set
58117, -000, -140, -340, -670, -700, -990



Flexaplus®
Finish set waste and overflow set
58185, -000, -140, -340, -670, -700, -990



Design trap Flowstar S
52105, -000, -140, -340, -670, -700, -990

Waste set push-open
for basin and bidet mixers
50100, -000, -140, -340, -670, -700, -990 (not shown)
Cover
13950, -000, -140, -670, -700, -990 (not shown)



sBox®
Finish set square
28010, -000, -140, -340, -670, -700, -990

Rim and tile mounted bath basic set
13560180 (not shown)

Installation plate for tile mounted installation
28016000 (not shown)

Mounting angle for installation plate
for tile mounted installation
28021000 (not shown)

Kitchen mixers



Metris® Select M71
2-hole single lever kitchen mixer
with pull-out spray
73818, -000, -340, -670, -800



Focus® M41
Single lever kitchen mixer 240
with pull-out spray
31815, -000, -670, -800



Focus® M41
Single lever kitchen mixer 280
with swivel spout
31817, -000, -670, -800



Focus® M41
Single lever kitchen mixer 260
with swivel spout
31820, -000, -670, -800

-000 Chrome
-140 Brushed Bronze
-340 Brushed Black Chrome
-670 Matt Black
-700 Matt White
-990 Polished Gold Optic

Basin

	finish	code no.	Euro
Basin mixer 110 with pop-up waste set · consists of: Basin mixer, waste set · ComfortZone 110 · projection 112 mm · normal spray · flow rate at 3 bar: 5 l/min · Select cartridge with temperature control · temperature limitation adjustable · suitable for continuous flow water heaters · pop-up waste set G 1¼ · material waste set: metal · connection dimension: DN15	Chrome	71750000	178.70
Alternative products:			
· Basin mixer 110 without waste set	Chrome	71751000	171.90



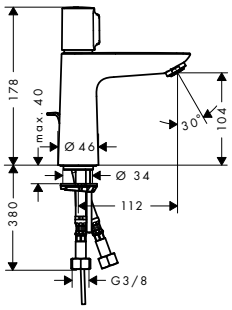

	finish	code no.	Euro
Basin mixer 240 with pop-up waste set · consists of: Basin mixer, waste set · ComfortZone 240 · projection 183 mm · normal spray · flow rate at 3 bar: 5 l/min · Select cartridge with temperature control · temperature limitation adjustable · suitable for continuous flow water heaters · pop-up waste set G 1¼ · material waste set: metal · connection dimension: DN15	Chrome	71752000	261.20
Alternative products:			
· Basin mixer 240 without waste set	Chrome	71753000	255.50



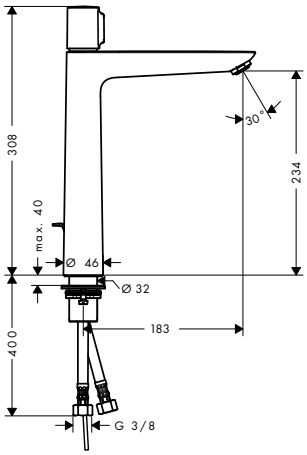

		finish	code no.	Euro
Single lever basin mixer 110 with pop-up waste set · consists of: single lever basin mixer, waste set · ComfortZone 110 · projection 112 mm · normal spray · flow rate at 3 bar: 5 l/min · ceramic cartridge · temperature limitation adjustable · suitable for continuous flow water heaters · pop-up waste set G 1¼ · material waste set: metal · connection dimension: DN15		Chrome	71710000	131.20
	NEW	Brushed Bronze	71710140	196.60
	NEW	Brushed Black Chrome	71710340	196.60
	NEW	Matt Black	71710670	184.30
	NEW	Matt White	71710700	184.30
	NEW	Polished Gold Optic	71710990	196.60
Alternative products:				
· Single lever basin mixer 110 with push-open waste set		Chrome	71711000	131.20
· Single lever basin mixer 110 without waste set		Chrome	71712000	124.40
	NEW	Brushed Bronze*	71712140	186.60
	NEW	Brushed Black Chrome*	71712340	186.60
	NEW	Matt Black*	71712670	174.20
	NEW	Matt White*	71712700	174.20
	NEW	Polished Gold Optic*	71712990	186.60
· Single lever basin mixer 110 LowFlow with pop-up waste set		Chrome	71715000	131.20



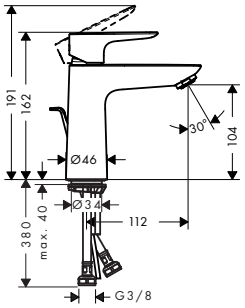

***available from April 2020**

Measurements within scale drawings are in mm.

Technical specifications and units of measure are subject to change.

	finish	code no.	Euro
Single lever basin mixer 110 CoolStart with pop-up waste set	Chrome	71713000	131.20
	NEW Brushed Bronze	71713140	196.60
	NEW Brushed Black Chrome	71713340	196.60
	NEW Matt Black	71713670	184.30
	NEW Matt White	71713700	184.30
	NEW Polished Gold Optic	71713990	196.60



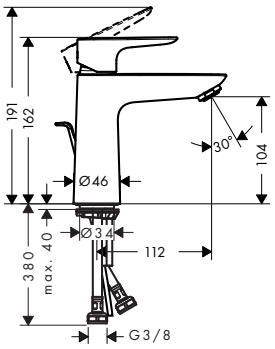

- consists of: single lever basin mixer, waste set
- ComfortZone 110
- projection 112 mm
- normal spray
- flow rate at 3 bar: 5 l/min
- ceramic cartridge
- temperature limitation adjustable
- suitable for continuous flow water heaters
- pop-up waste set G 1¼
- material waste set: metal
- connection dimension: DN15
- cold water in middle position

Air Power · Eco Smart · Quick Clean · Comfort Zone · Cool Start

Alternative products:

· Single lever basin mixer 110 CoolStart without waste set	Chrome	71714000	124.40
	NEW Brushed Bronze*	71714140	186.60
	NEW Brushed Black Chrome*	71714340	186.60
	NEW Matt Black*	71714670	174.20
	NEW Matt White*	71714700	174.20
	NEW Polished Gold Optic*	71714990	186.60

***available from April 2020**

---

	finish	code no.	Euro
Single lever basin mixer 80 with pop-up waste set	Chrome	71700000	107.50



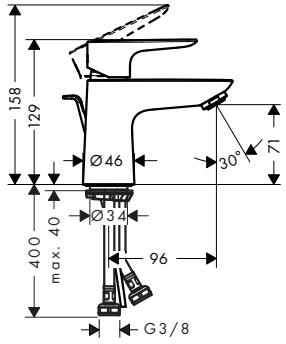

- consists of: single lever basin mixer, waste set
- ComfortZone 80
- projection 96 mm
- normal spray
- flow rate at 3 bar: 5 l/min
- ceramic cartridge
- temperature limitation adjustable
- suitable for continuous flow water heaters
- pop-up waste set G 1¼
- material waste set: metal
- connection dimension: DN15

Air Power · Eco Smart · Quick Clean · Comfort Zone

Alternative products:

· Single lever basin mixer 80 with push-open waste set	Chrome	71701000	107.50
· Single lever basin mixer 80 without waste set	Chrome	71702000	100.80
· Single lever basin mixer 80 LowFlow with pop-up waste set	Chrome	71705000	107.50
· Single lever basin mixer 80 for vented hot water cylinders with pop-up waste set	Chrome	71707000	208.10

---

	finish	code no.	Euro
Single lever basin mixer 80 CoolStart with pop-up waste set	Chrome	71703000	107.50



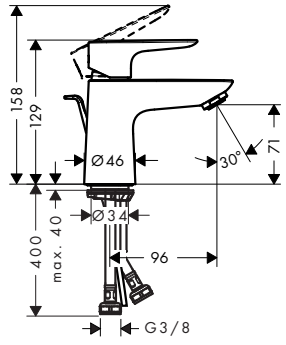

- consists of: single lever basin mixer, waste set
- ComfortZone 80
- projection 96 mm
- normal spray
- flow rate at 3 bar: 5 l/min
- ceramic cartridge
- temperature limitation adjustable
- suitable for continuous flow water heaters
- pop-up waste set G 1¼
- material waste set: metal
- connection dimension: DN15
- cold water in middle position

Air Power · Eco Smart · Quick Clean · Comfort Zone · Cool Start

Alternative products:

· Single lever basin mixer 80 CoolStart without waste set	Chrome	71704000	100.80

Measurements within scale drawings are in mm.

Technical specifications and units of measure are subject to change.



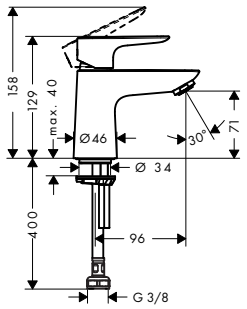

		finish	code no.	Euro
Pillar tap 80 for cold water · ComfortZone 80 · projection 96 mm · normal spray · flow rate at 3 bar: 5 l/min · ceramic cartridge · for cold water connection · connection dimension: DN15		Chrome	71706000	95.00

Air Power · Eco Smart · Quick Clean · Comfort Zone



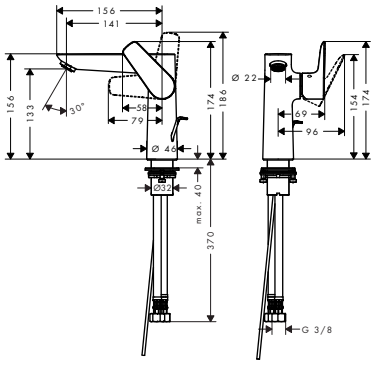

Single lever basin mixer 150 with pop-up waste set · consists of: single lever basin mixer, waste set · ComfortZone 150 · projection 141 mm · normal spray · flow rate at 3 bar: 5 l/min · ceramic cartridge · temperature limitation adjustable · suitable for continuous flow water heaters · pop-up waste set G 1¼ · material waste set: metal · connection dimension: DN15		Chrome	71754000	202.60
	NEW	Brushed Bronze	71754140	304.10
	NEW	Brushed Black Chrome	71754340	304.10
	NEW	Matt Black	71754670	283.70
	NEW	Matt White	71754700	283.70
	NEW	Polished Gold Optic	71754990	304.10
Alternative products: · Single lever basin mixer 150 without waste set		Chrome	71755000	195.70

Air Power · Eco Smart · Quick Clean · Comfort Zone



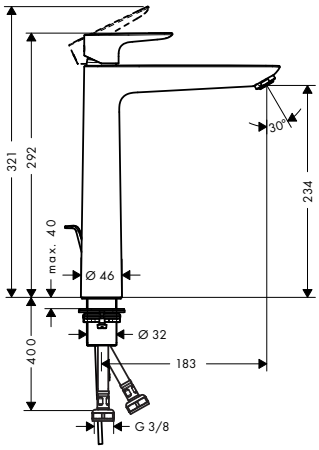

Single lever basin mixer 240 with pop-up waste set · consists of: single lever basin mixer, waste set · ComfortZone 240 · projection 183 mm · normal spray · flow rate at 3 bar: 5 l/min · ceramic cartridge · temperature limitation adjustable · suitable for continuous flow water heaters · pop-up waste set G 1¼ · material waste set: metal · connection dimension: DN15		Chrome	71716000	219.40
	NEW	Brushed Bronze	71716140	329.70
	NEW	Brushed Black Chrome	71716340	329.70
	NEW	Matt Black	71716670	307.20
	NEW	Matt White	71716700	307.20
	NEW	Polished Gold Optic	71716990	329.70
Alternative products: · Single lever basin mixer 240 without waste set		Chrome	71717000	213.80
	NEW	Brushed Bronze*	71717140	320.70
	NEW	Brushed Black Chrome*	71717340	320.70
	NEW	Matt Black*	71717670	299.30
	NEW	Matt White*	71717700	299.30
	NEW	Polished Gold Optic*	71717990	320.70

Air Power · Eco Smart · Quick Clean · Comfort Zone

***available from April 2020**

Measurements within scale drawings are in mm.

Technical specifications and units of measure are subject to change.

	finish	code no.	Euro
Single lever basin mixer for concealed installation wall-mounted with spout 22.5 cm	Chrome	71734000	208.10
	NEW Brushed Bronze	71734140	312.30
	NEW Brushed Black	71734340	312.30
	Chrome		
	NEW Matt Black	71734670	291.80
	NEW Matt White	71734700	291.80
	NEW Polished Gold Optic	71734990	312.30



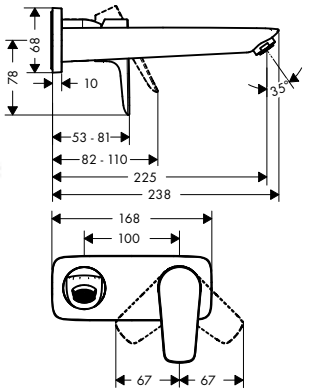

- consists of: Single lever basin mixer for concealed installation wall-mounted, waste set
- projection 225 mm
- normal spray
- flow rate at 3 bar: 5 l/min
- ceramic cartridge
- temperature limitation adjustable
- suitable for continuous flow water heaters
- non-closing waste set
- material waste set: metal
- connection dimension: DN15
- handle can be positioned on the right or left, depends on the basic set installation

Air Power · Eco Smart · Quick Clean

Alternative sizes:

· Single lever basin mixer for concealed installation wall-mounted with spout 16.5 cm	Chrome	71732000	184.30

Required parts:

· Basic set for single lever basin mixer for concealed installation wall-mounted		13622180	210.00



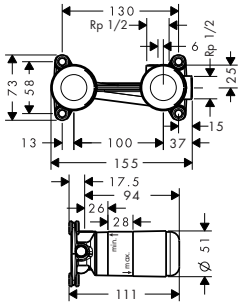

Basic set for single lever basin mixer for concealed installation wall-mounted — 13622180 — 210.00

- variable positioning of the mixer system, can be left or right of the spout
- connection dimension: DN15

Optional parts:

· Extension set 2.5 cm	31971000	104.00



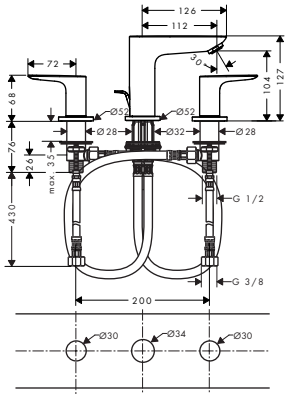

3-hole basin mixer with pop-up waste set

	Chrome	71733000	237.50
	NEW Brushed Bronze	71733140	356.40
	NEW Brushed Black	71733340	356.40
	Chrome		
	NEW Matt Black	71733670	332.80
	NEW Matt White	71733700	332.80
	NEW Polished Gold Optic	71733990	356.40

- consists of: 3-hole basin mixer, waste set
- ComfortZone 150
- projection 112 mm
- flow rate at 3 bar: 5 l/min
- ceramic valves hot/ cold 90°
- suitable for continuous flow water heaters
- pop-up waste set G 1¼
- material waste set: metal
- connection dimension: DN15

Air Power · Eco Smart · Quick Clean · Comfort Zone

Bidet



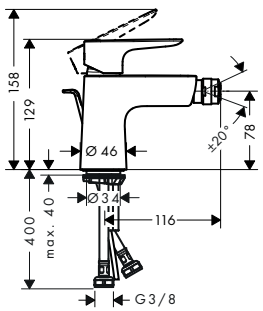

Single lever bidet mixer with pop-up waste set

	Chrome	71720000	131.20
	NEW Brushed Bronze	71720140	196.60
	NEW Brushed Black	71720340	196.60
	Chrome		
	NEW Matt Black	71720670	184.30
	NEW Matt White	71720700	184.30
	NEW Polished Gold Optic	71720990	196.60

- consists of: single lever bidet mixer, waste set
- projection 116 mm
- aerator with ball pivot
- normal spray
- flow rate at 3 bar: 5 l/min
- ceramic cartridge
- temperature limitation adjustable
- suitable for continous flow water heaters
- material waste set: metal
- connection dimension: DN15

Air Power · Quick Clean · Comfort Zone

Alternative products:

· Single lever bidet mixer with push-open waste set	Chrome	71721000	131.20

Measurements within scale drawings are in mm.

Technical specifications and units of measure are subject to change.

	finish	code no.	Euro



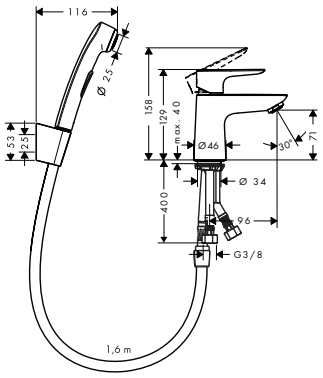

Single lever basin mixer with bidette hand shower and shower hose 160 cm
- consists of: single lever basin mixer, bidette hand shower, shower holder, shower hose, waste set
- flow rate at 3 bar: 5 l/ min
- ceramic cartridge
- temperature limitation adjustable
- suitable for continuous flow water heaters
- push-open waste set G 1¼
- material waste set: metal
- connection dimension: DN15

Chrome 71729000 195.70

Air Power · Eco Smart · Quick Clean

Bath



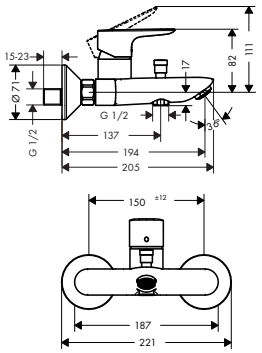

Single lever bath mixer for exposed installation
- projection 194 mm
- connection type: s-shaped connections
- centre distance: 150 ± 12 mm
- spray type mixer: normal spray
- flow rate for bath spout at 3 bar: 19 l/ min
- flow rate of hand shower at 3 bar: 17 l/ min
- ceramic cartridge
- temperature limitation adjustable
- with automatic resetting
- non-return valve
- with silencer
- suitable for continous flow water heaters
- connection dimension: DN15

	Chrome	71740000	171.90
NEW	Brushed Bronze	71740140	258.10
NEW	Brushed Black	71740340	258.10
	Chrome		
NEW	Matt Black	71740670	240.60
NEW	Matt White	71740700	240.60
NEW	Polished Gold Optic	71740990	258.10

Air Power · Quick Clean

Alternative products:
- Single lever bath mixer for exposed installation with centre distance 15.3 cm

Chrome 71741000 190.00



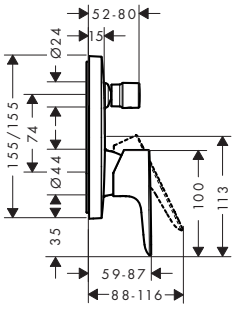

Single lever bath mixer for concealed installation
- connection type: basic set
- ceramic cartridge
- temperature limitation adjustable
- with automatic resetting
- with silencer

	Chrome	71745000	142.40
NEW	Brushed Bronze	71745140	214.00
NEW	Brushed Black	71745340	214.00
	Chrome		
NEW	Matt Black	71745670	199.70
NEW	Matt White	71745700	199.70
NEW	Polished Gold Optic	71745990	214.00

Alternative products:
- Single lever bath mixer for concealed installation with integrated security combination according to EN1717

	Chrome	71474000	250.00
	Brushed Bronze	71474140	374.80
	Brushed Black	71474340	374.80
	Chrome		
	Matt Black	71474670	350.20
NEW	Matt White	71474700	350.20
NEW	Polished Gold Optic	71474990	374.80

Required parts:
- Basic set iBox universal

NEW			
NEW		01800180	130.80
NEW			

Measurements within scale drawings are in mm.

Technical specifications and units of measure are subject to change.

	finish	code no.	Euro
 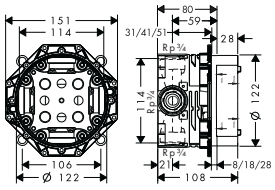 **NEW**			
Basic set iBox universal · connection thread Rp ¾ · suitable for all shower, bath tub and thermostat finish sets for concealed installation · rotationally-symmetric installation · sound-decoupled installation · connection dimension: DN20		01800180	130.80
Alternative products: · Basic set iBox universal with shut-off unit		01850180	169.90
Optional parts: · Extension iBox universal basic set 2.5 cm · Fastening rail set for iBox universal · Assembly aid for iBox universal		13595000 96615000 93500000	46.50 33.00 12.00
 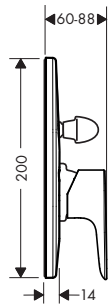			
Single lever bath mixer for concealed installation · connection type: basic set · ceramic cartridge · temperature limitation adjustable · with automatic resetting	Chrome	71746000	65.50
Required parts: · Basic set for single lever bath mixer for concealed installation		31741180	118.60
 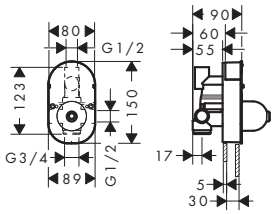			
Basic set for single lever bath mixer for concealed installation · ceramic cartridge · connection dimension: DN15		31741180	118.60
 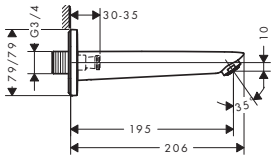			
Bath spout · with escutcheon · projection 195 mm · wall-mounted · connection dimension: DN20 · spray type: normal spray	Chrome	71410000	85.00
 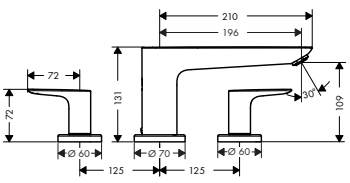			
3-hole rim mounted bath mixer · projection 196 mm · ceramic cartridge · temperature limitation adjustable · non-return valve · with silencer	Chrome	71747000	226.20
Required parts: · Basic set for 3-hole rim mounted bath mixer		13233180	179.70

Measurements within scale drawings are in mm.

Technical specifications and units of measure are subject to change.

	finish	code no.	Euro
 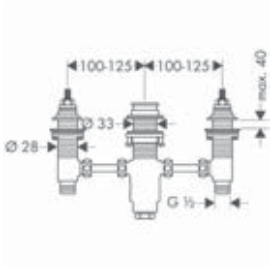		13233180	179.70

Basic set for 3-hole rim mounted bath mixer
- maintenance opening required
- connection thread: G ½
- connection dimension: DN15
- ceramic valves hot/ cold 90°

 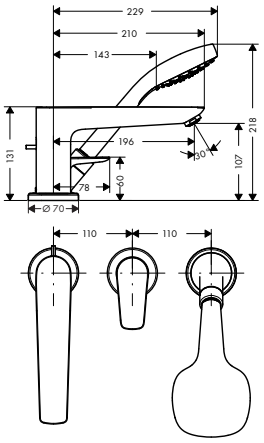	Chrome	71730000	498.70

3-hole rim mounted single lever bath mixer with Secuflex
- consists of: 3-hole rim mounted single lever bath mixer, hand shower, Secuflex hose set
- projection 196 mm
- connection type: basic set
- spray type mixer: normal spray
- spray type hand shower: Rain
- maximum pull-out length of hand shower: 1.10 m
- flow rate at 3 bar: 20 l/ min
- ceramic cartridge
- temperature limitation adjustable
- with automatic resetting
- non-return valve
- connection dimension: DN15

Consisting of:
- Hand shower 1jet (# 26814400)

Required parts:

· Basic set for 3-hole rim mounted single lever bath mixer		13437180	653.90

 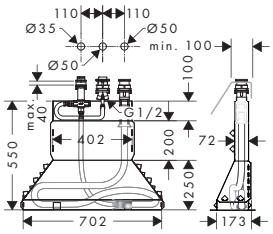		13437180	653.90

Basic set for 3-hole rim mounted single lever bath mixer
- consists of: basic set, shower hose, Secubox
- maximum pull-out length of hand shower: 1.10 m
- connection dimension: DN15

Optional parts:

· Secuflex insert extension		98806000	3.70

 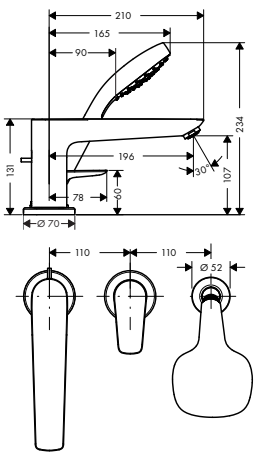	Chrome	71731000	356.30

3-hole rim mounted single lever bath mixer
- consists of: 3-hole rim mounted single lever bath mixer, hand shower
- projection 196 mm
- spray type mixer: normal spray
- flow rate at 3 bar: 20 l/ min
- ceramic cartridge
- temperature limitation adjustable
- with automatic resetting
- non-return valve
- suitable for continous flow water heaters
- connection dimension: DN15

Consisting of:
- Hand shower 1jet (# 26814400)

Required parts:

· Basic set for 3-hole rim mounted single lever bath mixer		13439180	333.40

Measurements within scale drawings are in mm.

Technical specifications and units of measure are subject to change.

	finish	code no.	Euro
Basic set for 3-hole rim mounted single lever bath mixer · consists of: basic set, shower holder, shower hose · maintenance opening required · ceramic cartridge		13439180	333.40



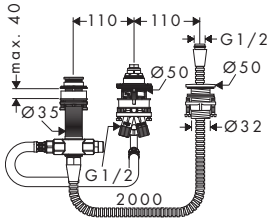

4-hole rim mounted bath mixer · consists of: 4-hole rim mounted bath mixer, hand shower, shower hose · projection 196 mm · flow rate at 3 bar: 22 l/ min · non-return valve · connection dimension: DN15				
		Chrome	71748000	356.30
	NEW	Brushed Bronze	71748140	534.50
	NEW	Brushed Black Chrome	71748340	534.50
	NEW	Matt Black	71748670	498.70
	NEW	Matt White	71748700	498.70
	NEW	Polished Gold Optic	71748990	534.50

Air Power | Quick Clean



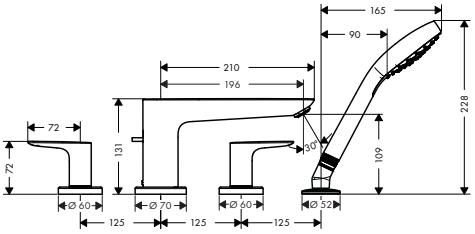

Consisting of:
· Hand shower 1jet (# 26814400)

Required parts: · Basic set for 4-hole rim mounted bath mixer			
		13244180	275.20

Basic set for 4-hole rim mounted bath mixer · consists of: basic set, shower holder, shower hose · maintenance opening required · suitable for 4-hole rim mounted bath mixer · connection thread: G ½ · connection dimension: DN15 · ceramic valves hot/ cold 90°			
		13244180	275.20



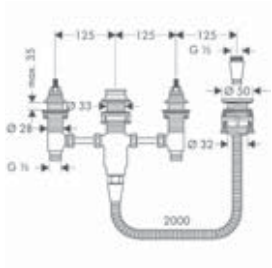

Shower

Single lever shower mixer for exposed installation · connection type: s-shaped connections · centre distance: 150 ± 12 mm · flow rate of hand shower at 3 bar: 17 l/ min · ceramic cartridge · temperature limitation adjustable · non-return valve · with silencer · hose connection DN15 · connection dimension: DN15				
		Chrome	71760000	148.20
	NEW	Brushed Bronze	71760140	222.20
	NEW	Brushed Black Chrome	71760340	222.20
	NEW	Matt Black	71760670	207.90
	NEW	Matt White	71760700	207.90
	NEW	Polished Gold Optic	71760990	222.20



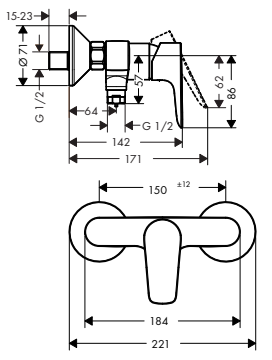

Alternative products:

· Single lever shower mixer for exposed installation with centre distance 15.3 cm	Chrome	71761000	166.30

		finish	code no.	Euro
	**Single lever shower mixer for concealed installation** · 1 outlet · connection type: basic set · ceramic cartridge · temperature limitation adjustable	Chrome	71765000	118.80
		NEW Brushed Bronze	71765140	178.20
		NEW Brushed Black Chrome	71765340	178.20
		NEW Matt Black	71765670	165.90
		NEW Matt White	71765700	165.90
		NEW Polished Gold Optic	71765990	178.20
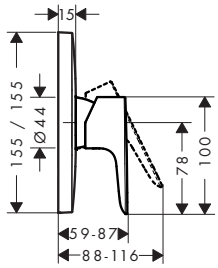	**Alternative products:** · Single lever shower mixer HighFlow for concealed installation	Chrome	71768000	118.80
	Required parts: · Basic set iBox universal		01800180	130.80
	**Basic set iBox universal** · connection thread Rp ¾ · suitable for all shower, bath tub and thermostat finish sets for concealed installation · rotationally-symmetric installation · sound-decoupled installation · connection dimension: DN20		01800180	130.80
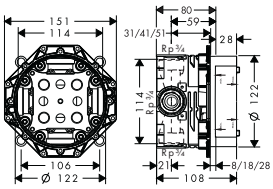	**Alternative products:** · Basic set iBox universal with shut-off unit		01850180	169.90
NEW	**Optional parts:** · Extension iBox universal basic set 2.5 cm · Fastening rail set for iBox universal · Assembly aid for iBox universal		13595000 96615000 93500000	46.50 33.00 12.00
	**Single lever shower mixer for concealed installation** · 1 outlet · connection type: basic set · flow rate at 3 bar: 28.7 l/ min · min. operating pressure: 1 bar · max. operating pressure: 10 bar	Chrome	71764000	47.50
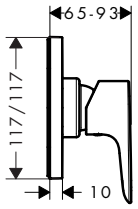	**Required parts:** · Basic set for single lever shower mixer for concealed installation		13620180	105.30
	**Single lever shower mixer for concealed installation** · connection type: basic set · flow rate at 3 bar: 28.7 l/ min · min. operating pressure: 1 bar · max. operating pressure: 10 bar	Chrome	71766000	47.50
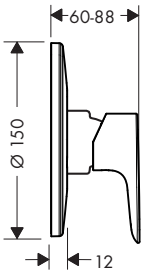	**Required parts:** · Basic set for single lever shower mixer for concealed installation		13620180	105.30
	**Basic set for single lever shower mixer for concealed installation** · ceramic cartridge · connection dimension: DN15		13620180	105.30
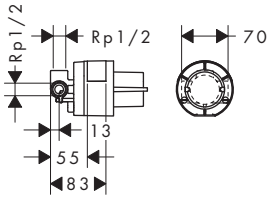				

Measurements within scale drawings are in mm.

Technical specifications and units of measure are subject to change.

Possible combinations Talis Select S / Talis S

Basin


no.72115000*


no.72105000


no.72044000*


no.72031000*


no.72113000*


no.72042000*


no.72020000*


no.72040000*


no.72010000*


no.72017000


no.72111000*

Bath


no.72400000*


no.72405000*


no.72419000


no.72412000


no.15743000


no.15758000


no.13114000

Shower


no.72600000*


no.72605000*


no.13116000


no.15744000


no.15757000


no.26800400*


no.26522000, -400*


no.26570400*


no.27253400*

Accessories/kitchen mixers


no.40514000


no.40523000


no.40522000


no.72810000*


no.01800180

* as an example

Basin

	finish	code no.	Euro
Basin mixer 100 with pop-up waste set · consists of: Basin mixer, waste set · ComfortZone 100 · projection 93 mm · normal spray · flow rate at 3 bar: 5 l/ min · Select cartridge with temperature control · temperature limitation adjustable · suitable for continuous flow water heaters · pop-up waste set G 1¼ · material waste set: metal · connection dimension: DN15	Chrome	72042000	213.80
Alternative products: · Basin mixer 100 without waste set	Chrome	72043000	208.10



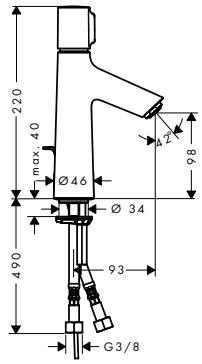

	finish	code no.	Euro
Basin mixer 80 with pop-up waste set · consists of: Basin mixer, waste set · ComfortZone 80 · projection 97 mm · normal spray · flow rate at 3 bar: 5 l/ min · Select cartridge with temperature control · temperature limitation adjustable · suitable for continuous flow water heaters · pop-up waste set G 1¼ · material waste set: metal · connection dimension: DN15	Chrome	72040000	178.70
Alternative products: · Basin mixer 80 without waste set	Chrome	72041000	171.90



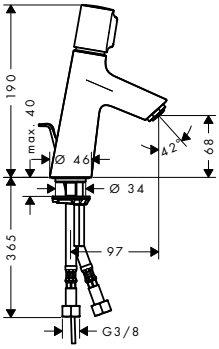

	finish	code no.	Euro
Basin mixer 190 with pop-up waste set · consists of: Basin mixer, waste set · ComfortZone 190 · projection 131 mm · normal spray · flow rate at 3 bar: 5 l/ min · Select cartridge with temperature control · temperature limitation adjustable · suitable for continuous flow water heaters · pop-up waste set G 1¼ · material waste set: metal · connection dimension: DN15	Chrome	72044000	285.00
Alternative products: · Basin mixer 190 without waste set	Chrome	72045000	287.40



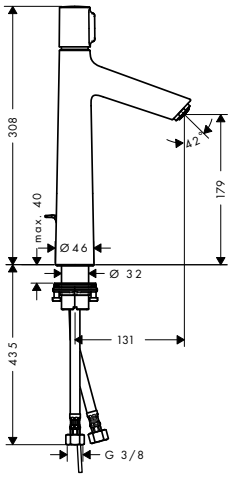

Measurements within scale drawings are in mm.

Technical specifications and units of measure are subject to change.

	finish	code no.	Euro



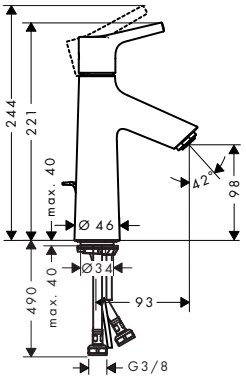

Single lever basin mixer 100 with pop-up waste set
- consists of: single lever basin mixer, waste set
- ComfortZone 100
- projection 93 mm
- normal spray
- flow rate at 3 bar: 5 l/min
- ceramic cartridge
- temperature limitation adjustable
- suitable for continuous flow water heaters
- pop-up waste set G 1¼
- material waste set: metal
- connection dimension: DN15

Chrome — 72020000 — 155.00

Air Power · Eco Smart · Quick Clean · Comfort Zone

Alternative products:
- Single lever basin mixer 100 without waste set — Chrome — 72021000 — 148.20
- Single lever basin mixer 100 LowFlow without waste set — Chrome — 72025000 — 148.20



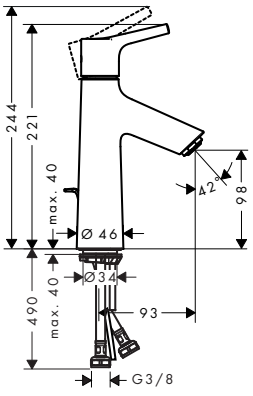

Single lever basin mixer 100 CoolStart with pop-up waste set
- consists of: single lever basin mixer, waste set
- ComfortZone 100
- projection 93 mm
- normal spray
- flow rate at 3 bar: 5 l/min
- ceramic cartridge
- temperature limitation adjustable
- suitable for continuous flow water heaters
- pop-up waste set G 1¼
- material waste set: metal
- connection dimension: DN15
- cold water in middle position

Chrome — 72022000 — 155.00

Air Power · Eco Smart · Quick Clean · Comfort Zone · Cool Start

Alternative products:
- Single lever basin mixer 100 CoolStart without waste set — Chrome — 72023000 — 148.20



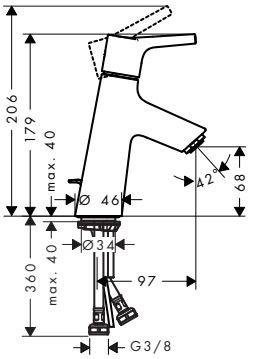

Single lever basin mixer 80 with pop-up waste set
- consists of: single lever basin mixer, waste set
- ComfortZone 80
- projection 97 mm
- normal spray
- flow rate at 3 bar: 5 l/min
- ceramic cartridge
- temperature limitation adjustable
- suitable for continuous flow water heaters
- pop-up waste set G 1¼
- material waste set: metal
- connection dimension: DN15

Chrome — 72010000 — 131.20

Air Power · Eco Smart · Quick Clean · Comfort Zone

Alternative products:
- Single lever basin mixer 80 with push-open waste set — Chrome — 72011000 — 131.20
- Single lever basin mixer 80 without waste set — Chrome — 72012000 — 124.40
- Single lever basin mixer 80 LowFlow without waste set — Chrome — 72018000 — 124.40

Measurements within scale drawings are in mm.

Technical specifications and units of measure are subject to change.

	finish	code no.	Euro



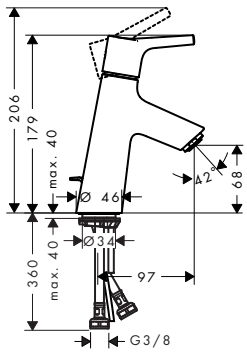

Single lever basin mixer 80 CoolStart with pop-up waste set
- consists of: single lever basin mixer, waste set
- ComfortZone 80
- projection 97 mm
- normal spray
- flow rate at 3 bar: 5 l/min
- ceramic cartridge
- temperature limitation adjustable
- suitable for continuous flow water heaters
- pop-up waste set G 1¼
- material waste set: metal
- connection dimension: DN15
- cold water in middle position

Chrome — 72013000 — 131.20

Air Power · Eco Smart · Quick Clean · Comfort Zone · Cool Start

Alternative products:
- Single lever basin mixer 80 CoolStart without waste set

Chrome — 72014000 — 124.40



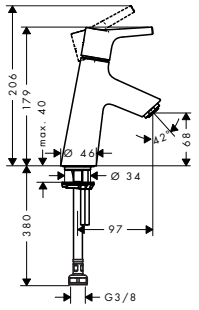

Pillar tap 80 for cold water
- ComfortZone 80
- projection 97 mm
- normal spray
- flow rate at 3 bar: 5 l/min
- ceramic cartridge
- for cold water connection
- connection dimension: DN15

Chrome — 72017000 — 118.80

Air Power · Eco Smart · Quick Clean · Comfort Zone



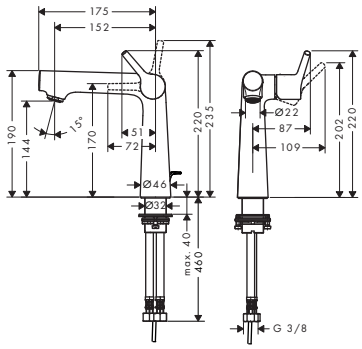

Single lever basin mixer 140 with pop-up waste set
- consists of: single lever basin mixer, waste set
- ComfortZone 140
- projection 152 mm
- normal spray
- flow rate at 3 bar: 5 l/min
- ceramic cartridge
- temperature limitation adjustable
- suitable for continuous flow water heaters
- pop-up waste set G 1¼
- material waste set: metal
- connection dimension: DN15

Chrome — 72113000 — 416.30

Air Power · Eco Smart · Quick Clean · Comfort Zone



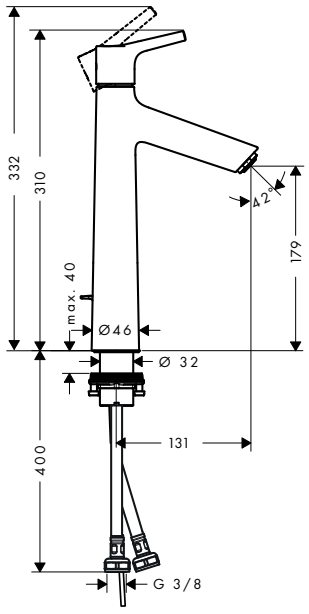

Single lever basin mixer 190 with pop-up waste set
- consists of: single lever basin mixer, waste set
- ComfortZone 190
- projection 131 mm
- normal spray
- flow rate at 3 bar: 5 l/min
- ceramic cartridge
- temperature limitation adjustable
- suitable for continuous flow water heaters
- pop-up waste set G 1¼
- material waste set: metal
- connection dimension: DN15

Chrome — 72031000 — 237.50

Air Power · Eco Smart · Quick Clean · Comfort Zone

Alternative products:
- Single lever basin mixer 190 without waste set

Chrome — 72032000 — 231.80

Measurements within scale drawings are in mm.

Technical specifications and units of measure are subject to change.

	finish	code no.	Euro

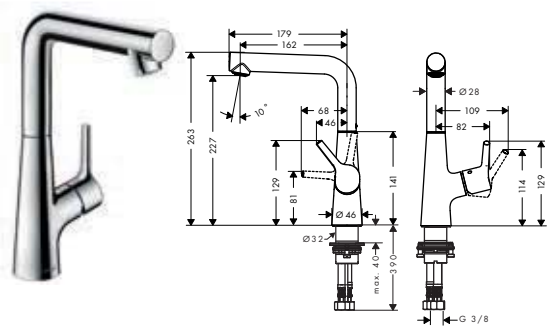

Single lever basin mixer 210 with swivel spout and pop-up waste set
- consists of: single lever basin mixer, waste set
- ComfortZone 210
- projection 162 mm
- swivel range 120°
- normal spray
- flow rate at 3 bar: 5 l/min
- ceramic cartridge
- temperature limitation adjustable
- suitable for continuous flow water heaters
- pop-up waste set G 1¼
- material waste set: metal
- connection dimension: DN15

Chrome — 72105000 — 261.20

Air Power · Eco Smart · Quick Clean · Comfort Zone

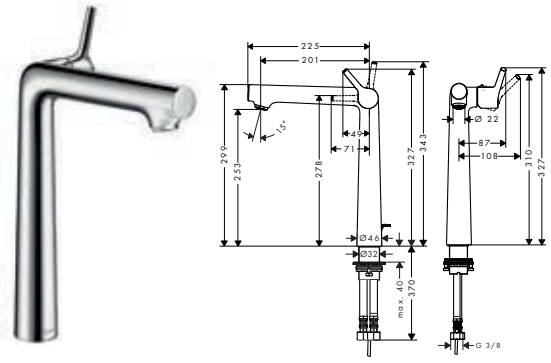

Single lever basin mixer 250 with pop-up waste set
- consists of: single lever basin mixer, waste set
- ComfortZone 250
- projection 201 mm
- normal spray
- flow rate at 3 bar: 5 l/min
- ceramic cartridge
- temperature limitation adjustable
- suitable for continuous flow water heaters
- pop-up waste set G 1¼
- material waste set: metal
- connection dimension: DN15

Chrome — 72115000 — 511.20

Air Power · Eco Smart · Quick Clean · Comfort Zone

Alternative products:
- Single lever basin mixer 250 without waste set

Chrome — 72116000 — 504.30



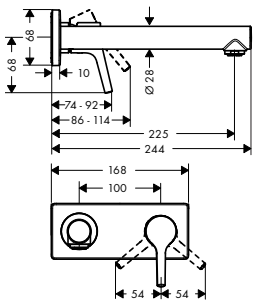

Single lever basin mixer for concealed installation wall-mounted with spout 22.5 cm
- consists of: Single lever basin mixer for concealed installation wall-mounted, waste set
- projection 225 mm
- normal spray
- flow rate at 3 bar: 5 l/min
- ceramic cartridge
- temperature limitation adjustable
- suitable for continuous flow water heaters
- non-closing waste set
- material waste set: metal
- connection dimension: DN15
- handle can be positioned on the right or left, depends on the basic set installation

Chrome — 72111000 — 226.20

Air Power · Eco Smart · Quick Clean

Alternative sizes:
- Single lever basin mixer for concealed installation wall-mounted with spout 16.5 cm

Chrome — 72110000 — 202.60

Required parts:
- Basic set for single lever basin mixer for concealed installation wall-mounted

13622180 — 210.00



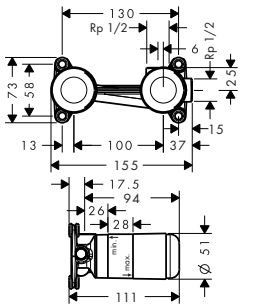

Basic set for single lever basin mixer for concealed installation wall-mounted
- variable positioning of the mixer system, can be left or right of the spout
- connection dimension: DN15

13622180 — 210.00

Optional parts:
- Extension set 2.5 cm

31971000 — 104.00

Measurements within scale drawings are in mm.

Technical specifications and units of measure are subject to change.

Bidet

	finish	code no.	Euro
Bidet mixer with pop-up waste set · consists of: Bidet mixer, waste set · projection 126 mm · aerator with ball pivot · normal spray · flow rate at 3 bar: 5 l/ min · Select cartridge with temperature control · temperature limitation adjustable · suitable for continous flow water heaters · material waste set: metal · connection dimension: DN15	Chrome	72202000	202.60



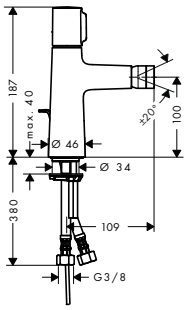

Basin mixer 100 with bidette hand shower and shower hose 160 cm · consists of: Basin mixer, bidette hand shower, shower holder, shower hose, waste set · flow rate at 3 bar: 5 l/ min · ceramic cartridge · temperature limitation adjustable · suitable for continuous flow water heaters · push-open waste set G 1¼ · material waste set: synthetic · connection dimension: DN15	Chrome	72291000	250.00



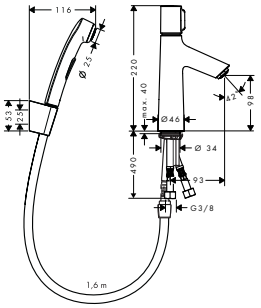

Single lever bidet mixer with pop-up waste set · consists of: single lever bidet mixer, waste set · projection 109 mm · aerator with ball pivot · normal spray · flow rate at 3 bar: 5 l/ min · ceramic cartridge · temperature limitation adjustable · suitable for continous flow water heaters · material waste set: metal · connection dimension: DN15	Chrome	72200000	155.00



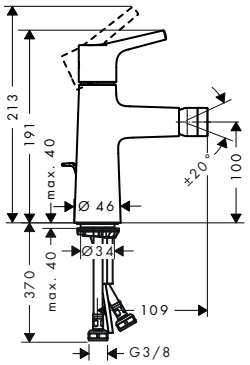

Single lever basin mixer with bidette hand shower and shower hose 160 cm · consists of: single lever basin mixer, bidette hand shower, shower holder, shower hose, waste set · flow rate at 3 bar: 5 l/ min · ceramic cartridge · temperature limitation adjustable · suitable for continuous flow water heaters · push-open waste set G 1¼ · material waste set: synthetic · connection dimension: DN15	Chrome	72290000	202.60



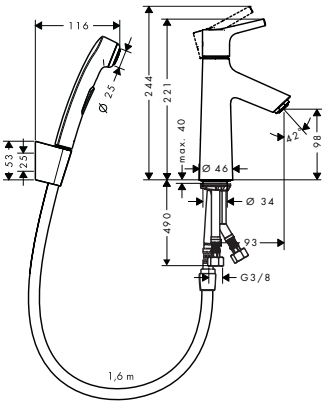

Measurements within scale drawings are in mm.

Technical specifications and units of measure are subject to change.

Bath

	finish	code no.	Euro
 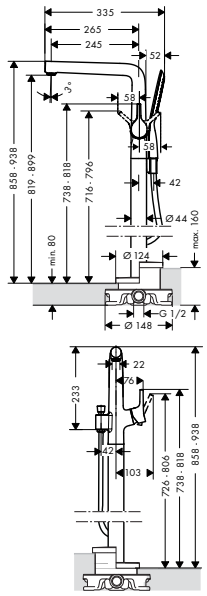			
Single lever bath mixer floor-standing · consists of: single lever bath mixer floor standing, baton hand shower, shower hose, shower holder · projection 245 mm · connection type: basic set · spray type mixer: normal spray · spray type hand shower: Rain, MonoRain · flow rate at 3 bar: 20 l/ min · ceramic cartridge · with automatic resetting · non-return valve · connection dimension: DN15	Chrome	72412000	1,492.80
Consisting of: · Shower hose 125 cm (# 28272XXX)			
Required parts:			
· Basic set for mixers floor-standing		10452180	437.90
· Sealing foil for basic set bath mixer floor-standing		96441000	117.40
 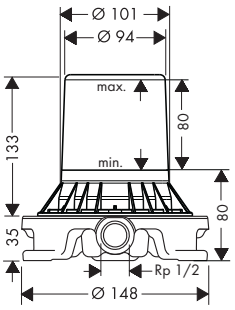			
Basic set for mixers floor-standing · for mounting on unfinished floor · suitable for single lever bath mixer, single lever basin mixer and bath spout floor-standing · connection dimension: DN15		10452180	437.90
Optional parts:			
· Sealing foil for basic set bath mixer floor-standing		96441000	117.40
 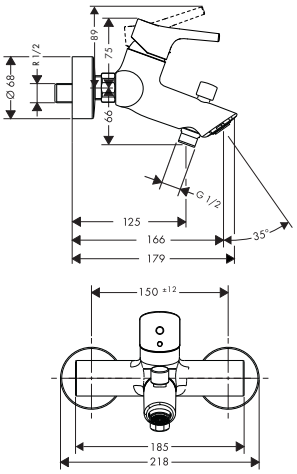			
Single lever bath mixer for exposed installation · projection 166 mm · connection type: s-shaped connections · centre distance: 150 ± 12 mm · spray type mixer: normal spray · flow rate for bath spout at 3 bar: 20 l/ min · flow rate of hand shower at 3 bar: 14 l/ min · ceramic cartridge · temperature limitation adjustable · with automatic resetting · intrinsically safe against backflow · with silencer · suitable for continous flow water heaters · connection dimension: DN15	Chrome	72400000	195.70
Alternative products:			
· Single lever bath mixer for exposed installation with centre distance 15.3 cm	Chrome	72401000	213.80

Measurements within scale drawings are in mm.

		finish	code no.	Euro
	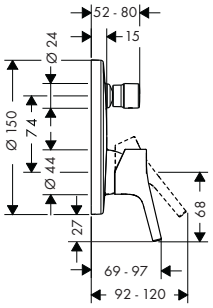			
	Single lever bath mixer for concealed installation · connection type: basic set · ceramic cartridge · temperature limitation adjustable · with automatic resetting · with silencer	Chrome	72405000	160.60
	Alternative products: · Single lever bath mixer for concealed installation with integrated security combination according to EN1717	Chrome	72406000	273.70
	Required parts: · Basic set iBox universal		01800180	130.80
	Optional parts: · Extension element 15 cm	Chrome	13597000	44.10
	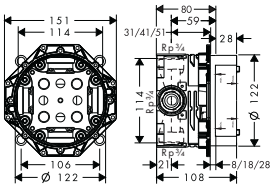			
	Basic set iBox universal · connection thread Rp ¾ · suitable for all shower, bath tub and thermostat finish sets for concealed installation · rotationally-symmetric installation · sound-decoupled installation · connection dimension: DN20		01800180	130.80
	Alternative products: · Basic set iBox universal with shut-off unit		01850180	169.90
	Optional parts: · Extension iBox universal basic set 2.5 cm · Fastening rail set for iBox universal · Assembly aid for iBox universal		13595000 96615000 93500000	46.50 33.00 12.00
	NEW			
	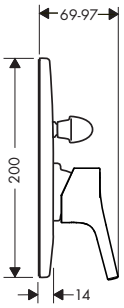			
	Single lever bath mixer for concealed installation · connection type: basic set · ceramic cartridge · min. operating pressure: 1 bar · max. operating pressure: 10 bar · temperature limitation adjustable · with automatic resetting	Chrome	72407000	71.30
	Required parts: · Basic set for single lever bath mixer for concealed installation		31741180	118.60
	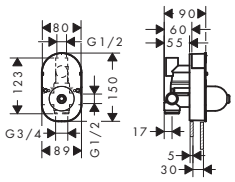			
	Basic set for single lever bath mixer for concealed installation · ceramic cartridge · connection dimension: DN15		31741180	118.60
	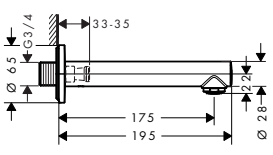			
	Bath spout · with silencer · with escutcheon · projection 175 mm · wall-mounted · connection dimension: DN20 · spray type: normal spray	Chrome	72410000	100.80

Measurements within scale drawings are in mm.

Technical specifications and units of measure are subject to change.

	finish	code no.	Euro
 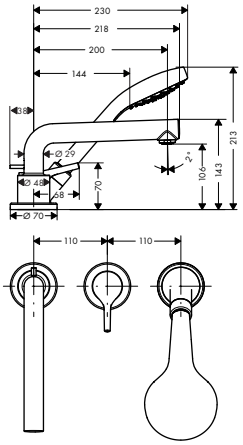			
3-hole rim mounted single lever bath mixer with Secuflex · consists of: 3-hole rim mounted single lever bath mixer, hand shower, Secuflex hose set · projection 200 mm · spray type mixer: normal spray · spray type hand shower: Rain · maximum pull-out length of hand shower: 1.10 m · flow rate at 3 bar: 22 l/min · ceramic cartridge · temperature limitation adjustable · connection dimension: DN15 **Consisting of:** · Hand shower 1jet (# 26804400) **Required parts:** · Basic set for 3-hole rim mounted single lever bath mixer	Chrome	72416000 13437180	534.80 653.90
 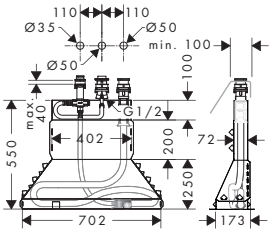			
Basic set for 3-hole rim mounted single lever bath mixer · consists of: basic set, shower hose, Secubox · maximum pull-out length of hand shower: 1.10 m · connection dimension: DN15 **Optional parts:** · Secuflex insert extension		13437180 98806000	653.90 3.70
 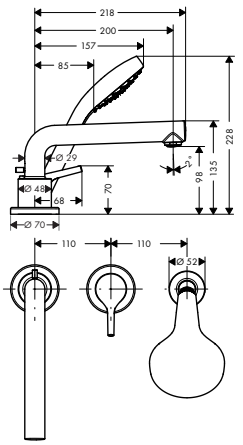			
3-hole rim mounted single lever bath mixer · consists of: 3-hole rim mounted single lever bath mixer, hand shower, shower holder · projection 200 mm · spray type mixer: normal spray · spray type hand shower: Rain · flow rate at 3 bar: 22 l/min · ceramic cartridge · temperature limitation adjustable · connection dimension: DN15 **Consisting of:** · Hand shower 1jet (# 26804400) **Required parts:** · Basic set for 3-hole rim mounted single lever bath mixer	Chrome	72417000 13439180	385.60 333.40
 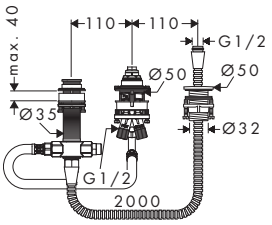			
Basic set for 3-hole rim mounted single lever bath mixer · consists of: basic set, shower holder, shower hose · maintenance opening required · ceramic cartridge		13439180	333.40

Measurements within scale drawings are in mm.

Technical specifications and units of measure are subject to change.

	finish	code no.	Euro



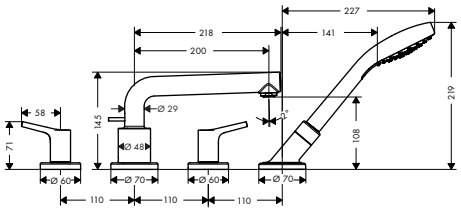

4-hole rim mounted bath mixer with Secuflex — Chrome — 72418000 — 534.80

Air Power · Quick Clean

- consists of: 4-hole rim mounted bath mixer, hand shower, shower hose, shower holder
- projection 200 mm
- connection type: basic set
- spray type mixer: normal spray
- spray type hand shower: Rain
- maximum pull-out length of hand shower: 1.10 m
- flow rate at 3 bar: 22 l/ min
- ceramic valves hot/ cold 90°
- min. operating pressure: 1 bar
- max. operating pressure: 10 bar
- non-return valve
- connection dimension: DN15

Consisting of:
- Hand shower 1jet (# 26804400)

Required parts:
- Basic set for 4-hole rim mounted bath mixer — 13444180 — 798.10



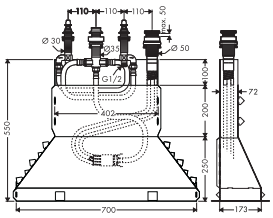

Basic set for 4-hole rim mounted bath mixer — 13444180 — 798.10

- consists of: basic set, shower hose, Secubox
- maximum pull-out length of hand shower: 1.10 m
- connection dimension: DN15

Optional parts:
- Secuflex insert extension — 98806000 — 3.70



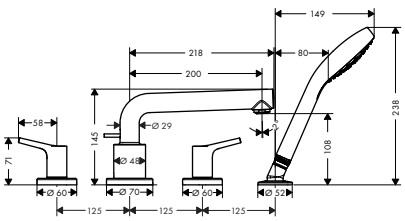

4-hole rim mounted bath mixer — Chrome — 72419000 — 385.60

Air Power · Quick Clean

- consists of: 4-hole rim mounted bath mixer, hand shower, shower hose, shower holder
- projection 200 mm
- flow rate at 3 bar: 22 l/ min
- non-return valve
- connection dimension: DN15
- with integrated safety combination EN1717

Consisting of:
- Hand shower 1jet (# 26804400)

Required parts:
- Basic set for 4-hole rim mounted bath mixer — 13244180 — 275.20



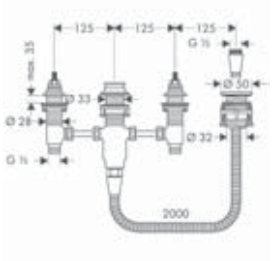

Basic set for 4-hole rim mounted bath mixer — 13244180 — 275.20

- consists of: basic set, shower holder, shower hose
- maintenance opening required
- suitable for 4-hole rim mounted bath mixer
- connection thread: G ½
- connection dimension: DN15
- ceramic valves hot/ cold 90°

Measurements within scale drawings are in mm.

Technical specifications and units of measure are subject to change.

Shower

	finish	code no.	Euro
 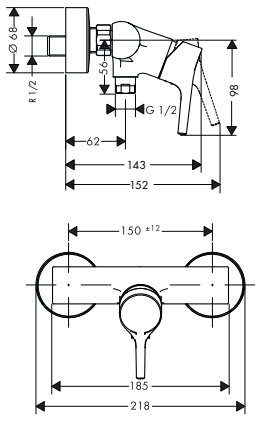			
Single lever shower mixer for exposed installation · connection type: s-shaped connections · centre distance: 150 ± 12 mm · flow rate of hand shower at 3 bar: 14 l/min · ceramic cartridge · min. operating pressure: 1 bar · max. operating pressure: 10 bar · temperature limitation adjustable · non-return valve · with silencer · hose connection DN15 · connection dimension: DN15	Chrome	72600000	155.00
Alternative products:			
· Single lever shower mixer for exposed installation with centre distance 15.3 cm	Chrome	72601000	166.30
 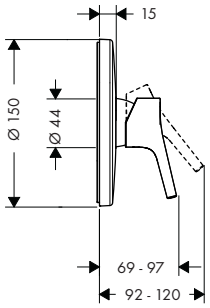			
Single lever shower mixer for concealed installation · 1 outlet · connection type: basic set · ceramic cartridge · temperature limitation adjustable	Chrome	72605000	142.40
Required parts:			
· Basic set iBox universal		01800180	130.80
Optional parts:			
· Extension element 15 cm	Chrome	13597000	44.10
 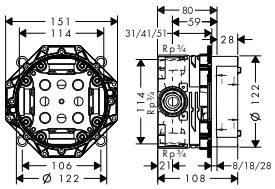			
Basic set iBox universal · connection thread Rp ¾ · suitable for all shower, bath tub and thermostat finish sets for concealed installation · rotationally-symmetric installation · sound-decoupled installation · connection dimension: DN20		01800180	130.80
Alternative products:			
· Basic set iBox universal with shut-off unit		01850180	169.90
Optional parts:			
· Extension iBox universal basic set 2.5 cm		13595000	46.50
· Fastening rail set for iBox universal		96615000	33.00
· Assembly aid for iBox universal		93500000	12.00
NEW			
 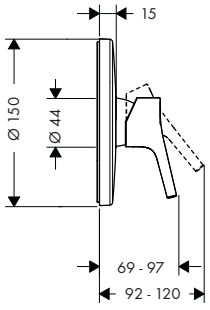			
Single lever shower mixer for concealed installation · connection type: basic set	Chrome	72606000	47.50
Required parts:			
· Basic set for single lever shower mixer for concealed installation		13620180	105.30
 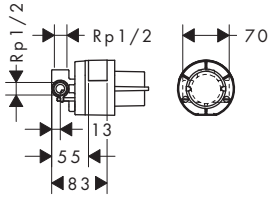			
Basic set for single lever shower mixer for concealed installation · ceramic cartridge · connection dimension: DN15		13620180	105.30

Measurements within scale drawings are in mm.

Possible combinations Talis S

Basin


no.32070000*


no.32020000*


no.13132000

Bath


no.32420000


no.32475000*


no.13141000, -400


no.13114000


no.15721000*

Shower


no.32620000


no.32675000


no.13161000, -400


no.13116000


no.15701000*


no.28536000*


no.26464000*


no.27774000*


no.27185000

Accessories


no.40514000


no.40523000


no.40522000


no.01800180

* as an example

Basin



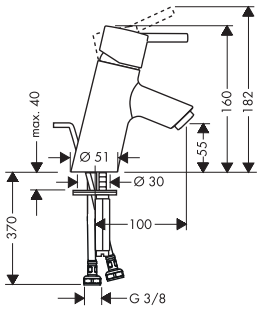

Single lever basin mixer with pop-up waste set
- consists of: single lever basin mixer, waste set
- ComfortZone 70
- projection 100 mm
- normal spray
- flow rate at 3 bar: 5 l/min
- ceramic cartridge
- temperature limitation adjustable
- suitable for continuous flow water heaters
- pop-up waste set G 1¼
- material waste set: metal
- connection dimension: DN15

finish: Chrome | code no.: 32020000 | Euro: 197.60

Alternative products:
- Single lever basin mixer without waste set — Chrome — 32031000 — 189.20
- Single lever basin mixer for vented hot water cylinder with pop-up waste set — Chrome — 32032000 — 256.30



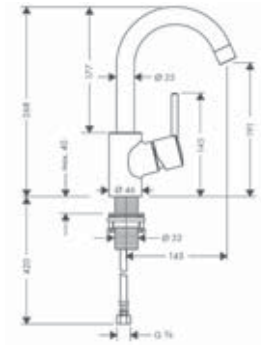

Single lever basin mixer with swivel spout and pop-up waste set
- consists of: single lever basin mixer, waste set
- ComfortZone 200
- projection 145 mm
- swivel range 360°
- normal spray
- flow rate at 3 bar: 5 l/min
- ceramic cartridge
- temperature limitation adjustable
- suitable for continuous flow water heaters
- pop-up waste set G 1¼
- material waste set: metal
- connection dimension: DN15
- handle position on the side: bottom-side at the base body (not suitable for wash bowls)

Chrome | 32070000 | 295.70



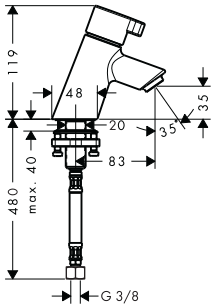

Pillar tap 40 without waste set
- ComfortZone 40
- projection 83 mm
- normal spray
- flow rate at 3 bar: 5 l/min
- ceramic valves 90°
- for cold water connection
- connection dimension: DN15

Chrome | 13132000 | 136.90

Bath



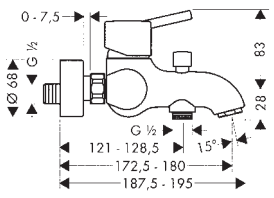

Single lever bath mixer for exposed installation
- projection 172.5 - 180 mm
- connection type: s-shaped connections
- centre distance: 150 ± 12 mm
- spray type mixer: normal spray
- flow rate for bath spout at 3 bar: 18 l/min
- flow rate of hand shower at 3 bar: 19 l/min
- ceramic cartridge
- min. operating pressure: 1 bar
- max. operating pressure: 10 bar
- temperature limitation adjustable
- with automatic resetting
- non-return valve
- with silencer
- suitable for continous flow water heaters
- connection dimension: DN15

Chrome | 32420000 | 250.20

Measurements within scale drawings are in mm.

	finish	code no.	Euro
 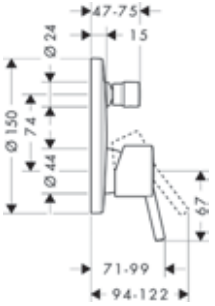			
Single lever bath mixer for concealed installation · connection type: basic set · ceramic cartridge · min. operating pressure: 1 bar · max. operating pressure: 10 bar · temperature limitation adjustable · with automatic resetting · with silencer	Chrome	32475000	170.30
Alternative products: · Single lever bath mixer for concealed installation with integrated security combination according to EN1717	Chrome	32477000	303.30
Required parts: · Basic set iBox universal		01800180	130.80
Optional parts: · Extension element 15 cm	Chrome	13597000	44.10
 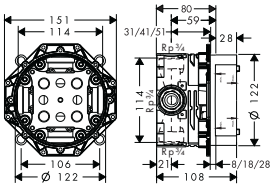			
Basic set iBox universal · connection thread Rp ¾ · suitable for all shower, bath tub and thermostat finish sets for concealed installation · rotationally-symmetric installation · sound-decoupled installation · connection dimension: DN20		01800180	130.80
Alternative products: · Basic set iBox universal with shut-off unit		01850180	169.90
Optional parts: · Extension iBox universal basic set 2.5 cm · Fastening rail set for iBox universal · Assembly aid for iBox universal		13595000 96615000 93500000	46.50 33.00 12.00
NEW			
 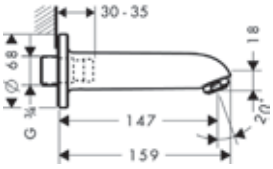			
Bath spout · with silencer · with escutcheon · projection 147 mm · wall-mounted · flow rate: 32 l/min · connection dimension: DN20	Chrome	13414000	103.90
 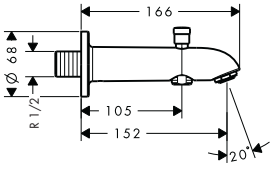			
Bath spout 15.2 cm with diverter valve · connection type: G ½ · with automatic resetting · with escutcheon · with integrated safety combination EN1717 · projection 152 mm · wall-mounted · flow rate: 25 l/min · connection dimension: DN15 · intrinsically safe against backflow	Chrome	13423000	106.30
Alternative sizes: · Bath spout 22.8 cm with diverter valve	Chrome	13424000	115.20

Measurements within scale drawings are in mm.

Technical specifications and units of measure are subject to change.

Shower

	finish	code no.	Euro
 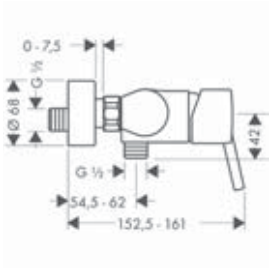			
Single lever shower mixer for exposed installation · 1 outlet · connection type: s-shaped connections · centre distance: 150 ± 12 mm · flow rate of hand shower at 3 bar: 16 l/min · ceramic cartridge · min. operating pressure: 1 bar · max. operating pressure: 10 bar · temperature limitation adjustable · non-return valve · with silencer · hose connection DN15 · connection dimension: DN15	Chrome	32620000	200.00
 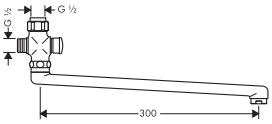			
Long swivel spout 30 cm · with automatic resetting · for installation on single lever shower mixer · length 300 mm · connection dimension DN15	Chrome	14495000	93.60
 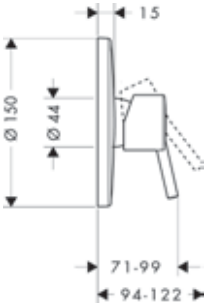			
Single lever shower mixer for concealed installation · 1 outlet · connection type: basic set · ceramic cartridge · min. operating pressure: 1 bar · max. operating pressure: 10 bar · temperature limitation adjustable	Chrome	32675000	158.70
Required parts:			
· Basic set iBox universal		01800180	130.80
Optional parts:			
· Extension element 15 cm	Chrome	13597000	44.10
 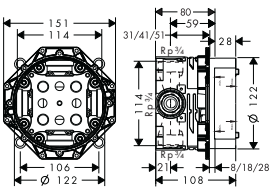			
Basic set iBox universal · connection thread Rp ¾ · suitable for all shower, bath tub and thermostat finish sets for concealed installation · rotationally-symmetric installation · sound-decoupled installation · connection dimension: DN20		01800180	130.80
Alternative products:			
· Basic set iBox universal with shut-off unit		01850180	169.90
Optional parts:			
· Extension iBox universal basic set 2.5 cm		13595000	46.50
· Fastening rail set for iBox universal		96615000	33.00
· Assembly aid for iBox universal		93500000	12.00

NEW

Measurements within scale drawings are in mm.

Technical specifications and units of measure are subject to change.

Focus®



Basin	page 355		Focus Care	page 356	
Bidet	page 360		Bath	page 361	
Shower	page 364				

Possible combinations Focus

Focus

Basin


no.31609000*


no.31531000*


no.31608000*


no.31607000*


no.31730000*


no.31171000*

Bath


no.31940000


no.31945000*


no.13141000, -400


no.13114000


no.15758000*

Shower


no.31960000


no.31965000


no.13161000, -400


no.13116000


no.26656400*


no.27264400*


no.31572000*


no.26823400*


no.26577000, -400*

Accessories


no.40514000


no.40523000


no.40522000


no.01800180

* as an example

Basin



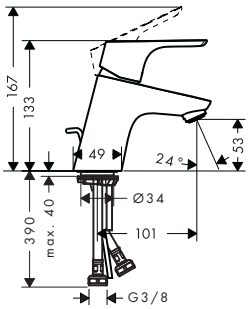

Single lever basin mixer 70 with pop-up waste set

finish: Chrome | code no.: 31730000 | Euro: 105.30

Air Power · Eco Smart · Quick Clean · Comfort Zone

- consists of: single lever basin mixer, waste set
- ComfortZone 70
- projection 101 mm
- normal spray
- flow rate at 3 bar: 5 l/min
- ceramic cartridge
- temperature limitation adjustable
- suitable for continuous flow water heaters
- pop-up waste set G 1¼
- material waste set: metal
- connection dimension: DN15

Alternative products:

	finish	code no.	Euro
· Single lever basin mixer 70 with push-open waste set	Chrome	31604000	105.30
· Single lever basin mixer 70 with chain	Chrome	31732000	98.00
· Single lever basin mixer 70 without waste set	Chrome	31733000	98.00
· Single lever basin mixer 70 for vented hot water cylinders with pop-up waste set	Chrome	31132000	168.40
· Single lever basin mixer 70 LowFlow with pop-up waste set	Chrome	31951000	101.50
· Single lever basin mixer 70 LowFlow without waste set	Chrome	31952000	94.40



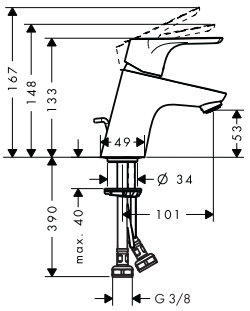

Single lever basin mixer 70 with 2 flow rates with pop-up waste set

Chrome | 31738000 | 105.30

Air Power · Eco Smart · Quick Clean · Comfort Zone · Cool Start

- consists of: single lever basin mixer, waste set
- ComfortZone 70
- projection 101 mm
- normal spray
- ceramic cartridge with 2 flow rates
- temperature limitation adjustable
- suitable for continuous flow water heaters
- pop-up waste set G 1¼
- material waste set: metal
- connection dimension: DN15
- cold water in middle position



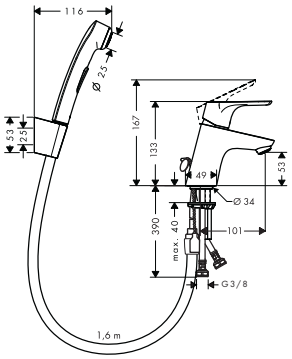

Single lever basin mixer 70 with bidette hand shower and shower hose 160 cm

Chrome | 31926000 | 122.80

Air Power · Eco Smart · Quick Clean

- consists of: single lever basin mixer, bidette hand shower, shower holder, shower hose
- flow rate at 3 bar: 5 l/min
- ceramic cartridge
- temperature limitation adjustable
- suitable for continuous flow water heaters
- connection dimension: DN15

	finish	code no.	Euro



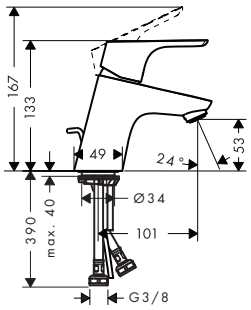

Single lever basin mixer 70 CoolStart with pop-up waste set
- consists of: single lever basin mixer, waste set
- ComfortZone 70
- projection 101 mm
- normal spray
- flow rate at 3 bar: 5 l/min
- ceramic cartridge
- temperature limitation adjustable
- suitable for continuous flow water heaters
- pop-up waste set G 1¼
- material waste set: metal
- connection dimension: DN15
- cold water in middle position

Chrome | 31539000 | 105.30

Air Power · Eco Smart · Quick Clean · Comfort Zone · Cool Start



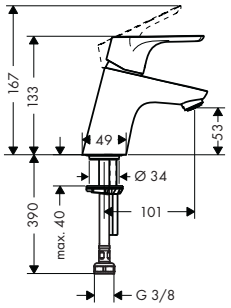

Pillar tap 70 without waste set
- ComfortZone 70
- projection 101 mm
- normal spray
- flow rate at 3 bar: 5 l/min
- ceramic cartridge
- for cold water connection
- connection dimension: DN15

Chrome | 31130000 | 97.10

Air Power · Eco Smart · Quick Clean · Comfort Zone



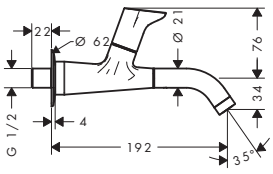

Tap wall-mounted without waste set
- projection 195 mm
- normal spray
- flow rate at 3 bar: 5 l/min
- ceramic valves 90°
- for cold water connection
- connection dimension: DN15

Chrome | 31131000 | 123.30

Air Power · Eco Smart



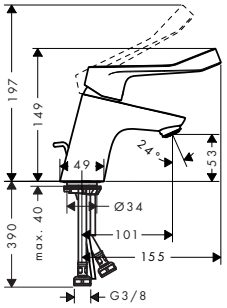

Single lever basin mixer 70 with extra long handle and pop-up waste set
- consists of: single lever basin mixer, waste set
- ComfortZone 70
- larger print for greater clarity
- with extra long barrier-free handle
- projection 101 mm
- laminar spray
- flow rate at 3 bar: 5 l/min
- ceramic cartridge
- temperature limitation adjustable
- suitable for continuous flow water heaters
- pop-up waste set G 1¼
- material waste set: metal
- connection dimension: DN15

Chrome | 31910000 | 115.60

Eco Smart · Comfort Zone

Alternative products:
- Single lever basin mixer 70 with extra long handle without waste set

Chrome | 31914000 | 109.70

Measurements within scale drawings are in mm.

Technical specifications and units of measure are subject to change.

	finish	code no.	Euro



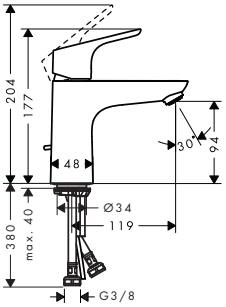

Single lever basin mixer 100 with pop-up waste set
- consists of: single lever basin mixer, waste set
- ComfortZone 100
- projection 119 mm
- normal spray
- flow rate at 3 bar: 5 l/min
- ceramic cartridge
- temperature limitation adjustable
- suitable for continuous flow water heaters
- pop-up waste set G 1¼
- material waste set: metal
- connection dimension: DN15

Chrome — 31607000 — 129.50

Air Power · Eco Smart · Quick Clean · Comfort Zone

Alternative products:

- Single lever basin mixer 100 without waste set — Chrome — 31517000 — 123.00
- Single lever basin mixer 100 LowFlow with pop-up waste set — Chrome — 31603000 — 124.70
- Single lever basin mixer 100 LowFlow without waste set — Chrome — 31513000 — 118.60



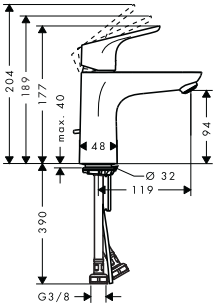

Single lever basin mixer 100 with 2 flow rates with pop-up waste set
- consists of: single lever basin mixer, waste set
- ComfortZone 100
- projection 119 mm
- normal spray
- ceramic cartridge with 2 flow rates
- temperature limitation adjustable
- suitable for continuous flow water heaters
- pop-up waste set G 1¼
- material waste set: metal
- connection dimension: DN15
- cold water in middle position

Chrome — 31657000 — 129.50

Air Power · Eco Smart · Quick Clean · Comfort Zone · Cool Start



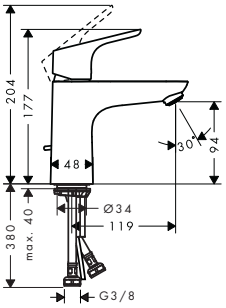

Single lever basin mixer 100 CoolStart with pop-up waste set
- consists of: single lever basin mixer, waste set
- ComfortZone 100
- projection 119 mm
- normal spray
- flow rate at 3 bar: 5 l/min
- ceramic cartridge
- temperature limitation adjustable
- suitable for continuous flow water heaters
- pop-up waste set G 1¼
- material waste set: metal
- connection dimension: DN15
- cold water in middle position

Chrome — 31621000 — 129.50

Air Power · Eco Smart · Quick Clean · Comfort Zone · Cool Start

Alternative products:

- Single lever basin mixer 100 CoolStart without waste set — Chrome — 31509000 — 123.00

Measurements within scale drawings are in mm.

Technical specifications and units of measure are subject to change.

	finish	code no.	Euro



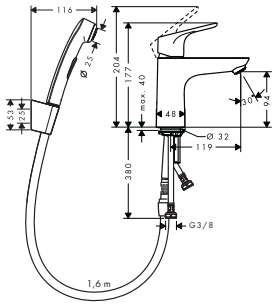

Single lever basin mixer 100 with bidette hand shower and shower hose 160 cm
- consists of: single lever basin mixer, bidette hand shower, shower holder, shower hose, waste set
- projection 119 mm
- normal spray
- spray type Bidette: shower spray
- flow rate at 3 bar: 5 l/ min
- ceramic cartridge
- temperature limitation adjustable
- suitable for continuous flow water heaters
- push-open waste set G 1¼
- connection dimension: DN15

Chrome | 31927000 | 147.70

Air Power · Eco Smart · Quick Clean



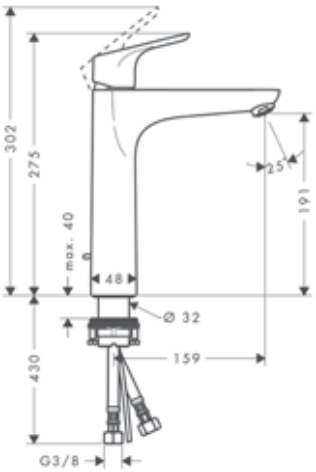

Single lever basin mixer 190 with pop-up waste set
- consists of: single lever basin mixer, waste set
- ComfortZone 190
- projection 159 mm
- normal spray
- flow rate at 3 bar: 5 l/ min
- ceramic cartridge
- temperature limitation adjustable
- suitable for continuous flow water heaters
- pop-up waste set G 1¼
- material waste set: metal
- connection dimension: DN15

Chrome | 31608000 | 155.40

Air Power · Eco Smart · Quick Clean · Comfort Zone

Alternative products:
- Single lever basin mixer 190 without waste set

Chrome | 31518000 | 149.00



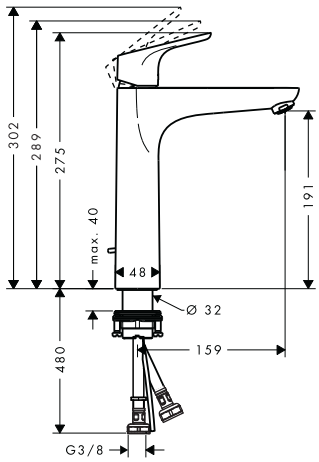

Single lever basin mixer 190 with 2 flow rates with pop-up waste set
- consists of: single lever basin mixer, waste set
- ComfortZone 190
- projection 159 mm
- normal spray
- ceramic cartridge with 2 flow rates
- temperature limitation adjustable
- suitable for continuous flow water heaters
- pop-up waste set G 1¼
- material waste set: metal
- connection dimension: DN15
- cold water in middle position

Chrome | 31658000 | 155.40

Air Power · Eco Smart · Quick Clean · Comfort Zone · Cool Start

Measurements within scale drawings are in mm.

Technical specifications and units of measure are subject to change.

	finish	code no.	Euro



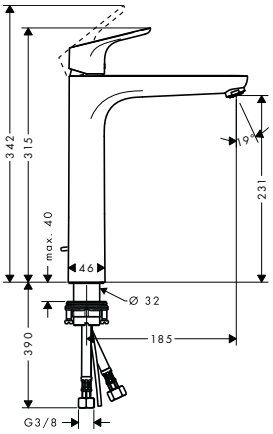

Single lever basin mixer 230 with pop-up waste set
- consists of: single lever basin mixer, waste set
- ComfortZone 230
- projection 185 mm
- normal spray
- flow rate at 3 bar: 5 l/min
- ceramic cartridge
- temperature limitation adjustable
- suitable for continuous flow water heaters
- pop-up waste set G 1¼
- material waste set: metal
- connection dimension: DN15

Chrome — 31531000 — 184.90

Air Power · Eco Smart · Quick Clean · Comfort Zone

Alternative products:
- Single lever basin mixer 230 without waste set

Chrome — 31532000 — 179.60



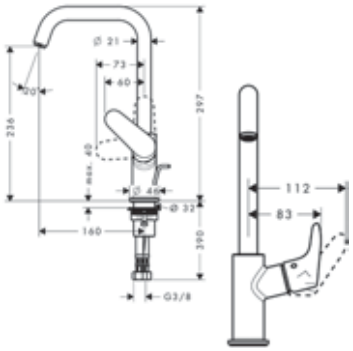

Single lever basin mixer 240 with swivel spout and pop-up waste set
- consists of: single lever basin mixer, waste set
- ComfortZone 240
- projection 160 mm
- swivel range 120°
- normal spray
- flow rate at 3 bar: 5 l/min
- ceramic cartridge
- temperature limitation adjustable
- suitable for continuous flow water heaters
- pop-up waste set G 1¼
- material waste set: metal
- connection dimension: DN15
- handle position on the side: bottom-side at the base body (not suitable for wash bowls)

Chrome — 31609000 — 187.80

Air Power · Eco Smart · Comfort Zone

Alternative products:
- Single lever basin mixer 240 with swivel spout without waste set

Chrome — 31519000 — 181.40



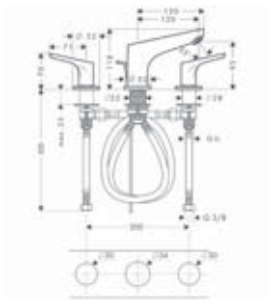

3-hole basin mixer 100 with pop-up waste set
- consists of: 3-hole basin mixer, waste set
- ComfortZone 100
- flow rate at 3 bar: 5 l/min
- ceramic valves hot/ cold 90°
- suitable for continuous flow water heaters
- pop-up waste set G 1¼
- material waste set: metal
- connection dimension: DN15

Chrome — 31937000 — 246.60

Air Power · Eco Smart · Quick Clean · Comfort Zone



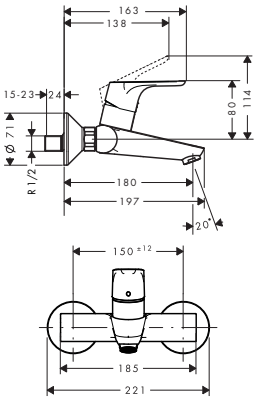

Single lever basin mixer for exposed installation wall-mounted
- projection 180 mm
- centre distance: 150 ± 12 mm
- normal spray
- flow rate at 3 bar: 5 l/min
- ceramic cartridge
- temperature limitation adjustable
- with noise reduction
- suitable for continuous flow water heaters
- connection dimension: DN15

Chrome — 31923000 — 134.50

Air Power · Eco Smart · Quick Clean

Measurements within scale drawings are in mm.

Technical specifications and units of measure are subject to change.

Focus

	finish	code no.	Euro
Electronic basin mixer with temperature control battery operation · ComfortZone 130 · projection 127 mm · flow rate at 3 bar: 5 l/min · theft-proof aerator · temperature limitation adjustable · temperature adjustable via mixer lever on the side · non-return valve · suitable for continous flow water heaters · infrared sensor technology · automatic environmental adjustment of infrared sensor · adjustable optical range of infrared sensor (2 settings) · battery condition indicator available · battery operation 6 V (Lithium battery, lifetime approx. 2 years, battery included in scope of delivery) · hygiene rinse activatable (automatic water flow for 10 seconds every 24 hours following the last operation) · permanent rinse activatable (single water flow for 180 seconds, suitable for thermal disinfection) · manual water stop for washbasin cleaning · performance may be impaired if the sensor is obscured by the design of the wash basin, or when the wash basin is oversized and the distance between sensor and the wash basin edge is larger than 75 mm · functional restriction due to too large distance · connection dimension: DN15 · TÜV certified · dirt filters in the connection hoses · two filter units with fine filter to protect from incoming dirt, for assembly on existing angle valves, filter element can be removed and cleaned	Chrome	31171000	472.70
Alternative products:			
· Electronic basin mixer with temperature pre-adjustment battery operation	Chrome	31172000	429.00
· Electronic basin mixer with temperature control mains connection 230 V	Chrome	31173000	494.70
· Electronic basin mixer with temperature pre-adjustment mains connection 230 V	Chrome	31174000	473.30



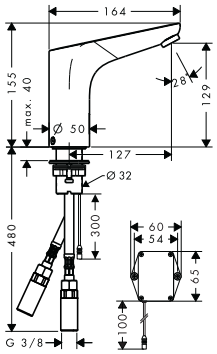

Bidet

	finish	code no.	Euro
Single lever bidet mixer with pop-up waste set · consists of: single lever bidet mixer, waste set · projection 126 mm · aerator with ball pivot · normal spray · flow rate at 3 bar: 7.2 l/min · ceramic cartridge · temperature limitation adjustable · suitable for continous flow water heaters · material waste set: metal · connection dimension: DN15	Chrome	31920000	105.30
Alternative products:			
· Single lever bidet mixer with push-open waste set	Chrome	31922000	105.30



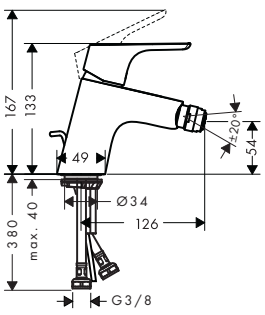

Measurements within scale drawings are in mm.

Technical specifications and units of measure are subject to change.

		finish	code no.	Euro
	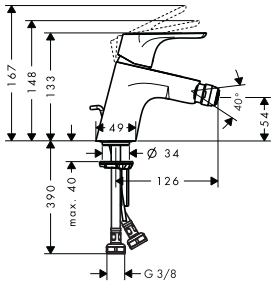	**Single lever bidet mixer with 2 flow rates with pop-up waste set** · consists of: single lever bidet mixer, waste set · projection 126 mm · aerator with ball pivot · normal spray · ceramic cartridge with 2 flow rates · temperature limitation adjustable · suitable for continous flow water heaters · material waste set: metal · connection dimension: DN15	Chrome	31928000	105.30
	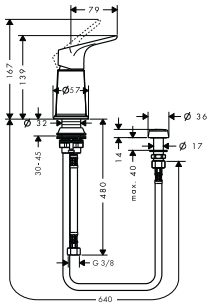	**Bidet set with vertical spray** · consists of: Bidet mixer, vertical spray · ceramic cartridge · vertical spray and diverter · integrated non-return valve · efficient from 0.05 MPa onwards · connection dimension: DN15	Chrome	31629000	126.50

Bath

	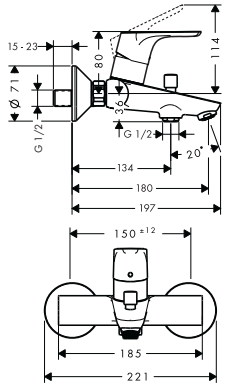	**Single lever bath mixer for exposed installation** · projection 172 - 179.5 mm · connection type: s-shaped connections · centre distance: 150 ± 12 mm · spray type mixer: normal spray · flow rate for bath spout at 3 bar: 22 l/min · flow rate of hand shower at 3 bar: 26 l/min · ceramic cartridge · min. operating pressure: 1 bar · max. operating pressure: 10 bar · temperature limitation adjustable · with automatic resetting · intrinsically safe against backflow · with silencer · suitable for continous flow water heaters · connection dimension: DN15	Chrome	31940000	129.50
		Alternative products: · Single lever bath mixer for exposed installation with 2 flow rates	Chrome	31948000	129.50
	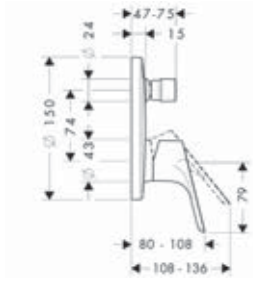	**Single lever bath mixer for concealed installation** · connection type: basic set · ceramic cartridge · min. operating pressure: 1 bar · max. operating pressure: 10 bar · temperature limitation adjustable · with automatic resetting · with silencer	Chrome	31945000	131.20
		Alternative products: · Single lever bath mixer for concealed installation with integrated security combination according to EN1717	Chrome	31946000	200.60
		Required parts: · Basic set iBox universal		01800180	130.80
		Optional parts: · Extension element 15 cm	Chrome	13597000	44.10

Measurements within scale drawings are in mm.

		finish	code no.	Euro
	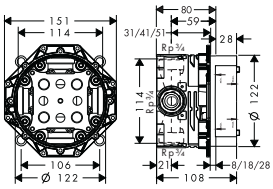	**Basic set iBox universal** · connection thread Rp ¾ · suitable for all shower, bath tub and thermostat finish sets for concealed installation · rotationally-symmetric installation · sound-decoupled installation · connection dimension: DN20		01800180	130.80
		Alternative products: · Basic set iBox universal with shut-off unit		01850180	169.90
		Optional parts: · Extension iBox universal basic set 2.5 cm · Fastening rail set for iBox universal · Assembly aid for iBox universal		13595000 96615000 93500000	46.50 33.00 12.00
		NEW			
	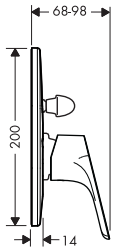	**Single lever bath mixer for concealed installation** · connection type: basic set · ceramic cartridge · min. operating pressure: 1 bar · max. operating pressure: 10 bar · temperature limitation adjustable · with automatic resetting	Chrome	31947000	48.00
		Required parts: · Basic set for single lever bath mixer for concealed installation		31741180	118.60
	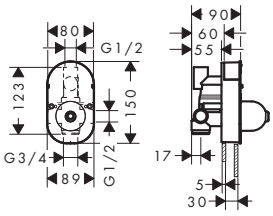	**Basic set for single lever bath mixer for concealed installation** · ceramic cartridge · connection dimension: DN15		31741180	118.60
	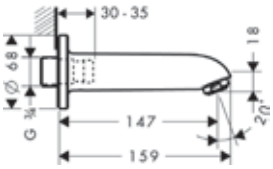	**Bath spout** · with silencer · with escutcheon · projection 147 mm · wall-mounted · flow rate: 32 l/min · connection dimension: DN20	Chrome	13414000	103.90
	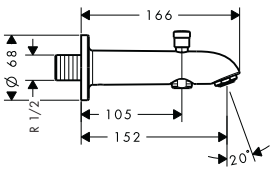	**Bath spout 15.2 cm with diverter valve** · connection type: G ½ · with automatic resetting · with escutcheon · with integrated safety combination EN1717 · projection 152 mm · wall-mounted · flow rate: 25 l/min · connection dimension: DN15 · intrinsically safe against backflow	Chrome	13423000	106.30
		Alternative sizes: · Bath spout 22.8 cm with diverter valve	Chrome	13424000	115.20

Measurements within scale drawings are in mm.

Technical specifications and units of measure are subject to change.

	finish	code no.	Euro
 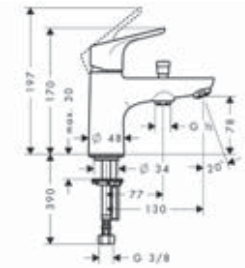	**Single lever bath and shower mixer Monotrou** · projection 130 mm · connection type: G ⅜ connections · spray type mixer: normal spray · flow rate at 3 bar: 20 l/min · ceramic cartridge · min. operating pressure: 1 bar · max. operating pressure: 10 bar · temperature limitation adjustable · with automatic resetting · intrinsically safe against backflow · suitable for continous flow water heaters · connection dimension: DN15	Chrome	31930000	136.80
	Alternative products: · Single lever bath and shower mixer Monotrou with 2 flow rates	Chrome	31938000	136.80
 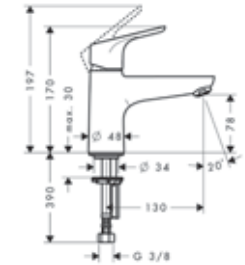	**Single lever bath mixer Monotrou** · projection 130 mm · connection type: G ⅜ connections · spray type mixer: normal spray · flow rate at 3 bar: 20 l/min · ceramic cartridge · min. operating pressure: 1 bar · max. operating pressure: 10 bar · temperature limitation adjustable · suitable for continous flow water heaters · connection dimension: DN15	Chrome	31931000	127.70
 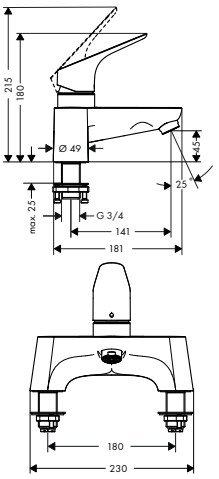	**2-hole rim mounted bath mixer** · connection type: G ¾ · centre distance: 180 mm · ceramic cartridge (Highflow) · operating pressure from 0.02 MPa · with silencer · connection dimension: DN15	Chrome	31523000	250.70
 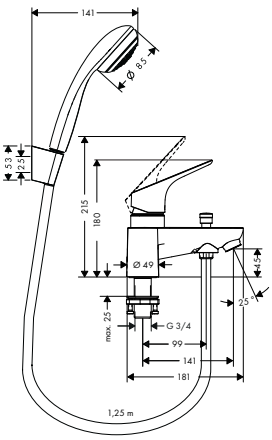	**2-hole rim mounted bath mixer with diverter valve and Crometta 85 hand shower 1jet** · consists of: 2-hole rim mounted bath mixer, hand shower, shower holder, shower hose · connection type: G ¾ · centre distance: 180 mm · ceramic cartridge (Highflow) · operating pressure from 0.02 MPa · with automatic resetting · non-return valve · with silencer · connection dimension: DN15 **Consisting of:** · Hand shower Mono (# 28585000) · Shower holder Porter S (# 28331XXX) · Shower hose 160 cm (# 28276XXX)	Chrome	31521000	297.60

Measurements within scale drawings are in mm.

Technical specifications and units of measure are subject to change.

	finish	code no.	Euro
4-hole rim mounted bath mixer · consists of: 4-hole rim mounted bath mixer, hand shower, shower hose, shower holder · connection type: basic set · flow rate at 3 bar: 22 l/ min · ceramic valves hot/ cold 180° · with automatic resetting · non-return valve · connection dimension: DN15 · with integrated safety combination EN1717	Chrome	31936000	359.80
Consisting of: · Hand shower Vario (# 28562000)			
Required parts: · Basic set for 4-hole rim mounted bath mixer		13244180	275.20
Basic set for 4-hole rim mounted bath mixer · consists of: basic set, shower holder, shower hose · maintenance opening required · suitable for 4-hole rim mounted bath mixer · connection thread: G ½ · connection dimension: DN15 · ceramic valves hot/ cold 90°		13244180	275.20

Shower

Single lever shower mixer for exposed installation · 1 outlet · connection type: s-shaped connections · centre distance: 150 ± 12 mm · flow rate of hand shower at 3 bar: 15 l/ min · ceramic cartridge · min. operating pressure: 1 bar · max. operating pressure: 10 bar · temperature limitation adjustable · non-return valve · with silencer · hose connection DN15 · connection dimension: DN15	Chrome	31960000	108.50
Alternative products: · Single lever shower mixer for exposed installation with 2 flow rates	Chrome	31968000	108.50
Long swivel spout 30 cm · with automatic resetting · for installation on single lever shower mixer · length 300 mm · connection dimension DN15	Chrome	14495000	93.60

Measurements within scale drawings are in mm.

Technical specifications and units of measure are subject to change.

	finish	code no.	Euro
 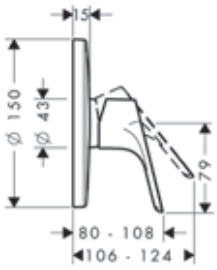			
Single lever shower mixer for concealed installation · 1 outlet · connection type: basic set · ceramic cartridge · min. operating pressure: 1 bar · max. operating pressure: 10 bar · temperature limitation adjustable	Chrome	31965000	123.30
Required parts:			
· Basic set iBox universal		01800180	130.80
Optional parts:			
· Extension element 15 cm	Chrome	13597000	44.10
 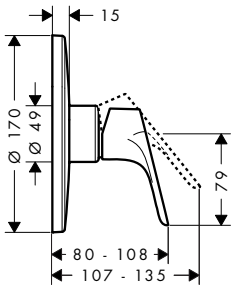			
Single lever shower mixer HighFlow for concealed installation · 1 outlet · connection type: basic set · flow rate at 3 bar: 49 l/min · ceramic cartridge (Highflow) · temperature limitation adjustable · connection dimension: DN15	Chrome	31964000	123.30
Required parts:			
· Basic set iBox universal with shut-off unit		01850180	169.90
· Basic set iBox universal		01800180	130.80
Optional parts:			
· Basic set for Trio diverter valve for concealed installation		15984180	153.20
 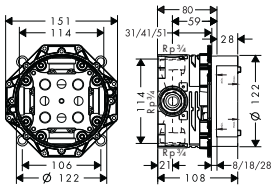			
Basic set iBox universal · connection thread Rp ¾ · suitable for all shower, bath tub and thermostat finish sets for concealed installation · rotationally-symmetric installation · sound-decoupled installation · connection dimension: DN20		01800180	130.80
Alternative products:			
· Basic set iBox universal with shut-off unit		01850180	169.90
Optional parts:			
· Extension iBox universal basic set 2.5 cm		13595000	46.50
· Fastening rail set for iBox universal		96615000	33.00
· Assembly aid for iBox universal		93500000	12.00
NEW			
 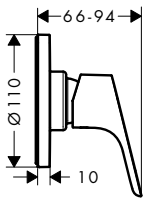			
Single lever shower mixer for concealed installation · 1 outlet · connection type: basic set · flow rate at 3 bar: 28.7 l/min · min. operating pressure: 1 bar · max. operating pressure: 10 bar	Chrome	31961000	40.90
Required parts:			
· Basic set for single lever shower mixer for concealed installation		13620180	105.30

Measurements within scale drawings are in mm.

		finish	code no.	Euro
	**Single lever shower mixer for concealed installation** · 1 outlet · connection type: basic set · flow rate at 3 bar: 28.7 l/min · min. operating pressure: 1 bar · max. operating pressure: 10 bar	Chrome	31967000	40.90
	Required parts: · Basic set for single lever shower mixer for concealed installation		13620180	105.30
	**Basic set for single lever shower mixer for concealed installation** · ceramic cartridge · connection dimension: DN15		13620180	105.30

Novus®



Basin	page 369		Bidet	page 372	
Bath	page 373		Shower	page 376	

Possible combinations Novus

Basin


no.71126000*


no.71123000*


no.71030000*


no.71020000*


no.71140000


no.71127000

Bath


no.71040000*


no.71045000*


no.13201000


no.15758000


no.71333000


no.71320000

Shower


no.71060000*


no.71065000*


no.13211000


no.15757000


no.26330400*


no.26723000*


no.26657400*


no.27264400*

Accessories


no.40514000


no.40523000


no.40522000


no.01800180

* as an example

Basin

	finish	code no.	Euro
Pillar tap 70 for cold water without waste set · ComfortZone 70 · projection 107 mm · normal spray · flow rate at 3 bar: 5 l/min · ceramic cartridge · for cold water connection · connection dimension: DN15	Chrome	71050000	76.80



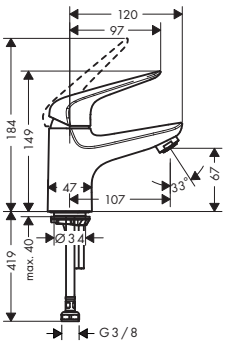

	finish	code no.	Euro
Single lever basin mixer 100 with pop-up waste set · consists of: single lever basin mixer, waste set · ComfortZone 100 · projection 118 mm · normal spray · flow rate at 3 bar: 5 l/min · ceramic cartridge · temperature limitation adjustable · suitable for continuous flow water heaters · pop-up waste set G 1¼ · material waste set: metal · connection dimension: DN15	Chrome	71030000	112.60
Alternative products:			
· Single lever basin mixer 100 without waste set	Chrome	71031000	105.50
· Single lever basin mixer 100 LowFlow with push-open waste set	Chrome	71034000	112.60
· Single lever basin mixer 100 with 2 flow rates with pop-up waste set	Chrome	71037000	112.60
· Single lever basin mixer 100 for vented hot water cylinders with push-open waste set	Chrome	71036000	180.20



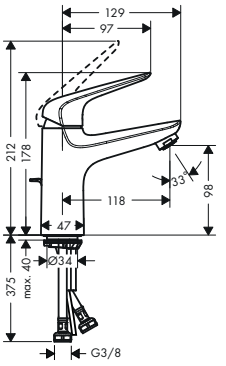

	finish	code no.	Euro
Single lever basin mixer 100 CoolStart with push-open waste set · consists of: single lever basin mixer, waste set · ComfortZone 100 · projection 118 mm · normal spray · flow rate at 3 bar: 5 l/min · ceramic cartridge · temperature limitation adjustable · suitable for continuous flow water heaters · push-open waste set G 1¼ · material waste set: synthetic · connection dimension: DN15 · cold water in middle position	Chrome	71032000	112.60



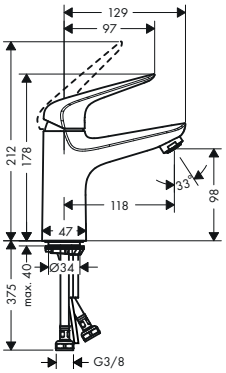

Measurements within scale drawings are in mm.

Technical specifications and units of measure are subject to change.

	finish	code no.	Euro



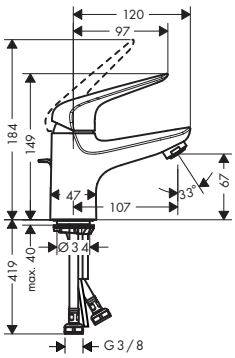

Single lever basin mixer 70 with pop-up waste set — Chrome — 71020000 — 92.20

Air Power · Eco Smart · Quick Clean · Comfort Zone

- consists of: single lever basin mixer, waste set
- ComfortZone 70
- projection 107 mm
- normal spray
- flow rate at 3 bar: 5 l/min
- ceramic cartridge
- temperature limitation adjustable
- suitable for continuous flow water heaters
- pop-up waste set G 1¼
- material waste set: metal
- connection dimension: DN15

Alternative products:

- Single lever basin mixer 70 without waste set — Chrome — 71021000 — 85.00
- Single lever basin mixer 70 LowFlow with push-open waste set — Chrome — 71024000 — 92.20
- Single lever basin mixer 70 with 2 flow rates with pop-up waste set — Chrome — 71026000 — 90.00



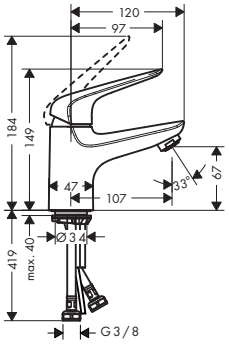

Single lever basin mixer 70 CoolStart with push-open waste set — Chrome — 71022000 — 92.20

Air Power · Eco Smart · Quick Clean · Comfort Zone · Cool Start

- consists of: single lever basin mixer, waste set
- ComfortZone 70
- projection 107 mm
- normal spray
- flow rate at 3 bar: 5 l/min
- ceramic cartridge
- temperature limitation adjustable
- suitable for continuous flow water heaters
- push-open waste set G 1¼
- material waste set: synthetic
- connection dimension: DN15
- cold water in middle position



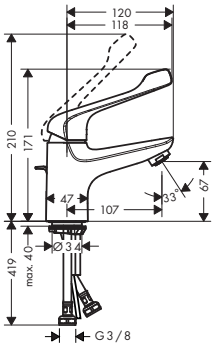

Single lever basin mixer 70 with extra long handle and pop-up waste set — Chrome — 71920000 — 101.40

Air Power · Eco Smart · Quick Clean · Comfort Zone

- consists of: single lever basin mixer, waste set
- ComfortZone 70
- larger print for greater clarity
- with extra long barrier-free handle
- projection 107 mm
- normal spray
- flow rate at 3 bar: 5 l/min
- ceramic cartridge
- temperature limitation adjustable
- suitable for continuous flow water heaters
- pop-up waste set G 1¼
- material waste set: metal
- connection dimension: DN15

Measurements within scale drawings are in mm.

Technical specifications and units of measure are subject to change.

	finish	code no.	Euro



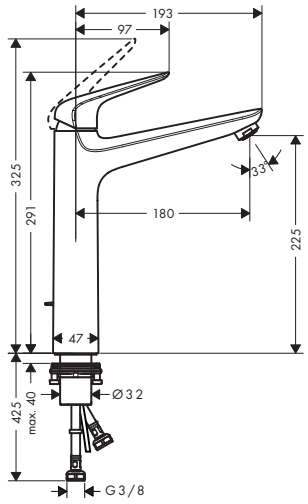

Single lever basin mixer 230 with pop-up waste set — Chrome — 71123000 — 143.40

Air Power · Eco Smart · Quick Clean · Comfort Zone

- consists of: single lever basin mixer, waste set
- ComfortZone 230
- projection 180 mm
- normal spray
- flow rate at 3 bar: 5 l/min
- ceramic cartridge
- temperature limitation adjustable
- suitable for continuous flow water heaters
- pop-up waste set G 1¼
- material waste set: metal
- connection dimension: DN15

Alternative products:

- Single lever basin mixer 230 without waste set — Chrome — 71124000 — 137.20
- Single lever basin mixer 230 with 2 flow rates with pop-up waste set — Chrome — 71125000 — 143.40



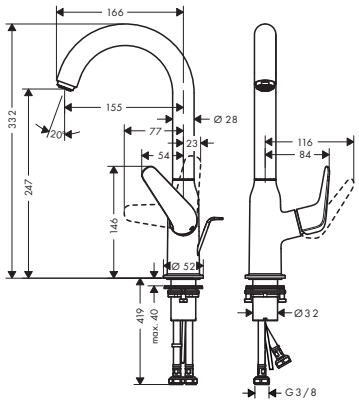

Single lever basin mixer 240 with swivel spout and pop-up waste set — Chrome — 71126000 — 174.10

Air Power · Eco Smart · Quick Clean · Comfort Zone

- consists of: single lever basin mixer, waste set
- ComfortZone 240
- projection 155 mm
- swivel range 120°
- normal spray
- flow rate at 3 bar: 5 l/min
- ceramic cartridge
- temperature limitation adjustable
- suitable for continuous flow water heaters
- pop-up waste set G 1¼
- material waste set: metal
- connection dimension: DN15
- handle position on the side: bottom-side at the base body (not suitable for wash bowls)

Alternative products:

- Single lever basin mixer 240 with swivel spout without waste set — Chrome — 71128000 — 167.90



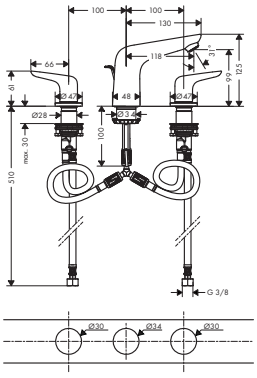

3-hole basin mixer 100 with pop-up waste set — Chrome — 71140000 — 209.90

Air Power · Eco Smart · Quick Clean · Comfort Zone

- consists of: 3-hole basin mixer, waste set
- ComfortZone 100
- projection 118 mm
- flow rate at 3 bar: 5 l/min
- ceramic valves hot/ cold 90°
- suitable for continuous flow water heaters
- pop-up waste set G 1¼
- material waste set: metal
- connection dimension: DN15

Measurements within scale drawings are in mm.

	finish	code no.	Euro



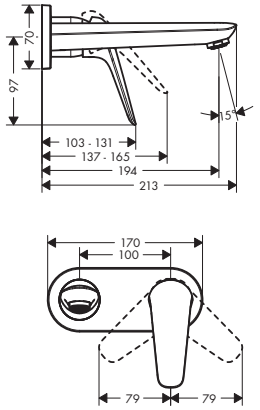

Single lever basin mixer for concealed installation wall-mounted with spout 19.5 cm
- consists of: Single lever basin mixer for concealed installation wall-mounted, waste set
- projection 194 mm
- normal spray
- flow rate at 3 bar: 5 l/min
- ceramic cartridge
- temperature limitation adjustable
- suitable for continuous flow water heaters
- non-closing waste set
- material waste set: metal
- connection dimension: DN15
- handle can be positioned on the right or left, depends on the basic set installation

Chrome | 71127000 | 153.60

Air Power | Eco Smart | Quick Clean

Required parts:
- Basic set for single lever basin mixer for concealed installation wall-mounted

13622180 | 210.00



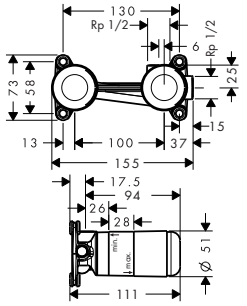

Basic set for single lever basin mixer for concealed installation wall-mounted
- variable positioning of the mixer system, can be left or right of the spout
- connection dimension: DN15

13622180 | 210.00

Optional parts:
- Extension set 2.5 cm

31971000 | 104.00



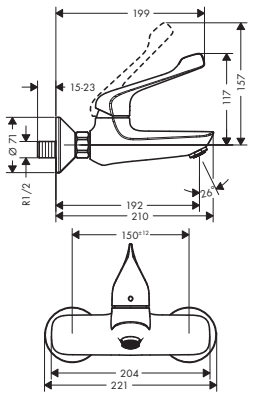

Single lever basin mixer for exposed installation with extra long handle
- larger print for greater clarity
- with extra long barrier-free handle
- projection 192 mm
- centre distance: 150 ± 12 mm
- normal spray
- flow rate at 3 bar: 5 l/min
- ceramic cartridge
- temperature limitation adjustable
- with noise reduction
- suitable for continuous flow water heaters
- connection dimension: DN15

Chrome | 71923000 | 141.30

Air Power | Eco Smart | Quick Clean

Bidet



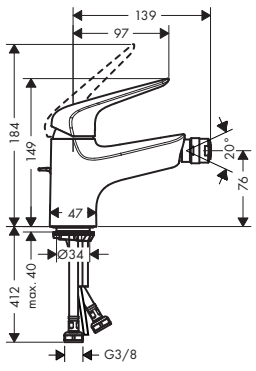

Single lever bidet mixer 70 with pop-up waste set
- consists of: single lever bidet mixer, waste set
- projection 139 mm
- aerator with ball pivot
- normal spray
- flow rate at 3 bar: 7.2 l/min
- ceramic cartridge
- temperature limitation adjustable
- suitable for continous flow water heaters
- material waste set: metal
- connection dimension: DN15

Chrome | 71142000 | 102.40

Air Power | Quick Clean

Alternative products:
- Single lever bidet mixer 70 with 2 flow rates with pop-up waste set

Chrome | 71143000 | 102.40

Measurements within scale drawings are in mm.

Technical specifications and units of measure are subject to change.

	finish	code no.	Euro



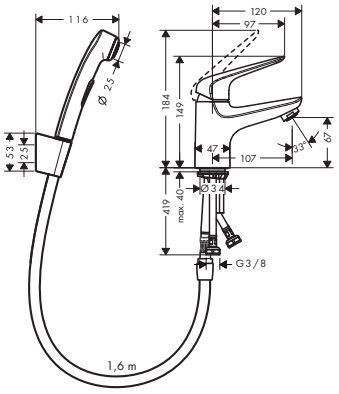

Single lever basin mixer 70 with bidette hand shower and shower hose 160 cm
- consists of: single lever basin mixer, bidette hand shower, shower holder, shower hose
- ComfortZone 70
- projection 107 mm
- flow rate at 3 bar: 5 l/min
- ceramic cartridge
- temperature limitation adjustable
- suitable for continuous flow water heaters
- connection dimension: DN15

Consisting of:
- Single lever basin mixer 70 without waste set (# 71021000)
- Bidette hand shower 1jet with shower holder and pressure shower hose 160 cm (# 32128000)

Chrome | 71144000 | 138.20

Air Power · Eco Smart · Quick Clean · Comfort Zone



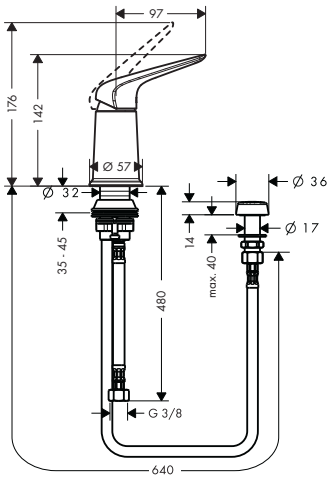

Bidet set with vertical spray
- consists of: Bidet mixer, vertical spray
- ceramic cartridge
- vertical spray and diverter
- integrated non-return valve
- efficient from 0.05 MPa onwards
- connection dimension: DN15

Chrome | 71145000 | 138.20

Eco Smart · Low Pressure

Bath



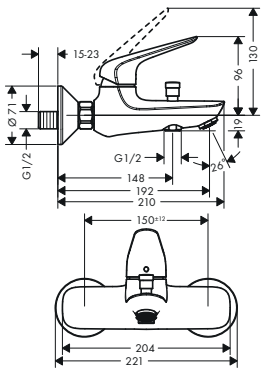

Single lever bath mixer for exposed installation
- projection 192 mm
- connection type: s-shaped connections
- centre distance: 150 ± 12 mm
- spray type mixer: normal spray
- flow rate for bath spout at 3 bar: 19 l/min
- flow rate of hand shower at 3 bar: 16 l/min
- ceramic cartridge
- min. operating pressure: 1 bar
- max. operating pressure: 10 bar
- temperature limitation adjustable
- with automatic resetting
- non-return valve
- with silencer
- suitable for continous flow water heaters
- connection dimension: DN15

Chrome | 71040000 | 123.90

Air Power · Quick Clean

Alternative products:

- Single lever bath mixer for exposed installation with centre distance 15.3 cm — Chrome | 71041000 | 130.10
- Single lever bath mixer for exposed installation with 2 flow rates — Chrome | 71042000 | 123.90

Measurements within scale drawings are in mm.

Technical specifications and units of measure are subject to change.

	finish	code no.	Euro
 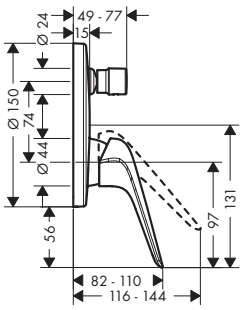			
Single lever bath mixer for concealed installation · connection type: basic set · ceramic cartridge · min. operating pressure: 1 bar · max. operating pressure: 10 bar · temperature limitation adjustable · with automatic resetting · with silencer	Chrome	71045000	117.80
Alternative products:			
· Single lever bath mixer for concealed installation with integrated security combination according to EN1717	Chrome	71046000	183.30
Required parts:			
· Basic set iBox universal		01800180	130.80
Optional parts:			
· Extension element 15 cm	Chrome	13597000	44.10
 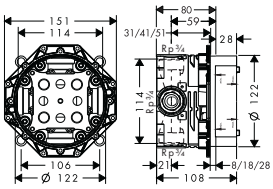			
Basic set iBox universal · connection thread Rp ¾ · suitable for all shower, bath tub and thermostat finish sets for concealed installation · rotationally-symmetric installation · sound-decoupled installation · connection dimension: DN20		01800180	130.80
Alternative products:			
· Basic set iBox universal with shut-off unit		01850180	169.90
Optional parts:			
· Extension iBox universal basic set 2.5 cm		13595000	46.50
· Fastening rail set for iBox universal		96615000	33.00
· Assembly aid for iBox universal		93500000	12.00
NEW			
 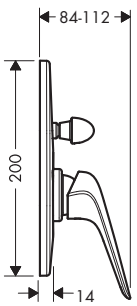			
Single lever bath mixer for concealed installation · connection type: basic set · ceramic cartridge · min. operating pressure: 1 bar · max. operating pressure: 10 bar · temperature limitation adjustable · with automatic resetting	Chrome	71047000	44.00
Required parts:			
· Basic set for single lever bath mixer for concealed installation		31741180	118.60
 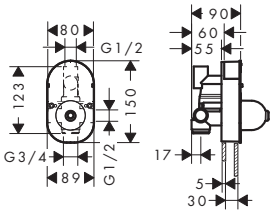			
Basic set for single lever bath mixer for concealed installation · ceramic cartridge · connection dimension: DN15		31741180	118.60

Measurements within scale drawings are in mm.

Technical specifications and units of measure are subject to change.

	finish	code no.	Euro
 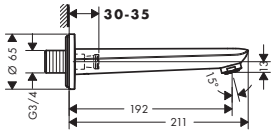			
Bath spout · with silencer · with escutcheon · projection 192 mm · wall-mounted · flow rate: 32 l/ min · connection dimension: DN20 · non-return valve	Chrome	71320000	89.60
 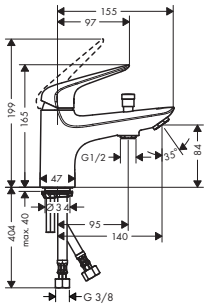			
Single lever bath and shower mixer Monotrou · projection 140 mm · connection type: G ⅜ connections · spray type mixer: normal spray · flow rate at 3 bar: 20 l/ min · ceramic cartridge · min. operating pressure: 1 bar · max. operating pressure: 10 bar · temperature limitation adjustable · with automatic resetting · non-return valve · suitable for continous flow water heaters · connection dimension: DN15	Chrome	71321000	122.90
Alternative products: · Single lever bath and shower mixer Monotrou with 2 flow rates	Chrome	71324000	122.90
 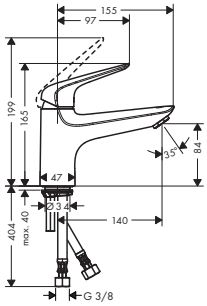			
Single lever bath mixer Monotrou · projection 140 mm · connection type: G ⅜ connections · spray type mixer: normal spray · flow rate at 3 bar: 20 l/ min · ceramic cartridge · min. operating pressure: 1 bar · max. operating pressure: 10 bar · temperature limitation adjustable · suitable for continous flow water heaters · connection dimension: DN15	Chrome	71322000	112.60
 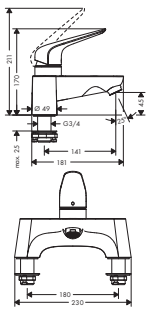			
2-hole rim mounted bath mixer · projection 141 mm · connection type: G ¾ · centre distance: 180 mm · ceramic cartridge (Highflow) · operating pressure from 0.02 MPa · with silencer · connection dimension: DN15	Chrome	71043000	235.50
 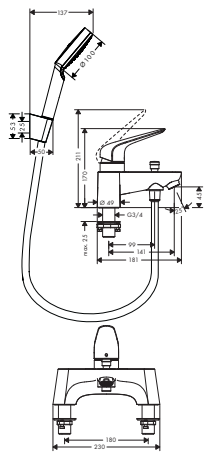			
2-hole rim mounted bath mixer with diverter valve and Croma Select S hand shower · consists of: 2-hole rim mounted bath mixer, hand shower, shower holder, shower hose · projection 141 mm · connection type: G ¾ · centre distance: 180 mm · ceramic cartridge (Highflow) · operating pressure from 0.02 MPa · with automatic resetting · non-return valve · with silencer · connection dimension: DN15	Chrome	71044000	276.50
Consisting of: · Shower holder Porter S (# 28331XXX) · Shower hose 160 cm (# 28276XXX) · Hand shower 1jet (# 26804400)			

Measurements within scale drawings are in mm.

	finish	code no.	Euro
4-hole rim mounted bath mixer · consists of: 4-hole rim mounted bath mixer, hand shower, shower hose, shower holder · projection 183 mm · connection type: basic set · flow rate at 3 bar: 22 l/ min · ceramic valves hot/ cold 90° · with automatic resetting · non-return valve · connection dimension: DN15 · with integrated safety combination EN1717	Chrome	71333000	317.40
Consisting of: · Hand shower 1jet (# 26804400)			
Required parts: · Basic set for 4-hole rim mounted bath mixer		13244180	275.20
Basic set for 4-hole rim mounted bath mixer · consists of: basic set, shower holder, shower hose · maintenance opening required · suitable for 4-hole rim mounted bath mixer · connection thread: G ½ · connection dimension: DN15 · ceramic valves hot/ cold 90°		13244180	275.20

Shower

Single lever shower mixer for exposed installation · 1 outlet · connection type: s-shaped connections · centre distance: 150 ± 12 mm · flow rate of hand shower at 3 bar: 15 l/ min · ceramic cartridge · min. operating pressure: 1 bar · max. operating pressure: 10 bar · temperature limitation adjustable · non-return valve · with silencer · hose connection DN15 · connection dimension: DN15	Chrome	71060000	97.30
Alternative products:			
· Single lever shower mixer for exposed installation with centre distance 15.3 cm	Chrome	71061000	107.50
· Single lever shower mixer for exposed installation with 2 flow rates	Chrome	71062000	97.30
Single lever shower mixer for exposed installation with extra long handle · larger print for greater clarity · with extra long barrier-free handle · 1 outlet · connection type: s-shaped connections · centre distance: 150 ± 12 mm · ceramic cartridge · temperature limitation adjustable · non-return valve · with silencer · hose connection DN15 · connection dimension: DN15	Chrome	71926000	107.50

Measurements within scale drawings are in mm.

Technical specifications and units of measure are subject to change.

	finish	code no.	Euro
 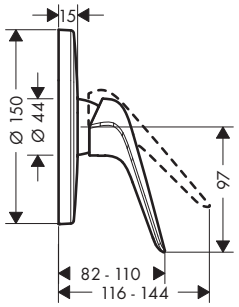			
Single lever shower mixer for concealed installation · 1 outlet · connection type: basic set · ceramic cartridge · min. operating pressure: 1 bar · max. operating pressure: 10 bar · temperature limitation adjustable	Chrome	71065000	107.50
Alternative products: · Single lever shower mixer HighFlow for concealed installation	Chrome	71066000	107.50
Required parts: · Basic set iBox universal		01800180	130.80
Optional parts: · Extension element 15 cm	Chrome	13597000	44.10
 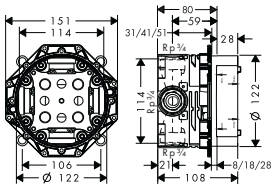			
Basic set iBox universal · connection thread Rp ¾ · suitable for all shower, bath tub and thermostat finish sets for concealed installation · rotationally-symmetric installation · sound-decoupled installation · connection dimension: DN20		01800180	130.80
Alternative products: · Basic set iBox universal with shut-off unit		01850180	169.90
Optional parts: · Extension iBox universal basic set 2.5 cm · Fastening rail set for iBox universal · Assembly aid for iBox universal		13595000 96615000 93500000	46.50 33.00 12.00
NEW			
 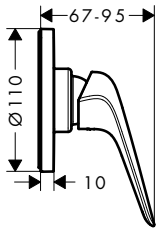			
Single lever shower mixer for concealed installation · 1 outlet · connection type: basic set · flow rate at 3 bar: 28.7 l/min · min. operating pressure: 1 bar · max. operating pressure: 10 bar	Chrome	71063000	35.80
Required parts: · Basic set for single lever shower mixer for concealed installation		13620180	105.30
 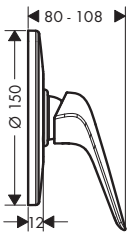			
Single lever shower mixer for concealed installation · 1 outlet · connection type: basic set · flow rate at 3 bar: 28.7 l/min · min. operating pressure: 1 bar · max. operating pressure: 10 bar	Chrome	71067000	35.80
Required parts: · Basic set for single lever shower mixer for concealed installation		13620180	105.30
 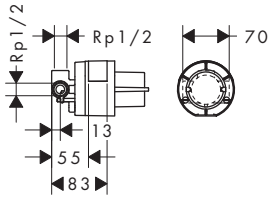			
Basic set for single lever shower mixer for concealed installation · ceramic cartridge · connection dimension: DN15		13620180	105.30

Measurements within scale drawings are in mm.

	finish	code no.	Euro
Shower mixer set for concealed installation · consists of: single lever shower mixer, basic set · 1 outlet · connection type: basic set · ceramic cartridge **Consisting of:** · Single lever shower mixer for concealed installation (# 71067000) · Basic set for single lever shower mixer for concealed installation (# 13620180)	Chrome	71068000	122.90



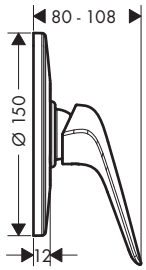

Measurements within scale drawings are in mm.

Technical specifications and units of measure are subject to change.

Logis®



Basin	page 381		Bidet	page 386	
Bath	page 387		Shower	page 391	
Valve	page 393				

Possible combinations Logis

Logis

Basin


no.71130000*


no.71090000*


no.71222000*


no.71100000*


no.71070000*


no.71120000*


no.71133000


no.71220000

Bath


no.71400000*


no.71243000


no.71405000*


no.13123000


no.15708000


no.71314000

Shower


no.71600000*


no.71263000


no.71605000*


no.15707000


no.13122000


no.26823400*


no.26577000, -400*


no.26656400*


no.27264400*

Accessories


no.40514000


no.40523000


no.40522000


no.01800180

* as an example

Basin

	finish	code no.	Euro



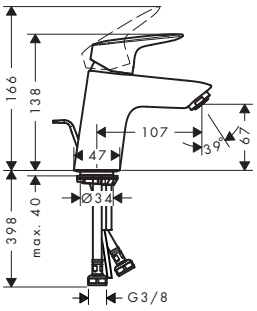

Single lever basin mixer 70 with pop-up waste set
- consists of: single lever basin mixer, waste set
- ComfortZone 70
- projection 107 mm
- normal spray
- flow rate at 3 bar: 5 l/min
- ceramic cartridge
- temperature limitation adjustable
- suitable for continuous flow water heaters
- pop-up waste set G 1¼
- material waste set: synthetic
- connection dimension: DN15

Chrome | 71070000 | 76.60

Air Power | Eco Smart | Comfort Zone

Alternative products:

- Single lever basin mixer 70 with metal pop-up waste set — Chrome | 71170000 | 87.20
- Single lever basin mixer 70 with push-open waste set — Chrome | 71077000 | 76.60
- Single lever basin mixer 70 without waste set — Chrome | 71071000 | 71.10
- Single lever basin mixer 70 LowFlow with pop-up waste set — Chrome | 71078000 | 76.60



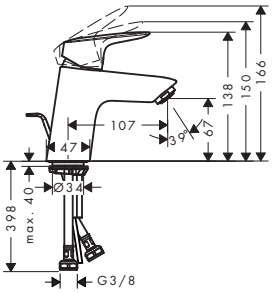

Single lever basin mixer 70 with 2 flow rates with pop-up waste set
- consists of: single lever basin mixer, waste set
- ComfortZone 70
- projection 107 mm
- normal spray
- flow rate at 3 bar: 9.5 l/min
- ceramic cartridge with 2 flow rates
- temperature limitation adjustable
- suitable for continuous flow water heaters
- pop-up waste set G 1¼
- material waste set: synthetic
- connection dimension: DN15
- cold water in middle position

Chrome | 71075000 | 76.60

Air Power | Eco Smart | Comfort Zone | Cool Start

Alternative products:

- Single lever basin mixer 70 with 2 flow rates without waste set — Chrome | 71076000 | 71.10



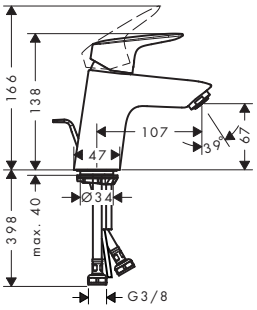

Single lever basin mixer 70 CoolStart with pop-up waste set
- consists of: single lever basin mixer, waste set
- ComfortZone 70
- projection 107 mm
- normal spray
- flow rate at 3 bar: 5 l/min
- ceramic cartridge
- temperature limitation adjustable
- suitable for continuous flow water heaters
- pop-up waste set G 1¼
- material waste set: synthetic
- connection dimension: DN15
- cold water in middle position

Chrome | 71072000 | 76.60

Air Power | Eco Smart | Comfort Zone | Cool Start

Alternative products:

- Single lever basin mixer 70 CoolStart without waste set — Chrome | 71073000 | 71.10

Measurements within scale drawings are in mm.

	finish	code no.	Euro



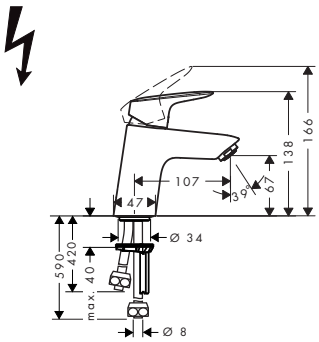

Single lever basin mixer 70 for vented hot water cylinders with push-open waste set
- consists of: single lever basin mixer, waste set
- ComfortZone 70
- projection 107 mm
- normal spray
- flow rate at 3 bar: 5 l/min
- ceramic cartridge
- temperature limitation adjustable
- push-open waste set G 1¼
- material waste set: synthetic

Chrome — 71074000 — 147.70

Eco Smart · Comfort Zone



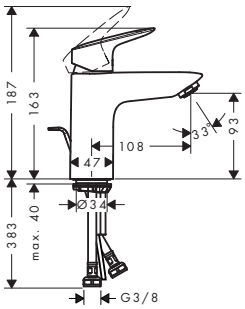

Single lever basin mixer 100 with pop-up waste set
- consists of: single lever basin mixer, waste set
- ComfortZone 100
- projection 108 mm
- normal spray
- flow rate at 3 bar: 5 l/min
- ceramic cartridge
- temperature limitation adjustable
- suitable for continuous flow water heaters
- pop-up waste set G 1¼
- material waste set: synthetic
- connection dimension: DN15

Chrome — 71100000 — 98.50

Air Power · Eco Smart · Comfort Zone

Alternative products:

· Single lever basin mixer 100 with metal pop-up waste set	Chrome	71171000	109.10
· Single lever basin mixer 100 with push-open waste set	Chrome	71107000	98.50
· Single lever basin mixer 100 LowFlow with pop-up waste set	Chrome	71104000	98.50
· Single lever basin mixer 100 without waste set	Chrome	71101000	93.00



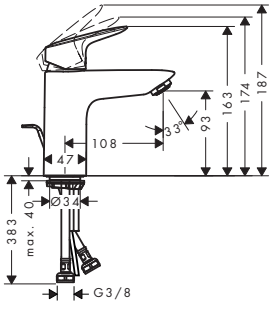

Single lever basin mixer 100 with 2 flow rates with pop-up waste set
- consists of: single lever basin mixer, waste set
- ComfortZone 100
- projection 108 mm
- normal spray
- flow rate at 3 bar: 9.5 l/min
- ceramic cartridge with 2 flow rates
- temperature limitation adjustable
- suitable for continuous flow water heaters
- pop-up waste set G 1¼
- material waste set: synthetic
- connection dimension: DN15
- cold water in middle position

Chrome — 71105000 — 98.50

Air Power · Eco Smart · Comfort Zone · Cool Start

Measurements within scale drawings are in mm.

Technical specifications and units of measure are subject to change.

	finish	code no.	Euro
Single lever basin mixer 100 CoolStart with pop-up waste set · consists of: single lever basin mixer, waste set · ComfortZone 100 · projection 108 mm · normal spray · flow rate at 3 bar: 5 l/min · ceramic cartridge · temperature limitation adjustable · suitable for continuous flow water heaters · pop-up waste set G 1¼ · material waste set: synthetic · connection dimension: DN15 · cold water in middle position	Chrome	71102000	98.50
Alternative products: · Single lever basin mixer 100 CoolStart without waste set	Chrome	71103000	93.00



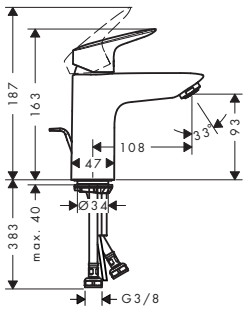

	finish	code no.	Euro
Single lever basin mixer 190 with pop-up waste set · consists of: single lever basin mixer, waste set · ComfortZone 190 · projection 166 mm · normal spray · flow rate at 3 bar: 5 l/min · ceramic cartridge · temperature limitation adjustable · suitable for continuous flow water heaters · pop-up waste set G 1¼ · material waste set: synthetic · connection dimension: DN15	Chrome	71090000	125.80
Alternative products: · Single lever basin mixer 190 without waste set	Chrome	71091000	120.30



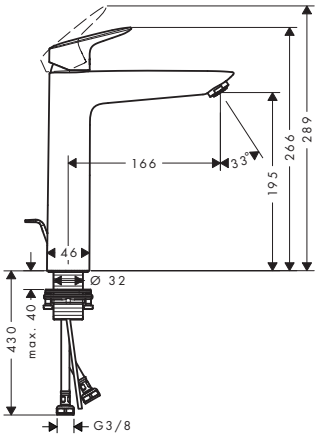

	finish	code no.	Euro
Single lever basin mixer 190 with 2 flow rates with pop-up waste set · consists of: single lever basin mixer, waste set · ComfortZone 190 · projection 166 mm · normal spray · flow rate at 3 bar: 9.5 l/min · ceramic cartridge with 2 flow rates · temperature limitation adjustable · suitable for continuous flow water heaters · pop-up waste set G 1¼ · material waste set: synthetic · connection dimension: DN15 · cold water in middle position	Chrome	71095000	125.80



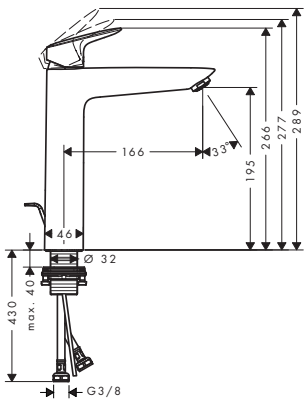

Measurements within scale drawings are in mm.

	finish	code no.	Euro
Single lever basin mixer 210 with swivel spout and pop-up waste set · consists of: single lever basin mixer, waste set · ComfortZone 210 · projection 154 mm · swivel range 120° · normal spray · flow rate at 3 bar: 5 l/min · ceramic cartridge · temperature limitation adjustable · suitable for continuous flow water heaters · pop-up waste set G 1¼ · material waste set: synthetic · connection dimension: DN15 · handle position on the side: bottom-side at the base body (not suitable for wash bowls)	Chrome	71130000	158.60
Alternative products: · Single lever basin mixer 210 with swivel spout without waste set	Chrome	71131000	153.20
2-handle basin mixer 150 with pop-up waste set · consists of: 2-handle basin mixer, waste set · ComfortZone 150 · projection 145 mm · swivel range 120° · normal spray · flow rate at 3 bar: 5 l/min · ceramic valves hot/ cold 90° · suitable for continuous flow water heaters · pop-up waste set G 1¼ · material waste set: synthetic · connection dimension: DN15	Chrome	71222000	98.50
Alternative products: · 2-handle basin mixer 150 without waste set	Chrome	71221000	93.00
3-hole basin mixer 150 with pop-up waste set · consists of: 3-hole basin mixer, waste set · ComfortZone 150 · projection 109 mm · flow rate at 3 bar: 5 l/min · ceramic valves hot/ cold 90° · suitable for continuous flow water heaters · pop-up waste set G 1¼ · material waste set: synthetic · connection dimension: DN15	Chrome	71133000	196.90
Single lever basin mixer for exposed installation wall-mounted · projection 194 mm · centre distance: 150 ± 12 mm · normal spray · flow rate at 3 bar: 5 l/min · ceramic cartridge · temperature limitation adjustable · with noise reduction · suitable for continuous flow water heaters · connection dimension: DN15	Chrome	71225000	109.40

Measurements within scale drawings are in mm.

Technical specifications and units of measure are subject to change.

	finish	code no.	Euro
 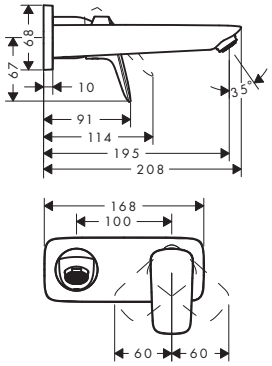			
Single lever basin mixer for concealed installation wall-mounted with spout 19.5 cm · consists of: Single lever basin mixer for concealed installation wall-mounted, waste set · projection 195 mm · normal spray · flow rate at 3 bar: 5 l/min · ceramic cartridge · temperature limitation adjustable · suitable for continuous flow water heaters · non-closing waste set · material waste set: metal · connection dimension: DN15 · handle can be positioned on the right or left, depends on the basic set installation	Chrome	71220000	147.70
Required parts: · Basic set for single lever basin mixer for concealed installation wall-mounted		13622180	210.00
 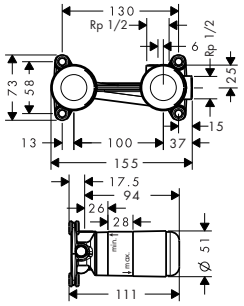			
Basic set for single lever basin mixer for concealed installation wall-mounted · variable positioning of the mixer system, can be left or right of the spout · connection dimension: DN15		13622180	210.00
Optional parts: · Extension set 2.5 cm		31971000	104.00
 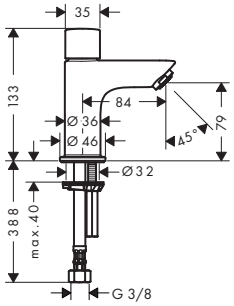			
Pillar tap 70 for cold water without waste set · ComfortZone 70 · projection 84 mm · normal spray · flow rate at 3 bar: 5 l/min · ceramic valves 90° · for cold water connection · connection dimension: DN15	Chrome	71120000	65.60
 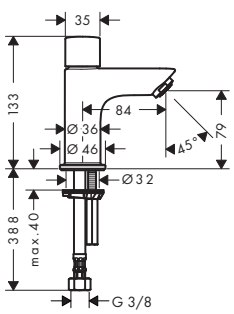			
Pillar tap 70 for hot water without waste set · ComfortZone 70 · projection 84 mm · normal spray · flow rate at 3 bar: 5 l/min · ceramic valves 90° · connection dimension: DN15	Chrome	71121000	65.60

Measurements within scale drawings are in mm.

Bidet

	finish	code no.	Euro
Single lever bidet mixer 70 with pop-up waste set · consists of: single lever bidet mixer, waste set · projection 119 mm · aerator with ball pivot · normal spray · flow rate at 3 bar: 7.2 l/min · ceramic cartridge · temperature limitation adjustable · suitable for continous flow water heaters · material waste set: synthetic · connection dimension: DN15	Chrome	71204000	82.00
Alternative products: · Single lever bidet mixer 70 with metal pop-up waste set	Chrome	71203000	89.50



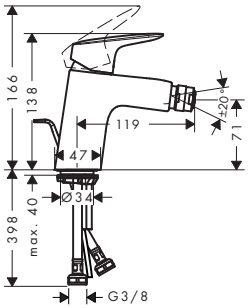

Single lever bidet mixer 100 with pop-up waste set — Chrome — 71200000 — 103.90

· consists of: single lever bidet mixer, waste set
· projection 119 mm
· aerator with ball pivot
· normal spray
· flow rate at 3 bar: 7.2 l/min
· ceramic cartridge
· temperature limitation adjustable
· suitable for continous flow water heaters
· material waste set: synthetic
· connection dimension: DN15



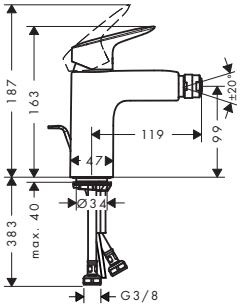

Single lever basin mixer with bidette hand shower and shower hose 160 cm — Chrome — 71290000 — 120.40

· consists of: single lever basin mixer, bidette hand shower, shower holder, shower hose
· ComfortZone 70
· flow rate at 3 bar: 5 l/min
· ceramic cartridge
· temperature limitation adjustable
· suitable for continuous flow water heaters
· connection dimension: DN15



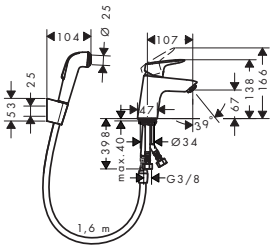

Single lever basin mixer with device shut-off valve with bidette hand shower and shower hose 160 cm — Chrome — 31515000 — 296.80

· consists of: single lever basin mixer, bidette hand shower, shower holder, shower hose
· ComfortZone 190
· swivel range 120°
· ceramic cartridge
· temperature limitation adjustable
· connection dimension: DN15



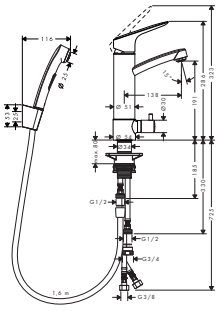

Bidet set with vertical spray — Chrome — 71629000 — 115.70

· consists of: Bidet mixer, vertical spray
· ceramic cartridge
· vertical spray and diverter
· integrated non-return valve
· efficient from 0.05 MPa onwards
· connection dimension: DN15



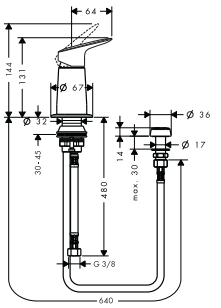

Measurements within scale drawings are in mm.

Technical specifications and units of measure are subject to change.

Bath

	finish	code no.	Euro
 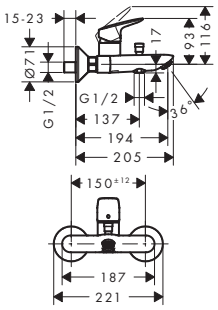			
Single lever bath mixer for exposed installation · projection 194 mm · connection type: s-shaped connections · centre distance: 150 ± 12 mm · spray type mixer: normal spray · flow rate for bath spout at 3 bar: 20 l/min · flow rate of hand shower at 3 bar: 17 l/min · ceramic cartridge · temperature limitation adjustable · with automatic resetting · non-return valve · with silencer · suitable for continous flow water heaters · connection dimension: DN15	Chrome	71400000	109.40
Alternative products:			
· Single lever bath mixer for exposed installation with centre distance 15.3 cm	Chrome	71430000	114.90
· Single lever bath mixer for exposed installation with 2 flow rates	Chrome	71401000	109.40
 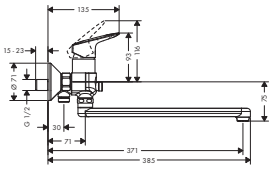			
Single lever bath mixer with long spout · projection 300 mm · connection type: s-shaped connections · centre distance: 150 ± 12 mm · spray type mixer: normal spray · flow rate at 3 bar: 22 l/min · ceramic cartridge · temperature limitation adjustable · with automatic resetting · suitable for continous flow water heaters · connection dimension: DN15	Chrome	71402000	149.60
 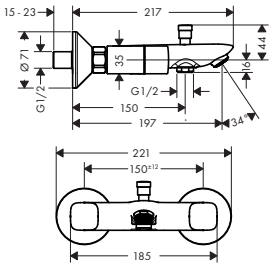			
2-handle bath mixer for exposed installation · connection type: s-shaped connections · centre distance: 150 ± 12 mm · flow rate for bath spout at 3 bar: 26 l/min · flow rate of hand shower at 3 bar: 17 l/min · ceramic valves hot/ cold 90° · with silencer · suitable for continous flow water heaters	Chrome	71243000	125.80
 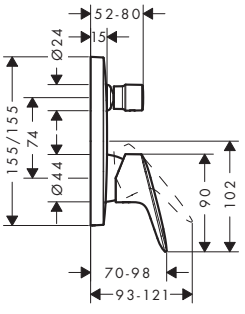			
Single lever bath mixer for concealed installation · connection type: basic set · ceramic cartridge · temperature limitation adjustable · with automatic resetting	Chrome	71405000	114.90
Alternative products:			
· Single lever bath mixer for concealed installation with integrated security combination according to EN1717	Chrome	71407000	180.50
Required parts:			
· Basic set iBox universal		01800180	130.80

Measurements within scale drawings are in mm.

	finish	code no.	Euro
 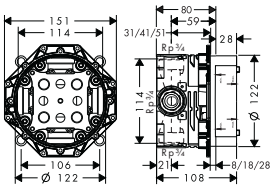 **NEW**			
Basic set iBox universal · connection thread Rp ¾ · suitable for all shower, bath tub and thermostat finish sets for concealed installation · rotationally-symmetric installation · sound-decoupled installation · connection dimension: DN20		01800180	130.80
Alternative products: · Basic set iBox universal with shut-off unit		01850180	169.90
Optional parts: · Extension iBox universal basic set 2.5 cm · Fastening rail set for iBox universal · Assembly aid for iBox universal		13595000 96615000 93500000	46.50 33.00 12.00
 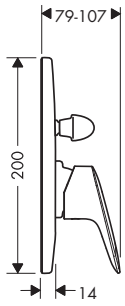			
Single lever bath mixer for concealed installation · connection type: basic set · ceramic cartridge · temperature limitation adjustable · with automatic resetting	Chrome	71406000	40.90
Required parts: · Basic set for single lever bath mixer for concealed installation		31741180	118.60
 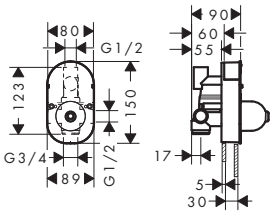			
Basic set for single lever bath mixer for concealed installation · ceramic cartridge · connection dimension: DN15		31741180	118.60
 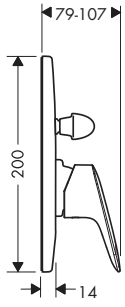			
Single lever bath mixer set for concealed installation · consists of: Single lever bath mixer, basic set · connection type: basic set · ceramic cartridge	Chrome	71409000	154.50
Consisting of: · Single lever bath mixer for concealed installation (# 71406000) · Basic set for single lever bath mixer for concealed installation (# 31741180)			
 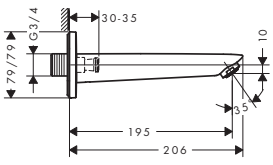			
Bath spout · with escutcheon · projection 195 mm · wall-mounted · connection dimension: DN20 · spray type: normal spray	Chrome	71410000	85.00

Measurements within scale drawings are in mm.

Technical specifications and units of measure are subject to change.

	finish	code no.	Euro
 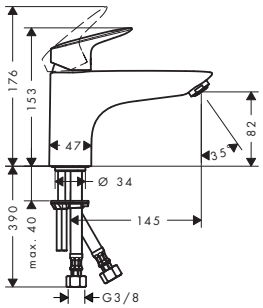			
Single lever bath mixer Monotrou · projection 145 mm · connection type: G ⅜ connections · spray type mixer: normal spray · flow rate at 3 bar: 20 l/ min · ceramic cartridge · temperature limitation adjustable · non-return valve · suitable for continous flow water heaters · connection dimension: DN15	Chrome	71311000	107.10
 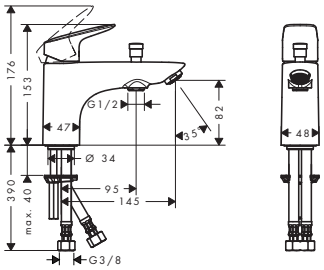			
Single lever bath and shower mixer Monotrou · projection 145 mm · connection type: G ⅜ connections · spray type mixer: normal spray · flow rate at 3 bar: 20 l/ min · ceramic cartridge · temperature limitation adjustable · with automatic resetting · suitable for continous flow water heaters · connection dimension: DN15	Chrome	71312000	117.00
Alternative products: · Single lever bath and shower mixer Monotrou with 2 flow rates	Chrome	71315000	117.00
 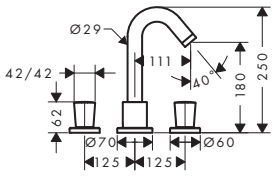			
3-hole rim mounted bath mixer · projection 111 mm · connection type: G ⅜ connections · flow rate at 3 bar: 22 l/ min · connection dimension: DN15	Chrome	71300000	164.10
Required parts: · Basic set for 3-hole rim mounted bath mixer		13233180	179.70
 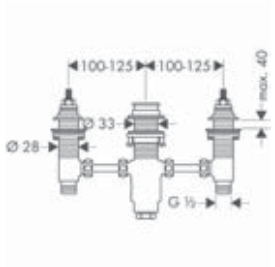			
Basic set for 3-hole rim mounted bath mixer · maintenance opening required · connection thread: G ½ · connection dimension: DN15 · ceramic valves hot/ cold 90°		13233180	179.70

Measurements within scale drawings are in mm.

Technical specifications and units of measure are subject to change.

	finish	code no.	Euro
 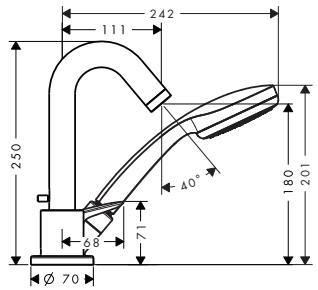			
3-hole rim mounted single lever bath mixer with Secuflex · consists of: 3-hole rim mounted single lever bath mixer, hand shower, shower hose, shower holder · projection 111 mm · connection type: basic set · spray type mixer: normal spray · spray type hand shower: Rain · maximum pull-out length of hand shower: 1.10 m · flow rate at 3 bar: 22 l/min · ceramic cartridge · temperature limitation adjustable · non-return valve · connection dimension: DN15	Chrome	71310000	437.60
Consisting of: · Hand shower Mono (# 28580000)			
Required parts: · Basic set for 3-hole rim mounted single lever bath mixer		13437180	653.90
 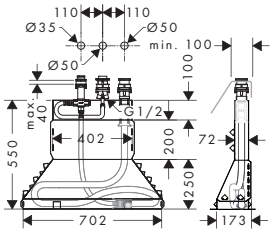			
Basic set for 3-hole rim mounted single lever bath mixer · consists of: basic set, shower hose, Secubox · maximum pull-out length of hand shower: 1.10 m · connection dimension: DN15		13437180	653.90
Optional parts: · Secuflex insert extension		98806000	3.70
 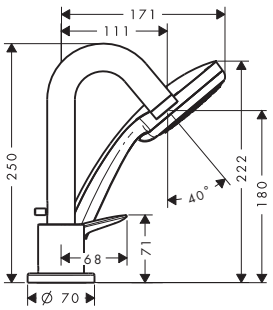			
3-hole rim mounted single lever bath mixer · consists of: 3-hole rim mounted single lever bath mixer, hand shower · projection 111 mm · connection type: basic set · spray type mixer: normal spray · spray type hand shower: Rain · flow rate at 3 bar: 22 l/min · ceramic cartridge · temperature limitation adjustable · connection dimension: DN15	Chrome	71313000	300.80
Consisting of: · Hand shower Mono (# 28580000)			
Required parts: · Basic set for 3-hole rim mounted single lever bath mixer		13439180	333.40
 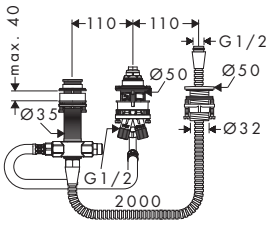			
Basic set for 3-hole rim mounted single lever bath mixer · consists of: basic set, shower holder, shower hose · maintenance opening required · ceramic cartridge		13439180	333.40

Measurements within scale drawings are in mm.

Technical specifications and units of measure are subject to change.

	finish	code no.	Euro
 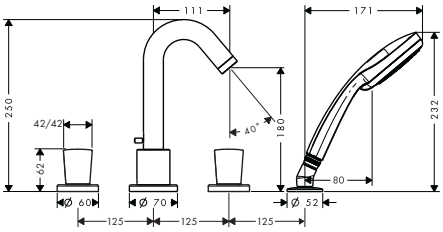	**4-hole rim mounted bath mixer** · consists of: 4-hole rim mounted bath mixer, hand shower, shower holder · projection 111 mm · connection type: basic set · flow rate at 3 bar: 22 l/ min · non-return valve · connection dimension: DN15 · with integrated safety combination EN1717 **Consisting of:** · Hand shower Mono (# 28580000) **Required parts:**	Chrome	71314000	300.80
	· Basic set for 4-hole rim mounted bath mixer		13244180	275.20
 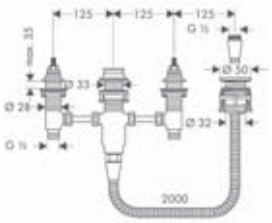	**Basic set for 4-hole rim mounted bath mixer** · consists of: basic set, shower holder, shower hose · maintenance opening required · suitable for 4-hole rim mounted bath mixer · connection thread: G ½ · connection dimension: DN15 · ceramic valves hot/ cold 90°		13244180	275.20
Shower				
 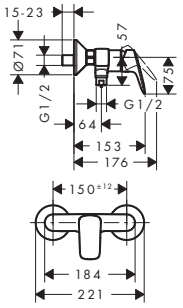	**Single lever shower mixer for exposed installation** · 1 outlet · connection type: s-shaped connections · centre distance: 150 ± 12 mm · flow rate of hand shower at 3 bar: 17 l/ min · ceramic cartridge · temperature limitation adjustable · non-return valve · with silencer · hose connection DN15 · connection dimension: DN15 **Alternative products:**	Chrome	71600000	87.50
	· Single lever shower mixer for exposed installation with centre distance 15.3 cm	Chrome	71630000	93.00
	· Single lever shower mixer for exposed installation with 2 flow rates	Chrome	71601000	87.50
 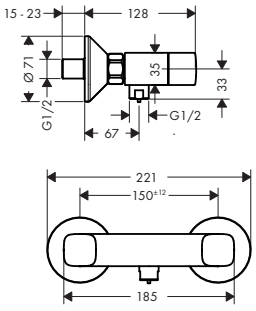	**2-handle shower mixer for exposed installation** · connection type: s-shaped connections · centre distance: 150 ± 12 mm · flow rate of hand shower at 3 bar: 17 l/ min · ceramic valves hot/ cold 90° · non-return valve · with silencer · suitable for continous flow water heaters · hose connection DN15	Chrome	71263000	103.90
 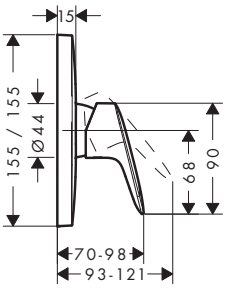	**Single lever shower mixer for concealed installation** · 1 outlet · connection type: basic set · ceramic cartridge · temperature limitation adjustable **Required parts:**	Chrome	71605000	98.50
	· Basic set iBox universal		01800180	130.80
	Optional parts: · Extension element	Chrome	15597000	43.00

Measurements within scale drawings are in mm.

	finish	code no.	Euro
 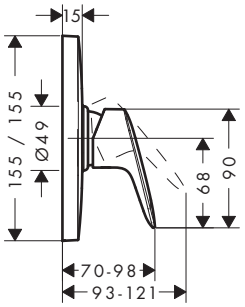			
Single lever shower mixer HighFlow for concealed installation · flow rate at 3 bar: 49 l/min · ceramic cartridge (Highflow) · temperature limitation adjustable	Chrome	71607000	98.50
Required parts:			
· Basic set iBox universal with shut-off unit		01850180	169.90
· Basic set iBox universal		01800180	130.80
Optional parts:			
· Basic set for Trio diverter valve for concealed installation		15984180	153.20
 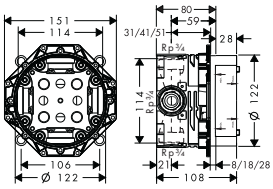			
Basic set iBox universal · connection thread Rp ¾ · suitable for all shower, bath tub and thermostat finish sets for concealed installation · rotationally-symmetric installation · sound-decoupled installation · connection dimension: DN20		01800180	130.80
Alternative products:			
· Basic set iBox universal with shut-off unit		01850180	169.90
Optional parts:			
· Extension iBox universal basic set 2.5 cm		13595000	46.50
· Fastening rail set for iBox universal		96615000	33.00
· Assembly aid for iBox universal		93500000	12.00
NEW			
 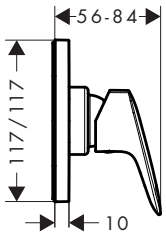			
Single lever shower mixer for concealed installation · 1 outlet · connection type: basic set · flow rate at 3 bar: 28.7 l/min · min. operating pressure: 1 bar · max. operating pressure: 10 bar	Chrome	71604000	32.80
Required parts:			
· Basic set for single lever shower mixer for concealed installation		13620180	105.30
 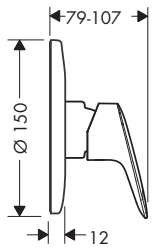			
Single lever shower mixer for concealed installation · 1 outlet · connection type: basic set · flow rate at 3 bar: 28.7 l/min · min. operating pressure: 1 bar · max. operating pressure: 10 bar	Chrome	71606000	32.80
Required parts:			
· Basic set for single lever shower mixer for concealed installation		13620180	105.30
 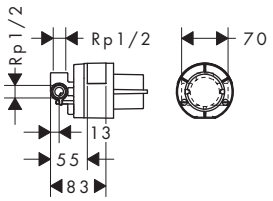			
Basic set for single lever shower mixer for concealed installation · ceramic cartridge · connection dimension: DN15		13620180	105.30

Measurements within scale drawings are in mm.

Technical specifications and units of measure are subject to change.

	finish	code no.	Euro
 **Shower mixer set for concealed installation** · consists of: single lever shower mixer, basic set · 1 outlet · connection type: basic set · ceramic cartridge **Consisting of:** · Basic set for single lever shower mixer for concealed installation (# 13620180) · Single lever shower mixer for concealed installation (# 71606000)	Chrome	71666000	122.60

Valve

 **Shut-off valve for concealed installation** · connection type: DN15/DN20	Chrome	71970000	27.40
Required parts:			
· Basic set 52 l/min for shut-off valve for concealed installation spindle		15973180	80.60
· Basic set 40 l/min for shut-off valve for concealed installation ceramic		15974180	83.70
· Basic set 130 l/min for shut-off valve for concealed installation spindle		15970180	87.50
Optional parts:			
· Extension set 2.5 cm		96370000	44.80

 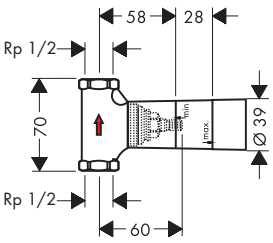 **Basic set 52 l/min for shut-off valve for concealed installation spindle** · connection type: DN15 · suitable for all shut-off valves finish sets · flow rate: 52 l/min · connection dimension: DN15		15973180	80.60
Alternative products:			
· Basic set 40 l/min for shut-off valve for concealed installation ceramic		15974180	83.70
· Basic set 130 l/min for shut-off valve for concealed installation spindle		15970180	87.50
Optional parts:			
· Extension set 2.5 cm		96370000	44.80

 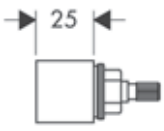 **Extension set 2.5 cm** · extension length: 25 mm		96370000	44.80

Measurements within scale drawings are in mm.

Technical specifications and units of measure are subject to change.

Electronic- and project mixers/ Care assortment



Electronic mixers	page 397		CoolStart mixers	page 400	
LowFlow mixers	page 404		Focus Care mixers	page 407	
Novus Care mixers	page 409		Unica Comfort shower sets and wall bars	page 410	
Unica Comfort Accessories	page 413		Hand showers	page 414	

Electronic- and project mixers / Care assortement

Basin



no.15170000, -400



no.31100000



no.31171000



no.31911000*



no.31913000

Bath



no.13115000



no.26320000, -400

Shower



no.13117000



no.31916000



no.26326000, -400

Accessories



no.26328400



no.26329000

* as an example

Basin - PuraVida



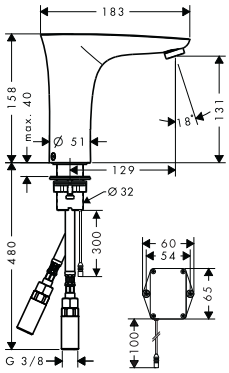

	finish	code no.	Euro
Electronic basin mixer with temperature control battery operation	Chrome	15170000	828.50
	White/Chrome	15170400	828.50

Air Power · Eco Smart · Comfort Zone

- ComfortZone 130
- projection 129 mm
- flow rate at 3 bar: 5 l/min
- theft-proof aerator
- temperature limitation adjustable
- temperature adjustable via mixer lever on the side
- non-return valve
- suitable for continous flow water heaters
- infrared sensor technology
- automatic environmental adjustment of infrared sensor
- adjustable optical range of infrared sensor (2 settings)
- battery condition indicator available
- battery operation 6 V (Lithium battery, lifetime approx. 2 years, battery included in scope of delivery)
- hygiene rinse activatable (automatic water flow for 10 seconds every 24 hours following the last operation)
- permanent rinse activatable (single water flow for 180 seconds, suitable for thermal disinfection)
- manual water stop for washbasin cleaning
- performance may be impaired if the sensor is obscured by the design of the wash basin, or when the wash basin is oversized and the distance between sensor and the wash basin edge is larger than 75 mm
- functional restriction due to too large distance
- connection dimension: DN15
- TÜV certified
- dirt filters in the connection hoses
- two filter units with fine filter to protect from incoming dirt, for assembly on existing angle valves, filter element can be removed and cleaned

Alternative products:

· Electronic basin mixer with temperature control mains connection 230 V	Chrome	15172000	863.10

Measurements within scale drawings are in mm.

Basin - Metris S



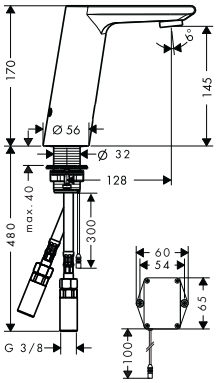

	finish	code no.	Euro
Electronic basin mixer with temperature control battery operation · ComfortZone 150 · projection 128 mm · flow rate at 3 bar: 5 l/ min · theft-proof aerator · temperature limitation adjustable · temperature adjustable via mixer lever on the side · non-return valve · suitable for continous flow water heaters · infrared sensor technology · automatic environmental adjustment of infrared sensor · adjustable optical range of infrared sensor (2 settings) · battery condition indicator available · battery operation 6 V (Lithium battery, lifetime approx. 2 years, battery included in scope of delivery) · hygiene rinse activatable (automatic water flow for 10 seconds every 24 hours following the last operation) · permanent rinse activatable (single water flow for 180 seconds, suitable for thermal disinfection) · manual water stop for washbasin cleaning · performance may be impaired if the sensor is obscured by the design of the wash basin, or when the wash basin is oversized and the distance between sensor and the wash basin edge is larger than 75 mm · functional restriction due to too large distance · connection dimension: DN15 · TÜV certified · dirt filters in the connection hoses · two filter units with fine filter to protect from incoming dirt, for assembly on existing angle valves, filter element can be removed and cleaned	Chrome	31100000 Air Power · Eco Smart · Comfort Zone	680.50
Alternative products:			
· Electronic basin mixer with temperature pre-adjustment battery operation	Chrome	31101000	627.60
· Electronic basin mixer with temperature control mains connection 230 V	Chrome	31102000	721.40
· Electronic basin mixer with temperature pre-adjustment mains connection 230 V	Chrome	31103000	667.00

Measurements within scale drawings are in mm.

Technical specifications and units of measure are subject to change.

Basin - Focus



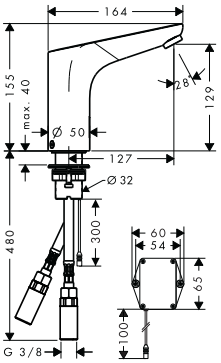

	finish	code no.	Euro
Electronic basin mixer with temperature control battery operation · ComfortZone 130 · projection 127 mm · flow rate at 3 bar: 5 l/ min · theft-proof aerator · temperature limitation adjustable · temperature adjustable via mixer lever on the side · non-return valve · suitable for continous flow water heaters · infrared sensor technology · automatic environmental adjustment of infrared sensor · adjustable optical range of infrared sensor (2 settings) · battery condition indicator available · battery operation 6 V (Lithium battery, lifetime approx. 2 years, battery included in scope of delivery) · hygiene rinse activatable (automatic water flow for 10 seconds every 24 hours following the last operation) · permanent rinse activatable (single water flow for 180 seconds, suitable for thermal disinfection) · manual water stop for washbasin cleaning · performance may be impaired if the sensor is obscured by the design of the wash basin, or when the wash basin is oversized and the distance between sensor and the wash basin edge is larger than 75 mm · functional restriction due to too large distance · connection dimension: DN15 · TÜV certified · dirt filters in the connection hoses · two filter units with fine filter to protect from incoming dirt, for assembly on existing angle valves, filter element can be removed and cleaned	Chrome	31171000 Air Power Eco Smart Comfort Zone	472.70
Alternative products:			
· Electronic basin mixer with temperature pre-adjustment battery operation	Chrome	31172000	429.00
· Electronic basin mixer with temperature control mains connection 230 V	Chrome	31173000	494.70
· Electronic basin mixer with temperature pre-adjustment mains connection 230 V	Chrome	31174000	473.30

Measurements within scale drawings are in mm.

CoolStart - Metropol



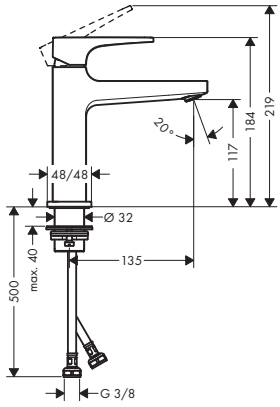

		finish	code no.	Euro
Single lever basin mixer 110 CoolStart with lever handle and push-open waste set · consists of: single lever basin mixer, waste set · ComfortZone 110 · projection 135 mm · normal spray · flow rate at 3 bar: 5 l/min · ceramic cartridge · temperature limitation adjustable · suitable for continuous flow water heaters · push-open waste set G 1¼ · material waste set: metal · connection dimension: DN15 · cold water in middle position		Chrome	32508000	273.90
Alternative products:				
· Single lever basin mixer 110 with lever handle and pop-up waste set		Chrome	32506000	263.50
· Single lever basin mixer 110 with lever handle and push-open waste set		Chrome	32507000	268.70
	NEW	Brushed Bronze	32507140	403.50
	NEW	Brushed Black Chrome	32507340	403.50
	NEW	Matt Black	32507670	375.80
	NEW	Matt White	32507700	375.80
	NEW	Polished Gold Optic	32507990	403.50



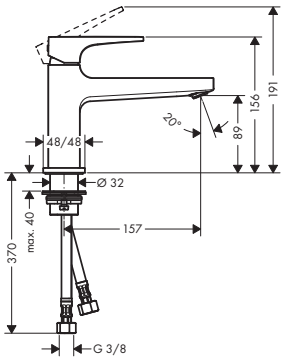

Single lever basin mixer 100 CoolStart with lever handle and push-open waste set · consists of: single lever basin mixer, waste set · ComfortZone 100 · projection 157 mm · normal spray · flow rate at 3 bar: 5 l/min · ceramic cartridge · temperature limitation adjustable · suitable for continuous flow water heaters · push-open waste set G 1¼ · material waste set: metal · connection dimension: DN15 · cold water in middle position		Chrome	32503000	258.20
Alternative products:				
· Single lever basin mixer 100 with lever handle and push-open waste set		Chrome	32502000	252.90

CoolStart - Metris



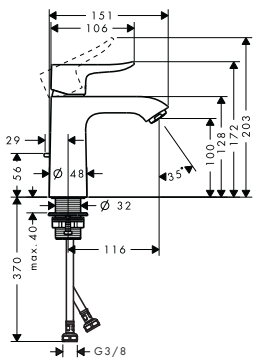

		finish	code no.	Euro
Single lever basin mixer 110 CoolStart with pop-up waste set · consists of: single lever basin mixer, waste set · ComfortZone 110 · normal spray · flow rate at 3 bar: 5 l/min · ceramic cartridge · temperature limitation adjustable · suitable for continuous flow water heaters · pop-up waste set G 1¼ · material waste set: metal · connection dimension: DN15 · cold water in middle position		Chrome	31121000	234.10

Measurements within scale drawings are in mm.

Technical specifications and units of measure are subject to change.

CoolStart - Talis E



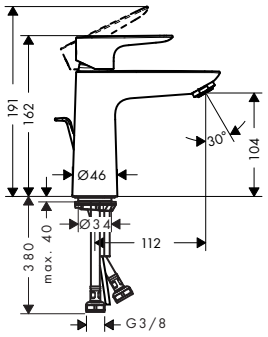

	finish	code no.	Euro
Single lever basin mixer 110 CoolStart with pop-up waste set	Chrome	71713000	131.20
	NEW Brushed Bronze	71713140	196.60
	NEW Brushed Black	71713340	196.60
	Chrome		
	NEW Matt Black	71713670	184.30
	NEW Matt White	71713700	184.30
	NEW Polished Gold Optic	71713990	196.60

Air Power · Eco Smart · Quick Clean · Comfort Zone · Cool Start

- consists of: single lever basin mixer, waste set
- ComfortZone 110
- projection 112 mm
- normal spray
- flow rate at 3 bar: 5 l/min
- ceramic cartridge
- temperature limitation adjustable
- suitable for continuous flow water heaters
- pop-up waste set G 1¼
- material waste set: metal
- connection dimension: DN15
- cold water in middle position

Alternative products:

· Single lever basin mixer 110 CoolStart without waste set	Chrome	71714000	124.40
	NEW Brushed Bronze*	71714140	186.60
	NEW Brushed Black	71714340	186.60
	Chrome*		
	NEW Matt Black*	71714670	174.20
	NEW Matt White*	71714700	174.20
	NEW Polished Gold Optic*	71714990	186.60

***available from April 2020**



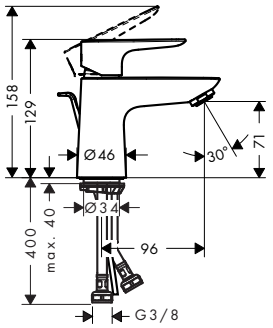

Single lever basin mixer 80 CoolStart with pop-up waste set — Chrome — 71703000 — 107.50

Air Power · Eco Smart · Quick Clean · Comfort Zone · Cool Start

- consists of: single lever basin mixer, waste set
- ComfortZone 80
- projection 96 mm
- normal spray
- flow rate at 3 bar: 5 l/min
- ceramic cartridge
- temperature limitation adjustable
- suitable for continuous flow water heaters
- pop-up waste set G 1¼
- material waste set: metal
- connection dimension: DN15
- cold water in middle position

Alternative products:

· Single lever basin mixer 80 CoolStart without waste set	Chrome	71704000	100.80

CoolStart - Talis S



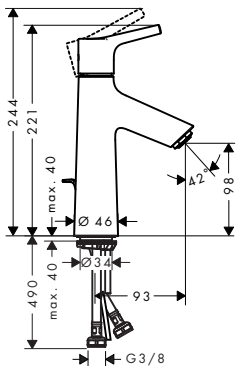

Single lever basin mixer 100 CoolStart with pop-up waste set — Chrome — 72022000 — 155.00

Air Power · Eco Smart · Quick Clean · Comfort Zone · Cool Start

- consists of: single lever basin mixer, waste set
- ComfortZone 100
- projection 93 mm
- normal spray
- flow rate at 3 bar: 5 l/min
- ceramic cartridge
- temperature limitation adjustable
- suitable for continuous flow water heaters
- pop-up waste set G 1¼
- material waste set: metal
- connection dimension: DN15
- cold water in middle position

Alternative products:

· Single lever basin mixer 100 CoolStart without waste set	Chrome	72023000	148.20

Measurements within scale drawings are in mm.

	finish	code no.	Euro



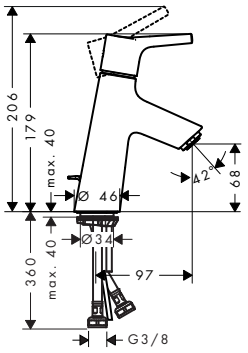

Single lever basin mixer 80 CoolStart with pop-up waste set
- consists of: single lever basin mixer, waste set
- ComfortZone 80
- projection 97 mm
- normal spray
- flow rate at 3 bar: 5 l/min
- ceramic cartridge
- temperature limitation adjustable
- suitable for continuous flow water heaters
- pop-up waste set G 1¼
- material waste set: metal
- connection dimension: DN15
- cold water in middle position

Chrome — 72013000 — 131.20

Alternative products:
- Single lever basin mixer 80 CoolStart without waste set

Chrome — 72014000 — 124.40

CoolStart - Focus



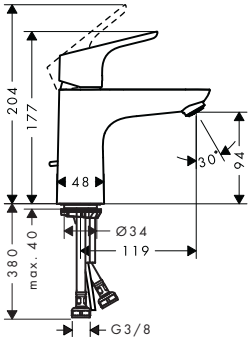

Single lever basin mixer 100 CoolStart with pop-up waste set
- consists of: single lever basin mixer, waste set
- ComfortZone 100
- projection 119 mm
- normal spray
- flow rate at 3 bar: 5 l/min
- ceramic cartridge
- temperature limitation adjustable
- suitable for continuous flow water heaters
- pop-up waste set G 1¼
- material waste set: metal
- connection dimension: DN15
- cold water in middle position

Chrome — 31621000 — 129.50

Alternative products:
- Single lever basin mixer 100 CoolStart without waste set

Chrome — 31509000 — 123.00



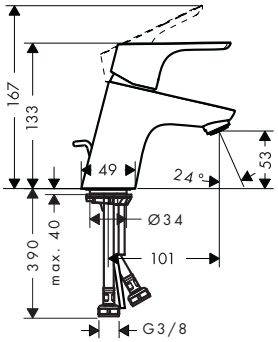

Single lever basin mixer 70 CoolStart with pop-up waste set
- consists of: single lever basin mixer, waste set
- ComfortZone 70
- projection 101 mm
- normal spray
- flow rate at 3 bar: 5 l/min
- ceramic cartridge
- temperature limitation adjustable
- suitable for continuous flow water heaters
- pop-up waste set G 1¼
- material waste set: metal
- connection dimension: DN15
- cold water in middle position

Chrome — 31539000 — 105.30

CoolStart - Focus Care



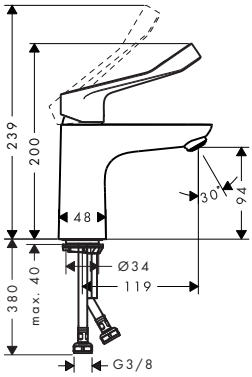

Single lever basin mixer 100 CoolStart with extra long handle without waste set
- ComfortZone 100
- larger print for greater clarity
- with extra long barrier-free handle
- projection 119 mm
- laminar spray
- flow rate at 3 bar: 5 l/min
- ceramic cartridge
- temperature limitation adjustable
- suitable for continuous flow water heaters
- connection dimension: DN15
- cold water in middle position

Chrome — 31917000 — 135.50

Measurements within scale drawings are in mm.

Technical specifications and units of measure are subject to change.

CoolStart - Novus



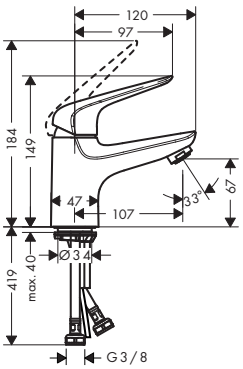

	finish	code no.	Euro
Single lever basin mixer 70 CoolStart with push-open waste set · consists of: single lever basin mixer, waste set · ComfortZone 70 · projection 107 mm · normal spray · flow rate at 3 bar: 5 l/min · ceramic cartridge · temperature limitation adjustable · suitable for continuous flow water heaters · push-open waste set G 1¼ · material waste set: synthetic · connection dimension: DN15 · cold water in middle position	Chrome	71022000	92.20



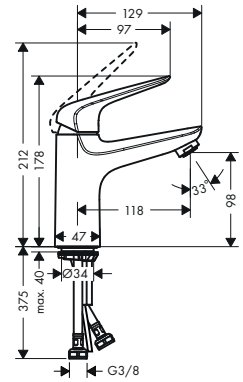

	finish	code no.	Euro
Single lever basin mixer 100 CoolStart with push-open waste set · consists of: single lever basin mixer, waste set · ComfortZone 100 · projection 118 mm · normal spray · flow rate at 3 bar: 5 l/min · ceramic cartridge · temperature limitation adjustable · suitable for continuous flow water heaters · push-open waste set G 1¼ · material waste set: synthetic · connection dimension: DN15 · cold water in middle position	Chrome	71032000	112.60

CoolStart - Logis



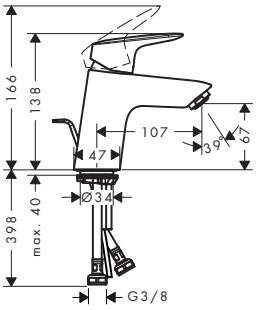

	finish	code no.	Euro
Single lever basin mixer 70 CoolStart with pop-up waste set · consists of: single lever basin mixer, waste set · ComfortZone 70 · projection 107 mm · normal spray · flow rate at 3 bar: 5 l/min · ceramic cartridge · temperature limitation adjustable · suitable for continuous flow water heaters · pop-up waste set G 1¼ · material waste set: synthetic · connection dimension: DN15 · cold water in middle position	Chrome	71072000	76.60
Alternative products: · Single lever basin mixer 70 CoolStart without waste set	Chrome	71073000	71.10



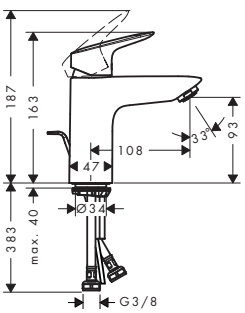

	finish	code no.	Euro
Single lever basin mixer 100 CoolStart with pop-up waste set · consists of: single lever basin mixer, waste set · ComfortZone 100 · projection 108 mm · normal spray · flow rate at 3 bar: 5 l/min · ceramic cartridge · temperature limitation adjustable · suitable for continuous flow water heaters · pop-up waste set G 1¼ · material waste set: synthetic · connection dimension: DN15 · cold water in middle position	Chrome	71102000	98.50
Alternative products: · Single lever basin mixer 100 CoolStart without waste set	Chrome	71103000	93.00

Measurements within scale drawings are in mm.

Technical specifications and units of measure are subject to change.

LowFlow - Metris



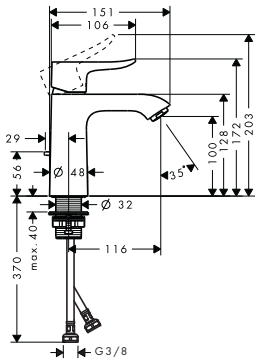

	finish	code no.	Euro
Single lever basin mixer 110 LowFlow with pop-up waste set · consists of: single lever basin mixer, waste set · ComfortZone 110 · projection 116 mm · normal spray · flow rate at 3 bar: 3.5 l/min · ceramic cartridge · temperature limitation adjustable · suitable for continuous flow water heaters · pop-up waste set G 1¼ · material waste set: metal · connection dimension: DN15	Chrome	31203000	234.10
Alternative products:			
· Single lever basin mixer 110 with pop-up waste set	Chrome	31080000	230.00
· Single lever basin mixer 110 LowFlow without waste set	Chrome	31204000	228.50

LowFlow - Metris S



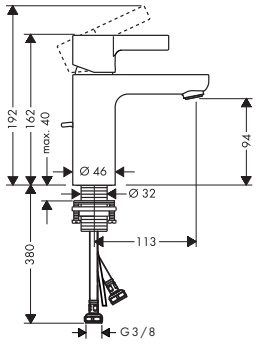

	finish	code no.	Euro
Single lever basin mixer 100 LowFlow 3.5 l/min with pop-up waste set · consists of: single lever basin mixer, waste set · ComfortZone 100 · projection 113 mm · normal spray · flow rate at 3 bar: 3.5 l/min · ceramic cartridge · temperature limitation adjustable · suitable for continuous flow water heaters · pop-up waste set G 1¼ · material waste set: metal · connection dimension: DN15	Chrome	31063000	251.20
Alternative products:			
· Single lever basin mixer 100 LowFlow 2 l/min with pop-up waste set	Chrome	31016000	253.30

LowFlow - Talis E



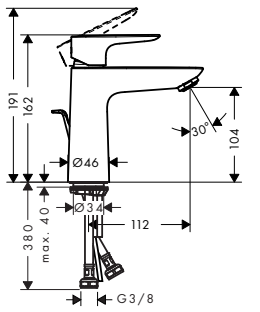

		finish	code no.	Euro
Single lever basin mixer 110 LowFlow with pop-up waste set · consists of: single lever basin mixer, waste set · ComfortZone 110 · projection 112 mm · normal spray · flow rate at 3 bar: 3.5 l/min · ceramic cartridge · temperature limitation adjustable · suitable for continuous flow water heaters · pop-up waste set G 1¼ · material waste set: metal · connection dimension: DN15		Chrome	71715000	131.20
Alternative products:				
· Single lever basin mixer 110 with pop-up waste set		Chrome	71710000	131.20
	NEW	Brushed Bronze	71710140	196.60
	NEW	Brushed Black Chrome	71710340	196.60
	NEW	Matt Black	71710670	184.30
	NEW	Matt White	71710700	184.30
	NEW	Polished Gold Optic	71710990	196.60

Measurements within scale drawings are in mm.

Technical specifications and units of measure are subject to change.

LowFlow - Talis S

	finish	code no.	Euro
 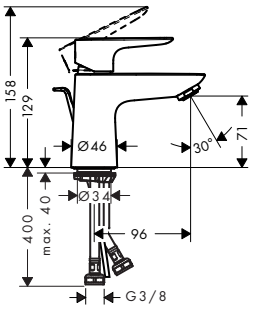	**Single lever basin mixer 80 LowFlow with pop-up waste set** · consists of: single lever basin mixer, waste set · ComfortZone 80 · projection 96 mm · normal spray · flow rate at 3 bar: 3.5 l/min · ceramic cartridge · temperature limitation adjustable · suitable for continuous flow water heaters · pop-up waste set G 1¼ · material waste set: metal · connection dimension: DN15	Chrome	71705000	107.50
	Alternative products: · Single lever basin mixer 80 with pop-up waste set	Chrome	71700000	107.50
 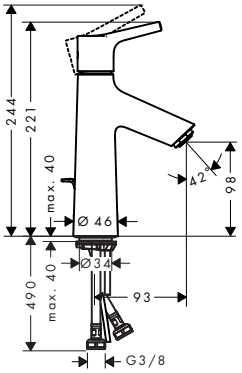	**Single lever basin mixer 100 LowFlow with pop-up waste set** · consists of: single lever basin mixer, waste set · ComfortZone 100 · projection 93 mm · normal spray · flow rate at 3 bar: 3.5 l/min · ceramic cartridge · temperature limitation adjustable · suitable for continuous flow water heaters · pop-up waste set G 1¼ · material waste set: metal · connection dimension: DN15	Chrome	72024000	155.00
	Alternative products: · Single lever basin mixer 100 with pop-up waste set	Chrome	72020000	155.00
	· Single lever basin mixer 100 LowFlow without waste set	Chrome	72025000	148.20
 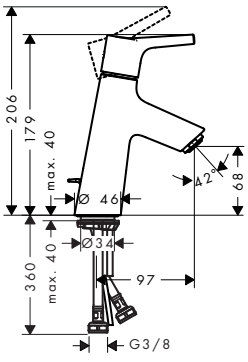	**Single lever basin mixer 80 LowFlow with pop-up waste set** · consists of: single lever basin mixer, waste set · ComfortZone 80 · projection 97 mm · normal spray · flow rate at 3 bar: 3.5 l/min · ceramic cartridge · temperature limitation adjustable · suitable for continuous flow water heaters · pop-up waste set G 1¼ · material waste set: metal · connection dimension: DN15	Chrome	72015000	131.20
	Alternative products: · Single lever basin mixer 80 with pop-up waste set	Chrome	72010000	131.20
	· Single lever basin mixer 80 LowFlow without waste set	Chrome	72018000	124.40

Measurements within scale drawings are in mm.

Technical specifications and units of measure are subject to change.

LowFlow - Focus



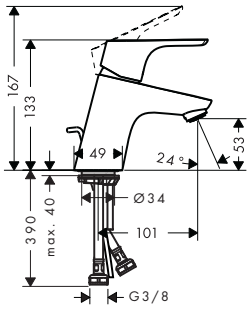

	finish	code no.	Euro
Single lever basin mixer 70 LowFlow with pop-up waste set · consists of: single lever basin mixer, waste set · ComfortZone 70 · projection 101 mm · normal spray · flow rate at 3 bar: 3.5 l/min · ceramic cartridge · temperature limitation adjustable · suitable for continuous flow water heaters · pop-up waste set G 1¼ · material waste set: metal · connection dimension: DN15	Chrome	31951000	101.50
Alternative products: · Single lever basin mixer 70 LowFlow without waste set	Chrome	31952000	94.40



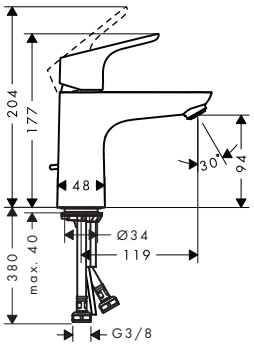

	finish	code no.	Euro
Single lever basin mixer 100 LowFlow with pop-up waste set · consists of: single lever basin mixer, waste set · ComfortZone 100 · projection 119 mm · normal spray · flow rate at 3 bar: 3.5 l/min · ceramic cartridge · temperature limitation adjustable · suitable for continuous flow water heaters · pop-up waste set G 1¼ · material waste set: metal · connection dimension: DN15	Chrome	31603000	124.70
Alternative products: · Single lever basin mixer 100 LowFlow without waste set	Chrome	31513000	118.60

LowFlow - Novus



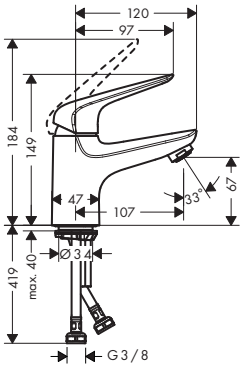

	finish	code no.	Euro
Single lever basin mixer 70 LowFlow with push-open waste set · consists of: single lever basin mixer, waste set · ComfortZone 70 · projection 107 mm · normal spray · flow rate at 3 bar: 3.5 l/min · ceramic cartridge · temperature limitation adjustable · suitable for continuous flow water heaters · push-open waste set G 1¼ · material waste set: synthetic · connection dimension: DN15	Chrome	71024000	92.20



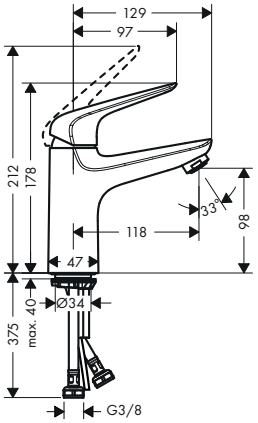

	finish	code no.	Euro
Single lever basin mixer 100 LowFlow with push-open waste set · consists of: single lever basin mixer, waste set · ComfortZone 100 · projection 118 mm · normal spray · flow rate at 3 bar: 3.5 l/min · ceramic cartridge · temperature limitation adjustable · suitable for continuous flow water heaters · push-open waste set G 1¼ · material waste set: synthetic · connection dimension: DN15	Chrome	71034000	112.60

Measurements within scale drawings are in mm.

Technical specifications and units of measure are subject to change.

LowFlow - Logis



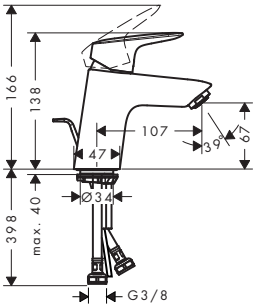

	finish	code no.	Euro
Single lever basin mixer 70 LowFlow with pop-up waste set · consists of: single lever basin mixer, waste set · ComfortZone 70 · projection 107 mm · normal spray · flow rate at 3 bar: 3.5 l/min · ceramic cartridge · temperature limitation adjustable · suitable for continuous flow water heaters · pop-up waste set G 1¼ · material waste set: synthetic · connection dimension: DN15	Chrome	71078000	76.60
Alternative products:			
· Single lever basin mixer 70 without waste set	Chrome	71071000	71.10
· Single lever basin mixer 70 with push-open waste set	Chrome	71077000	76.60
· Single lever basin mixer 70 with 2 flow rates without waste set	Chrome	71076000	71.10
· Single lever basin mixer 70 with metal pop-up waste set	Chrome	71170000	87.20



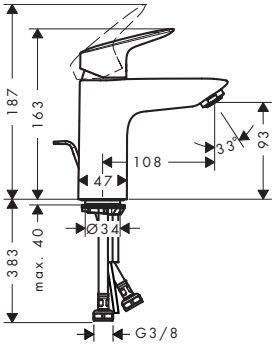

	finish	code no.	Euro
Single lever basin mixer 100 LowFlow with pop-up waste set · consists of: single lever basin mixer, waste set · ComfortZone 100 · projection 108 mm · normal spray · flow rate at 3 bar: 3.5 l/min · ceramic cartridge · temperature limitation adjustable · suitable for continuous flow water heaters · pop-up waste set G 1¼ · material waste set: synthetic · connection dimension: DN15	Chrome	71104000	98.50
Alternative products:			
· Single lever basin mixer 100 with push-open waste set	Chrome	71107000	98.50
· Single lever basin mixer 100 with metal pop-up waste set	Chrome	71171000	109.10

Basin - Focus Care



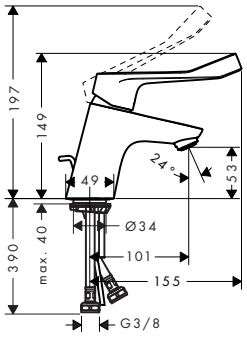

	finish	code no.	Euro
Single lever basin mixer 70 with extra long handle and pop-up waste set · consists of: single lever basin mixer, waste set · ComfortZone 70 · larger print for greater clarity · with extra long barrier-free handle · projection 101 mm · laminar spray · flow rate at 3 bar: 5 l/min · ceramic cartridge · temperature limitation adjustable · suitable for continuous flow water heaters · pop-up waste set G 1¼ · material waste set: metal · connection dimension: DN15	Chrome	31910000	115.60
Alternative products:			
· Single lever basin mixer 70 with extra long handle without waste set	Chrome	31914000	109.70

Measurements within scale drawings are in mm.

Technical specifications and units of measure are subject to change.

		finish	code no.	Euro
	**Single lever basin mixer 100 with extra long handle and pop-up waste set** · consists of: single lever basin mixer, waste set · ComfortZone 100 · larger print for greater clarity · with extra long barrier-free handle · projection 119 mm · laminar spray · flow rate at 3 bar: 5 l/min · ceramic cartridge · temperature limitation adjustable · suitable for continuous flow water heaters · pop-up waste set G 1¼ · material waste set: metal · connection dimension: DN15	Chrome	31911000	141.90
	Alternative products: · Single lever basin mixer 100 with extra long handle without waste set	Chrome	31915000	135.50
	**Single lever basin mixer 100 CoolStart with extra long handle without waste set** · ComfortZone 100 · larger print for greater clarity · with extra long barrier-free handle · projection 119 mm · laminar spray · flow rate at 3 bar: 5 l/min · ceramic cartridge · temperature limitation adjustable · suitable for continuous flow water heaters · connection dimension: DN15 · cold water in middle position	Chrome	31917000	135.50
	**Single lever basin mixer for exposed installation with extra long handle** · larger print for greater clarity · with extra long barrier-free handle · projection 180 mm · centre distance: 150 ± 12 mm · laminar spray · flow rate at 3 bar: 5 l/min · ceramic cartridge · temperature limitation adjustable · with noise reduction · suitable for continuous flow water heaters · connection dimension: DN15	Chrome	31913000	147.70

Measurements within scale drawings are in mm.

Technical specifications and units of measure are subject to change.

Shower - Focus Care

	finish	code no.	Euro
Single lever shower mixer for exposed installation with extra long handle · larger print for greater clarity · with extra long barrier-free handle · 1 outlet · connection type: s-shaped connections · centre distance: 150 ± 12 mm · flow rate at 3 bar: 22 l/min · ceramic cartridge · temperature limitation adjustable · non-return valve · with silencer · hose connection DN15 · connection dimension: DN15	Chrome	31916000	119.10



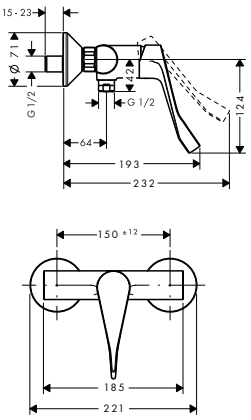

Basin - Novus Care

	finish	code no.	Euro
Single lever basin mixer 70 with extra long handle and pop-up waste set · consists of: single lever basin mixer, waste set · ComfortZone 70 · larger print for greater clarity · with extra long barrier-free handle · projection 107 mm · normal spray · flow rate at 3 bar: 5 l/min · ceramic cartridge · temperature limitation adjustable · suitable for continuous flow water heaters · pop-up waste set G 1¼ · material waste set: metal · connection dimension: DN15	Chrome	71920000	101.40



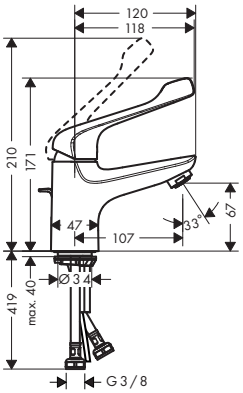

Single lever basin mixer 100 with extra long handle and pop-up waste set · consists of: single lever basin mixer, waste set · ComfortZone 100 · larger print for greater clarity · with extra long barrier-free handle · projection 118 mm · normal spray · flow rate at 3 bar: 5 l/min · ceramic cartridge · temperature limitation adjustable · suitable for continuous flow water heaters · pop-up waste set G 1¼ · material waste set: metal · connection dimension: DN15	Chrome	71921000	123.90



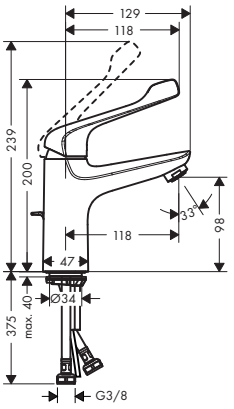

Single lever basin mixer for exposed installation with extra long handle · larger print for greater clarity · with extra long barrier-free handle · projection 192 mm · centre distance: 150 ± 12 mm · normal spray · flow rate at 3 bar: 5 l/min · ceramic cartridge · temperature limitation adjustable · with noise reduction · suitable for continuous flow water heaters · connection dimension: DN15	Chrome	71923000	141.30



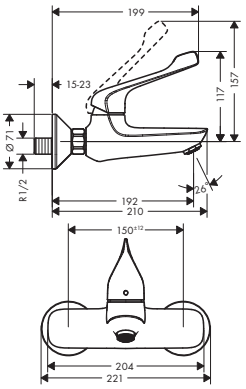

Measurements within scale drawings are in mm.

Technical specifications and units of measure are subject to change.

Shower - Novus Care



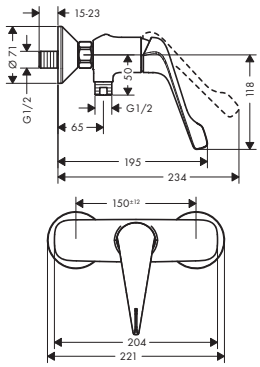

	finish	code no.	Euro
Single lever shower mixer for exposed installation with extra long handle · larger print for greater clarity · with extra long barrier-free handle · 1 outlet · connection type: s-shaped connections · centre distance: 150 ± 12 mm · ceramic cartridge · temperature limitation adjustable · non-return valve · with silencer · hose connection DN15 · connection dimension: DN15	Chrome	71926000	107.50

Unica Comfort shower sets



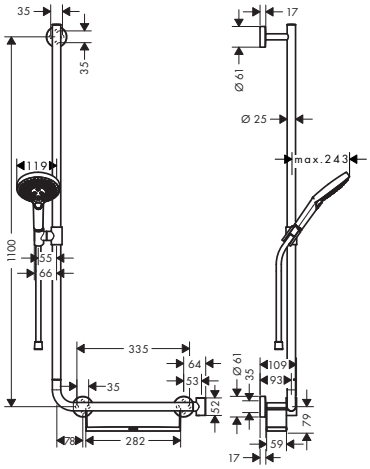

Shower set 120 3jet with shower bar 110 cm left · consists of: hand shower, shower bar, shelf, shower hose, slider · TÜV certified · shower holder can be removed · wallbar could be also used as grab bar · shelf made of plastic, finish white · shelf can be removed for cleaning · spray type: Rain, RainAir, Whirl · convenient diversion via Select button · shower head size: 120 mm · pivot connectors prevent hose from tangling · 90° position adjustable slider, pivots left and right, up and down · fully chrome-plated metal shower slide · maximum flow rate at 0.3 MPa: 15 l/min · bar width: 25 mm · material: solid brass · chrome-plated wall supports of metal	Chrome White/Chrome	26324000 26324400	380.60 380.60
Consisting of: · Hand shower 120 3jet (# 26530XXX) · Shower bar Comfort 110 cm left (# 26403400) · Shower hose 160 cm (# 28276XXX)			
Alternative sizes: · Shower set 120 3jet with shower bar 110 cm right	Chrome White/Chrome	26326000 26326400	380.60 380.60
Water saving EcoSmart version: · Shower set 120 3jet EcoSmart 9 l/min with shower bar 110 cm left	Chrome White/Chrome	26325000 26325400	380.60 380.60
Optional parts: · Foot support Comfort · Wall bar spacer 7 mm	Chrome Chrome	26329000 96380000	141.40 8.20

Measurements within scale drawings are in mm.

Technical specifications and units of measure are subject to change.

	finish	code no.	Euro
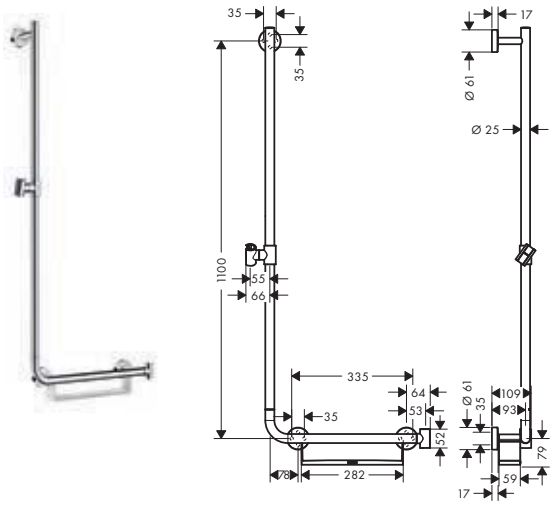			
Shower bar Comfort 110 cm left · consists of: shower bar, shelf, slider · TÜV certified · shower holder can be removed · wallbar could be also used as grab bar · shelf made of plastic, finish white · shelf can be removed for cleaning · 90° position adjustable slider, pivots left and right, up and down · fully chrome-plated metal shower slide · bar width: 25 mm · material: solid brass · chrome-plated wall supports of metal	White/Chrome	26403400	293.60
Alternative products:			
· Shower bar Comfort 110 cm right	White/Chrome	26404400	293.60
Optional parts:			
· Foot support Comfort	Chrome	26329000	141.40
· Wall bar spacer 7 mm	Chrome	96380000	8.20
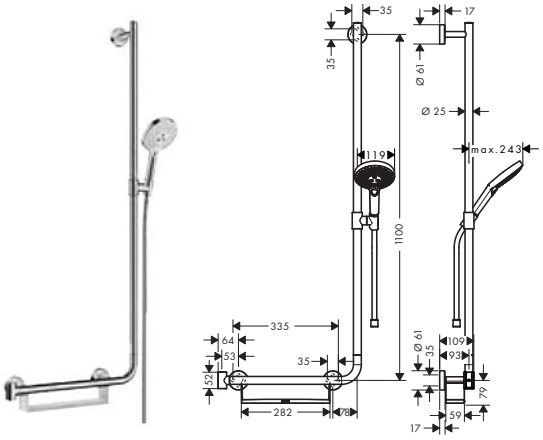			
Shower set 120 3jet with shower bar 110 cm right · consists of: hand shower, shower bar, shelf, shower hose, slider · TÜV certified · shower holder can be removed · wallbar could be also used as grab bar · shelf made of plastic, finish white · shelf can be removed for cleaning · spray type: Rain, RainAir, Whirl · convenient diversion via Select button · shower head size: 120 mm · pivot connectors prevent hose from tangling · 90° position adjustable slider, pivots left and right, up and down · fully chrome-plated metal shower slide · maximum flow rate at 0.3 MPa: 15 l/ min · bar width: 25 mm · material: solid brass · chrome-plated wall supports of metal	Chrome White/Chrome	26326000 26326400	380.60 380.60
Consisting of: · Shower bar Comfort 110 cm right (# 26404400) · Hand shower 120 3jet (# 26530XXX) · Shower hose 160 cm (# 28276XXX)			
Alternative sizes:			
· Shower set 120 3jet with shower bar 110 cm left	Chrome White/Chrome	26324000 26324400	380.60 380.60
Water saving EcoSmart version:			
· Shower set 120 3jet EcoSmart 9 l/ min with shower bar 110 cm right	Chrome White/Chrome	26327000 26327400	380.60 380.60
Optional parts:			
· Foot support Comfort	Chrome	26329000	141.40
· Wall bar spacer 7 mm	Chrome	96380000	8.20

Measurements within scale drawings are in mm.

Technical specifications and units of measure are subject to change.

	finish	code no.	Euro
 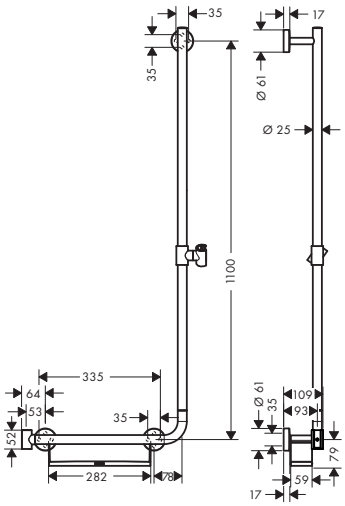			
Shower bar Comfort 110 cm right · consists of: shower bar, shelf, slider · TÜV certified · shower holder can be removed · wallbar could be also used as grab bar · shelf made of plastic, finish white · shelf can be removed for cleaning · 90° position adjustable slider, pivots left and right, up and down · fully chrome-plated metal shower slide · bar width: 25 mm · material: solid brass · chrome-plated wall supports of metal	White/Chrome	26404400	293.60
Alternative products:			
· Shower bar Comfort 110 cm left	White/Chrome	26403400	293.60
Optional parts:			
· Foot support Comfort	Chrome	26329000	141.40
· Wall bar spacer 7 mm	Chrome	96380000	8.20
 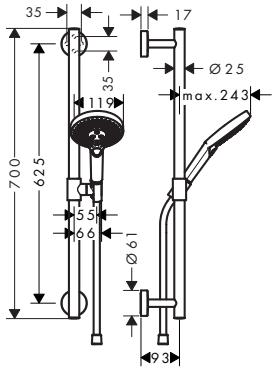			
Shower set 120 3jet with shower bar 65 cm · consists of: hand shower, shower bar, shower hose, slider · TÜV certified · wallbar could be also used as grab bar · spray type: Rain, RainAir, Whirl · convenient diversion via Select button · shower head size: 120 mm · pivot connectors prevent hose from tangling · 90° position adjustable slider, pivots left and right, up and down · fully chrome-plated metal shower slide · maximum flow rate at 0.3 MPa: 15 l/ min · bar width: 25 mm · material: solid brass · chrome-plated wall supports of metal	Chrome White/Chrome	26320000 26320400	261.00 261.00
Consisting of: · Hand shower 120 3jet (# 26530XXX) · Shower bar Comfort 65 cm (# 26401000) · Shower hose 160 cm (# 28276XXX)			
Alternative sizes:			
· Shower set 120 3jet with shower bar 90 cm	Chrome White/Chrome	26322000 26322400	271.90 271.90
· Shower set 120 3jet EcoSmart 9 l/ min with shower bar 90 cm	Chrome White/Chrome	26323000 26323400	271.90 271.90
Water saving EcoSmart version:			
· Shower set 120 3jet EcoSmart 9 l/ min with shower bar 65 cm	Chrome White/Chrome	26321000 26321400	261.00 261.00
Optional parts:			
· Grab handle Comfort with shelf and shower holder	White/Chrome	26328400	130.50
· Foot support Comfort	Chrome	26329000	141.40
· Wall bar spacer 7 mm	Chrome	96380000	8.20

Measurements within scale drawings are in mm.

Technical specifications and units of measure are subject to change.

	finish	code no.	Euro
Shower bar Comfort 90 cm · consists of: shower bar, slider · TÜV certified · wallbar could be also used as grab bar · 90° position adjustable slider, pivots left and right, up and down · fully chrome-plated metal shower slide · bar width: 25 mm · material: solid brass · chrome-plated wall supports of metal	Chrome	26402000	184.80
Alternative sizes: · Shower bar Comfort 65 cm	Chrome	26401000	174.00
Optional parts: · Grab handle Comfort with shelf and shower holder	White/Chrome	26328400	130.50
· Foot support Comfort	Chrome	26329000	141.40
· Wall bar spacer 7 mm	Chrome	96380000	8.20

Unica Comfort grab bar



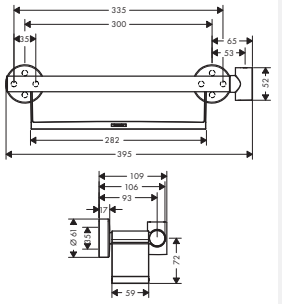

Grab handle Comfort with shelf and shower holder · consists of: grab bar, shelf, shower holder · TÜV certified · shower holder can be installed on both sides · shower holder can be removed · shelf made of plastic, finish white · shelf can be removed for cleaning · fixed holding position · for hoses with conical nut · bar width: 25 mm · brass	White/Chrome	26328400	130.50
Optional parts: · Foot support Comfort	Chrome	26329000	141.40

Unica Comfort foot rest



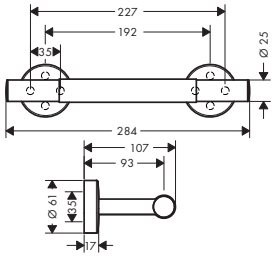

Foot support Comfort · TÜV certified · antislip foot rest · metal	Chrome	26329000	141.40

Thermostatic mixers



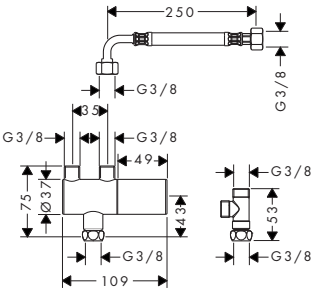

Under-basin thermostat for exposed installation · the thermostat offers the possibility for thermal disinfection · connection dimension: G ⅜	Chrome	15346000	255.90

Measurements within scale drawings are in mm.

Technical specifications and units of measure are subject to change.

	finish	code no.	Euro



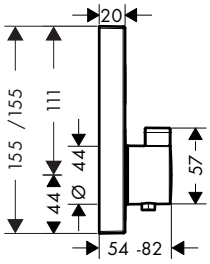

Thermostat for concealed installation for 1 function — Chrome — 15762000 — 530.00

- 1 outlet
- Select push-button on/off control for 1 outlet
- flow rate hand shower connection at 0.3 MPa: 26 l/ min
- thermostat cartridge, Select valve
- min. operating pressure: 1 bar
- max. operating pressure: 10 bar
- safety lock at 40° C
- temperature limitation adjustable
- connection type: basic set
- Thermostat is delivered with button On/Off

Required parts:

- Basic set iBox universal — 01800180 — 130.80

Optional parts:

- Extension element — Chrome — 13593000 — 43.10
- Extension iBox universal basic set 2.5 cm — 13595000 — 46.50



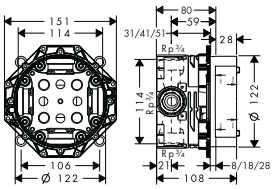

Basic set iBox universal — 01800180 — 130.80

- connection thread Rp ¾
- suitable for all shower, bath tub and thermostat finish sets for concealed installation
- rotationally-symmetric installation
- sound-decoupled installation
- connection dimension: DN20

Alternative products:

- Basic set iBox universal with shut-off unit — 01850180 — 169.90

Optional parts:

- Extension iBox universal basic set 2.5 cm — 13595000 — 46.50
- Fastening rail set for iBox universal — 96615000 — 33.00
- Assembly aid for iBox universal — 93500000 — 12.00

NEW

Hand showers 6 l/ min



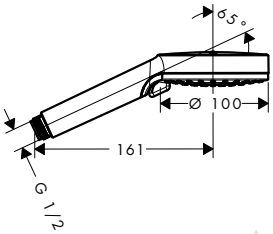

Hand shower Vario Green 6 l/ min — White/Chrome — 26336400 — 21.60

- shower head size: 100 mm
- spray type adjustment by turning spray disc
- spray type: Rain, IntenseRain
- flow rate at 3 bar: 5.7 l/ min
- with internal water conduction
- rinseable dirt filter
- connection thread G ½
- connection dimension: DN15
- suitable for continous flow water heaters

Water saving EcoSmart version:

- Hand shower Vario EcoSmart 9 l/ min — White/Chrome — 26332400 — 21.60



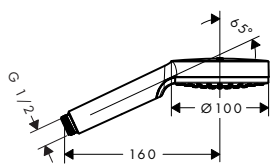

Hand shower 1jet Green 6 l/ min — White/Chrome — 26334400 — 19.50

- shower head size: 100 mm
- spray type: Rain
- flow rate at 3 bar: 5.7 l/ min
- with internal water conduction
- rinseable dirt filter
- connection thread G ½
- connection dimension: DN15
- suitable for continous flow water heaters

Measurements within scale drawings are in mm.

Technical specifications and units of measure are subject to change.

	finish	code no.	Euro
 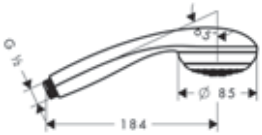	**Hand shower Mono Green 6 l/min** · shower head size: 85 mm · spray type: normal spray · flow rate at 3 bar: 5.7 l/min · with internal water conduction · rinseable dirt filter · connection thread G ½ · connection dimension: DN15	Chrome	28561000	27.30

Bidette

 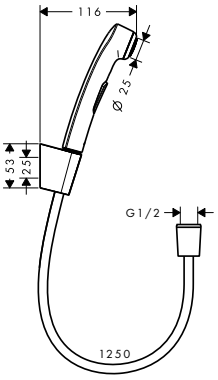	**Bidette hand shower 1jet with shower holder and pressure shower hose 125 cm** · consists of: bidette hand shower, shower holder, shower hose · flow rate hand shower connection at 0.3 MPa: 6.6 l/min · with non-return valve · maximum flow rate at 0.3 MPa: 6 l/min · additional comment: Surface shower hose chrome **Consisting of:** · Shower holder Porter S (# 28331XXX)	Chrome	32129000	79.80
	Alternative sizes: · Bidette hand shower 1jet with shower holder and pressure shower hose 160 cm	Chrome	32128000	81.40

Accessories

 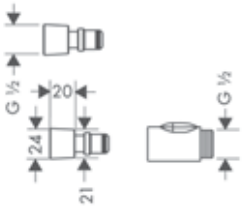	**Quick-coupling set** · material: plastic · removable · connection dimension DN15	Chrome	28346000	22.90

Measurements within scale drawings are in mm.

Technical specifications and units of measure are subject to change.

Accessories



Rainfinity	page 418		Logis	page 418	
Unica Comfort Accessories	page 420		Logis Universal	page 421	
RainScent	page 424				

Rainfinity

		finish	code no.	Euro
NEW  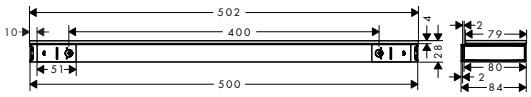	**Shelf 500** · surface of the shelf at color variant -000 = mirror glass, at color variant -700 = graphite color, satined · shelf made of safety glass · material: metal · wall-mounted · length 500 mm	Chrome Matt White	26844000 26844700	250.00 325.00

Logis

		finish	code no.	Euro
 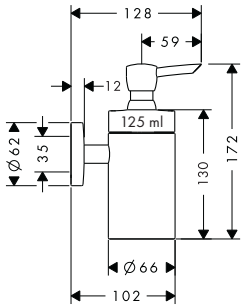	**Liquid soap dispenser** · wall-mounted · material: brass, crystal glass · filling capacity 125 ml · dosage 1.5 ml · material holder: metal	Chrome Brushed Nickel	40514000 40514820	112.80 169.20
 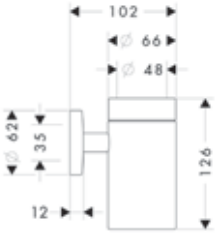	**Toothbrush tumbler** · material: brass, crystal glass · wall-mounted · material holder: metal	Chrome Brushed Nickel	40518000 40518820	70.80 106.20
 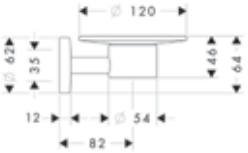	**Soap dish** · material: brass, crystal glass · wall-mounted · material holder: metal	Chrome Brushed Nickel	40515000 40515820	70.80 106.20
 	**Towel hook** · material: brass · wall-mounted · material holder: metal	Chrome Brushed Nickel	40511000 40511820	17.00 25.50
 	**Towel holder twin-handle** · material: brass · wall-mounted · material holder: metal · length 445 mm · swivelling	Chrome Brushed Nickel	40512000 40512820	84.60 126.90

Measurements within scale drawings are in mm.

Technical specifications and units of measure are subject to change.

	finish	code no.	Euro
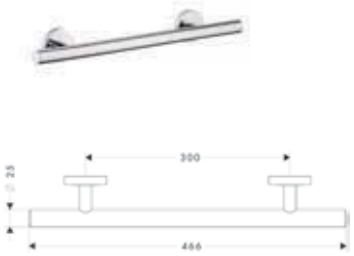	**Grab rail** · drilling distance 300 mm · material: brass · wall-mounted · material holder: metal · length 466 mm · TÜV certified	Chrome Brushed Nickel	40513000 40513820	84.60 126.90
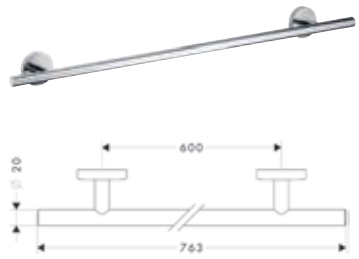	**Bath towel rail** · drilling distance 600 mm · material: brass · wall-mounted · material holder: metal · length 763 mm	Chrome Brushed Nickel	40516000 40516820	98.80 148.20
	**Roll holder with cover** · material: brass · wall-mounted · material holder: metal	Chrome Brushed Nickel	40523000 40523820	70.80 106.20
	**Roll holder without cover** · material: brass · wall-mounted · material holder: metal	Chrome Brushed Nickel	40526000 40526820	56.50 84.80
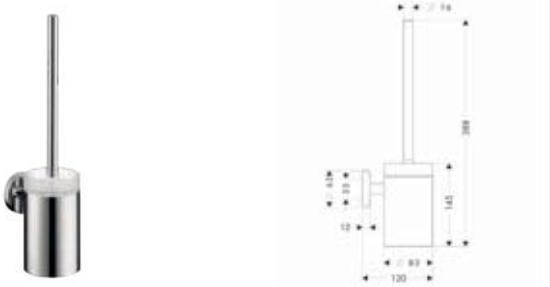	**Toilet brush with tumbler wall-mounted** · material holder: metal · material: brass, crystal glass · wall-mounted **Optional parts:** · Replacement toilet brush without stick · Replacement toilet brush without stick	Chrome Brushed Nickel Black White	40522000 40522820 40068000 40088000	126.90 190.40 16.30 16.30
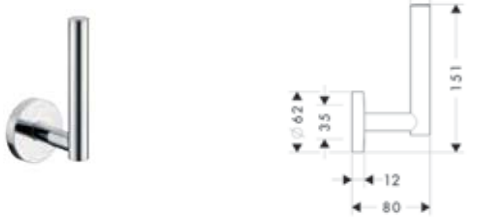	**Spare roll holder** · material: brass · wall-mounted · for spare rolls	Chrome Brushed Nickel	40517000 40517820	56.50 84.80

Measurements within scale drawings are in mm.

Technical specifications and units of measure are subject to change.

	finish	code no.	Euro
 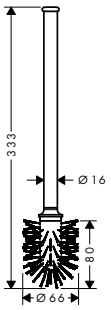	**Replacement toilet brush with handle**	Chrome	40089000	51.10
 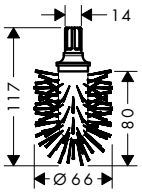	**Replacement toilet brush without stick**	White	40088000	16.30
 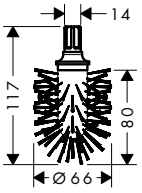	**Replacement toilet brush without stick**	Black	40068000	16.30
Unica Comfort grab bar				
 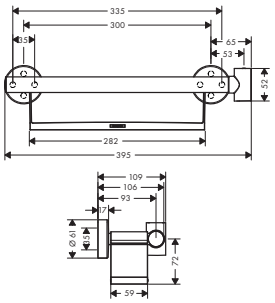	**Grab handle Comfort with shelf and shower holder** · consists of: grab bar, shelf, shower holder · TÜV certified · shower holder can be installed on both sides · shower holder can be removed · shelf made of plastic, finish white · shelf can be removed for cleaning · fixed holding position · for hoses with conical nut · bar width: 25 mm · brass	White/Chrome	26328400	130.50
	Optional parts: · Foot support Comfort	Chrome	26329000	141.40
Unica Comfort foot rest				
 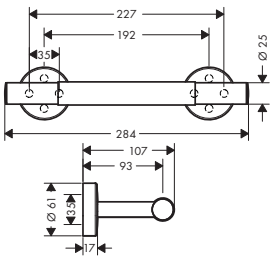	**Foot support Comfort** · TÜV certified · antislip foot rest · metal	Chrome	26329000	141.40

Measurements within scale drawings are in mm.

Technical specifications and units of measure are subject to change.

Logis Universal Accessories

	finish	code no.	Euro
Toothbrush tumbler · material: brass, glass · wall-mounted · material holder: metal	Chrome	41718000	25.60
Liquid soap dispenser · wall-mounted · material: brass, glass · filling capacity 200 ml · dosage 2 ml · material holder: metal	Chrome	41714000	35.80
Soap dish · material: brass, glass · wall-mounted · material holder: metal	Chrome	41715000	25.60
Corner basket · can be used additional as a shelf · material: brass · wall-mounted · material holder: metal	Chrome	41710000	25.60
Grab rail · drilling distance 300 mm · material: brass · wall-mounted · material holder: metal · length 345 mm · TÜV certified	Chrome	41713000	41.00
Bath towel rail · drilling distance 600 mm · material: brass · wall-mounted · material holder: metal · length 644 mm	Chrome	41716000	41.00

Measurements within scale drawings are in mm.

Technical specifications and units of measure are subject to change.

Accessories

		finish	code no.	Euro
	**Towel rack with towel holder** · material holder: metal · material: brass · wall-mounted · length 600 mm	Chrome	41720000	71.70
	**Double bath towel rail** · drilling distance 600 mm · material: brass · wall-mounted · material holder: metal · length 644 mm	Chrome	41712000	51.20
	**Towel ring** · material holder: metal · material: brass · wall-mounted	Chrome	41724000	25.60
	**Towel hook** · material: brass · wall-mounted · material holder: metal	Chrome	41711000	7.70
	**Double towel hook** · material: brass · wall-mounted · material holder: metal	Chrome	41725000	15.40
	**Roll holder with cover** · material: brass · wall-mounted · material holder: metal	Chrome	41723000	35.80

Measurements within scale drawings are in mm.

Technical specifications and units of measure are subject to change.

	finish	code no.	Euro
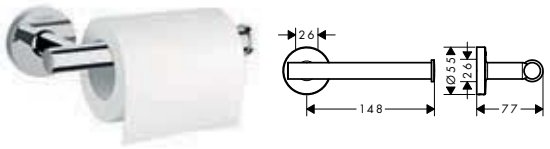			
Roll holder without cover · material: brass · wall-mounted · material holder: metal	Chrome	41726000	25.60
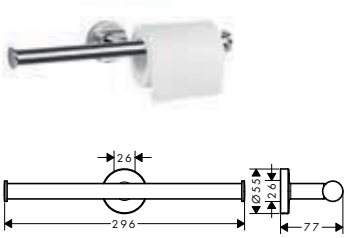			
Spare roll holder · material: brass · wall-mounted · for 2 paper rolls	Chrome	41717000	25.60
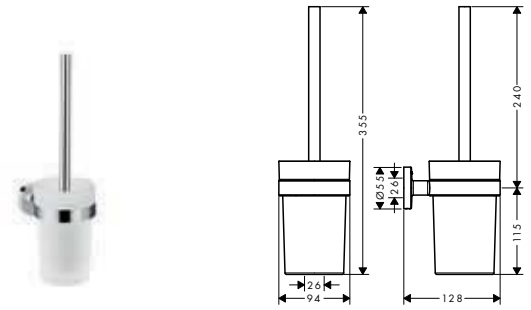			
Toilet brush with tumbler wall-mounted · material holder: metal · material: brass, glass · wall-mounted	Chrome	41722000	35.80
Optional parts: · Replacement toilet brush with handle	Chrome	93286000	26.10
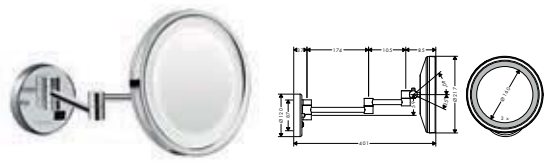			
Shaving mirror with LED light · inclinable · material: metal · illuminant: max. 2 W (21 x 0.08 W / LED) · input voltage: 100 - 240 V AC / 50 / 60 Hz · output voltage: 12 V - DC · wall-mounted · enlargement: 3 x magnification · swivelling · illuminated enlargement mirror	Chrome	73560000	126.00
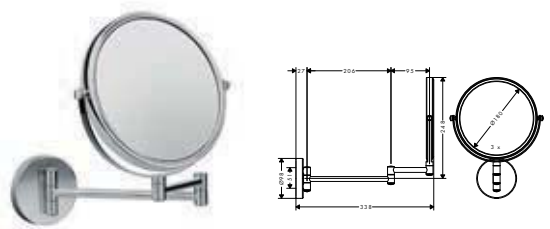			
Shaving mirror · inclinable · material: metal · wall-mounted · enlargement: 3 x magnification · swivelling	Chrome	73561000	61.40
			
Bath-accessory set 5 in 1 · consists of: towel rack with towel holder, roll holder, toilet brush, double towel hook	Chrome	41728000	184.30
Consisting of: · Towel rack with towel holder (# 41720000) · Bath towel rail (# 41716000) · Double towel hook (# 41725000) · Toilet brush with tumbler wall-mounted (# 41722000) · Roll holder with cover (# 41723000)			

Measurements within scale drawings are in mm.

		finish	code no.	Euro
	**Bath-accessory set 3 in 1** · consists of: double bath towel rail, roll holder, toilet brush **Consisting of:** · Double bath towel rail (# 41712000) · Roll holder with cover (# 41723000) · Toilet brush with tumbler wall-mounted (# 41722000)	Chrome	41727000	112.60

RainScent

NEW  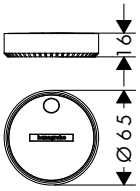		**Starter kit (1 case + 2 shower tabs)** · consists of: Case, 2 Shower tabs rosemary/citrus + lavender · by light pressure on the trough the lid tilts to insert the shower tab · suitable for round shower tabs with a diameter of 35 mm and a thickness of 12 mm · opening and flow slots for entry and exit of water at the bottom · case is dishwasher safe · material: plastic · suitable for shower	Matt White	21140700	14.50
		Optional parts:			
	NEW	· Wellness kit rosemary/citrus (package of 5 shower tabs)		21141000	9.90
	NEW	· Wellness kit lavender (package of 5 shower tabs)		21142000	9.90
	NEW	· Wellness kit pomegranate (package of 5 shower tabs)		21143000	9.90
	NEW	· Wellness kit bergamot (package of 5 shower tabs)		21144000	9.90
	NEW	· Wellness kit silver fir (package of 5 shower tabs)		21145000	9.90
	NEW	· Wellness kit mix (package of 5 shower tabs)		21146000	9.90
NEW 		**Wellness kit rosemary/citrus (package of 5 shower tabs)** · matching scent to the RainTunes scenarios good morning and recreation · vegan · without microplastics · suitable for shower		21141000	9.90
		Required parts:			
	NEW	· Starter kit (1 case + 2 shower tabs)	Matt White	21140700	14.50
NEW 		**Wellness kit lavender (package of 5 shower tabs)** · matching scent to the RainTunes scenarios good night and relaxation · vegan · without microplastics · suitable for shower		21142000	9.90
		Required parts:			
	NEW	· Starter kit (1 case + 2 shower tabs)	Matt White	21140700	14.50

Measurements within scale drawings are in mm.

Technical specifications and units of measure are subject to change.

		finish	code no.	Euro
NEW 	**Wellness kit pomegranate (package of 5 shower tabs)** · matching scent to the RainTunes scenario beauty · vegan · without microplastics · suitable for shower		21143000	9.90
NEW	**Required parts:** · Starter kit (1 case + 2 shower tabs)	Matt White	21140700	14.50
NEW 	**Wellness kit bergamot (package of 5 shower tabs)** · matching scent to the RainTunes scenario vitality · vegan · without microplastics · suitable for shower		21144000	9.90
NEW	**Required parts:** · Starter kit (1 case + 2 shower tabs)	Matt White	21140700	14.50
NEW 	**Wellness kit silver fir (package of 5 shower tabs)** · matching scent to the RainTunes scenario nature · vegan · without microplastics · suitable for shower		21145000	9.90
NEW	**Required parts:** · Starter kit (1 case + 2 shower tabs)	Matt White	21140700	14.50
NEW 	**Wellness kit mix (package of 5 shower tabs)** · consists of: each 1 tab of varieties rosemayr/citrus, lavender, pomegranate, bergamot, silver fir · vegan · without microplastics · suitable for shower		21146000	9.90
NEW	**Required parts:** · Starter kit (1 case + 2 shower tabs)	Matt White	21140700	14.50

Measurements within scale drawings are in mm.

Technical specifications and units of measure are subject to change.

Wastes and overflow



Bath filler with waste and overflow for bath tubs page 428



Waste and overflow for bath tubs page 433



Waste for shower trays page 435



Waste for basin/ bidet page 436



Traps page 436



Accessories page 439



Bath filler with wastes and overflow for bath tubs

	finish	code no.	Euro
 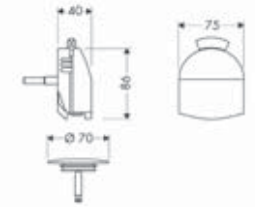			
Exafill Finish set bath filler, waste and overflow set · consists of: cover, security plug · TÜV certified · suitable for standard and special bath tubs · triple aerator · jet former can be adjusted by 20° · flow rate 38 l/min	Chrome	58127000	170.80
Required parts:			
· Exafill Basic set bath filler, waste and overflow set for standard bath tubs		58125180	117.70
· Exafill Basic set bath filler, waste and overflow set for special bath tubs		58126180	165.00
Optional parts:			
· Flexible connection tube 80 cm		58192000	104.50
 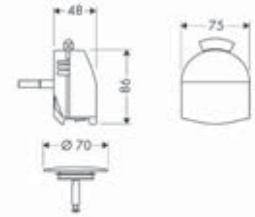			
Exafill Finish set bath filler, waste and overflow set plus · consists of: cover, security plug · TÜV certified · suitable for standard and special bath tubs, bath tubs with recessed overflow opening · triple aerator · jet former can be adjusted by 20° · flow rate 38 l/min	Chrome	58128000	202.60
Required parts:			
· Exafill Basic set bath filler, waste and overflow set for standard bath tubs		58125180	117.70
· Exafill Basic set bath filler, waste and overflow set for special bath tubs		58126180	165.00
Optional parts:			
· Flexible connection tube 80 cm		58192000	104.50
 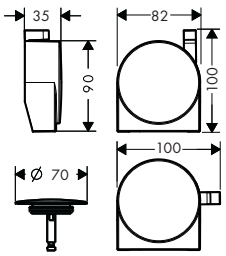			
Exafill S Finish set bath filler, waste and overflow set · consists of: cover, security plug · TÜV certified · suitable for standard and special bath tubs · wide flood jet · jet former can be adjusted by 30° · flow rate 30 l/min	Chrome	58117000	156.90
	NEW Brushed Bronze*	58117140	235.00
	NEW Brushed Black Chrome*	58117340	235.00
	NEW Matt Black*	58117670	220.00
	NEW Matt White*	58117700	220.00
	Brushed Nickel	58117820	235.40
	NEW Polished Gold Optic*	58117990	235.00
			Quick Clean
			***available from November 2019**
Required parts:			
· Exafill S Basic set bath filler, waste and overflow set for standard bath tubs		58115180	108.10
· Exafill S Basic set bath filler, waste and overflow set for special bath tubs		58116180	151.60
Optional parts:			
· Flexible connection tube 80 cm		58192000	104.50
 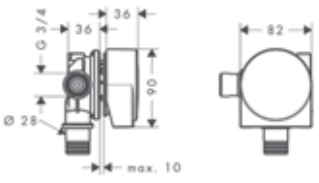			
Exafill Finish set bath filler · flow rate 26 l/min · overflow height adjustable by 25 mm	Chrome	58112000	82.20
Required parts:			
· Waste set push-open for bath tubs	Chrome	50107000	55.30
Optional parts:			
· Bath tub trap		56373000	12.40

Measurements within scale drawings are in mm.

Technical specifications and units of measure are subject to change.

	finish	code no.	Euro
 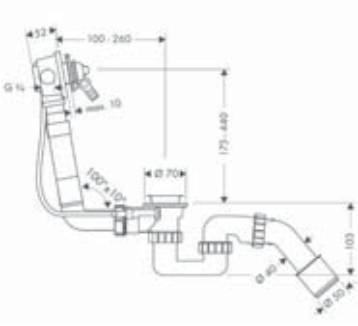	**Exafill Basic set bath filler, waste and overflow set for standard bath tubs** · consists of: basic set, bath tub trap · suitable for standard bath tubs · bowden cable length 520 mm · supply hose water connection left and right DN20		58125180	117.70
	Consisting of: · Bath tub trap (# 56373000)			
	Required parts:			
	· Exafill Finish set bath filler, waste and overflow set	Chrome	58127000	170.80
	· Exafill Finish set bath filler, waste and overflow set plus	Chrome	58128000	202.60
	Optional parts:			
	· Flexible connection tube 80 cm		58192000	104.50
 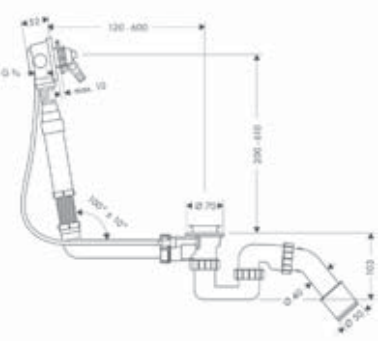	**Exafill Basic set bath filler, waste and overflow set for special bath tubs** · consists of: basic set, bath tub trap · suitable for special bath tubs, with bellows for bath tubs with slanted bath rim · bowden cable length 780 mm · supply hose water connection left and right DN20		58126180	165.00
	Consisting of: · Bath tub trap (# 56373000)			
	Required parts:			
	· Exafill Finish set bath filler, waste and overflow set	Chrome	58127000	170.80
	· Exafill Finish set bath filler, waste and overflow set plus	Chrome	58128000	202.60
	Optional parts:			
	· Flexible connection tube 80 cm		58192000	104.50
 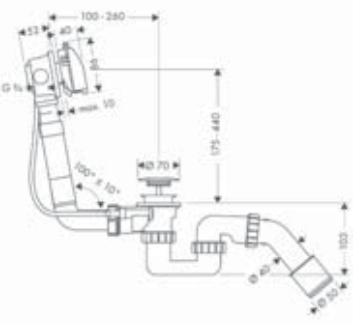	**Exafill Complete set bath filler, waste and overflow set for standard bath tubs** · consists of: bath tub trap, basic set, finish set · TÜV certified · suitable for standard bath tubs · bowden cable length 520 mm · supply hose water connection left and right DN20	Chrome	58123000	264.20
	Consisting of: · Exafill Basic set bath filler, waste and overflow set for standard bath tubs (# 58125180) · Exafill Finish set bath filler, waste and overflow set (# 58127000) · Bath tub trap (# 56373000)			
	Optional parts:			
	· Flexible connection tube 80 cm		58192000	104.50

Measurements within scale drawings are in mm.

Technical specifications and units of measure are subject to change.

	finish	code no.	Euro
	**Exafill S Basic set bath filler, waste and overflow set for standard bath tubs** · consists of: basic set, bath tub trap · suitable for standard bath tubs, with bellows for bath tubs with slanted bath rim · bowden cable length 520 mm · supply hose water connection left DN20	58115180	108.10
	Consisting of: · Bath tub trap (# 56373000)		
	Alternative products: · Exafill S Basic set bath filler, waste and overflow set for special bath tubs	58116180	151.60
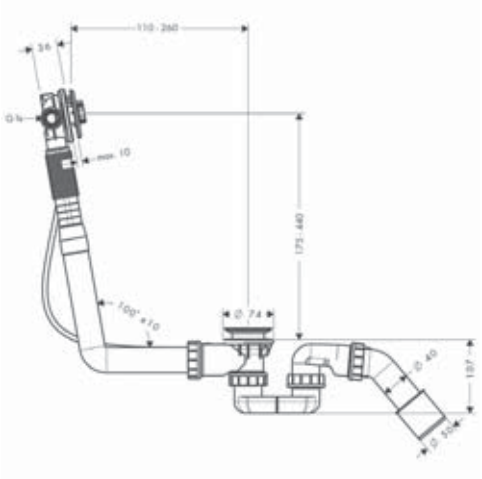	**Required parts:** · Exafill S Finish set bath filler, waste and overflow set	Chrome	58117000	156.90
		NEW Brushed Bronze	58117140	235.00
		NEW Brushed Black Chrome	58117340	235.00
		NEW Matt Black	58117670	220.00
		NEW Matt White	58117700	220.00
		Brushed Nickel	58117820	235.40
		NEW Polished Gold Optic	58117990	235.00
	Optional parts: · Flexible connection tube 80 cm	58192000	104.50
	**Exafill S Basic set bath filler, waste and overflow set for special bath tubs** · consists of: basic set, bath tub trap · suitable for special bath tubs, with bellows for bath tubs with slanted bath rim · bowden cable length 780 mm · supply hose water connection left DN20	58116180	151.60
	Consisting of: · Bath tub trap (# 56373000)		
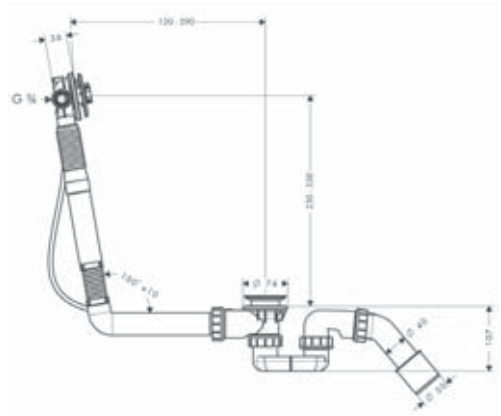	**Required parts:** · Exafill S Finish set bath filler, waste and overflow set	Chrome	58117000	156.90
		NEW Brushed Bronze	58117140	235.00
		NEW Brushed Black Chrome	58117340	235.00
		NEW Matt Black	58117670	220.00
		NEW Matt White	58117700	220.00
		Brushed Nickel	58117820	235.40
		NEW Polished Gold Optic	58117990	235.00
	Optional parts: · Flexible connection tube 80 cm	58192000	104.50

Measurements within scale drawings are in mm.

Technical specifications and units of measure are subject to change.

	finish	code no.	Euro
 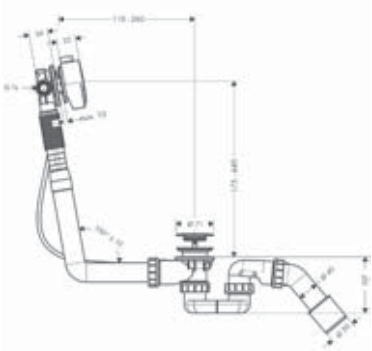	**Exafill S Complete set bath filler, waste and overflow set for standard bath tubs** · consists of: bath tub trap, basic set, finish set · TÜV certified · suitable for standard bath tubs, with bellows for bath tubs with slanted bath rim · bowden cable length 520 mm · supply hose water connection left DN20	Chrome	58113000	237.80
	Consisting of: · Bath tub trap (# 56373000) · Exafill S Basic set bath filler, waste and overflow set for standard bath tubs (# 58115180) · Exafill S Finish set bath filler, waste and overflow set (# 58117XXX)			
	Optional parts: · Flexible connection tube 80 cm		58192000	104.50
	**Flexible connection tube 80 cm** · length 800 mm · version: 90° angle		58192000	104.50
NEW  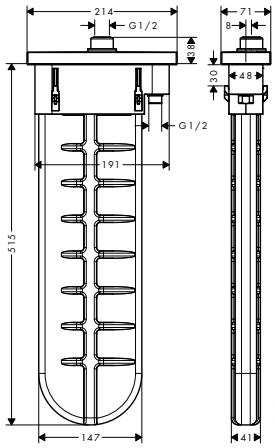	**sBox Finish set square** · consists of: hose box, shower hose, escutcheon · sBox for quiet, smooth and protected hose guidance · 1 outlet · flow rate at 3 bar: 9.5 l/ min · suitable for rim or tile mounted installation · bath rim width at least 100 mm · clamping range: 0 - 30 mm · connection dimension: DN15 · maximum pull-out length of hand shower 1.45 m · protected against backflow for domestic use (according to DIN EN1717)	Chrome Brushed Bronze Brushed Black Chrome Matt Black Matt White Polished Gold Optic	28010000 28010140 28010340 28010670 28010700 28010990	290.00 435.00 435.00 406.00 406.00 435.00
NEW	**Alternative products:** · sBox Finish set oval	Chrome	28020000	290.00
NEW	**Required parts:** · sBox Rim and tile mounted bath basic set		13560180	50.00
NEW	**Optional parts:** · sBox Installation plate for tile mounted installation		28016000	60.00
NEW	· sBox Mounting angle for installation plate for tile mounted installation		28021000	150.00
	· Rim mounted adapter 25°	Chrome	28071000	26.10

Measurements within scale drawings are in mm.

Technical specifications and units of measure are subject to change.

	finish	code no.	Euro
sBox Finish set oval · consists of: hose box, shower hose, escutcheon · sBox for quiet, smooth and protected hose guidance · 1 outlet · flow rate at 3 bar: 9.5 l/min · suitable for rim or tile mounted installation · bath rim width at least 100 mm · clamping range: 0 - 30 mm · connection dimension: DN15 · maximum pull-out length of hand shower 1.45 m · protected against backflow for domestic use (according to DIN EN1717)	Chrome	28020000	290.00
Alternative products:			
NEW · sBox Finish set square	Chrome	28010000	290.00
	Brushed Bronze	28010140	435.00
	Brushed Black	28010340	435.00
	Chrome Matt Black	28010670	406.00
	Matt White	28010700	406.00
	Polished Gold Optic	28010990	435.00
Required parts:			
NEW · sBox Rim and tile mounted bath basic set		13560180	50.00
Optional parts:			
NEW · sBox Installation plate for tile mounted installation		28016000	60.00
NEW · sBox Mounting angle for installation plate for tile mounted installation		28021000	150.00
· Rim mounted adapter 25°	Chrome	28071000	26.10



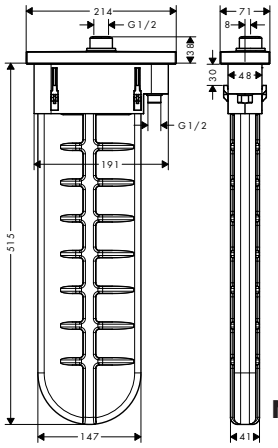

sBox Rim and tile mounted bath basic set · 1 outlet · connection thread R ½ · connection hose length: 600 mm · suitable for rim or tile mounted installation · bath rim width at least 100 mm · drilling diameter on bath tub: two drilled holes Ø 50/51 mm and connection by sawing out required · clamping range: 0 - 30 mm · connection dimension: DN15		13560180	50.00
Optional parts:			
NEW · sBox Installation plate for tile mounted installation		28016000	60.00
NEW · sBox Mounting angle for installation plate for tile mounted installation		28021000	150.00



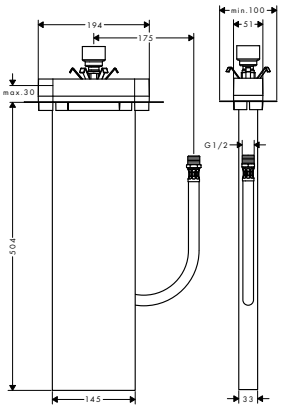

sBox Installation plate for tile mounted installation · dimension: 350 x 120 mm		28016000	60.00



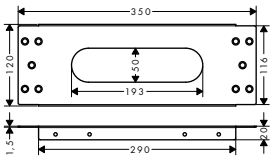

Measurements within scale drawings are in mm.

Technical specifications and units of measure are subject to change.

	finish	code no.	Euro
sBox Mounting angle for installation plate for tile mounted installation · minimum mounting height: 400 mm · maximum mounting height: 750 mm		28021000	150.00

Wastes and overflow for bath tubs



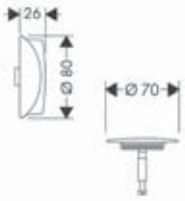

		finish	code no.	Euro
Flexaplus Finish set waste and overflow set · consists of: turning handle, security plug · suitable for standard and special bath tubs · TÜV certified		Chrome	58185000	21.20
	NEW	Brushed Bronz	58185140	32.00
	NEW	Brushed Black Chrome	58185340	32.00
	NEW	Matt Black	58185670	30.00
	NEW	Matt White	58185700	30.00
	NEW	Polished Gold Optic	58185990	32.00
Required parts:				
· Flexaplus Basic set waste and overflow set for standard bath tubs			58140180	47.10
· Flexaplus Basic set waste and overflow set for special bath tubs			58141180	72.70



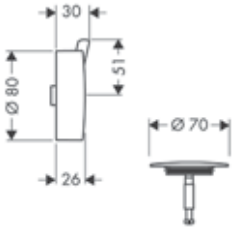

	finish	code no.	Euro
Flexaplus S Finish set waste and overflow set · consists of: turning handle, security plug · suitable for standard and special bath tubs	Chrome	58186000	32.50
	Brushed Nickel	58186820	48.80
Required parts:			
· Flexaplus Basic set waste and overflow set for standard bath tubs		58140180	47.10
· Flexaplus Basic set waste and overflow set for special bath tubs		58141180	72.70



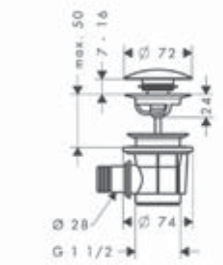

	finish	code no.	Euro
Waste set push-open for bath tubs	Chrome	50107000	55.30
Required parts:			
· Exafill Finish set bath filler	Chrome	58112000	82.20
Optional parts:			
· Bath tub trap		56373000	12.40

Measurements within scale drawings are in mm.

Technical specifications and units of measure are subject to change.

	finish	code no.	Euro
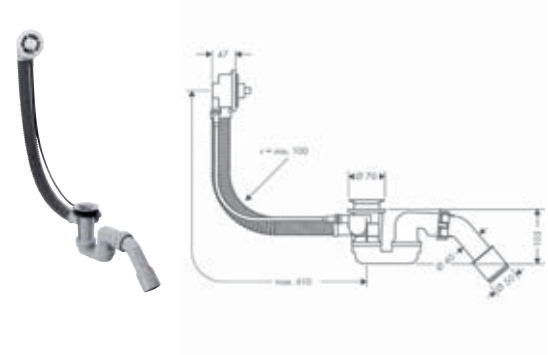			
Flexaplus Basic set waste and overflow set for standard bath tubs · suitable for standard bath tubs · PE screw connection G 1½ x 40/ 50 mm · flexible overflow hose · bowden cable length 520 mm		58140180	47.10
Required parts:			
· Flexaplus Finish set waste and overflow set	Chrome	58185000	21.20
	NEW Brushed Bronze	58185140	32.00
	NEW Brushed Black Chrome	58185340	32.00
	NEW Matt Black	58185670	30.00
	NEW Matt White	58185700	30.00
	NEW Polished Gold Optic	58185990	32.00
· Flexaplus S Finish set waste and overflow set	Chrome	58186000	32.50
	Brushed Nickel	58186820	48.80
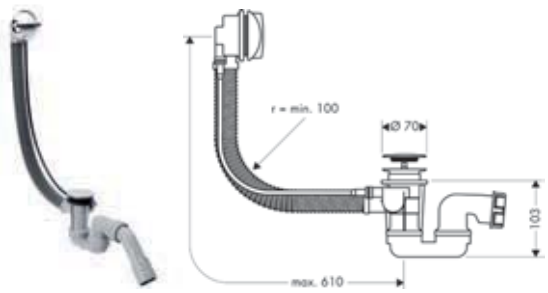			
Flexaplus Basic set waste and overflow set for standard bath tubs and shower trays · suitable for standard bath tubs · PE screw connection G 1½ x 40/ 50 mm · flexible overflow hose · bowden cable length 520 mm	Chrome	58142000	67.00
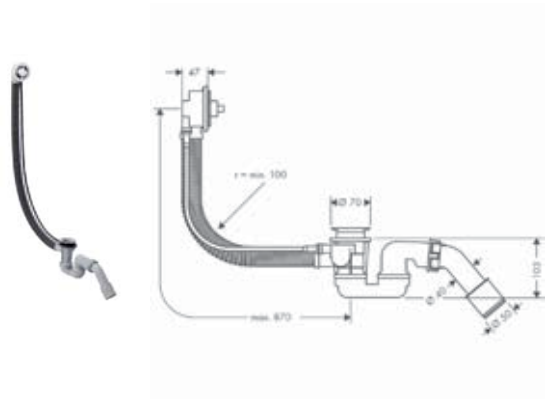			
Flexaplus Basic set waste and overflow set for special bath tubs · suitable for special bath tubs · PE screw connection G 1½ x 40/ 50 mm · flexible overflow hose · bowden cable length 780 mm		58141180	72.70
Required parts:			
· Flexaplus Finish set waste and overflow set	Chrome	58185000	21.20
	NEW Brushed Bronze	58185140	32.00
	NEW Brushed Black Chrome	58185340	32.00
	NEW Matt Black	58185670	30.00
	NEW Matt White	58185700	30.00
	NEW Polished Gold Optic	58185990	32.00
· Flexaplus S Finish set waste and overflow set	Chrome	58186000	32.50
	Brushed Nickel	58186820	48.80
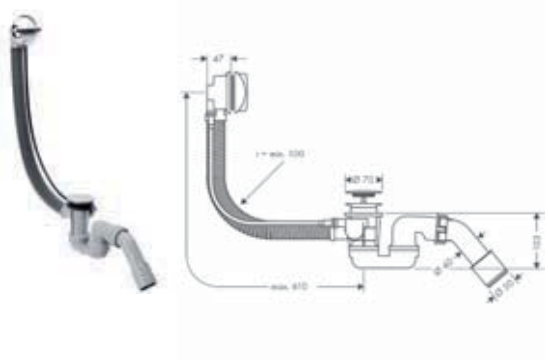			
Flexaplus Complete set waste and overflow set for standard bath tubs · consists of: basic set, finish set · TÜV certified · suitable for standard bath tubs · PE screw connection G 1½ x 40/ 50 mm · flexible overflow hose · bowden cable length 520 mm	Chrome	58143000	67.00
Consisting of: · Flexaplus Basic set waste and overflow set for standard bath tubs (# 58140180) · Flexaplus Finish set waste and overflow set (# 58185XXX)			

Measurements within scale drawings are in mm.

Technical specifications and units of measure are subject to change.

	finish	code no.	Euro
 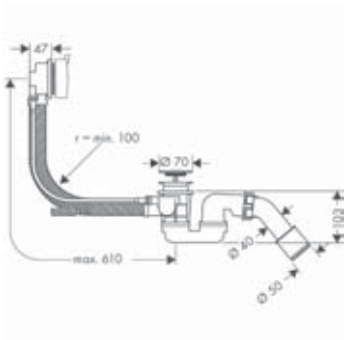 **Flexaplus S Complete set waste and overflow set for standard bath tubs** · consists of: basic set, finish set · TÜV certified · suitable for standard bath tubs · PE screw connection G 1½ x 40/ 50 mm · flexible overflow hose · bowden cable length 520 mm **Consisting of:** · Flexaplus Basic set waste and overflow set for standard bath tubs (# 58140180) · Flexaplus S Finish set waste and overflow set (# 58186XXX)	Chrome	58150000	79.00

Wastes for shower trays

 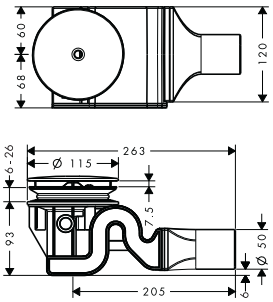 **Raindrain Complete set waste set 90 XXL** · suitable for shower trays with Ø 90 mm waste outlet · drain performance 51 l/ min at 15 mm water level · waste pipe Ø 50 mm · stainless steel finish set · opening for cleaning	Chrome	60067000	68.10
 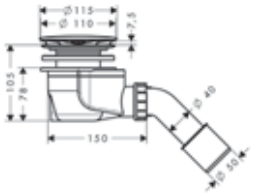 **Staro Complete set waste set 90** · consists of: basic set, finish set · suitable for shower trays with Ø 90 mm waste outlet · drain performance 29 l/ min at 15 mm water level · PE screw connection 40/ 50 mm · waste pipe Ø 50 mm · stainless steel finish set · self-cleaning	Chrome	60056000	55.70
 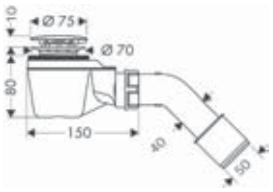 **Staro Complete set waste set 52** · consists of: basic set, finish set · suitable for shower trays with Ø 52 mm waste outlet · drain performance 33 l/ min at 120 mm water level · PE screw connection 40/ 50 mm · waste pipe Ø 50 mm · stainless steel finish set · self-cleaning	Chrome	60060000	31.30
 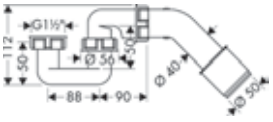 **Bath tub trap** · PE screw connection G 1½ x 40/ 50 mm		56373000	12.40

Measurements within scale drawings are in mm.

Wastes for basin/ bidet



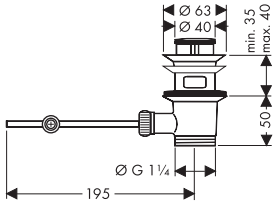

Waste set pop-up for basin and bidet mixers
· operation via pull-rod
· for basins with overflow hole
· brass
· drain plug material brass
· connection dimension G 1¼

	finish	code no.	Euro
	Chrome	94139000	60.70



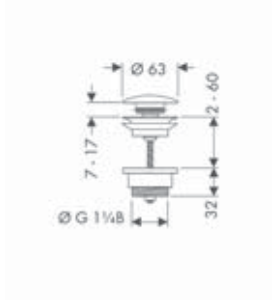

Waste set push-open for basin and bidet mixers
· operation with pressure plug
· for basins with overflow hole
· brass
· drain plug material brass
· connection dimension G 1¼

	finish	code no.	Euro
	Chrome	50100000	56.10
NEW	Brushed Bronze*	50100140	84.20
NEW	Brushed Black Chrome*	50100340	84.20
NEW	Matt Black*	50100670	78.50
NEW	Matt White*	50100700	78.50
NEW	Polished Gold Optic*	50100990	84.20

***available from April 2020**



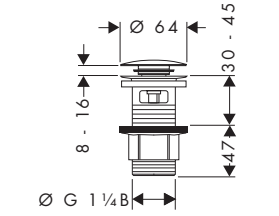

Waste set push-open for basin and bidet mixers
· operation with pressure plug
· for basins with overflow hole
· glass fibre reinforced plastic
· drain plug material stainless steel
· connection dimension G 1¼

	finish	code no.	Euro
	Chrome	50105000	23.90



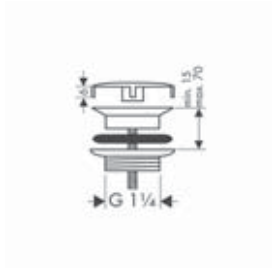

Waste set non-closing for washbasins
· non-closing valve
· for washbasins without overflow
· brass
· drain plug material stainless steel
· connection dimension G 1¼

	finish	code no.	Euro
	Chrome	50001000	36.00

Traps



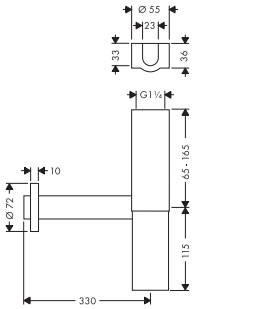

Design trap Flowstar
· adjustment distance 65 - 165 mm
· distance to wall 330 mm
· connection dimension outlet G 1¼

	finish	code no.	Euro
	Chrome	52100000	130.80



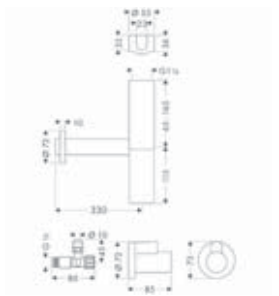

Design trap Flowstar set
· consists of: design trap, angle valve, cover
· adjustment distance 65 - 165 mm
· distance to wall 330 mm
· connection dimension outlet G 1¼

Consisting of:
· Design trap Flowstar (# 52100000)
· Angle valve with cover outlet G 3/8 (# 13954XXX)
· Cover (# 13950XXX)

	finish	code no.	Euro
	Chrome	52120000	187.30

Measurements within scale drawings are in mm.

Technical specifications and units of measure are subject to change.

	finish	code no.	Euro
Design trap Flowstar S · adjustment distance 60 - 165 mm · distance to wall 330 mm · connection dimension outlet G 1¼	Chrome	52105000	73.40
	NEW Brushed Bronze	52105140	110.00
	NEW Brushed Black Chrome	52105340	110.00
	NEW Matt Black	52105670	103.00
	NEW Matt White	52105700	103.00
	NEW Polished Gold Optic	52105990	110.00
Cover · for angle valve · packaging unit: 1 piece	Chrome	13950000	31.10
	NEW Brushed Bronze*	13950140	46.70
	NEW Matt Black*	13950670	44.00
	NEW Matt White*	13950700	44.00
	NEW Polished Gold Optic*	13950990	46.70
Angle valve with cover outlet G 3/8 · self-sealing connection thread · connection dimension wall G ½ · connection dimension outlet G ⅜ · packaging unit: 1 piece	Chrome	13954000	50.40
	Brushed Nickel	13954820	75.60
Angle valve with microfilter outlet G 3/8 · for protection of mixers against dirt inlet, e.g. for electronic basin mixers · filter element can be removed and cleaned · connection dimension wall G ½ · connection dimension outlet G ⅜ · packaging unit: 1 piece	Chrome	13904000	27.70
Angle valve E outlet G 3/8 · connection dimension wall G ½ · connection dimension outlet G ⅜ · main material: brass · material handle and escutcheon: plastic · packaging unit: 1 piece	Chrome	13902000	13.30
Angle valve E outlet G 1/2 · connection dimension wall G ½ · connection dimension outlet G ½ · main material: brass · material handle and escutcheon: plastic · packaging unit: 1 piece	Chrome	13903000	14.40

***available from April 2020**

Measurements within scale drawings are in mm.

Technical specifications and units of measure are subject to change.

		finish	code no.	Euro
	**Angle valve S outlet G 3/8** · connection dimension wall G ½ · connection dimension outlet G ⅜ · main material: brass · material handle and escutcheon: plastic · packaging unit: 1 piece	Chrome	13901000	15.50
	**Cup-shaped trap standard model** · adjustment distance 35 - 95 mm · distance to wall 225 mm · connection dimension outlet G 1¼	Chrome	52053000	23.50
	**Cup-shaped trap easy to install** · adjustment distance 35 - 140 mm · distance to wall 285 mm · connection dimension outlet G 1¼	Chrome	52010000	33.00
	**Cup-shaped trap standard model for bidet** · adjustment distance 35 - 95 mm · distance to wall 220 mm · connection dimension outlet G 1¼	Chrome	55213000	30.30
	**Pipe trap standard model** · adjustment distance 35 - 85 mm · distance to wall 250 mm · connection dimension outlet G 1¼	Chrome	53002000	18.20
	**Pipe trap easy to install** · adjustment distance 30 - 120 mm · distance to wall 300 mm · connection dimension outlet G 1¼	Chrome	53010000	23.80

Measurements within scale drawings are in mm.

Technical specifications and units of measure are subject to change.

	finish	code no.	Euro
Pipe trap standard model for bidet · adjustment distance 30 - 55 mm · distance to wall 275 mm · connection dimension outlet G 1¼	Chrome	55237000	24.20



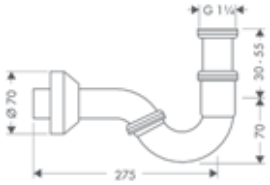

Accessories

Curved pipe 30 cm · length 300 mm · with edge · material: brass · connection dimension G 1¼	Chrome	53555000	22.30





Straight pipe 50 cm · length 500 mm · without edge · material: brass · connection dimension G 1¼	Chrome	53493000	21.80





Straight pipe 30 cm · length 300 mm · with edge · material: brass · connection dimension G 1¼	Chrome	53428000	12.20



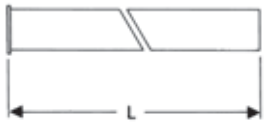

Angle pipe 90° · without edge · material: brass · connection dimension G 1¼	Chrome	53646000	47.50



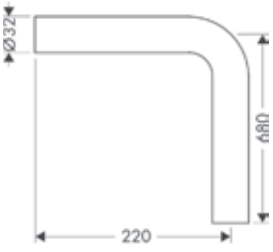

Extension pipe 12.5 cm · length 125 mm · material: brass · connection dimension G 1¼	Chrome	53990000	20.80





Measurements within scale drawings are in mm.

Technical specifications and units of measure are subject to change.

	finish	code no.	Euro
Wall flange · material: brass · connection dimension DN15 · packaging unit: 100 pieces	Chrome	06010000	2.40



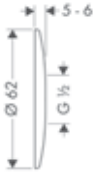

Measurements within scale drawings are in mm.

Technical specifications and units of measure are subject to change.

Kitchen mixers and sinks



Aquno Select M81	page 445		Metris Select M71	page 446	
Metris M71	page 453		Talis Select M51	page 456	
Talis M51	page 459		Talis M52	page 462	
Talis M54	page 466		Focus M41	page 468	
Focus M42	page 471		Logis M31	page 475	
Logis M32	page 477		Sink combis	page 478	
Built-in sinks	page 504		Undermount sinks	page 518	

Selected kitchen taps at a glance

		Logis M31	Focus M42		
					
Versions	Standard (with sBox)			71829, -000, -800	71820, -000, -800 71821, -000, -800
	Standard (without sBox)	71835, -000 71280, 000 71832, 000 71830, 000	71806, -000, -800 71808, -000, -800	71802, -000, -800 71814, -000, -800	71800, -000, -800 71801, -000, -800
	For window installation	71833, -000	71807, -000		
	For LowPressure / vented hot water cylinders	71831, -000	71804, -000		
	With shut-off valve	71834, -000	71813, -000	71803, -000	
	CoolStart	71839, -000 71837, -000	71805, -000 EcoSmart 71809, -000 EcoSmart		
NEW	Eco	71860, -000 71861, -000	71864, -000 CoolStart 71866, -000 CoolStart	71865, -000	71862, -000
	Wall mounting	71836, -000			
Features	Select				
	Change spray type				■
	With pull-out function			■	■
	With swivel spout	■	■	■	■

		Talis M52			
					
Versions	Standard (with sBox)		73860, -000, -800		73864, -000, -800
	Standard (without sBox)	32851, -000	32841, -000	14870, -000	14872, -000
	For window installation				
	For LowPressure / vented hot water cylinders		32842, -000 73861, -000 sBox		
	With shut-off valve			14875, -000	
	CoolStart				
NEW	Eco	32857, -000	32845, -000 73869, -000 sBox		72832, -000 73878, -000 sBox
	Wall mounting				
Features	Select				
	Change spray type		■		
	With pull-out function		■		■
	With swivel spout	■	■	■	■

■ Available

Focus M41		Talis M54		
				
	73880, -000, -800	72801, -000, -670, -800		72803, -000, -670, -800 72809, -000, -670, -800
31820, -000, -670, -800 31817, -000, -670, -800 31806, -000, -800 31780, -000	31815, -000, -670, -800	72800, -000, -670, -800	72804, -000, -670, -800 72806, -000, -670, -800	72802, -000, -670, -800 72808, -000, -670, -800 72840, -000, -670, -800
31822, -000 31804, -000 31784, -000				
31803, -000 31823, -000				
31816, -000				
31821, -000, -800 31826, -000 31827, -000	31833, -000 73895, -000 sBox	72842, -000, -670 72843, -000, -670	72844, -000, -670	72845, -000, -670
31825, -000				
	■	■		
	■	■		■
■	■	■	■	■

Talis M52	Talis M51		Talis Select M51		
					
73863, -000, -800		73850, -000, -800 73851, -000, -800		73852, -000, -800 73853, -000, -800	73867, -000, -800 73868, -000, -800
14877, -000	72810, -000, -800 72814, -000, -800	72813, -000, -800 72815, -000, -800	72820, -000, -800	72821, -000, -800 72822, -000, -800	72823, -000, -800 72824, -000, -800
	72812, -000				
	72811, -000				
72831, -000 73879, -000 sBox	72816, -000		72825, -000	72826, -000	
			■	■	■
■		■			■
■		■		■	■
■	■	■	■	■	■

Price

Selected kitchen taps at a glance

		Metris M71			Metris Select M71		
							
Versions	Standard (with sBox)		73812, -000, -800	73800, -000, -800 73801, -000, -800		73802, -000, -800 73803, -000, -800	73816, -000, 800 73817, -000
	Standard (without sBox)	14822, -000, -800	14821, -000, -800	14820, -000, -800 14834, -000, -800	14883, -000, -800 14847, -000, -800	14884, -000, -800 14857, -000, -800 73820, -000, -800 73822, -000, -800	
	For window installation	14823, -000					
	For LowPressure / vented hot water cylinders						
	With shut-off valve	14888, -000					
	CoolStart						
NEW	Eco	14782, -000	14781, -000 73828, -000 sBox	14780, -000 73823, -000 sBox 73824, -000 sBox	14785, -000	14786, -000 73807, -000 sBox	
	Wall mounting						
Features	Select				■	■	■
	Change spray type			■			■
	With pull-out function		■	■		■	■
	With swivel spout	■	■	■	■	■	■

		Metris Select M71			Aquno Select M81	
						
Versions	Standard (with sBox)	73804, -000, -800	73818, -000, -340, -670, -800	73805, -000, -800 73806, -000, -800	73830, -000, -800	73831, -000, -800
	Standard (without sBox)		73819, -000, -800		73836, -000, -800	73837, -000, -800
	For window installation					
	For LowPressure / vented hot water cylinders					
	With shut-off valve					
	CoolStart					
NEW	Eco	73825, -000		73826, -000 73827, -000		
	Wall mounting					
Features	Select	■	■	■	■	■
	Change spray type		■	■		■
	With pull-out function	■	■	■	■	■
	With swivel spout	■	■	■	■	■

■ Available

Price

Aquno Select M81

		finish	code no.	Euro
NEW	 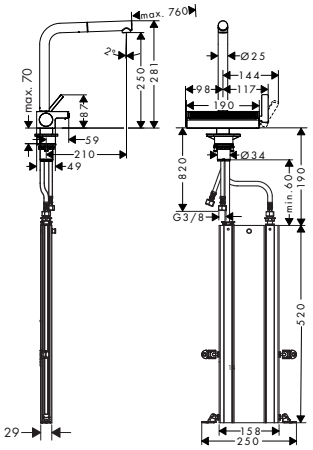	**Aquno Select M81 Single lever kitchen mixer 250, pull-out spout, 2jet, sBox** · consists of: single lever kitchen mixer, hose box, multifunctional colander · ComfortZone 250 · swivel range adjustable in 4 steps 60°, 110°, 150° or 360 · laminar spray, SatinFlow · MagFit magnetic shower support · quick connect shower hose · connection dimension: DN15 · ceramic cartridge · connection type: G ⅜ connections · integrated non-return valve · not suitable for continuous flow water heaters · sBox for quiet, smooth and protected hose guidance in the cabinet, under the countertop, with extension length up to 76 cm · tap hole with Ø 35 mm required · additional comment: change between wide spray and pull-out spout at the touch of a button	Chrome Stainless Steel Finish	73830000 73830800	600.00 780.00
NEW		**Consisting of:** · F14 Multifunctional strainer (# 40963000)		
NEW		**Alternative products:** · Aquno Select M81 Single lever kitchen mixer 250, pull-out spout, 2jet	Chrome Stainless Steel Finish	73836000 73836800	550.00 720.00
NEW	 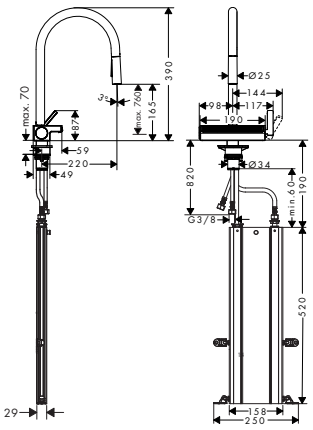	**Aquno Select M81 Single lever kitchen mixer 170, pull-out spray, 3jet, sBox** · consists of: single lever kitchen mixer, hose box, multifunctional colander · ComfortZone 170 · swivel range adjustable in 4 steps 60°, 110°, 150° or 360° · laminar spray and shower spray, SatinFlow · lockable shower spray, spray returns through pressing spray diverter · MagFit magnetic shower support · quick connect shower hose · connection dimension: DN15 · ceramic cartridge · connection type: G ⅜ connections · integrated non-return valve · not suitable for continuous flow water heaters · sBox for quiet, smooth and protected hose guidance in the cabinet, under the countertop, with extension length up to 76 cm · tap hole with Ø 35 mm required · additional comment: change between wide spray and pull-out spout at the touch of a button	Chrome Stainless Steel Finish	73831000 73831800	650.00 850.00
NEW		**Consisting of:** · F14 Multifunctional strainer (# 40963000)		
NEW		**Alternative products:** · Aquno Select M81 Single lever kitchen mixer 170, pull-out spray, 3jet	Chrome Stainless Steel Finish	73837000 73837800	600.00 780.00

Measurements within scale drawings are in mm.

Metris Select M71



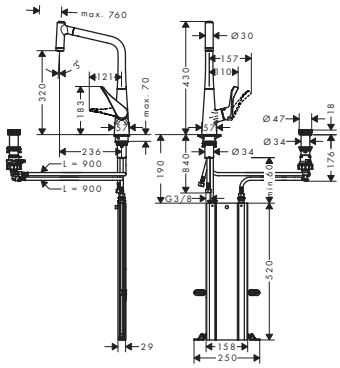

		finish	code no.	Euro
	Metris Select M71 2-hole single lever kitchen mixer 320, pull-out spray, 2jet, sBox · consists of: 2-hole single lever kitchen mixer, control unit, hose box · ComfortZone 320 · swivel range adjustable in 2 steps to 110° or 150° · flexible position of faucet controls, 2 tap holes with Ø 35 mm required · push of control unit: intuitive start and stop function of the water flow, turn: automatic drain operation · laminar spray and shower spray · lockable shower spray, spray returns automatically through handle closing · MagFit magnetic shower support · connection dimension: DN15 · flow rate 7 l/ min · ceramic cartridge · connection type: G ⅜ connections · integrated non-return valve · suitable for continuous flow water heaters · sBox for quiet, smooth and protected hose guidance in the cabinet, under the countertop, with extension length up to 76 cm	Chrome Stainless Steel Finish	73806000 73806800	590.00 767.10
	Alternative products:			
NEW	· Metris Select M71 2-hole single lever kitchen mixer 320, Eco, pull-out spray, 2jet, sBox	Chrome	73827000	590.00



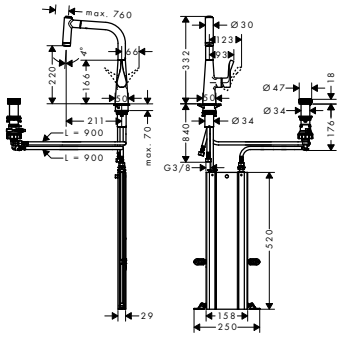

		finish	code no.	Euro
	Metris Select M71 2-hole single lever kitchen mixer 220, pull-out spray, 2jet, sBox · consists of: 2-hole single lever kitchen mixer, control unit, hose box · ComfortZone 220 · swivel range adjustable in 2 steps to 110° or 150° · flexible position of faucet controls, 2 tap holes with Ø 35 mm required · push of control unit: intuitive start and stop function of the water flow, turn: automatic drain operation · laminar spray and shower spray · lockable shower spray, spray returns automatically through handle closing · MagFit magnetic shower support · connection dimension: DN15 · flow rate 7 l/ min · ceramic cartridge · connection type: G ⅜ connections · integrated non-return valve · suitable for continuous flow water heaters · sBox for quiet, smooth and protected hose guidance in the cabinet, under the countertop, with extension length up to 76 cm	Chrome Stainless Steel Finish	73805000 73805800	547.90 712.30
	Alternative products:			
NEW	· Metris Select M71 2-hole single lever kitchen mixer 220, Eco, pull-out spray, 2jet, sBox	Chrome	73826000	547.90

Measurements within scale drawings are in mm.

Technical specifications and units of measure are subject to change.

	finish	code no.	Euro
Metris Select M71 2-hole single lever kitchen mixer 200, pull-out spray, 2jet	Chrome	73819000	470.00
	Stainless Steel Finish	73819800	611.00



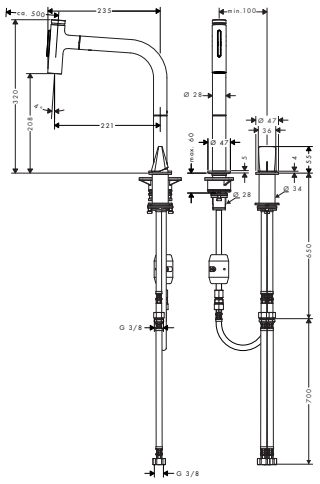

- ComfortZone 200
- swivel range adjustable in 2 steps to 110° or 150°
- flexible position of faucet controls, 2 tap holes with Ø 35 mm required
- laminar spray and shower spray
- lockable shower spray, spray returns through pressing spray diverter and spray returns automatically through handle closing
- Select button for a comfortable start/stop of the water flow
- MagFit magnetic shower support
- quick connect shower hose
- connection dimension: DN15
- flow rate 8 l/ min
- ceramic cartridge
- connection type: G ⅜ connections
- integrated non-return valve
- suitable for continuous flow water heaters
- tap hole with Ø 35 mm required

Metris Select M71 2-hole single lever kitchen mixer 200, pull-out spray, 2jet, sBox	Chrome	73818000	527.40
	Brushed Black	73818340	790.50
NEW	Chrome		
NEW	Matt Black	73818670	737.30
	Stainless Steel Finish	73818800	681.00



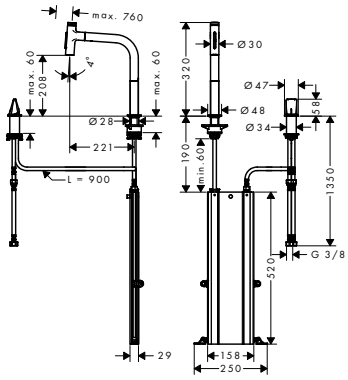

- consists of: 2-hole single lever kitchen mixer, control unit, hose box
- ComfortZone 200
- swivel range adjustable in 2 steps to 110° or 150°
- flexible position of faucet controls, 2 tap holes with Ø 35 mm required
- laminar spray and shower spray
- lockable shower spray, spray returns through pressing spray diverter and spray returns automatically through handle closing
- Select button for a comfortable start/stop of the water flow
- MagFit magnetic shower support
- quick connect shower hose
- connection dimension: DN15
- flow rate 8 l/ min
- ceramic cartridge
- connection type: G ⅜ connections
- integrated non-return valve
- suitable for continuous flow water heaters
- sBox for quiet, smooth and protected hose guidance in the cabinet, under the countertop, with extension length up to 76 cm
- tap hole with Ø 35 mm required

Alternative products:

· Metris Select M71 2-hole single lever kitchen mixer 200, pull-out spout, 1jet, sBox	Chrome	73804000	526.90
	Stainless Steel Finish	73804800	685.00

Measurements within scale drawings are in mm.

Technical specifications and units of measure are subject to change.

	finish	code no.	Euro



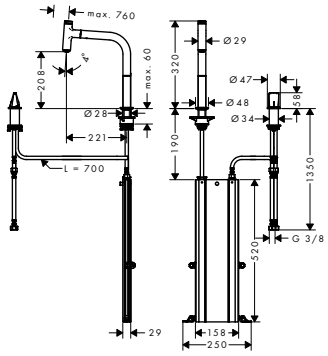

Metris Select M71 2-hole single lever kitchen mixer 200, pull-out spout, 1jet, sBox

Chrome 73804000 526.90
Stainless Steel Finish 73804800 685.00

Select · Air Power · Quick Clean · Comfort Zone

- consists of: 2-hole single lever kitchen mixer, control unit, hose box
- ComfortZone 200
- swivel range adjustable in 2 steps to 110° or 150°
- flexible position of faucet controls, 2 tap holes with Ø 35 mm required
- normal spray
- Select button for a comfortable start/stop of the water flow
- MagFit magnetic shower support
- quick connect shower hose
- connection dimension: DN15
- flow rate 8 l/ min
- ceramic cartridge
- connection type: G ⅜ connections
- integrated non-return valve
- suitable for continuous flow water heaters
- sBox for quiet, smooth and protected hose guidance in the cabinet, under the countertop, with extension length up to 76 cm

Alternative products:

NEW · Metris Select M71 2-hole single lever kitchen mixer 200, Eco, pull-out spout, 1jet, sBox — Chrome 73825000 526.90

NEW · Metris Select M71 2-hole single lever kitchen mixer 200, pull-out spray, 2jet, sBox

Chrome	73818000	527.40
NEW Brushed Black	73818340	790.50
NEW Chrome Matt Black	73818670	737.30
Stainless Steel Finish	73818800	681.00

NEW



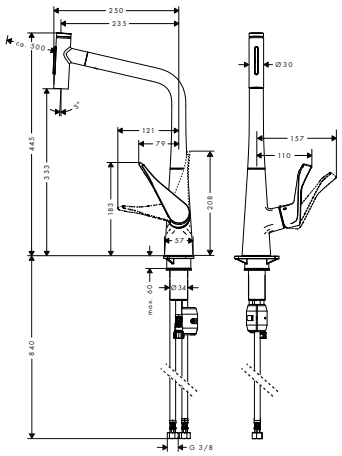

Metris Select M71 Single lever kitchen mixer 320, pull-out spray, 2jet

Chrome 73820000 475.80
Stainless Steel Finish 73820800 618.50

Select · Quick Clean · Comfort Zone

- ComfortZone 320
- swivel range adjustable in 2 steps to 110° or 150°
- laminar spray and shower spray
- lockable shower spray, spray returns through pressing spray diverter and spray returns automatically through handle closing
- Select button for a comfortable start/stop of the water flow
- MagFit magnetic shower support
- connection dimension: DN15
- flow rate 8 l/ min
- ceramic cartridge
- connection type: G ⅜ connections
- integrated non-return valve
- suitable for continuous flow water heaters
- tap hole with Ø 35 mm required

Alternative products:

· Metris Select M71 Single lever kitchen mixer 320, pull-out spout, 1jet — Chrome 14884000 475.00; Stainless Steel Finish 14884800 617.50

Measurements within scale drawings are in mm.

Technical specifications and units of measure are subject to change.

	finish	code no.	Euro



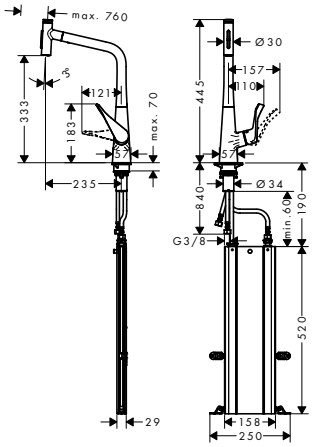

Metris Select M71 Single lever kitchen mixer 320, pull-out spray, 2jet, sBox

- consists of: single lever kitchen mixer, hose box
- ComfortZone 320
- swivel range adjustable in 2 steps to 110° or 150°
- laminar spray and shower spray
- lockable shower spray, spray returns through pressing spray diverter and spray returns automatically through handle closing
- Select button for a comfortable start/stop of the water flow
- MagFit magnetic shower support
- connection dimension: DN15
- flow rate 8 l/ min
- ceramic cartridge
- connection type: G ⅜ connections
- integrated non-return valve
- suitable for continuous flow water heaters
- sBox for quiet, smooth and protected hose guidance in the cabinet, under the countertop, with extension length up to 76 cm
- tap hole with Ø 35 mm required

	Chrome	73816000	519.00
	Stainless Steel Finish	73816800	653.10

Select · Quick Clean · Comfort Zone

Alternative products:

· Metris Select M71 Single lever kitchen mixer 320, pull-out spout, 1jet, sBox	Chrome	73803000	518.30
	Stainless Steel Finish	73803800	656.30



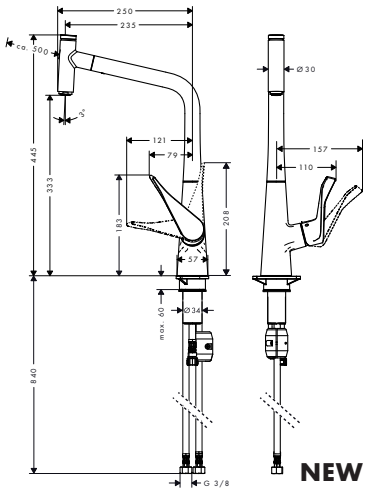

Metris Select M71 Single lever kitchen mixer 320, pull-out spout, 1jet

- ComfortZone 320
- swivel range adjustable in 2 steps to 110° or 150°
- laminar spray
- Select button for a comfortable start/stop of the water flow
- MagFit magnetic shower support
- connection dimension: DN15
- flow rate 8 l/ min
- ceramic cartridge
- connection type: G ⅜ connections
- integrated non-return valve
- suitable for continuous flow water heaters
- significantly reduced splashing by soft start of the water flow

	Chrome	14884000	475.00
	Stainless Steel Finish	14884800	617.50

Select · Comfort Zone

Alternative products:

NEW · Metris Select M71 Single lever kitchen mixer 320, Eco, pull-out spout, 1jet	Chrome	14786000	475.00
NEW · Metris Select M71 Single lever kitchen mixer 320, pull-out spray, 2jet	Chrome	73820000	475.80
	Stainless Steel Finish	73820800	618.50

Measurements within scale drawings are in mm.

Technical specifications and units of measure are subject to change.

	finish	code no.	Euro
Metris Select M71 Single lever kitchen mixer 320, pull-out spout, 1jet, sBox	Chrome	73803000	518.30
	Stainless Steel Finish	73803800	656.30



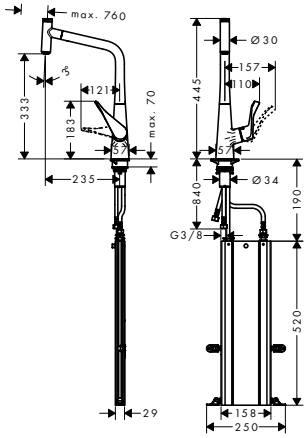

- consists of: single lever kitchen mixer, hose box
- ComfortZone 320
- swivel range adjustable in 2 steps to 110° or 150°
- laminar spray
- Select button for a comfortable start/stop of the water flow
- MagFit magnetic shower support
- quick connect shower hose
- connection dimension: DN15
- flow rate 8 l/ min
- ceramic cartridge
- connection type: G ⅜ connections
- integrated non-return valve
- suitable for continuous flow water heaters
- sBox for quiet, smooth and protected hose guidance in the cabinet, under the countertop, with extension length up to 76 cm
- significantly reduced splashing by soft start of the water flow
- tap hole with Ø 35 mm required

Alternative products:

NEW · Metris Select M71 Single lever kitchen mixer 320, Eco, pull-out spout, 1jet, sBox	Chrome	73807000	518.30
· Metris Select M71 Single lever kitchen mixer 320, pull-out spray, 2jet, sBox	Chrome	73816000	519.00
	Stainless Steel Finish	73816800	653.10

Metris Select M71 Single lever kitchen mixer 240, pull-out spray, 2jet	Chrome	73822000	424.50
	Stainless Steel Finish	73822800	552.10

NEW



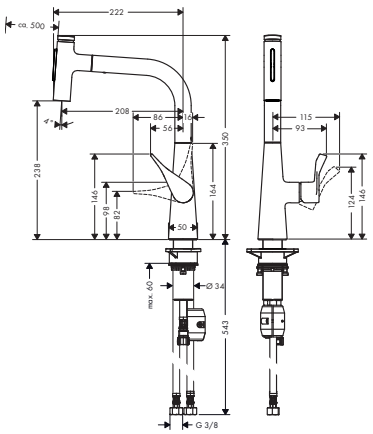

- ComfortZone 240
- l-spout
- swivel range adjustable in 2 steps to 110° or 150°
- laminar spray and shower spray
- lockable shower spray, spray returns through pressing spray diverter and spray returns automatically through handle closing
- Select button for a comfortable start/stop of the water flow
- MagFit magnetic shower support
- quick connect shower hose
- connection dimension: DN15
- flow rate 8 l/ min
- ceramic cartridge
- connection type: G ⅜ connections
- integrated non-return valve
- suitable for continuous flow water heaters
- tap hole with Ø 35 mm required

Alternative products:

· Metris Select M71 Single lever kitchen mixer 240, pull-out spout, 1jet	Chrome	14857000	424.10
	Stainless Steel Finish	14857800	551.30

Measurements within scale drawings are in mm.

Technical specifications and units of measure are subject to change.

	finish	code no.	Euro



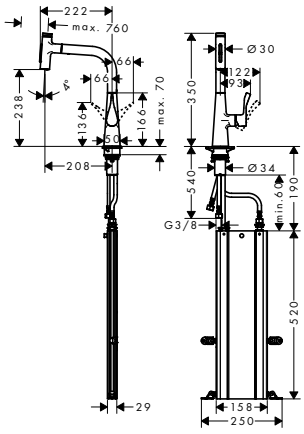

Metris Select M71 Single lever kitchen mixer 240, pull-out spray, 2jet, sBox

- consists of: single lever kitchen mixer, hose box
- ComfortZone 240
- l-spout
- swivel range adjustable in 2 steps to 110° or 150°
- laminar spray and shower spray
- lockable shower spray, spray returns through pressing spray diverter and spray returns automatically through handle closing
- Select button for a comfortable start/stop of the water flow
- MagFit magnetic shower support
- connection dimension: DN15
- flow rate 8 l/ min
- ceramic cartridge
- connection type: G ⅜ connections
- integrated non-return valve
- suitable for continuous flow water heaters
- sBox for quiet, smooth and protected hose guidance in the cabinet, under the countertop, with extension length up to 76 cm
- tap hole with Ø 35 mm required

	finish	code no.	Euro
	Chrome	73817000	471.00
	Stainless Steel Finish	73817800	590.90

Select · Quick Clean · Comfort Zone

Alternative products:

	finish	code no.	Euro
· Metris Select M71 Single lever kitchen mixer 240, pull-out spout, 1jet, sBox	Chrome	73802000	468.90
	Stainless Steel Finish	73802800	592.20



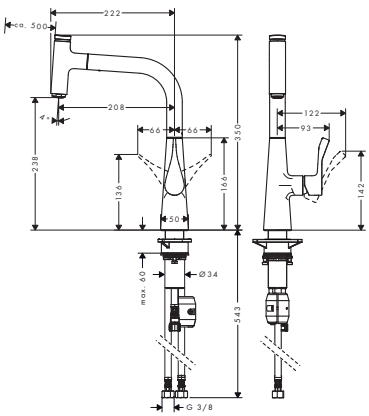

Metris Select M71 Single lever kitchen mixer 240, pull-out spout, 1jet

- ComfortZone 240
- swivel range adjustable in 2 steps to 110° or 150°
- laminar spray
- Select button for a comfortable start/stop of the water flow
- MagFit magnetic shower support
- connection dimension: DN15
- flow rate 8 l/ min
- ceramic cartridge
- connection type: G ⅜ connections
- integrated non-return valve
- suitable for continuous flow water heaters
- significantly reduced splashing by soft start of the water flow

	finish	code no.	Euro
	Chrome	14857000	424.10
	Stainless Steel Finish	14857800	551.30

Select · Comfort Zone

Alternative products:

NEW

	finish	code no.	Euro
· Metris Select M71 Single lever kitchen mixer 240, pull-out spray, 2jet	Chrome	73822000	424.50
	Stainless Steel Finish	73822800	552.10

Measurements within scale drawings are in mm.

Technical specifications and units of measure are subject to change.

	finish	code no.	Euro



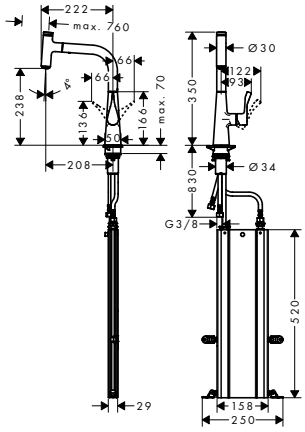

Metris Select M71 Single lever kitchen mixer 240, pull-out spout, 1jet, sBox

- consists of: single lever kitchen mixer, hose box
- ComfortZone 240
- swivel range adjustable in 2 steps to 110° or 150°
- laminar spray
- Select button for a comfortable start/stop of the water flow
- MagFit magnetic shower support
- connection dimension: DN15
- flow rate 8 l/ min
- ceramic cartridge
- connection type: G ⅜ connections
- integrated non-return valve
- suitable for continuous flow water heaters
- sBox for quiet, smooth and protected hose guidance in the cabinet, under the countertop, with extension length up to 76 cm
- significantly reduced splashing by soft start of the water flow
- tap hole with Ø 35 mm required

Chrome	73802000	468.90
Stainless Steel Finish	73802800	592.20

Alternative products:

- Metris Select M71 Single lever kitchen mixer 240, pull-out spray, 2jet, sBox

Chrome	73817000	471.00
Stainless Steel Finish	73817800	590.90



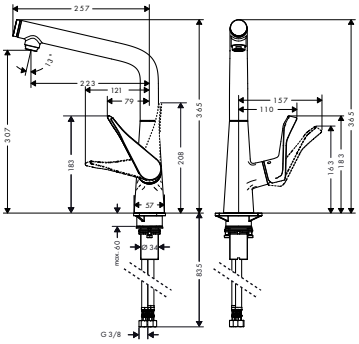

Metris Select M71 Single lever kitchen mixer 320, 1jet

- ComfortZone 320
- swivel range adjustable in 3 steps 110°, 150° or 360°
- laminar spray
- Select button for a comfortable start/stop of the water flow
- connection dimension: DN15
- flow rate 8 l/ min
- ceramic cartridge
- connection type: G ⅜ connections
- integrated non-return valve
- suitable for continuous flow water heaters
- significantly reduced splashing by soft start of the water flow

Chrome	14883000	402.70
Stainless Steel Finish	14883800	513.00

Alternative products:

NEW

- Metris Select M71 Single lever kitchen mixer 320, Eco, 1jet

Chrome	14785000	402.70



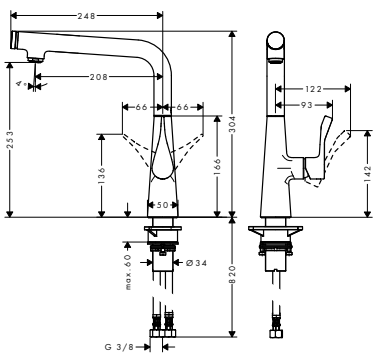

Metris Select M71 Single lever kitchen mixer 260, 1jet

- ComfortZone 260
- swivel range adjustable in 3 steps 110°, 150° or 360°
- laminar spray
- Select button for a comfortable start/stop of the water flow
- connection dimension: DN15
- flow rate 10 l/ min
- ceramic cartridge
- connection type: G ⅜ connections
- integrated non-return valve
- suitable for continuous flow water heaters
- significantly reduced splashing by soft start of the water flow

Chrome	14847000	353.00
Stainless Steel Finish	14847800	459.40

Measurements within scale drawings are in mm.

Technical specifications and units of measure are subject to change.

Metris M71

	finish	code no.	Euro
Metris M71 Single lever kitchen mixer 320, pull-out spray, 2jet · ComfortZone 320 · swivel range adjustable in 2 steps to 110° or 150° · laminar spray and shower spray · lockable shower spray, spray returns automatically through handle closing · MagFit magnetic shower support · quick connect shower hose · connection dimension: DN15 · flow rate 10 l/ min · ceramic cartridge · connection type: G ⅜ connections · integrated non-return valve · suitable for continuous flow water heaters	Chrome Stainless Steel Finish	14820000 14820800	464.00 602.90
Alternative products: · Metris M71 Single lever kitchen mixer 320, Eco, pull-out spray, 2jet	Chrome	14780000	464.00

NEW

Metris M71 Single lever kitchen mixer 320, pull-out spray, 2jet, sBox · consists of: single lever kitchen mixer, hose box · ComfortZone 320 · swivel range adjustable in 2 steps to 110° or 150° · laminar spray and shower spray · lockable shower spray, spray returns automatically through handle closing · MagFit magnetic shower support · connection dimension: DN15 · flow rate 8 l/ min · ceramic cartridge · connection type: G ⅜ connections · integrated non-return valve · suitable for continuous flow water heaters · sBox for quiet, smooth and protected hose guidance in the cabinet, under the countertop, with extension length up to 76 cm · tap hole with Ø 35 mm required	Chrome Stainless Steel Finish	73801000 73801800	507.50 642.30
Alternative products: · Metris M71 Single lever kitchen mixer 320, Eco, pull-out spray, 2jet, sBox	Chrome	73824000	507.50

NEW

Metris M71 Single lever kitchen mixer 220, pull-out spray, 2jet · ComfortZone 220 · swivel range adjustable in 2 steps to 110° or 150° · laminar spray and shower spray · lockable shower spray, spray returns automatically through handle closing · MagFit magnetic shower support · quick connect shower hose · connection dimension: DN15 · flow rate 9 l/ min · ceramic cartridge · connection type: G ⅜ connections · integrated non-return valve · suitable for continuous flow water heaters	Chrome Stainless Steel Finish	14834000 14834800	413.30 537.20

Measurements within scale drawings are in mm.

Technical specifications and units of measure are subject to change.

	finish	code no.	Euro
Metris M71 Single lever kitchen mixer 220, pull-out spray, 2jet, sBox	Chrome	73800000	458.30
	Stainless Steel Finish	73800800	578.50



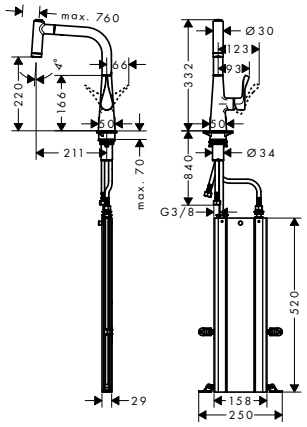

- consists of: single lever kitchen mixer, hose box
- ComfortZone 220
- swivel range adjustable in 2 steps to 110° or 150°
- laminar spray and shower spray
- lockable shower spray, spray returns automatically through handle closing
- MagFit magnetic shower support
- connection dimension: DN15
- flow rate 8 l/min
- ceramic cartridge
- connection type: G ⅜ connections
- integrated non-return valve
- suitable for continuous flow water heaters
- sBox for quiet, smooth and protected hose guidance in the cabinet, under the countertop, with extension length up to 76 cm
- tap hole with Ø 35 mm required

Alternative products:

NEW

- Metris M71 Single lever kitchen mixer 220, Eco, pull-out spray, 2jet, sBox — Chrome — 73823000 — 458.30

Metris M71 Single lever kitchen mixer 320, pull-out spout, 1jet	Chrome	14821000	374.60
	Stainless Steel Finish	14821800	487.70



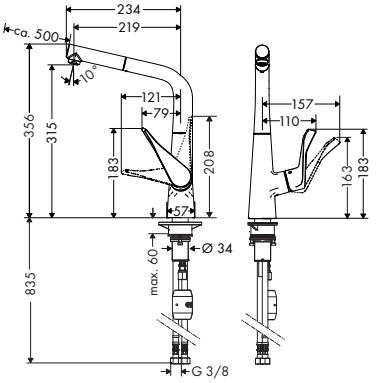

- ComfortZone 320
- swivel range adjustable in 2 steps to 110° or 150°
- laminar spray
- MagFit magnetic shower support
- quick connect shower hose
- connection dimension: DN15
- flow rate 10 l/min
- ceramic cartridge
- connection type: G ⅜ connections
- integrated non-return valve
- suitable for continuous flow water heaters
- significantly reduced splashing by soft start of the water flow

Alternative products:

NEW

- Metris M71 Single lever kitchen mixer 320, Eco, pull-out spout, 1jet — Chrome — 14781000 — 374.60

Measurements within scale drawings are in mm.

Technical specifications and units of measure are subject to change.

	finish	code no.	Euro
Metris M71 Single lever kitchen mixer 320, pull-out spout, 1jet, sBox · consists of: single lever kitchen mixer, hose box · ComfortZone 320 · swivel range adjustable in 2 steps to 110° or 150° · laminar spray · MagFit magnetic shower support · connection dimension: DN15 · flow rate 10 l/min · ceramic cartridge · connection type: G ⅜ connections · integrated non-return valve · suitable for continuous flow water heaters · sBox for quiet, smooth and protected hose guidance in the cabinet, under the countertop, with extension length up to 76 cm · significantly reduced splashing by soft start of the water flow · tap hole with Ø 35 mm required	Chrome Stainless Steel Finish	73812000 73812800	421.00 530.50
Alternative products:			
NEW · Metris M71 Single lever kitchen mixer 320, Eco, pull-out spout, 1jet, sBox	Chrome	73828000	421.00
Metris M71 Single lever kitchen mixer 320, 1jet · ComfortZone 320 · swivel range adjustable in 3 steps 110°, 150° or 360° · laminar spray · connection dimension: DN15 · flow rate 13 l/min · ceramic cartridge · connection type: G ⅜ connections · suitable for continuous flow water heaters · significantly reduced splashing by soft start of the water flow	Chrome Stainless Steel Finish	14822000 14822800	317.00 412.20
Alternative products:			
NEW · Metris M71 Single lever kitchen mixer 320, Eco, 1jet	Chrome	14782000	317.00
· Metris M71 Single lever kitchen mixer 320, installation in front of a window, 1jet	Chrome	14823000	374.60
Metris M71 Single lever kitchen mixer 320, installation in front of a window, 1jet · ComfortZone 320 · swivel range adjustable in 3 steps 110°, 150° or 360° · installation in front of the window, can be laid flat, base height 57 mm · laminar spray · connection dimension: DN15 · flow rate 15 l/min · ceramic cartridge · connection type: G ⅜ connections · suitable for continuous flow water heaters · significantly reduced splashing by soft start of the water flow	Chrome	14823000	374.60
Alternative products:			
· Metris M71 Single lever kitchen mixer 320, 1jet	Chrome Stainless Steel Finish	14822000 14822800	317.00 412.20

Measurements within scale drawings are in mm.

Technical specifications and units of measure are subject to change.

	finish	code no.	Euro



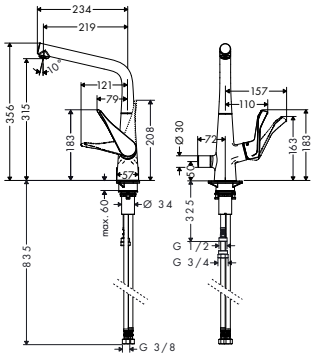

Metris M71 Single lever kitchen mixer 320, device shut-off valve,1jet
- ComfortZone 320
- swivel range adjustable in 3 steps 110°, 150° or 360°
- laminar spray
- with integrated shut-off valve
- connection dimension: DN15
- flow rate 13 l/ min
- ceramic cartridge
- connection type: G ⅜ connections
- suitable for continuous flow water heaters
- significantly reduced splashing by soft start of the water flow

Chrome 14888000 428.40

Comfort Zone

Talis Select M51

NEW



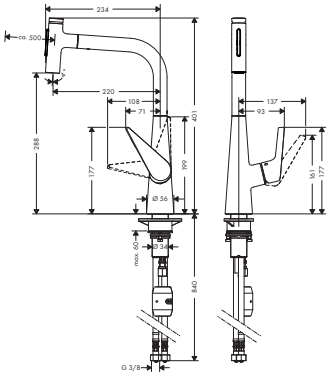

Talis Select M51 Single lever kitchen mixer 300, pull-out spray, 2jet
- ComfortZone 300
- swivel range adjustable in 2 steps to 110° or 150°
- laminar spray and shower spray
- lockable shower spray, spray returns through pressing spray diverter and spray returns automatically through handle closing
- Select button for a comfortable start/stop of the water flow
- MagFit magnetic shower support
- quick connect shower hose
- connection dimension: DN15
- flow rate 8 l/ min
- ceramic cartridge
- connection type: G ⅜ connections
- integrated non-return valve
- suitable for continuous flow water heaters
- tap hole with Ø 35 mm required

Chrome 72823000 441.50
Stainless Steel Finish 72823800 574.20

Select · Quick Clean · Comfort Zone

Alternative products:
- Talis Select M51 Single lever kitchen mixer 300, pull-out spout, 1jet

Chrome 72821000 441.00
Stainless Steel Finish 72821800 573.40



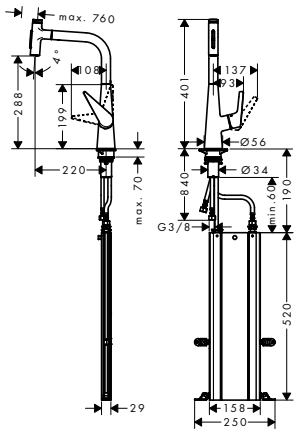

Talis Select M51 Single lever kitchen mixer 300, pull-out spray, 2jet, sBox
- consists of: single lever kitchen mixer, hose box
- ComfortZone 300
- swivel range adjustable in 2 steps to 110° or 150°
- laminar spray and shower spray
- lockable shower spray, spray returns through pressing spray diverter and spray returns automatically through handle closing
- Select button for a comfortable start/stop of the water flow
- MagFit magnetic shower support
- connection dimension: DN15
- flow rate 8 l/ min
- ceramic cartridge
- connection type: G ⅜ connections
- integrated non-return valve
- suitable for continuous flow water heaters
- sBox for quiet, smooth and protected hose guidance in the cabinet, under the countertop, with extension length up to 76 cm
- tap hole with Ø 35 mm required

Chrome 73867000 487.00
Stainless Steel Finish 73867800 611.60

Select · Quick Clean · Comfort Zone

Alternative products:
- Talis Select M51 Single lever kitchen mixer 300, pull-out spout, 1jet, sBox

Chrome 73853000 485.40
Stainless Steel Finish 73853800 613.60

Measurements within scale drawings are in mm.

Technical specifications and units of measure are subject to change.

	finish	code no.	Euro



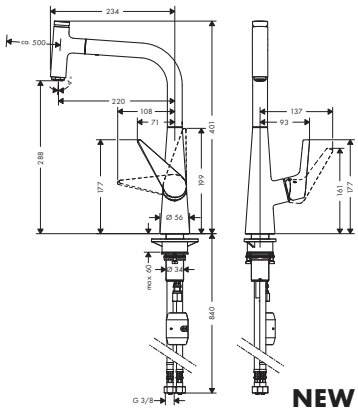

Talis Select M51 Single lever kitchen mixer 300, pull-out spout, 1jet

- ComfortZone 300
- swivel range adjustable in 2 steps to 110° or 150°
- normal spray
- Select button for a comfortable start/stop of the water flow
- MagFit magnetic shower support
- connection dimension: DN15
- flow rate 8 l/ min
- ceramic cartridge
- connection type: G ⅜ connections
- integrated non-return valve
- suitable for continuous flow water heaters

Chrome	72821000	441.00
Stainless Steel Finish	72821800	573.40

Select · Air Power · Quick Clean · Comfort Zone

Alternative products:

NEW
- Talis Select M51 Single lever kitchen mixer 300. Eco, pull-out spout, 1jet

Chrome	72826000	441.00

NEW
- Talis Select M51 Single lever kitchen mixer 300, pull-out spray, 2jet

Chrome	72823000	441.50
Stainless Steel Finish	72823800	574.20



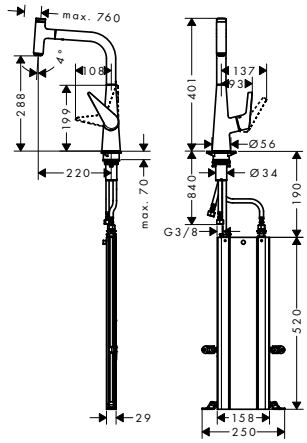

Talis Select M51 Single lever kitchen mixer 300, pull-out spout, 1jet, sBox

- consists of: single lever kitchen mixer, hose box
- ComfortZone 300
- swivel range adjustable in 2 steps to 110° or 150°
- normal spray
- Select button for a comfortable start/stop of the water flow
- MagFit magnetic shower support
- quick connect shower hose
- connection dimension: DN15
- flow rate 8 l/ min
- ceramic cartridge
- connection type: G ⅜ connections
- integrated non-return valve
- suitable for continuous flow water heaters
- sBox for quiet, smooth and protected hose guidance in the cabinet, under the countertop, with extension length up to 76 cm
- tap hole with Ø 35 mm required

Chrome	73853000	485.40
Stainless Steel Finish	73853800	613.60

Select · Air Power · Quick Clean · Comfort Zone

Alternative products:

- Talis Select M51 Single lever kitchen mixer 300, pull-out spray, 2jet, sBox

Chrome	73867000	487.00
Stainless Steel Finish	73867800	611.60

Measurements within scale drawings are in mm.

Technical specifications and units of measure are subject to change.

	finish	code no.	Euro

NEW



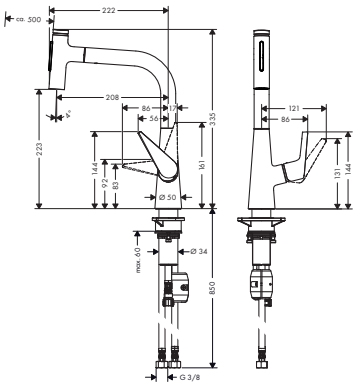

Talis Select M51 Single lever kitchen mixer 220, pull-out spray, 2jet

- ComfortZone 220
- swivel range adjustable in 2 steps to 110° or 150°
- laminar spray and shower spray
- lockable shower spray, spray returns through pressing spray diverter and spray returns automatically through handle closing
- Select button for a comfortable start/stop of the water flow
- MagFit magnetic shower support
- quick connect shower hose
- connection dimension: DN15
- flow rate 8 l/ min
- ceramic cartridge
- connection type: G ⅜ connections
- integrated non-return valve
- suitable for continuous flow water heaters
- tap hole with Ø 35 mm required

	Chrome	72824000	392.10
	Stainless Steel Finish	72824800	509.20

Alternative products:

· Talis Select M51 Single lever kitchen mixer 220, pull-out spout, 1jet	Chrome	72822000	391.50
	Stainless Steel Finish	72822800	508.90



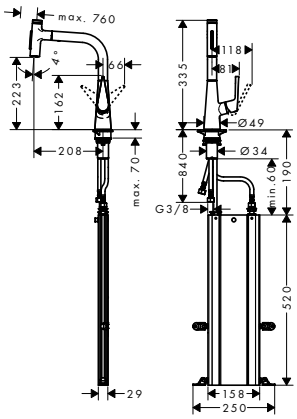

Talis Select M51 Single lever kitchen mixer 220, pull-out spray, 2jet, sBox

- consists of: single lever kitchen mixer, hose box
- ComfortZone 220
- swivel range adjustable in 2 steps to 110° or 150°
- laminar spray and shower spray
- lockable shower spray, spray returns through pressing spray diverter and spray returns automatically through handle closing
- Select button for a comfortable start/stop of the water flow
- MagFit magnetic shower support
- quick connect shower hose
- connection dimension: DN15
- flow rate 8 l/ min
- ceramic cartridge
- connection type: G ⅜ connections
- integrated non-return valve
- suitable for continuous flow water heaters
- sBox for quiet, smooth and protected hose guidance in the cabinet, under the countertop, with extension length up to 76 cm
- tap hole with Ø 35 mm required

	Chrome	73868000	440.30
	Stainless Steel Finish	73868800	550.90

Alternative products:

· Talis Select M51 Single lever kitchen mixer 220, pull-out spout, 1jet, sBox	Chrome	73852000	437.30
	Stainless Steel Finish	73852800	551.10



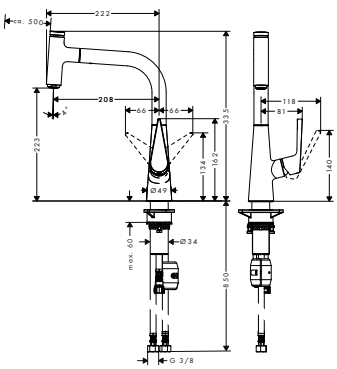

NEW

Talis Select M51 Single lever kitchen mixer 220, pull-out spout, 1jet

- ComfortZone 220
- swivel range adjustable in 2 steps to 110° or 150°
- normal spray
- Select button for a comfortable start/stop of the water flow
- MagFit magnetic shower support
- connection dimension: DN15
- flow rate 10 l/ min
- ceramic cartridge
- connection type: G ⅜ connections
- integrated non-return valve
- suitable for continuous flow water heaters

	Chrome	72822000	391.50
	Stainless Steel Finish	72822800	508.90

Alternative products:

· Talis Select M51 Single lever kitchen mixer 220, pull-out spray, 2jet	Chrome	72824000	392.10
	Stainless Steel Finish	72824800	509.20

Measurements within scale drawings are in mm.

Technical specifications and units of measure are subject to change.

	finish	code no.	Euro



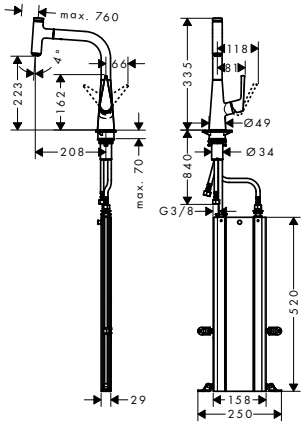

Talis Select M51 Single lever kitchen mixer 220, pull-out spout, 1jet, sBox

- consists of: single lever kitchen mixer, hose box
- ComfortZone 220
- swivel range adjustable in 2 steps to 110° or 150°
- normal spray
- Select button for a comfortable start/stop of the water flow
- MagFit magnetic shower support
- connection dimension: DN15
- flow rate 8 l/ min
- ceramic cartridge
- connection type: G ⅜ connections
- integrated non-return valve
- suitable for continuous flow water heaters
- sBox for quiet, smooth and protected hose guidance in the cabinet, under the countertop, with extension length up to 76 cm
- tap hole with Ø 35 mm required

Chrome	73852000	437.30
Stainless Steel Finish	73852800	551.10

Select · Air Power · Quick Clean · Comfort Zone

Alternative products:

- Talis Select M51 Single lever kitchen mixer 220, pull-out spray, 2jet, sBox

Chrome	73868000	440.30
Stainless Steel Finish	73868800	550.90



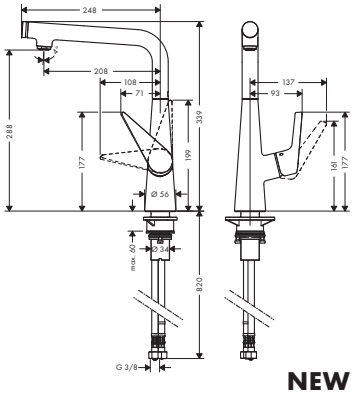

NEW

Talis Select M51 Single lever kitchen mixer 300, 1jet

- ComfortZone 300
- swivel range adjustable in 3 steps 110°, 150° or 360°
- normal spray
- Select button for a comfortable start/stop of the water flow
- connection dimension: DN15
- flow rate 8 l/ min
- ceramic cartridge
- connection type: G ⅜ connections
- integrated non-return valve
- suitable for continuous flow water heaters

Chrome	72820000	364.10
Stainless Steel Finish	72820800	473.40

Select · Air Power · Quick Clean · Comfort Zone

Alternative products:

- Talis Select M51 Single lever kitchen mixer 300, Eco, 1jet

Chrome	72825000	364.10

Talis M51



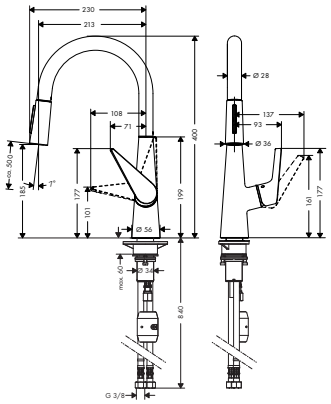

NEW

Talis M51 Single lever kitchen mixer 200, pull-out spray, 2jet

- ComfortZone 200
- swivel range adjustable in 2 steps to 110° or 150°
- laminar spray and shower spray
- lockable shower spray, spray returns through pressing spray diverter
- MagFit magnetic shower support
- quick connect shower hose
- connection dimension: DN15
- flow rate 11 l/ min
- ceramic cartridge
- connection type: G ⅜ connections
- integrated non-return valve
- suitable for continuous flow water heaters

Chrome	72813000	362.00
Stainless Steel Finish	72813800	470.40

Quick Clean · Comfort Zone

Alternative products:

- Talis M51 Single lever kitchen mixer 200, Eco, pull-out spray, 2jet

Chrome	72817000	362.00

Measurements within scale drawings are in mm.

Technical specifications and units of measure are subject to change.

	finish	code no.	Euro



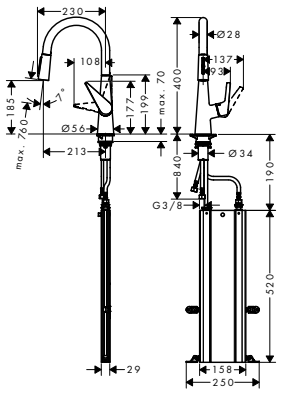

Talis M51 Single lever kitchen mixer 200, pull-out spray, 2jet, sBox
- consists of: single lever kitchen mixer, hose box
- ComfortZone 200
- swivel range adjustable in 2 steps to 110° or 150°
- laminar spray and shower spray
- lockable shower spray, spray returns through pressing spray diverter
- MagFit magnetic shower support
- connection dimension: DN15
- flow rate 8 l/min
- ceramic cartridge
- connection type: G ⅜ connections
- integrated non-return valve
- suitable for continuous flow water heaters
- sBox for quiet, smooth and protected hose guidance in the cabinet, under the countertop, with extension length up to 76 cm
- tap hole with Ø 35 mm required

Chrome	73851000	408.70
Stainless Steel Finish	73851800	513.70

Quick Clean · Comfort Zone

Alternative products:

NEW

- Talis M51 Single lever kitchen mixer 200, Eco, pull-out spray, 2jet, sBox

Chrome	73876000	408.70



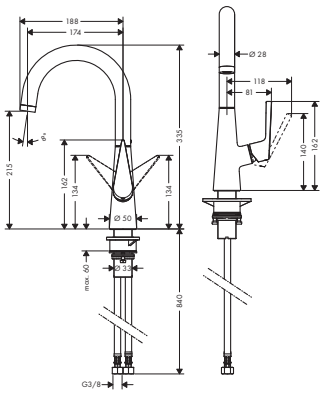

Talis M51 Single lever kitchen mixer 220, 1jet
- ComfortZone 220
- swivel range adjustable in 3 steps 110°, 150° or 360°
- normal spray
- connection dimension: DN15
- flow rate 10 l/min
- ceramic cartridge
- connection type: G ⅜ connections
- suitable for continuous flow water heaters

Chrome	72814000	221.30
Stainless Steel Finish	72814800	287.60

Air Power · Quick Clean · Comfort Zone



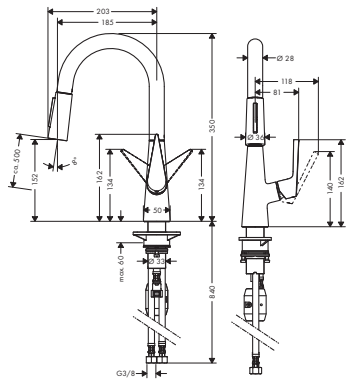

Talis M51 Single lever kitchen mixer 160, pull-out spray, 2jet
- ComfortZone 160
- swivel range adjustable in 2 steps to 110° or 150°
- laminar spray and shower spray
- lockable shower spray, spray returns through pressing spray diverter
- MagFit magnetic shower support
- quick connect shower hose
- connection dimension: DN15
- flow rate 11 l/min
- ceramic cartridge
- connection type: G ⅜ connections
- integrated non-return valve
- suitable for continuous flow water heaters

Chrome	72815000	315.40
Stainless Steel Finish	72815800	410.00

Quick Clean · Comfort Zone

Measurements within scale drawings are in mm.

Technical specifications and units of measure are subject to change.

	finish	code no.	Euro
Talis M51 Single lever kitchen mixer 160, pull-out spray, 2jet, sBox	Chrome	73850000	363.50
· consists of: single lever kitchen mixer, hose box · ComfortZone 160 · swivel range adjustable in 2 steps to 110° or 150° · laminar spray and shower spray · lockable shower spray, spray returns through pressing spray diverter · MagFit magnetic shower support · connection dimension: DN15 · flow rate 8 l/ min · ceramic cartridge · connection type: G ⅜ connections · integrated non-return valve · suitable for continuous flow water heaters · sBox for quiet, smooth and protected hose guidance in the cabinet, under the countertop, with extension length up to 76 cm · tap hole with Ø 35 mm required	Stainless Steel Finish	73850800	455.20
			Quick Clean · Comfort Zone



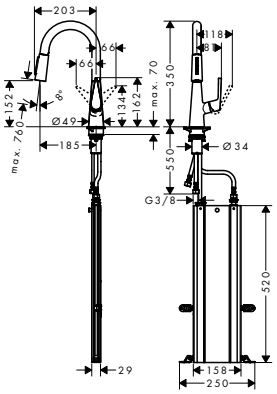

Talis M51 Single lever kitchen mixer 260, 1jet	Chrome	72810000	252.00
· ComfortZone 260 · swivel range adjustable in 3 steps 110°, 150° or 360° · normal spray · connection dimension: DN15 · flow rate 10 l/ min · ceramic cartridge · connection type: G ⅜ connections · suitable for continuous flow water heaters	Stainless Steel Finish	72810800	327.70
			Air Power · Quick Clean · Comfort Zone
Alternative products:			
· Talis M51 Single lever kitchen mixer 260, Eco, 1jet	Chrome	72816000	252.00
· Talis M51 Single lever kitchen mixer 260, LowPressure/vented hot water cylinders, 1jet	Chrome	72812000	284.90



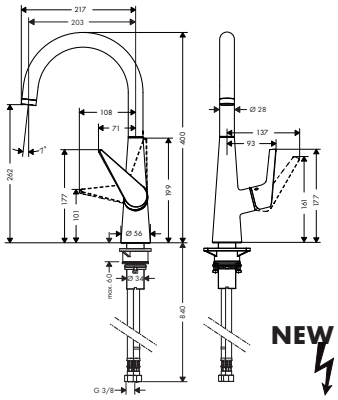

NEW

Talis M51 Single lever kitchen mixer 220, device shut-off valve, 1jet	Chrome	72811000	295.00
· ComfortZone 220 · swivel range adjustable in 3 steps 110°, 150° or 360° · normal spray · with integrated shut-off valve · connection dimension: DN15 · flow rate 10 l/ min · ceramic cartridge · connection type: G ⅜ connections · suitable for continuous flow water heaters			Air Power · Quick Clean · Comfort Zone



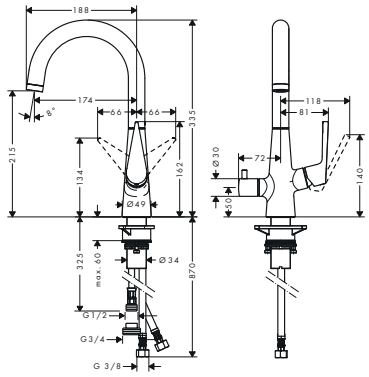

Measurements within scale drawings are in mm.

Technical specifications and units of measure are subject to change.

Talis M52

	finish	code no.	Euro



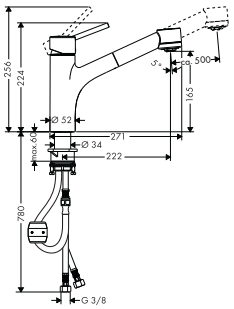

Talis M52 Single lever kitchen mixer 170, pull-out spray, 2jet — Chrome — 32841000 — 327.50

Air Power · Quick Clean · Comfort Zone

- ComfortZone 170
- swivel range 150°
- normal and spray jet
- lockable shower spray, spray returns automatically through handle closing
- connection dimension: DN15
- flow rate 10 l/min
- ceramic cartridge
- connection type: G ⅜ connections
- integrated non-return valve
- suitable for continuous flow water heaters

Alternative products:

- Talis M52 Single lever kitchen mixer 170, LowPressure/vented hot water cylinders, pull-out spray, 2jet — Chrome — 32842000 — 349.10
- NEW Talis M52 Single lever kitchen mixer 170, Eco, pull-out spray, 2jet — Chrome — 32845000 — 327.50
- Talis M52 Single lever kitchen mixer 170, LowPressure/vented hot water cylinders, pull-out spray, 2jet, sBox — Chrome — 73861000 — 349.10



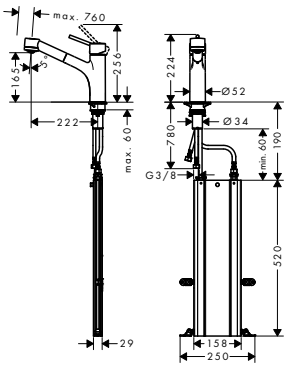

Talis M52 Single lever kitchen mixer 170, pull-out spray, 2jet, sBox — Chrome — 73860000 — 375.30; Stainless Steel Finish — 73860800 — 470.60

Air Power · Quick Clean · Comfort Zone

- consists of: single lever kitchen mixer, hose box
- ComfortZone 170
- swivel range 150°
- normal and spray jet
- lockable shower spray, spray returns automatically through handle closing
- connection dimension: DN15
- flow rate 10 l/min
- ceramic cartridge
- connection type: G ⅜ connections
- integrated non-return valve
- suitable for continuous flow water heaters
- sBox for quiet, smooth and protected hose guidance in the cabinet, under the countertop, with extension length up to 76 cm
- tap hole with Ø 35 mm required

Alternative products:

- Talis M52 Single lever kitchen mixer 170, LowPressure/vented hot water cylinders, pull-out spray, 2jet, sBox — Chrome — 73861000 — 349.10
- NEW Talis M52 Single lever kitchen mixer 170, Eco, pull-out spray, 2jet, sBox — Chrome — 73869000 — 375.30



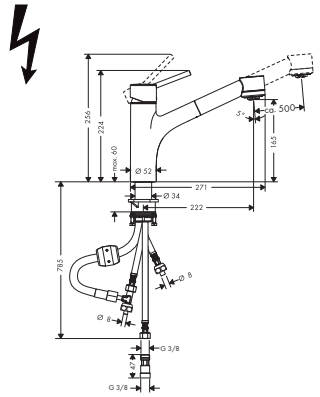

Talis M52 Single lever kitchen mixer 170, LowPressure/vented hot water cylinders, pull-out spray, 2jet — Chrome — 32842000 — 349.10

Quick Clean · Comfort Zone

- ComfortZone 170
- swivel range 150°
- normal and spray jet
- non-lockable shower spray
- connection dimension: DN15
- flow rate 5 l/min
- ceramic cartridge
- connection type: G ⅜ connections
- integrated non-return valve
- not suitable for continuous flow water heaters

Alternative products:

- Talis M52 Single lever kitchen mixer 170, pull-out spray, 2jet — Chrome — 32841000 — 327.50

Measurements within scale drawings are in mm.

Technical specifications and units of measure are subject to change.

	finish	code no.	Euro



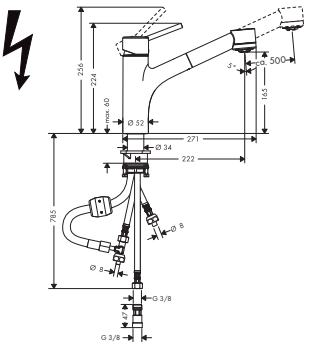

Talis M52 Single lever kitchen mixer 170, LowPressure/vented hot water cylinders, pull-out spray, 2jet, sBox
- ComfortZone 170
- swivel range 150°
- normal and spray jet
- non-lockable shower spray
- connection dimension: DN15
- flow rate 5 l/min
- ceramic cartridge
- connection type: G ⅜ connections
- integrated non-return valve
- not suitable for continuous flow water heaters
- tap hole with Ø 35 mm required

Chrome — 73861000 — 349.10

Quick Clean · Comfort Zone

Alternative products:
- Talis M52 Single lever kitchen mixer 170, pull-out spray, 2jet — Chrome — 32841000 — 327.50
- Talis M52 Single lever kitchen mixer 170, pull-out spray, 2jet, sBox — Chrome — 73860000 — 375.30; Stainless Steel Finish — 73860800 — 470.60



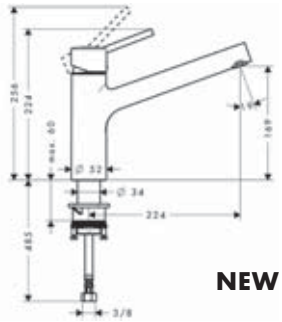

NEW

Talis M52 Single lever kitchen mixer 170, 1jet
- ComfortZone 170
- swivel range 150°
- normal spray
- connection dimension: DN15
- flow rate 16 l/min
- ceramic cartridge
- connection type: G ⅜ connections
- suitable for continuous flow water heaters

Chrome — 32851000 — 233.90

Air Power · Quick Clean · Comfort Zone

Alternative products:
- Talis M52 Single lever kitchen mixer 170, Eco, 1jet — Chrome — 32857000 — 233.90



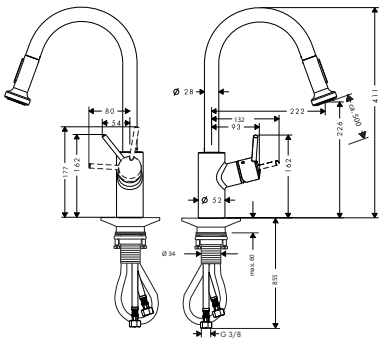

NEW

Talis M52 Single lever kitchen mixer 220, installation in front of a window, pull-out spray, 2jet
- ComfortZone 220
- swivel range 150°
- installation in front of the window, can be laid flat, base height 70 mm
- normal and spray jet
- non-lockable shower spray
- MagFit magnetic shower support
- quick connect shower hose
- connection dimension: DN15
- flow rate 11 l/min
- ceramic cartridge
- connection type: G ⅜ connections
- integrated non-return valve
- suitable for continuous flow water heaters

Chrome — 14877000 — 480.80

Air Power · Quick Clean · Comfort Zone

Alternative products:
- Talis M52 Single lever kitchen mixer 220, Eco, pull-out spray, 2jet — Chrome — 72831000 — 480.80

Measurements within scale drawings are in mm.

Technical specifications and units of measure are subject to change.

	finish	code no.	Euro



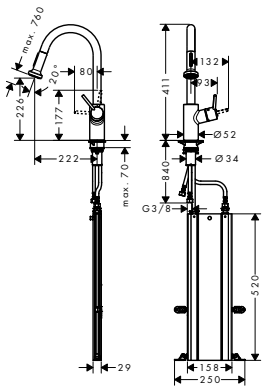

Talis M52 Single lever kitchen mixer 220, installation in front of a window, pull-out spray, 2jet, sBox

- consists of: single lever kitchen mixer, hose box
- ComfortZone 220
- swivel range 150°
- installation in front of the window, can be laid flat, base height 70 mm
- normal and spray jet
- non-lockable shower spray
- MagFit magnetic shower support
- connection dimension: DN15
- flow rate 11 l/ min
- ceramic cartridge
- connection type: G ⅜ connections
- integrated non-return valve
- suitable for continuous flow water heaters
- sBox for quiet, smooth and protected hose guidance in the cabinet, under the countertop, with extension length up to 76 cm
- tap hole with Ø 35 mm required

finish	code no.	Euro
Chrome	73863000	523.80
Stainless Steel Finish	73863800	663.60

Air Power · Quick Clean · Comfort Zone

Alternative products:

NEW

- Talis M52 Single lever kitchen mixer 220, Eco, pull-out spray, 2jet, sBox

finish	code no.	Euro
Chrome	73879000	523.80



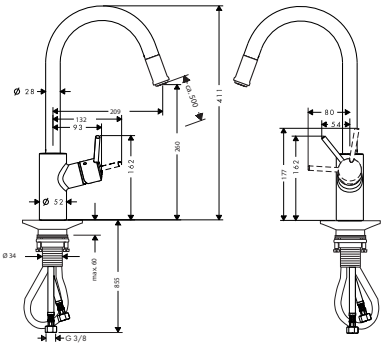

Talis M52 Single lever kitchen mixer 260, installation in front of a window, pull-out spout, 1jet

- ComfortZone 260
- swivel range 150°
- installation in front of the window, can be laid flat, base height 70 mm
- normal spray
- MagFit magnetic shower support
- quick connect shower hose
- connection dimension: DN15
- flow rate 9 l/ min
- ceramic cartridge
- connection type: G ⅜ connections
- integrated non-return valve
- suitable for continuous flow water heaters

finish	code no.	Euro
Chrome	14872000	406.70

Air Power · Quick Clean · Comfort Zone

Alternative products:

NEW

- Talis M52 Single lever kitchen mixer 260, Eco, pull-out spout, 1jet

finish	code no.	Euro
Chrome	72832000	406.70

Measurements within scale drawings are in mm.

Technical specifications and units of measure are subject to change.

	finish	code no.	Euro



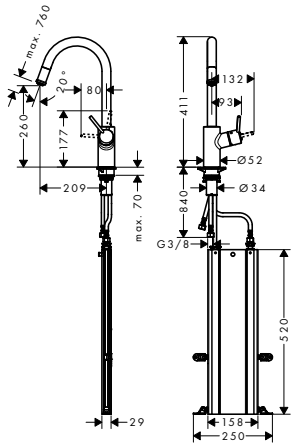

Talis M52 Single lever kitchen mixer 260, installation in front of a window, pull-out spout, 1jet, sBox

- consists of: single lever kitchen mixer, hose box
- ComfortZone 260
- swivel range 150°
- installation in front of the window, can be laid flat, base height 70 mm
- normal spray
- MagFit magnetic shower support
- connection dimension: DN15
- flow rate 9 l/ min
- ceramic cartridge
- connection type: G ⅜ connections
- integrated non-return valve
- suitable for continuous flow water heaters
- sBox for quiet, smooth and protected hose guidance in the cabinet, under the countertop, with extension length up to 76 cm
- tap hole with Ø 35 mm required

	finish	code no.	Euro
	Chrome	73864000	452.00
	Stainless Steel Finish	73864800	570.30

Air Power · Quick Clean · Comfort Zone

Alternative products:

NEW

- Talis M52 Single lever kitchen mixer 260, Eco, pull-out spout, 1jet, sBox — Chrome — 73878000 — 452.00



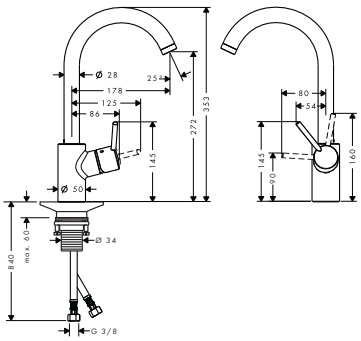

Talis M52 Single lever kitchen mixer 270, 1jet

- ComfortZone 270
- swivel range adjustable in 3 steps 110°, 150° or 360°
- normal spray
- connection dimension: DN15
- flow rate 10 l/ min
- ceramic cartridge
- connection type: G ⅜ connections
- suitable for continuous flow water heaters

	finish	code no.	Euro
	Chrome	14870000	274.30

Air Power · Quick Clean · Comfort Zone



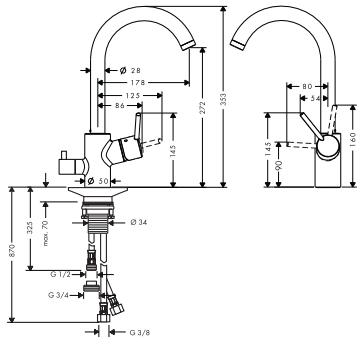

Talis M52 Single lever kitchen mixer 270, device shut-off valve, 1jet

- ComfortZone 270
- swivel range adjustable in 3 steps 110°, 150° or 360°
- normal spray
- with integrated shut-off valve
- connection dimension: DN15
- flow rate 10 l/ min
- ceramic cartridge
- connection type: G ⅜ connections
- suitable for continuous flow water heaters

	finish	code no.	Euro
	Chrome	14875000	355.60

Air Power · Quick Clean · Comfort Zone

Measurements within scale drawings are in mm.

Technical specifications and units of measure are subject to change.

Talis M54

	finish	code no.	Euro
Talis M54 Single lever kitchen mixer 210, pull-out spray, 2jet	Chrome	72800000	300.00
	Matt Black	72800670	390.00
	Stainless Steel Finish	72800800	390.00

NEW



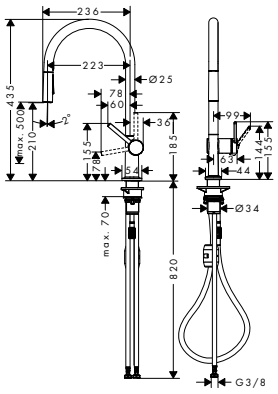

- ComfortZone 210
- swivel range adjustable in 4 steps 60°, 110°, 150° or 360°
- laminar spray and shower spray
- lockable shower spray, spray returns through pressing spray diverter and spray returns automatically through handle closing
- quick connect shower hose
- connection dimension: DN15
- flow rate 7 l/ min
- ceramic cartridge
- connection type: G ⅜ connections
- integrated non-return valve
- suitable for continuous flow water heaters
- tap hole with Ø 35 mm required

Quick Clean · Comfort Zone

Alternative products:

NEW

· Talis M54 Single lever kitchen mixer 210, Eco, pull-out spray, 2jet	Chrome	72842000	300.00
	Matt Black	72842670	390.00

Talis M54 Single lever kitchen mixer 210, pull-out spray, 2jet, sBox	Chrome	72801000	350.00
	Matt Black	72801670	455.00
	Stainless Steel Finish	72801800	455.00

NEW



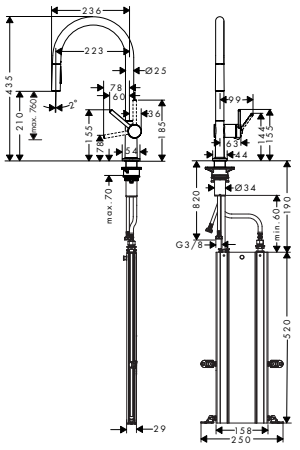

- consists of: single lever kitchen mixer, hose box
- ComfortZone 210
- swivel range adjustable in 4 steps 60°, 110°, 150° or 360°
- laminar spray and shower spray
- lockable shower spray, spray returns through pressing spray diverter and spray returns automatically through handle closing
- quick connect shower hose
- connection dimension: DN15
- flow rate 7 l/ min
- ceramic cartridge
- connection type: G ⅜ connections
- integrated non-return valve
- suitable for continuous flow water heaters
- sBox for quiet, smooth and protected hose guidance in the cabinet, under the countertop, with extension length up to 76 cm
- tap hole with Ø 35 mm required

Quick Clean · Comfort Zone

Talis M54 Single lever kitchen mixer 210, pull-out spout, 1jet	Chrome	72802000	255.00
	Matt Black	72802670	332.00
	Stainless Steel Finish	72802800	332.00

NEW



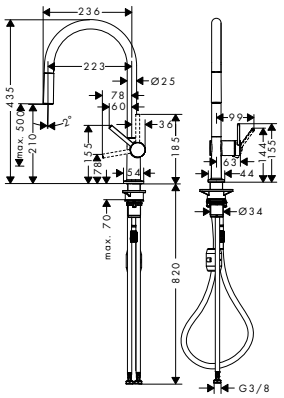

- ComfortZone 210
- swivel range adjustable in 4 steps 60°, 110°, 150° or 360°
- normal spray
- quick connect shower hose
- connection dimension: DN15
- flow rate 7 l/ min
- ceramic cartridge
- connection type: G ⅜ connections
- integrated non-return valve
- suitable for continuous flow water heaters
- tap hole with Ø 35 mm required

Air Power · Quick Clean · Comfort Zone

Measurements within scale drawings are in mm.

Technical specifications and units of measure are subject to change.

	finish	code no.	Euro
Talis M54 Single lever kitchen mixer 210, pull-out spout, 1jet, sBox	Chrome	72803000	305.00
· consists of: single lever kitchen mixer, hose box	Matt Black	72803670	397.00
· ComfortZone 210	Stainless Steel Finish	72803800	397.00
· swivel range adjustable in 4 steps 60°, 110°, 150° or 360°			
· normal spray			
· quick connect shower hose			
· connection dimension: DN15			
· flow rate 7 l/ min			
· ceramic cartridge			
· connection type: G ⅜ connections			
· integrated non-return valve			
· suitable for continuous flow water heaters			
· tap hole with Ø 35 mm required			



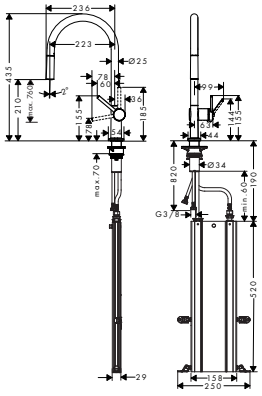

	finish	code no.	Euro
Talis M54 Single lever kitchen mixer 220, 1jet	Chrome	72804000	205.00
· ComfortZone 220	Matt Black	72804670	267.00
· swivel range adjustable in 4 steps 60°, 110°, 150° or 360°	Stainless Steel Finish	72804800	267.00
· laminar spray			
· connection dimension: DN15			
· flow rate 8 l/ min			
· ceramic cartridge			
· connection type: G ⅜ connections			
· integrated non-return valve			
· suitable for continuous flow water heaters			
· tap hole with Ø 35 mm required			
Alternative products:			
· Talis M54 Single lever kitchen mixer 220, Eco, 1jet	Chrome	72843000	205.00
	Matt Black	72843670	266.50



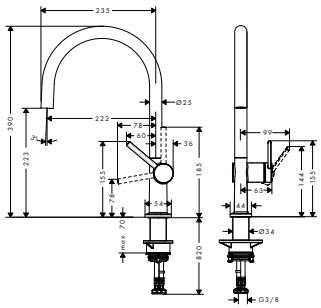

	finish	code no.	Euro
Talis M54 Single lever kitchen mixer U 220, 1jet	Chrome	72806000	180.00
· ComfortZone 220	Matt Black	72806670	234.00
· swivel range adjustable in 4 steps 60°, 110°, 150° or 360°	Stainless Steel Finish	72806800	234.00
· laminar spray			
· connection dimension: DN15			
· flow rate 8 l/ min			
· ceramic cartridge			
· connection type: G ⅜ connections			
· integrated non-return valve			
· suitable for continuous flow water heaters			
· tap hole with Ø 35 mm required			
Alternative products:			
· Talis M54 Single lever kitchen mixer U 220, Eco, 1jet	Chrome	72844000	180.00
	Matt Black	72844670	234.00



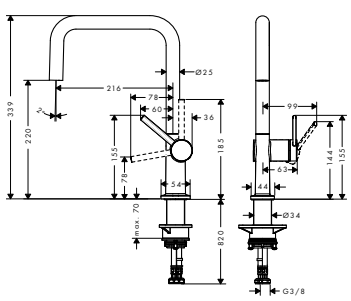

	finish	code no.	Euro
Talis M54 Single lever kitchen mixer 270, pull-out spout, 1jet	Chrome	72808000	205.00
· ComfortZone 270	Matt Black	72808670	267.00
· swivel range adjustable in 4 steps 60°, 110°, 150° or 360°	Stainless Steel Finish	72808800	267.00
· laminar spray			
· quick connect shower hose			
· connection dimension: DN15			
· flow rate 7 l/ min			
· ceramic cartridge			
· connection type: G ⅜ connections			
· integrated non-return valve			
· suitable for continuous flow water heaters			
· tap hole with Ø 35 mm required			
Alternative products:			
· Talis M54 Single lever kitchen mixer 270, Eco, pull-out spout, 1jet	Chrome	72845000	205.00
	Matt Black	72845670	266.50



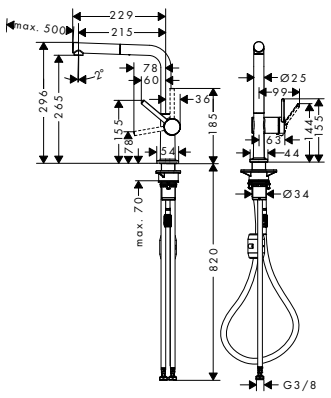

Measurements within scale drawings are in mm.

	finish	code no.	Euro
Talis M54 Single lever kitchen mixer 270, pull-out spout, 1jet, sBox	Chrome	72809000	255.00
	Matt Black	72809670	332.00
	Stainless Steel Finish	72809800	332.00

NEW



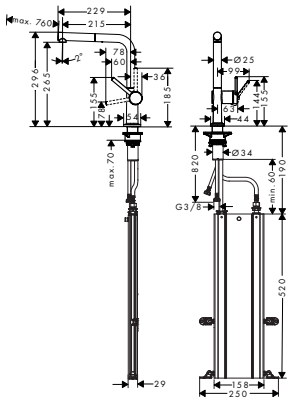

- consists of: single lever kitchen mixer, hose box
- ComfortZone 270
- swivel range adjustable in 4 steps 60°, 110°, 150° or 360°
- laminar spray
- quick connect shower hose
- connection dimension: DN15
- flow rate 7 l/ min
- ceramic cartridge
- connection type: G ⅜ connections
- integrated non-return valve
- suitable for continuous flow water heaters
- sBox for quiet, smooth and protected hose guidance in the cabinet, under the countertop, with extension length up to 76 cm
- tap hole with Ø 35 mm required

Talis M54 Single lever kitchen mixer 270, 1jet	Chrome	72840000	175.00
	Matt Black	72840670	228.00
	Stainless Steel Finish	72840800	228.00

NEW



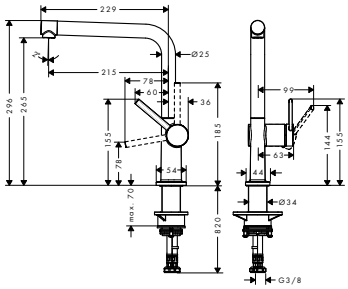

- ComfortZone 270
- swivel range adjustable in 4 steps 60°, 110°, 150° or 360°
- laminar spray
- connection dimension: DN15
- flow rate 8 l/ min
- ceramic cartridge
- connection type: G ⅜ connections
- integrated non-return valve
- suitable for continuous flow water heaters
- tap hole with Ø 35 mm required

Focus M41

Focus M41 Single lever kitchen mixer 240, pull-out spray, 2jet	Chrome	31815000	251.70
	Matt Black	31815670	352.30
	Stainless Steel Finish	31815800	327.40

NEW



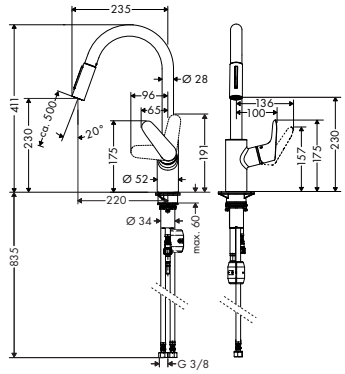

- ComfortZone 240
- swivel range adjustable in 2 steps to 110° or 150°
- laminar spray and shower spray
- lockable shower spray, spray returns through pressing spray diverter
- MagFit magnetic shower support
- quick connect shower hose
- connection dimension: DN15
- flow rate 9.5 l/ min
- ceramic cartridge
- connection type: G ⅜ connections
- integrated non-return valve
- suitable for continuous flow water heaters

Alternative products:

NEW

· Focus M41 Single lever kitchen mixer 240, Eco, pull-out spray, 2jet	Chrome	31833000	251.70

Measurements within scale drawings are in mm.

Technical specifications and units of measure are subject to change.

	finish	code no.	Euro
Focus M41 Single lever kitchen mixer 240, pull-out spray, 2jet, sBox	Chrome	73880000	300.20
	Stainless Steel Finish	73880800	373.60



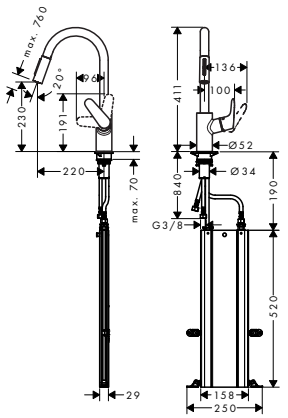

- consists of: single lever kitchen mixer, hose box
- ComfortZone 240
- swivel range adjustable in 2 steps to 110° or 150°
- laminar spray and shower spray
- lockable shower spray, spray returns through pressing spray diverter
- MagFit magnetic shower support
- connection dimension: DN15
- flow rate 9.5 l/min
- ceramic cartridge
- connection type: G ⅜ connections
- integrated non-return valve
- suitable for continuous flow water heaters
- sBox for quiet, smooth and protected hose guidance in the cabinet, under the countertop, with extension length up to 76 cm
- tap hole with Ø 35 mm required

Alternative products:

NEW
- Focus M41 Single lever kitchen mixer 240, Eco, pull-out spray, 2jet, sBox — Chrome — 73895000 — 300.20

Focus M41 Single lever kitchen mixer 280, 1jet **NEW**	Chrome	31817000	194.20
	Matt Black	31817670	271.40
	Stainless Steel Finish	31817800	252.90



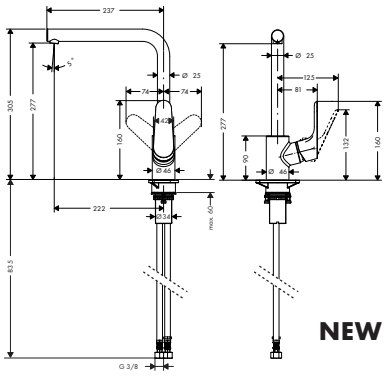

- ComfortZone 280
- swivel range adjustable in 3 steps 110°, 150° or 360°
- handle can be positioned on the right or left
- normal spray
- connection dimension: DN15
- flow rate 12 l/min
- ceramic cartridge
- connection type: G ⅜ connections
- suitable for continuous flow water heaters

Alternative products:

NEW
- Focus M41 Single lever kitchen mixer 280, Eco, 1jet — Chrome — 31827000 — 194.20

Focus M41 Single lever kitchen mixer 260, 1jet **NEW**	Chrome	31820000	169.40
	Matt Black	31820670	237.60
	Stainless Steel Finish	31820800	220.90



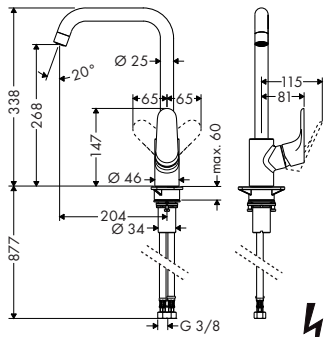

- ComfortZone 260
- swivel range adjustable in 3 steps 110°, 150° or 360°
- handle can be positioned on the right or left
- normal spray
- connection dimension: DN15
- flow rate 12 l/min
- ceramic cartridge
- connection type: G ⅜ connections
- suitable for continuous flow water heaters

Alternative products:

- Focus M41 Single lever kitchen mixer 260, LowPressure/vented hot water cylinders, 1jet — Chrome — 31822000 — 187.00

NEW
- Focus M41 Single lever kitchen mixer 260, Eco, 1jet — Chrome — 31821000 — 169.40
  Stainless Steel Finish — 31821800 — 220.90

Measurements within scale drawings are in mm.

Technical specifications and units of measure are subject to change.

	finish	code no.	Euro



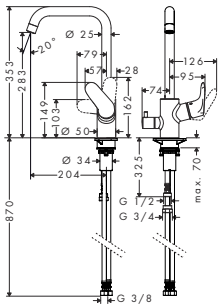

Focus M41 Single lever kitchen mixer 260, device shut-off valve, 1jet
- ComfortZone 260
- swivel range adjustable in 3 steps 110°, 150° or 360°
- handle can be positioned on the right or left
- normal spray
- with integrated shut-off valve
- connection dimension: DN15
- flow rate 12 l/min
- ceramic cartridge
- connection type: G ⅜ connections
- suitable for continuous flow water heaters

Chrome 31823000 277.50

Air Power · Quick Clean · Comfort Zone



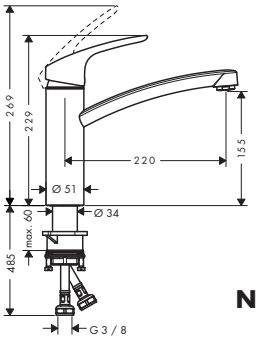

NEW

Focus M41 Single lever kitchen mixer 160, 1jet
- ComfortZone 160
- swivel range 360°
- normal spray
- connection dimension: DN15
- flow rate 12 l/min
- ceramic cartridge
- connection type: G ⅜ connections
- suitable for continuous flow water heaters

Chrome 31806000 119.50
Stainless Steel Finish 31806800 155.30

Air Power · Quick Clean · Comfort Zone

Alternative products:
- Focus M41 Single lever kitchen mixer 160, CoolStart, EcoSmart, 1jet — Chrome 31816000 123.30
- Focus M41 Single lever kitchen mixer 160, Eco, 1jet — Chrome 31826000 119.50
- Focus M41 Single lever kitchen mixer 160, LowPressure/vented hot water cylinders, 1jet — Chrome 31804000 134.80



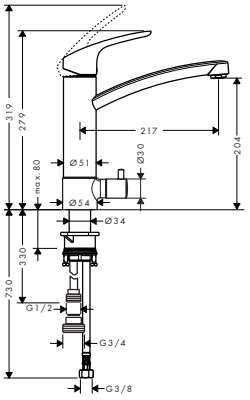

Focus M41 Single lever kitchen mixer 200, device shut-off valve, 1jet
- ComfortZone 200
- swivel range 120°
- with integrated shut-off valve
- connection dimension: DN15
- flow rate 12 l/min
- ceramic cartridge
- connection type: G ⅜ connections
- suitable for continuous flow water heaters

Chrome 31803000 277.40

Air Power · Quick Clean · Comfort Zone



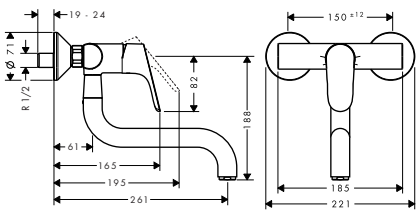

Focus M41 Single lever kitchen mixer, wall-mounted lowspout, 1jet
- swivel range 180°
- normal spray
- centre distance 150 ± 12 mm
- connection dimension: DN15
- flow rate 12 l/min
- ceramic cartridge
- connection type: s-shaped connections
- suitable for continuous flow water heaters

Chrome 31825000 161.20

Air Power · Quick Clean

Measurements within scale drawings are in mm.

Technical specifications and units of measure are subject to change.

	finish	code no.	Euro



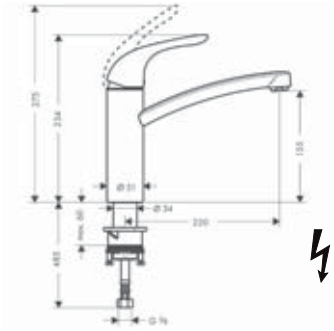

Focus M41 Single lever kitchen mixer E, 160, 1jet
- ComfortZone 160
- swivel range 360°
- normal spray
- connection dimension: DN15
- flow rate 12 l/min
- ceramic cartridge
- connection type: G ⅜ connections
- suitable for continuous flow water heaters

Chrome 31780000 125.60

Air Power · Quick Clean · Comfort Zone

Alternative products:
- Focus M41 Single lever kitchen mixer E, 160, LowPressure/vented hot water cylinders, 1jet

Chrome 31784000 147.40

Focus M42



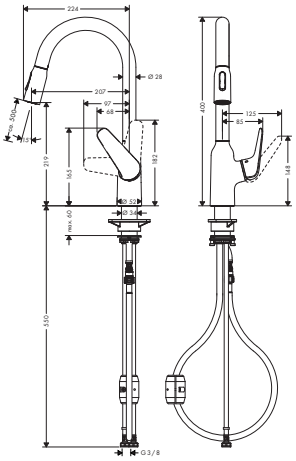

Focus M42 Single lever kitchen mixer 220, pull-out spray, 2jet
- ComfortZone 220
- swivel range 360°
- laminar spray and shower spray
- lockable shower spray, spray returns through pressing spray diverter and spray returns automatically through handle closing
- MagFit magnetic shower support
- quick connect shower hose
- connection dimension: DN15
- flow rate 8 l/min
- ceramic cartridge
- connection type: G ⅜ connections
- integrated non-return valve
- suitable for continuous flow water heaters
- tap hole with Ø 35 mm required

Chrome 71800000 266.20
Stainless Steel Finish 71800800 346.10

Quick Clean · Comfort Zone



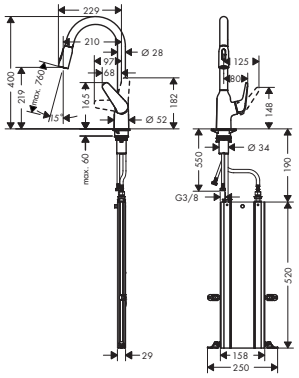

Focus M42 Single lever kitchen mixer 220, pull-out spray, 2jet, sBox
- consists of: single lever kitchen mixer, hose box
- ComfortZone 220
- swivel range 360°
- laminar spray and shower spray
- lockable shower spray, spray returns through pressing spray diverter and spray returns automatically through handle closing
- MagFit magnetic shower support
- quick connect shower hose
- connection dimension: DN15
- flow rate 8 l/min
- ceramic cartridge
- connection type: G ⅜ connections
- integrated non-return valve
- suitable for continuous flow water heaters
- sBox for quiet, smooth and protected hose guidance in the cabinet, under the countertop, with extension length up to 76 cm
- tap hole with Ø 35 mm required

Chrome 71820000 319.50
Stainless Steel Finish 71820800 399.40

Quick Clean · Comfort Zone

Measurements within scale drawings are in mm.

Technical specifications and units of measure are subject to change.

	finish	code no.	Euro



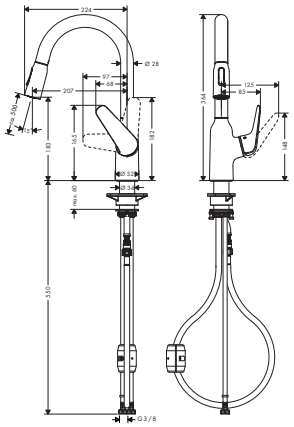

Focus M42 Single lever kitchen mixer 180, pull-out spray, 2jet
- ComfortZone 180
- swivel range 360°
- laminar spray and shower spray
- lockable shower spray, spray returns through pressing spray diverter and spray returns automatically through handle closing
- MagFit magnetic shower support
- quick connect shower hose
- connection dimension: DN15
- flow rate 8 l/min
- ceramic cartridge
- connection type: G ⅜ connections
- integrated non-return valve
- suitable for continuous flow water heaters
- tap hole with Ø 35 mm required

Chrome	71801000	235.50
Stainless Steel Finish	71801800	306.20

Quick Clean · Comfort Zone

Alternative products:

NEW
- Focus M42 Single lever kitchen mixer 180, Eco, pull-out spray, 2jet

Chrome	71862000	235.50



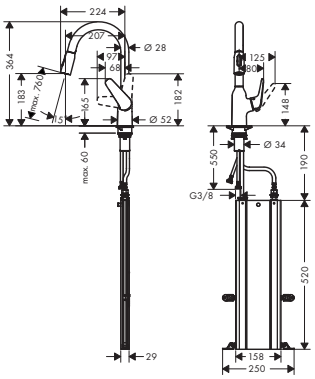

Focus M42 Single lever kitchen mixer 180, pull-out spray, 2jet, sBox
- consists of: single lever kitchen mixer, hose box
- ComfortZone 180
- swivel range 360°
- laminar spray and shower spray
- lockable shower spray, spray returns through pressing spray diverter and spray returns automatically through handle closing
- MagFit magnetic shower support
- quick connect shower hose
- connection dimension: DN15
- flow rate 8 l/min
- ceramic cartridge
- connection type: G ⅜ connections
- integrated non-return valve
- suitable for continuous flow water heaters
- sBox for quiet, smooth and protected hose guidance in the cabinet, under the countertop, with extension length up to 76 cm
- tap hole with Ø 35 mm required

Chrome	71821000	288.80
Stainless Steel Finish	71821800	359.40

Quick Clean · Comfort Zone



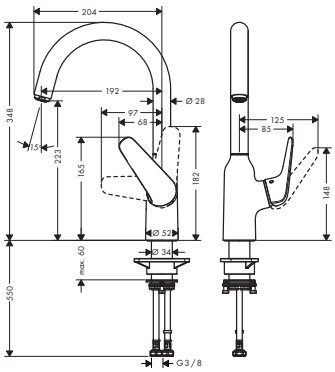

Focus M42 Single lever kitchen mixer 220, 1jet
- ComfortZone 220
- swivel range 360°
- normal spray
- connection dimension: DN15
- flow rate 10 l/min
- ceramic cartridge
- connection type: G ⅜ connections
- suitable for continuous flow water heaters
- tap hole with Ø 35 mm required

Chrome	71802000	169.00
Stainless Steel Finish	71802800	219.70

Air Power · Quick Clean · Comfort Zone

Measurements within scale drawings are in mm.

Technical specifications and units of measure are subject to change.

	finish	code no.	Euro



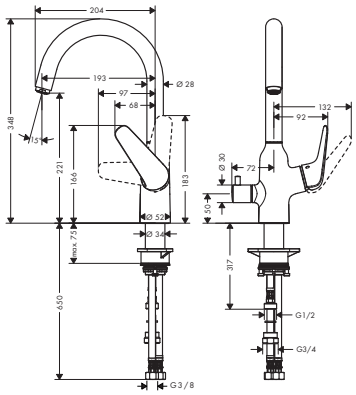

Focus M42 Single lever kitchen mixer 220, device shut-off valve, 1jet
- ComfortZone 220
- swivel range adjustable in 2 steps 110° or 360°
- normal spray
- with integrated shut-off valve
- connection dimension: DN15
- flow rate 10 l/ min
- ceramic cartridge
- connection type: G ⅜ connections
- suitable for continuous flow water heaters
- tap hole with Ø 35 mm required

Chrome 71803000 266.20

Air Power · Quick Clean · Comfort Zone



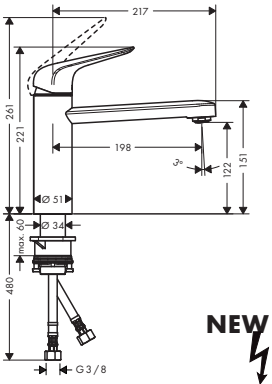

NEW

Focus M42 Single lever kitchen mixer 120, 1jet
- ComfortZone 120
- swivel range 360°
- normal spray
- connection dimension: DN15
- flow rate 12 l/ min
- ceramic cartridge
- connection type: G ⅜ connections
- suitable for continuous flow water heaters
- tap hole with Ø 35 mm required

Chrome 71806000 122.90
Stainless Steel Finish 71806800 159.70

Air Power · Quick Clean · Comfort Zone

Alternative products:
- Focus M42 Single lever kitchen mixer 120, CoolStart, EcoSmart, 1jet — Chrome 71805000 122.90
- Focus M42 Single lever kitchen mixer 120, CoolStart, Eco, 1jet — Chrome 71864000 122.90
- Focus M42 Single lever kitchen mixer 120, LowPressure/vented hot water cylinders, 1jet — Chrome 71804000 133.10



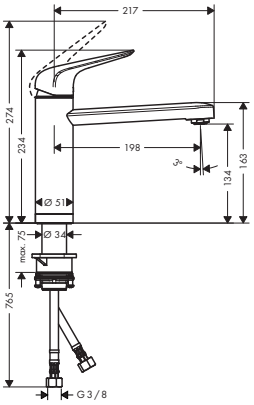

Focus M42 Single lever kitchen mixer 120, installation in front of a window, 1jet
- ComfortZone 120
- swivel range 360°
- installation in front of the window, can be laid flat, base height 51 mm
- normal spray
- connection dimension: DN15
- flow rate 12 l/ min
- ceramic cartridge
- connection type: G ⅜ connections
- suitable for continuous flow water heaters
- tap hole with Ø 35 mm required

Chrome 71807000 153.60

Air Power · Quick Clean · Comfort Zone

Measurements within scale drawings are in mm.

Technical specifications and units of measure are subject to change.

	finish	code no.	Euro



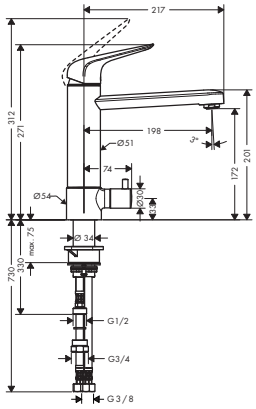

Focus M42 Single lever kitchen mixer 180, device shut-off valve, 1jet
- ComfortZone 180
- swivel range adjustable in 2 steps 110° or 360°
- normal spray
- with integrated shut-off valve
- connection dimension: DN15
- flow rate 12 l/min
- ceramic cartridge
- connection type: G ⅜ connections
- suitable for continuous flow water heaters
- tap hole with Ø 35 mm required

Chrome 71813000 250.90

Air Power · Quick Clean · Comfort Zone



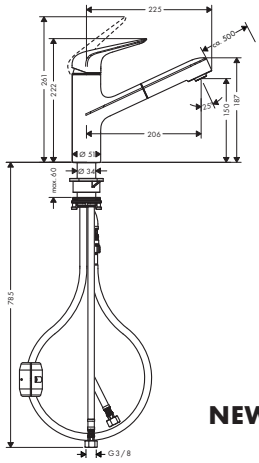

NEW

Focus M42 Single lever kitchen mixer 150, pull-out spout, 1jet
- ComfortZone 150
- swivel range 120°
- normal spray
- MagFit magnetic shower support
- quick connect shower hose
- connection dimension: DN15
- flow rate 10 l/min
- ceramic cartridge
- connection type: G ⅜ connections
- integrated non-return valve
- suitable for continuous flow water heaters
- tap hole with Ø 35 mm required

Chrome 71814000 169.00
Stainless Steel Finish 71814800 219.70

Air Power · Quick Clean · Comfort Zone

Alternative products:
- Focus M42 Single lever kitchen mixer 150, Eco, pull-out spout, 1jet

Chrome 71865000 169.00



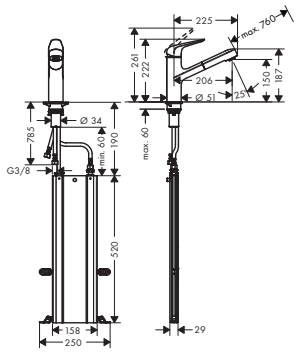

Focus M42 Single lever kitchen mixer 150, pull-out spout, 1jet, sBox
- consists of: single lever kitchen mixer, hose box
- ComfortZone 150
- swivel range 120°
- normal spray
- MagFit magnetic shower support
- quick connect shower hose
- connection dimension: DN15
- flow rate 10 l/min
- ceramic cartridge
- connection type: G ⅜ connections
- integrated non-return valve
- suitable for continuous flow water heaters
- sBox for quiet, smooth and protected hose guidance in the cabinet, under the countertop, with extension length up to 76 cm
- tap hole with Ø 35 mm required

Chrome 71829000 222.20
Stainless Steel Finish 71829800 272.90

Air Power · Quick Clean · Comfort Zone

Measurements within scale drawings are in mm.

Technical specifications and units of measure are subject to change.

	finish	code no.	Euro



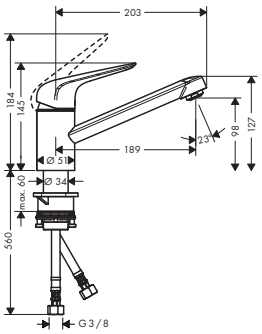

Focus M42 Single lever kitchen mixer 100, 1jet
- ComfortZone 100
- swivel range 360°
- normal spray
- connection dimension: DN15
- flow rate 12 l/ min
- ceramic cartridge
- connection type: G ⅜ connections
- suitable for continuous flow water heaters
- tap hole with Ø 35 mm required

Air Power · Quick Clean · Comfort Zone

	Chrome	71808000	102.40
	Stainless Steel Finish	71808800	133.10

Alternative products:

· Focus M42 Single lever kitchen mixer 100, CoolStart, EcoSmart, 1jet	Chrome	71809000	102.40
NEW · Focus M42 Single lever kitchen mixer 100, CoolStart, Eco, 1jet	Chrome	71866000	102.40

Logis M31



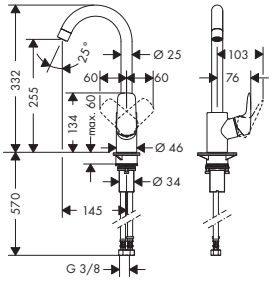

Logis M31 Single lever kitchen mixer 260, 1jet
- ComfortZone 260
- swivel range adjustable in 3 steps 110°, 150° or 360°
- handle can be positioned on the right or left
- normal spray
- connection dimension: DN15
- flow rate 12 l/ min
- ceramic cartridge
- connection type: G ⅜ connections
- suitable for continuous flow water heaters

Air Power · Comfort Zone

	Chrome	71835000	137.20

Alternative products:

NEW · Logis M31 Single lever kitchen mixer 260, Eco, 1jet	Chrome	71861000	137.20



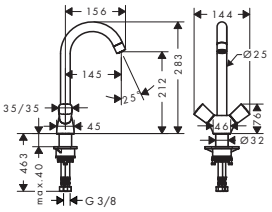

Logis M31 2-handle kitchen mixer 220, 1jet
- ComfortZone 220
- swivel range adjustable in 3 steps 110°, 150° or 360°
- normal spray
- connection dimension: DN15
- flow rate 12 l/ min
- ceramic valves hot/ cold 90°
- connection type: G ⅜ connections
- suitable for continuous flow water heaters

Air Power · Comfort Zone

	Chrome	71280000	120.30



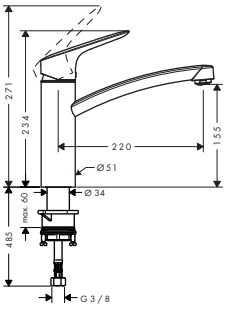

Logis M31 Single lever kitchen mixer 160, 1jet
- ComfortZone 160
- swivel range 360°
- normal spray
- connection dimension: DN15
- flow rate 12 l/ min
- ceramic cartridge
- connection type: G ⅜ connections
- suitable for continuous flow water heaters

Air Power · Comfort Zone

	Chrome	71832000	106.30

Alternative products:

· Logis M31 Single lever kitchen mixer 160, installation in front of a window, 1jet	Chrome	71833000	136.20
NEW · Logis M31 Single lever kitchen mixer 160, Eco, 1jet	Chrome	71860000	106.30

Measurements within scale drawings are in mm.

Technical specifications and units of measure are subject to change.

		finish	code no.	Euro
	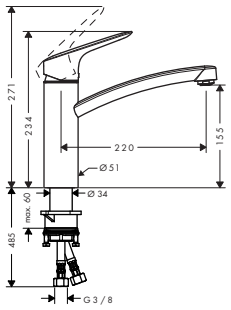	**Logis M31 Single lever kitchen mixer 160, CoolStart, EcoSmart, 1jet** · ComfortZone 160 · cold water in middle position · swivel range 360° · normal spray · connection dimension: DN15 · flow rate 12 l/min · ceramic cartridge · connection type: G ⅜ connections · suitable for continuous flow water heaters	Chrome	71839000	106.30
	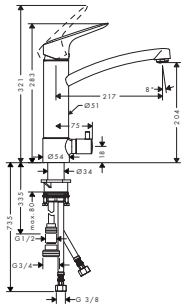	**Logis M31 Single lever kitchen mixer 220, device shut-off valve, 1jet** · ComfortZone 220 · swivel range 120° · normal spray · connection dimension: DN15 · flow rate 12 l/min · ceramic cartridge · connection type: G ⅜ connections · suitable for continuous flow water heaters	Chrome	71834000	244.50
	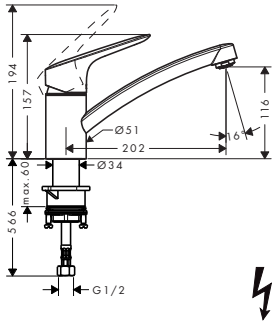	**Logis M31 Single lever kitchen mixer 120, 1jet** · ComfortZone 120 · swivel range 360° · normal spray · connection dimension: DN15 · flow rate 12 l/min · ceramic cartridge · connection type: G ⅜ connections · suitable for continuous flow water heaters	Chrome	71830000	93.50
		Alternative products: · Logis M31 Single lever kitchen mixer 120, LowPressure/vented hot water cylinders, 1jet	Chrome	71831000	111.70
	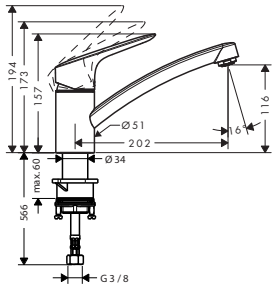	**Logis M31 Single lever kitchen mixer 120, CoolStart, EcoSmart, 1jet** · ComfortZone 120 · cold water in middle position · swivel range 360° · normal spray · connection dimension: DN15 · flow rate 12 l/min · ceramic cartridge · connection type: G ⅜ connections · suitable for continuous flow water heaters	Chrome	71837000	93.50
	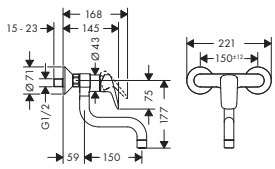	**Logis M31 Single lever kitchen mixer, wall-mounted lowspout, 1jet** · swivel range 220° · normal spray · centre distance 150 ± 12 mm · connection dimension: DN15 · flow rate 13 l/min · ceramic cartridge · connection type: s-shaped connections · suitable for continuous flow water heaters	Chrome	71836000	137.20

Measurements within scale drawings are in mm.

Technical specifications and units of measure are subject to change.

Logis M32

	finish	code no.	Euro



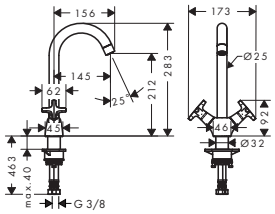

Logis M32 2-handle kitchen mixer 220, 1jet
· ComfortZone 220
· swivel range adjustable in 3 steps 110°, 150° or 360°
· normal spray
· connection dimension: DN15
· flow rate 12 l/ min
· ceramic valves 90°
· connection type: G ⅜ connections
· suitable for continuous flow water heaters

Chrome | 71285000 | 153.20

Air Power | Comfort Zone

Alternative products:

NEW

· Logis M32 2-handle kitchen mixer 220, Eco, 1jet — Chrome | 71283000 | 153.20



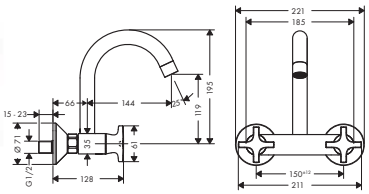

Logis M32 2-handle kitchen mixer, wall-mounted, highspout, 1jet
· swivel range 360°
· normal spray
· centre distance 150 ± 12 mm
· connection dimension: DN15
· flow rate 12 l/ min
· ceramic valves 90°
· connection type: s-shaped connections
· suitable for continuous flow water heaters

Chrome | 71286000 | 180.50

Air Power

Alternative products:

NEW

· Logis M32 2-handle kitchen mixer, Eco, wall-mounted highspout, 1jet — Chrome | 71284000 | 180.50



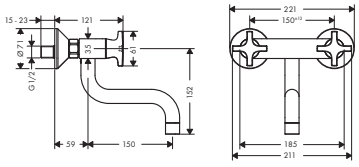

Logis M32 2-handle kitchen mixer, wall-mounted lowspout, 1jet
· normal spray
· centre distance 150 ± 12 mm
· connection dimension: DN15
· flow rate 12 l/ min
· ceramic valves 90°
· connection type: s-shaped connections
· suitable for continuous flow water heaters

Chrome | 71287000 | 180.50

Air Power

Measurements within scale drawings are in mm.

hansgrohe sink combis

The C71 sink combinations at a glance

For the kitchen mixers, there is a choice between the version with the Select button and the version with the tilt lever. Both models are available in chrome (-000) or stainless steel finish (-800) and both combine beautifully with the sink to create a perfect unit. The combination unit contains all the other necessary components. This makes the ordering and planning process so much easier as the complete unit has the same item number.

60 cm



C71-F450-01
Select sink combi 450 with
2-hole kitchen mixer 220
43207, -000, -800



C71-F450-02
Select sink combi 450 drainer with
2-hole kitchen mixer 220
43208, -000, -800
C71-F450-11 (Drainer right, not shown)
43229, -000, -800

60 cm



C71-F450-06
Sink combi 450 with
2-hole Select kitchen mixer 200
43201, -000, -800



C71-F450-07
Sink combi 450 drainer with
2-hole Select kitchen mixer 200
43205, -000, -800
C71-F450-12 (Drainer right, not shown)
43230, -000, -800

Installation options

All our basins can be integrated flush in the worktop or surface mounted from above.

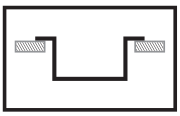

Surface-mounted installation

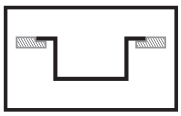

Flush-mounted installation

60 cm / 80 cm / 90 cm

Base cabinet

80 cm



C71-F660-03
Select sink combi 660 with
2-hole kitchen mixer 320
43209, -000, -800



C71-F655-04
Select sink combi 180/450
with 2-hole kitchen mixer 320
43210, -000, -800

90 cm



C71-F765-05
Select sink combi 370/370 with
2-hole kitchen mixer 320
43211, -000, -800

80 cm



C71-F660-08
Sink combi 660 with
2-hole Select kitchen mixer 200
43202, -000, -800



C71-F655-09
Sink combi 180/450 with
2-hole Select kitchen mixer 200
43206, -000, -800

90 cm



C71-F765-10
Sink combi 370/370 with
2-hole Select kitchen mixer 200
43203, -000, -800

hansgrohe Sink combis

The C51 sink combinations at a glance

Any existing sink size can be chosen to go with the combination units with graphite black SilicaTec sinks with the sink top-mounted in the worktop. With the kitchen mixers, there is the choice between the version with the Select button and the version with the tilt lever. Both models are available in chrome (-000) and both combine beautifully with the sink to create a perfect unit. The combination unit contains all the other necessary components. This makes the ordering and planning process easier as the complete unit has the same item number.

60 cm



C51-F450-01
Select sink combi 450 with
2-hole kitchen mixer 220
43212, -000



C51-F450-03
Select sink combi 450 drainer with
2-hole kitchen mixer 220
43214, -000
C51-F450-11 (Drainer right, not shown)
43227, -000

60 cm



C51-F450-06
Sink combi 450 with
2-hole Select kitchen mixer 200
43217, -000



C51-F450-08
Sink combi 450 drainer with
2-hole Select kitchen mixer 200
43219, -000
C51-F450-12 (Drainer right, not shown)
43228, -000

Installation options
All the sinks can be top-mounted.

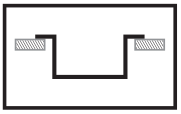

Surface-mounted installation

60 cm / 80 cm / 90 cm

Base cabinet

80 cm



C51-F660-02
Select sink combi 660 with
2-hole kitchen mixer 320
43213, -000



C51-F635-04
Select sink combi 180/450 with
2-hole kitchen mixer 320
43215, -000

90 cm



C51-F770-5
Select sink combi 370/370 with
2-hole kitchen mixer 320
43216, -000

80 cm



C51-F660-07
Sink combi 660 with
2-hole Select kitchen mixer 200
43218, -000



C51-F635-09
Sink combi 180/450 with
2-hole Select kitchen mixer 200
43220, -000

90 cm



C51-F770-10
Sink combi 370/370 with
2-hole Select kitchen mixer 200
43221, -000

Stainless steel sink combis



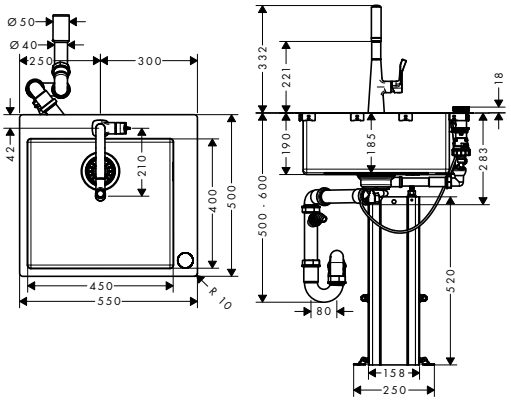

	finish	code no.	Euro
C71-F450-01 sink combi 450 Select	Chrome	43207000	1,138.00
	Stainless Steel Finish	43207800	1,302.30

Select · Quick Clean · Comfort Zone

- consists of: built-in sink, 2-hole single lever kitchen mixer, control unit, hose box, automatic waste and overflow set
- material sink: stainless steel
- number of bowls: 1 main bowl
- tap hole and hole for control unit are pre-drilled
- sink depth: 190 mm
- cut-out dimensions: 530 x 480 mm
- cabinet size: 60 cm
- type of installation: flat on the countertop (self-rimming) or flush-mount installation
- position overflow: on the right side of the bowl
- tap ledge reinforcing for a tight and stable seating of the kitchen mixer
- corner radius: 10 mm
- connection type: G ⅜ connections
- connection dimension: DN15
- flow rate 7 l/ min
- suitable for continuous flow water heaters
- ceramic cartridge
- MagFit magnetic shower support
- integrated non-return valve
- swivel range adjustable in 2 steps to 110° or 150°
- laminar spray and shower spray
- ComfortZone 220
- lockable shower spray, spray returns automatically through handle closing
- sBox for quiet, smooth and protected hose guidance in the cabinet, under the countertop, with extension length up to 76 cm
- push of control unit: intuitive start and stop function of the water flow, turn: automatic drain operation

Optional parts:

· F15 Cutting board walnut		40960000	122.90
· F16 Cutting board oak		40961000	92.20
NEW · F17 Mobile drainboard	Stainless Steel	40962800	80.00
NEW · F14 Multifunctional strainer	Matt Black	40963000	20.00

Measurements within scale drawings are in mm.

Technical specifications and units of measure are subject to change.



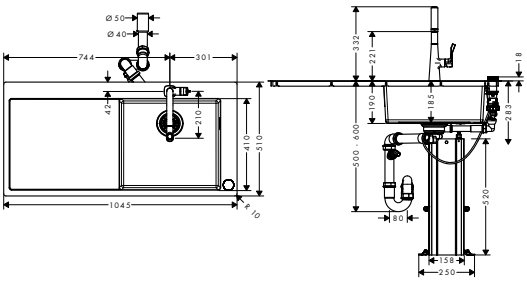

		finish	code no.	Euro
	C71-F450-02 Sink combi 450 Select with drainboard · consists of: built-in sink, 2-hole single lever kitchen mixer, control unit, hose box, automatic waste and overflow set · for installation in worktops from 25 mm · material sink: stainless steel · number of bowls: 1 main bowl · with drainage · tap hole and hole for control unit are pre-drilled · orientation: bowl right · sink depth: 190 mm · cut-out dimensions: 1025 x 490 mm · cabinet size: 60 cm · type of installation: flat on the countertop (self-rimming) or flush-mount installation · position overflow: on the right side of the bowl · tap ledge reinforcing for a tight and stable seating of the kitchen mixer · corner radius: 10 mm · connection type: G ⅜ connections · connection dimension: DN15 · flow rate 7 l/ min · suitable for continuous flow water heaters · ceramic cartridge · MagFit magnetic shower support · integrated non-return valve · swivel range adjustable in 2 steps to 110° or 150° · laminar spray and shower spray · ComfortZone 220 · lockable shower spray, spray returns automatically through handle closing · sBox for quiet, smooth and protected hose guidance in the cabinet, under the countertop, with extension length up to 76 cm · push of control unit: intuitive start and stop function of the water flow, turn: automatic drain operation	Chrome Stainless Steel Finish	43208000 43208800	1,372.20 1,531.90
NEW	**Optional parts:** · F14 Multifunctional strainer	Matt Black	40963000	20.00

Measurements within scale drawings are in mm.

Technical specifications and units of measure are subject to change.



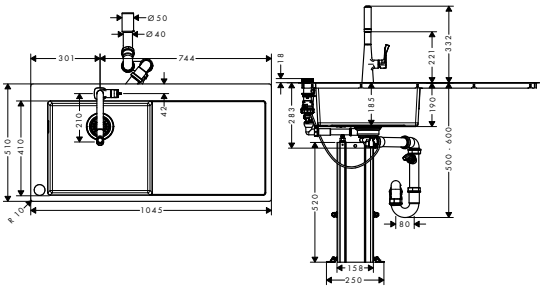

		finish	code no.	Euro
	C71-F450-11 sink combi 450 Select with drainboard · consists of: built-in sink, 2-hole single lever kitchen mixer, control unit, hose box, automatic waste and overflow set · for installation in worktops from 25 mm · material sink: stainless steel · number of bowls: 1 main bowl · with drainage · tap hole and hole for control unit are pre-drilled · orientation: bowl left · sink depth: 190 mm · cut-out dimensions: 1025 x 490 mm · cabinet size: 60 cm · type of installation: flat on the countertop (self-rimming) or flush-mount installation · position overflow: on the left side of the bowl · tap ledge reinforcing for a tight and stable seating of the kitchen mixer · corner radius: 10 mm · connection type: G ⅜ connections · connection dimension: DN15 · flow rate 7 l/ min · suitable for continuous flow water heaters · ceramic cartridge · MagFit magnetic shower support · integrated non-return valve · swivel range adjustable in 2 steps to 110° or 150° · laminar spray and shower spray · ComfortZone 220 · lockable shower spray, spray returns automatically through handle closing · sBox for quiet, smooth and protected hose guidance in the cabinet, under the countertop, with extension length up to 76 cm · push of control unit: intuitive start and stop function of the water flow, turn: automatic drain operation	Chrome Stainless Steel Finish	43229000 43229800	1,372.20 1,531.90
	Optional parts:			
NEW	· F14 Multifunctional strainer	Matt Black	40963000	20.00

Measurements within scale drawings are in mm.

Technical specifications and units of measure are subject to change.



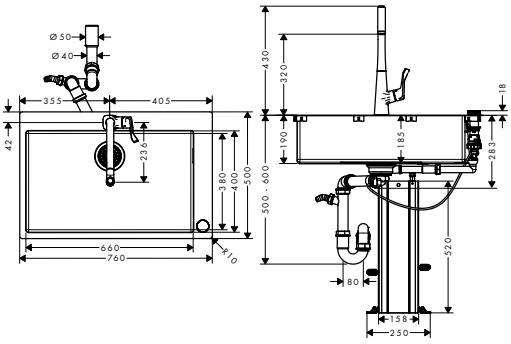

	finish	code no.	Euro
C71-F660-03 Sink combi 660 Select	Chrome	43209000	1,232.80
	Stainless Steel Finish	43209800	1,409.80

Select · Quick Clean · Comfort Zone

- consists of: built-in sink, 2-hole single lever kitchen mixer, control unit, hose box, automatic waste and overflow set
- material sink: stainless steel
- number of bowls: 1 main bowl
- tap hole and hole for control unit are pre-drilled
- sink depth: 190 mm
- cut-out dimensions: 740 x 480 mm
- cabinet size: 80 cm
- type of installation: flat on the countertop (self-rimming) or flush-mount installation
- position overflow: on the right side of the bowl
- tap ledge reinforcing for a tight and stable seating of the kitchen mixer
- corner radius: 10 mm
- connection type: G ⅜ connections
- connection dimension: DN15
- flow rate 7 l/ min
- suitable for continuous flow water heaters
- ceramic cartridge
- MagFit magnetic shower support
- integrated non-return valve
- swivel range adjustable in 2 steps to 110° or 150°
- laminar spray and shower spray
- ComfortZone 320
- lockable shower spray, spray returns automatically through handle closing
- sBox for quiet, smooth and protected hose guidance in the cabinet, under the countertop, with extension length up to 76 cm
- push of control unit: intuitive start and stop function of the water flow, turn: automatic drain operation

Optional parts:

· F15 Cutting board walnut		40960000	122.90
· F16 Cutting board oak		40961000	92.20
NEW · F17 Mobile drainboard	Stainless Steel	40962800	80.00
NEW · F14 Multifunctional strainer	Matt Black	40963000	20.00

Measurements within scale drawings are in mm.

Technical specifications and units of measure are subject to change.



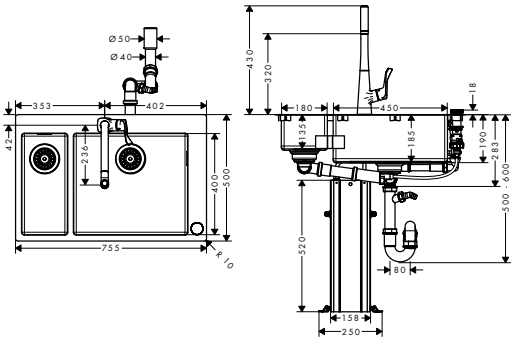

		finish	code no.	Euro
	C71-F655-04 Sink combi 180/450 Select	Chrome	43210000	1,580.50
		Stainless Steel Finish	43210800	1,757.60

Select · Quick Clean · Comfort Zone

- consists of: built-in sink, 2-hole single lever kitchen mixer, control unit, hose box, automatic waste and overflow set
- material sink: stainless steel
- number of bowls: 1 main bowl and 1 additional bowl
- tap hole and hole for control unit are pre-drilled
- sink depth: 190 mm
- cut-out dimensions: 735 x 480 mm
- cabinet size: 80 cm
- type of installation: flat on the countertop (self-rimming) or flush-mount installation
- position overflow: on the right side of the main bowl
- tap ledge reinforcing for a tight and stable seating of the kitchen mixer
- corner radius: 10 mm
- connection type: G ⅜ connections
- connection dimension: DN15
- flow rate 7 l/ min
- suitable for continuous flow water heaters
- ceramic cartridge
- MagFit magnetic shower support
- integrated non-return valve
- swivel range adjustable in 2 steps to 110° or 150°
- laminar spray and shower spray
- ComfortZone 320
- lockable shower spray, spray returns automatically through handle closing
- sBox for quiet, smooth and protected hose guidance in the cabinet, under the countertop, with extension length up to 76 cm
- push of control unit: intuitive start and stop function of the water flow, turn: automatic drain operation

Optional parts:

· F15 Cutting board walnut		40960000	122.90
· F16 Cutting board oak		40961000	92.20
NEW · F17 Mobile drainboard	Stainless Steel	40962800	80.00
NEW · F14 Multifunctional strainer	Matt Black	40963000	20.00

Measurements within scale drawings are in mm.

Technical specifications and units of measure are subject to change.



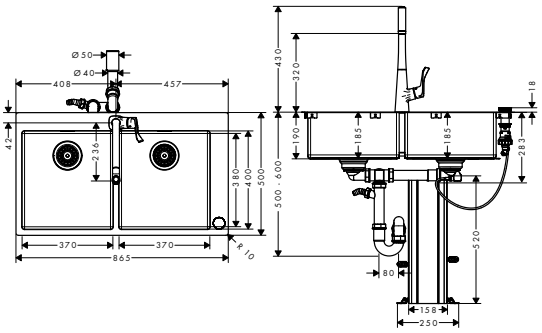

	finish	code no.	Euro
C71-F765-05 Sink combi 370/370 Select	Chrome	43211000	1,685.90
	Stainless Steel Finish	43211800	1,863.00

Select · Quick Clean · Comfort Zone

- consists of: built-in sink, 2-hole single lever kitchen mixer, control unit, hose box, automatic waste and overflow set
- material sink: stainless steel
- number of bowls: 2 main bowls
- tap hole and hole for control unit are pre-drilled
- sink depth: 190 mm
- cut-out dimensions: 845 x 480 mm
- cabinet size: 90 cm
- type of installation: flat on the countertop (self-rimming) or flush-mount installation
- tap ledge reinforcing for a tight and stable seating of the kitchen mixer
- corner radius: 10 mm
- connection type: G ⅜ connections
- connection dimension: DN15
- flow rate 7 l/ min
- suitable for continuous flow water heaters
- ceramic cartridge
- MagFit magnetic shower support
- integrated non-return valve
- swivel range adjustable in 2 steps to 110° or 150°
- laminar spray and shower spray
- ComfortZone 320
- lockable shower spray, spray returns automatically through handle closing
- sBox for quiet, smooth and protected hose guidance in the cabinet, under the countertop, with extension length up to 76 cm
- push of control unit: intuitive start and stop function of the water flow, turn: automatic drain operation

Optional parts:

· F15 Cutting board walnut		40960000	122.90
· F16 Cutting board oak		40961000	92.20
NEW · F17 Mobile drainboard	Stainless Steel	40962800	80.00
NEW · F14 Multifunctional strainer	Matt Black	40963000	20.00

Measurements within scale drawings are in mm.

Technical specifications and units of measure are subject to change.



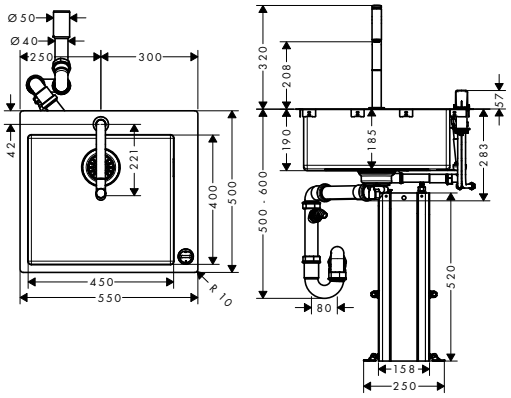

	finish	code no.	Euro
C71-F450-06 Sink combi 450	Chrome	43201000	1,053.70
· consists of: built-in sink, 2-hole single lever kitchen mixer, control unit, hose box, manual waste and overflow set	Stainless Steel Finish	43201800	1,211.80
· material sink: stainless steel			
· number of bowls: 1 main bowl			
· tap hole and hole for control unit are pre-drilled			
· sink depth: 190 mm			
· cut-out dimensions: 530 x 480 mm			
· cabinet size: 60 cm			
· type of installation: flat on the countertop (self-rimming) or flush-mount installation			
· position overflow: on the right side of the bowl			
· tap ledge reinforcing for a tight and stable seating of the kitchen mixer			
· corner radius: 10 mm			
· connection type: G ⅜ connections			
· connection dimension: DN15			
· flow rate 8 l/ min			
· suitable for continuous flow water heaters			
· ceramic cartridge			
· MagFit magnetic shower support			
· integrated non-return valve			
· swivel range 150°			
· normal spray			
· ComfortZone 200			
· Select button for a comfortable start/stop of the water flow			
· sBox for quiet, smooth and protected hose guidance in the cabinet, under the countertop, with extension length up to 76 cm			
Optional parts:			
· F15 Cutting board walnut		40960000	122.90
· F16 Cutting board oak		40961000	92.20
NEW · F17 Mobile drainboard	Stainless Steel	40962800	80.00
NEW · F14 Multifunctional strainer	Matt Black	40963000	20.00

Measurements within scale drawings are in mm.

Technical specifications and units of measure are subject to change.



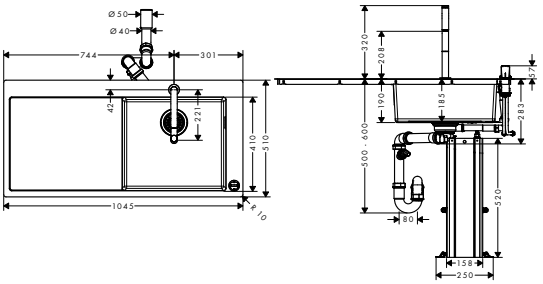

	finish	code no.	Euro
C71-F450-07 Sink combi 450 with drainboard	Chrome	43205000	1,331.20
	Stainless Steel Finish	43205800	1,484.80

Select · Air Power · Quick Clean · Comfort Zone

- consists of: built-in sink, 2-hole single lever kitchen mixer, control unit, hose box, manual waste and overflow set
- for installation in worktops from 25 mm
- material sink: stainless steel
- number of bowls: 1 main bowl
- with drainage
- tap hole and hole for control unit are pre-drilled
- orientation: bowl right
- sink depth: 190 mm
- cut-out dimensions: 1025 x 490 mm
- cabinet size: 60 cm
- type of installation: flat on the countertop (self-rimming) or flush-mount installation
- position overflow: on the right side of the bowl
- tap ledge reinforcing for a tight and stable seating of the kitchen mixer
- corner radius: 10 mm
- connection type: G ⅜ connections
- connection dimension: DN15
- flow rate 8 l/ min
- suitable for continuous flow water heaters
- ceramic cartridge
- MagFit magnetic shower support
- integrated non-return valve
- swivel range 150°
- normal spray
- ComfortZone 200
- Select button for a comfortable start/stop of the water flow
- sBox for quiet, smooth and protected hose guidance in the cabinet, under the countertop, with extension length up to 76 cm

Optional parts:

NEW	· F14 Multifunctional strainer	Matt Black	40963000	20.00

Measurements within scale drawings are in mm.

Technical specifications and units of measure are subject to change.



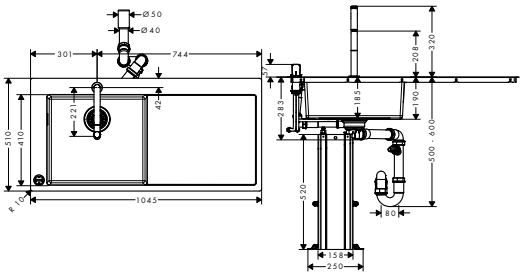

		finish	code no.	Euro
	C71-F450-12 Sink combi 450 with drainboard · consists of: built-in sink, 2-hole single lever kitchen mixer, control unit, hose box, manual waste and overflow set · for installation in worktops from 25 mm · material sink: stainless steel · number of bowls: 1 main bowl · with drainage · tap hole and hole for control unit are pre-drilled · orientation: bowl left · sink depth: 190 mm · cut-out dimensions: 1025 x 490 mm · cabinet size: 60 cm · type of installation: flat on the countertop (self-rimming) or flush-mount installation · position overflow: on the left side of the bowl · tap ledge reinforcing for a tight and stable seating of the kitchen mixer · corner radius: 10 mm · connection type: G ⅜ connections · connection dimension: DN15 · flow rate 8 l/ min · suitable for continuous flow water heaters · ceramic cartridge · MagFit magnetic shower support · integrated non-return valve · swivel range 150° · normal spray · ComfortZone 200 · Select button for a comfortable start/stop of the water flow · sBox for quiet, smooth and protected hose guidance in the cabinet, under the countertop, with extension length up to 76 cm	Chrome Stainless Steel Finish	43230000 43230800	1,331.20 1,484.80
NEW	**Optional parts:** · F14 Multifunctional strainer	Matt Black	40963000	20.00

Measurements within scale drawings are in mm.

Technical specifications and units of measure are subject to change.



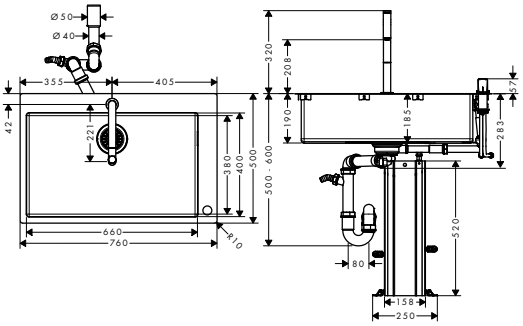

		finish	code no.	Euro
	C71-F660-08 Sink combi 660	Chrome	43202000	1,138.00
	· consists of: built-in sink, 2-hole single lever kitchen mixer, control unit, hose box, manual waste and overflow set	Stainless Steel Finish	43202800	1,296.10
	· material sink: stainless steel			
	· number of bowls: 1 main bowl			
	· tap hole and hole for control unit are pre-drilled			
	· sink depth: 190 mm			
	· cut-out dimensions: 740 x 480 mm			
	· cabinet size: 80 cm			
	· type of installation: flat on the countertop (self-rimming) or flush-mount installation			
	· position overflow: on the right side of the bowl			
	· tap ledge reinforcing for a tight and stable seating of the kitchen mixer			
	· corner radius: 10 mm			
	· connection type: G ⅜ connections			
	· connection dimension: DN15			
	· flow rate 8 l/ min			
	· suitable for continuous flow water heaters			
	· ceramic cartridge			
	· MagFit magnetic shower support			
	· integrated non-return valve			
	· swivel range 150°			
	· normal spray			
	· ComfortZone 200			
	· Select button for a comfortable start/stop of the water flow			
	· sBox for quiet, smooth and protected hose guidance in the cabinet, under the countertop, with extension length up to 76 cm			
	Optional parts:			
	· F15 Cutting board walnut		40960000	122.90
	· F16 Cutting board oak		40961000	92.20
NEW	· F17 Mobile drainboard	Stainless Steel	40962800	80.00
NEW	· F14 Multifunctional strainer	Matt Black	40963000	20.00

Select · Air Power · Quick Clean · Comfort Zone

Measurements within scale drawings are in mm.

Technical specifications and units of measure are subject to change.



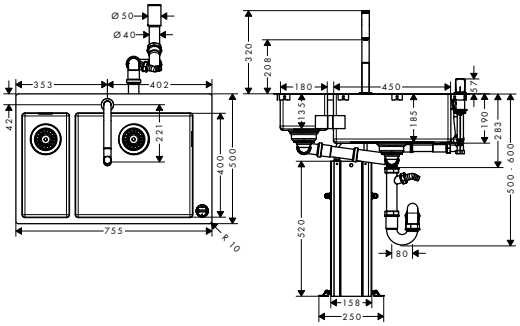

	finish	code no.	Euro
C71-F655-09 Sink combi 180/450	Chrome	43206000	1,475.20
	Stainless Steel Finish	43206800	1,633.30

Select · Air Power · Quick Clean · Comfort Zone

- consists of: built-in sink, 2-hole single lever kitchen mixer, control unit, hose box, manual waste and overflow set
- material sink: stainless steel
- number of bowls: 1 main bowl and 1 additional bowl
- tap hole and hole for control unit are pre-drilled
- sink depth: 190 mm
- cut-out dimensions: 735 x 480 mm
- cabinet size: 80 cm
- type of installation: flat on the countertop (self-rimming) or flush-mount installation
- position overflow: on the right side of the main bowl
- tap ledge reinforcing for a tight and stable seating of the kitchen mixer
- corner radius: 10 mm
- connection type: G ⅜ connections
- connection dimension: DN15
- flow rate 8 l/ min
- suitable for continuous flow water heaters
- ceramic cartridge
- MagFit magnetic shower support
- integrated non-return valve
- swivel range 150°
- normal spray
- ComfortZone 200
- Select button for a comfortable start/stop of the water flow
- sBox for quiet, smooth and protected hose guidance in the cabinet, under the countertop, with extension length up to 76 cm

Optional parts:

· F15 Cutting board walnut		40960000	122.90
· F16 Cutting board oak		40961000	92.20
NEW · F17 Mobile drainboard	Stainless Steel	40962800	80.00
NEW · F14 Multifunctional strainer	Matt Black	40963000	20.00

Measurements within scale drawings are in mm.

Technical specifications and units of measure are subject to change.



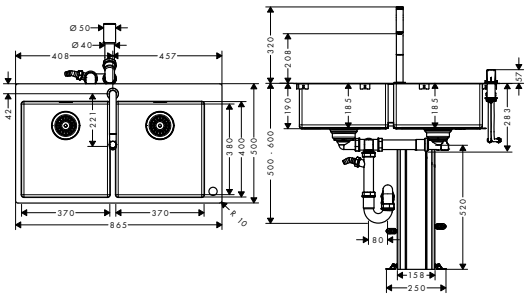

	finish	code no.	Euro
C71-F765-10 Sink combi 370/370	Chrome	43203000	1,580.50
· consists of: built-in sink, 2-hole single lever kitchen mixer, control unit, hose box, manual waste and overflow set	Stainless Steel Finish	43203800	1,738.70
· material sink: stainless steel			
· number of bowls: 2 main bowls			
· tap hole and hole for control unit are pre-drilled			
· sink depth: 190 mm			
· cut-out dimensions: 840 x 480 mm			
· cabinet size: 90 cm			
· type of installation: flat on the countertop (self-rimming) or flush-mount installation			
· tap ledge reinforcing for a tight and stable seating of the kitchen mixer			
· corner radius: 10 mm			
· connection type: G ⅜ connections			
· connection dimension: DN15			
· flow rate 8 l/ min			
· suitable for continuous flow water heaters			
· ceramic cartridge			
· MagFit magnetic shower support			
· integrated non-return valve			
· swivel range 150°			
· normal spray			
· ComfortZone 200			
· Select button for a comfortable start/stop of the water flow			
· sBox for quiet, smooth and protected hose guidance in the cabinet, under the countertop, with extension length up to 76 cm			
Optional parts:			
· F15 Cutting board walnut		40960000	122.90
· F16 Cutting board oak		40961000	92.20
NEW · F17 Mobile drainboard	Stainless Steel	40962800	80.00
NEW · F14 Multifunctional strainer	Matt Black	40963000	20.00

Select · Air Power · Quick Clean · Comfort Zone

Measurements within scale drawings are in mm.

Technical specifications and units of measure are subject to change.

SilicaTec sink combis



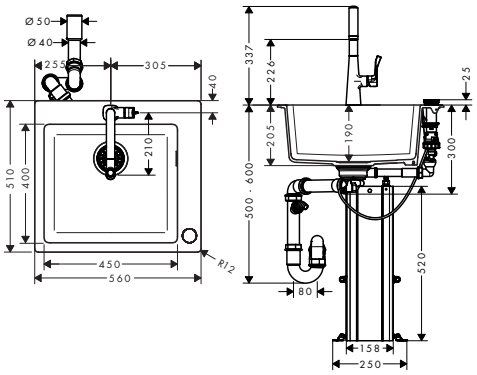

		finish	code no.	Euro
	C51-F450-01 sink combi 450 Select · consists of: built-in sink, 2-hole single lever kitchen mixer, control unit, hose box, automatic waste and overflow set · material sink: SilicaTec · number of bowls: 1 main bowl · tap hole for drilling is predefined (see scale drawing) · sink depth: 190 mm · cut-out dimensions: 540 x 490 mm · cabinet size: 60 cm · type of installation: topmount · position overflow: on the right side of the bowl · connection type: G ⅜ connections · connection dimension: DN15 · flow rate 7 l/ min · suitable for continuous flow water heaters · ceramic cartridge · MagFit magnetic shower support · integrated non-return valve · swivel range adjustable in 2 steps to 110° or 150° · laminar spray and shower spray · ComfortZone 220 · lockable shower spray, spray returns automatically through handle closing · sBox for quiet, smooth and protected hose guidance in the cabinet, under the countertop, with extension length up to 76 cm · push of control unit: intuitive start and stop function of the water flow, turn: automatic drain operation	Chrome	43212000 Select · Quick Clean · Comfort Zone	819.20
	Optional parts:			
	· F15 Cutting board walnut		40960000	122.90
	· F16 Cutting board oak		40961000	92.20
NEW	· F17 Mobile drainboard	Stainless Steel	40962800	80.00
NEW	· F14 Multifunctional strainer	Matt Black	40963000	20.00

Measurements within scale drawings are in mm.

Technical specifications and units of measure are subject to change.



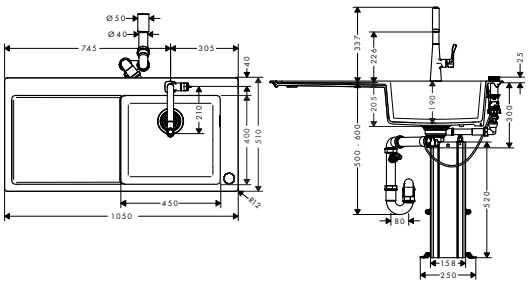

		finish	code no.	Euro
	C51-F450-03 Sink combi 450 Select with drainboard · consists of: built-in sink, 2-hole single lever kitchen mixer, control unit, hose box, automatic waste and overflow set · for installation in worktops from 20 mm · material sink: SilicaTec · number of bowls: 1 main bowl · with drainage · tap hole for drilling is predefined (see scale drawing) · orientation: bowl right · sink depth: 190 mm · cut-out dimensions: 1030 x 490 mm · cabinet size: 60 cm · type of installation: topmount · position overflow: on the right side of the bowl · connection type: G ⅜ connections · connection dimension: DN15 · flow rate 7 l/ min · suitable for continuous flow water heaters · ceramic cartridge · MagFit magnetic shower support · integrated non-return valve · swivel range adjustable in 2 steps to 110° or 150° · laminar spray and shower spray · ComfortZone 220 · lockable shower spray, spray returns automatically through handle closing · sBox for quiet, smooth and protected hose guidance in the cabinet, under the countertop, with extension length up to 76 cm · push of control unit: intuitive start and stop function of the water flow, turn: automatic drain operation	Chrome	43214000	972.80
	Optional parts:			
	· F15 Cutting board walnut		40960000	122.90
	· F16 Cutting board oak		40961000	92.20
NEW	· F14 Multifunctional strainer	Matt Black	40963000	20.00

Measurements within scale drawings are in mm.



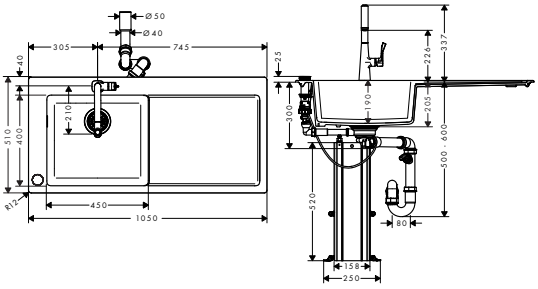

		finish	code no.	Euro
	C51-F450-11 sink combi 450 Select with drainboard · consists of: built-in sink, 2-hole single lever kitchen mixer, control unit, hose box, automatic waste and overflow set · material sink: SilicaTec · number of bowls: 1 main bowl · with drainage · tap hole for drilling is predefined (see scale drawing) · orientation: bowl left · sink depth: 190 mm · cut-out dimensions: 1030 x 490 mm · cabinet size: 60 cm · type of installation: topmount · position overflow: on the left side of the bowl · connection type: G ⅜ connections · connection dimension: DN15 · flow rate 7 l/ min · suitable for continuous flow water heaters · ceramic cartridge · MagFit magnetic shower support · integrated non-return valve · swivel range adjustable in 2 steps to 110° or 150° · laminar spray and shower spray · ComfortZone 220 · lockable shower spray, spray returns automatically through handle closing · sBox for quiet, smooth and protected hose guidance in the cabinet, under the countertop, with extension length up to 76 cm · push of control unit: intuitive start and stop function of the water flow, turn: automatic drain operation	Chrome	43227000 Select · Quick Clean · Comfort Zone	972.80
	Optional parts:			
	· F15 Cutting board walnut		40960000	122.90
	· F16 Cutting board oak		40961000	92.20
NEW	· F14 Multifunctional strainer	Matt Black	40963000	20.00

Measurements within scale drawings are in mm.

Technical specifications and units of measure are subject to change.



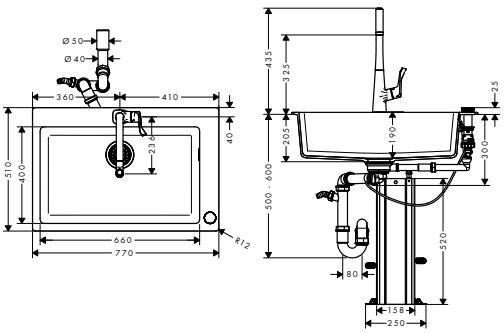

		finish	code no.	Euro
	C51-F660-02 Sink combi 660 Select · consists of: built-in sink, 2-hole single lever kitchen mixer, control unit, hose box, automatic waste and overflow set · material sink: SilicaTec · number of bowls: 1 main bowl · tap hole for drilling is predefined (see scale drawing) · sink depth: 190 mm · cut-out dimensions: 750 x 490 mm · cabinet size: 80 cm · type of installation: topmount · position overflow: on the right side of the bowl · connection type: G ⅜ connections · connection dimension: DN15 · flow rate 8 l/ min · suitable for continuous flow water heaters · ceramic cartridge · MagFit magnetic shower support · integrated non-return valve · swivel range adjustable in 2 steps to 110° or 150° · laminar spray and shower spray · ComfortZone 320 · lockable shower spray, spray returns automatically through handle closing · sBox for quiet, smooth and protected hose guidance in the cabinet, under the countertop, with extension length up to 76 cm · push of control unit: intuitive start and stop function of the water flow, turn: automatic drain operation	Chrome	43213000	921.60
	Optional parts:			
	· F15 Cutting board walnut		40960000	122.90
	· F16 Cutting board oak		40961000	92.20
NEW	· F17 Mobile drainboard	Stainless Steel	40962800	80.00
NEW	· F14 Multifunctional strainer	Matt Black	40963000	20.00

Measurements within scale drawings are in mm.

Technical specifications and units of measure are subject to change.



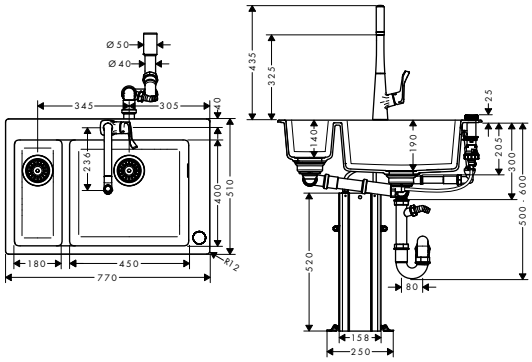

		finish	code no.	Euro
	C51-F635-04 Sink combi 180/450 Select · consists of: built-in sink, 2-hole single lever kitchen mixer, control unit, hose box, automatic waste and overflow set · material sink: SilicaTec · number of bowls: 1 main bowl and 1 additional bowl · tap hole for drilling is predefined (see scale drawing) · sink depth: 190 mm · cut-out dimensions: 750 x 490 mm · cabinet size: 80 cm · type of installation: topmount · position overflow: on the right side of the main bowl · connection type: G ⅜ connections · connection dimension: DN15 · flow rate 8 l/ min · suitable for continuous flow water heaters · ceramic cartridge · MagFit magnetic shower support · integrated non-return valve · swivel range adjustable in 2 steps to 110° or 150° · laminar spray and shower spray · ComfortZone 320 · lockable shower spray, spray returns automatically through handle closing · sBox for quiet, smooth and protected hose guidance in the cabinet, under the countertop, with extension length up to 76 cm · push of control unit: intuitive start and stop function of the water flow, turn: automatic drain operation	Chrome	43215000	942.10
	Optional parts:			
	· F15 Cutting board walnut		40960000	122.90
	· F16 Cutting board oak		40961000	92.20
NEW	· F17 Mobile drainboard	Stainless Steel	40962800	80.00
NEW	· F14 Multifunctional strainer	Matt Black	40963000	20.00

Measurements within scale drawings are in mm.

Technical specifications and units of measure are subject to change.



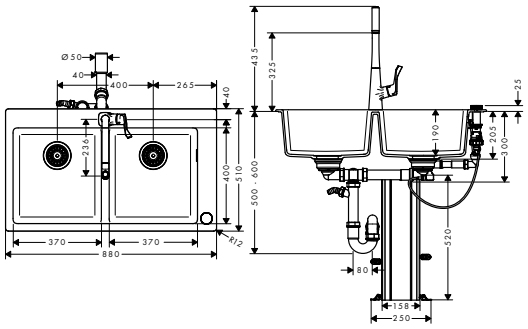

		finish	code no.	Euro
	C51-F770-05 Sink combi 370/370 Select · consists of: built-in sink, 2-hole single lever kitchen mixer, control unit, hose box, automatic waste and overflow set · material sink: SilicaTec · number of bowls: 2 main bowls · tap hole for drilling is predefined (see scale drawing) · sink depth: 190 mm · cut-out dimensions: 860 x 490 mm · cabinet size: 90 cm · type of installation: topmount · position overflow: on the right side of the bowl · connection type: G ⅜ connections · connection dimension: DN15 · flow rate 8 l/ min · suitable for continuous flow water heaters · ceramic cartridge · MagFit magnetic shower support · integrated non-return valve · swivel range adjustable in 2 steps to 110° or 150° · laminar spray and shower spray · ComfortZone 320 · lockable shower spray, spray returns automatically through handle closing · sBox for quiet, smooth and protected hose guidance in the cabinet, under the countertop, with extension length up to 76 cm · push of control unit: intuitive start and stop function of the water flow, turn: automatic drain operation	Chrome	43216000	1,003.50
	Optional parts:			
	· F15 Cutting board walnut		40960000	122.90
	· F16 Cutting board oak		40961000	92.20
NEW	· F17 Mobile drainboard	Stainless Steel	40962800	80.00
NEW	· F14 Multifunctional strainer	Matt Black	40963000	20.00

Measurements within scale drawings are in mm.

	finish	code no.	Euro



C51-F450-06 Sink combi 450 Chrome 43217000 788.50

Select · Air Power · Quick Clean · Comfort Zone

- consists of: built-in sink, 2-hole single lever kitchen mixer, control unit, hose box, manual waste and overflow set
- material sink: SilicaTec
- number of bowls: 1 main bowl
- tap hole for drilling is predefined (see scale drawing)
- sink depth: 190 mm
- cut-out dimensions: 540 x 490 mm
- cabinet size: 60 cm
- type of installation: topmount
- position overflow: on the right side of the bowl
- connection type: G ⅜ connections
- connection dimension: DN15
- flow rate 8 l/ min
- suitable for continuous flow water heaters
- ceramic cartridge
- MagFit magnetic shower support
- integrated non-return valve
- swivel range 150°
- normal spray
- ComfortZone 200
- Select button for a comfortable start/stop of the water flow
- sBox for quiet, smooth and protected hose guidance in the cabinet, under the countertop, with extension length up to 76 cm

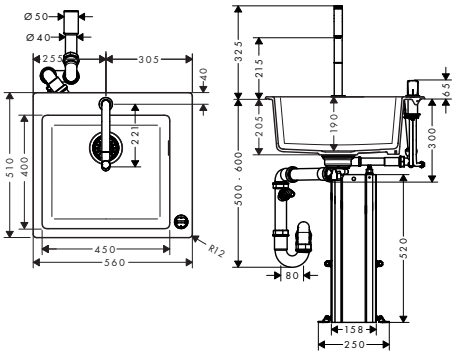

Optional parts:

· F15 Cutting board walnut		40960000	122.90
· F16 Cutting board oak		40961000	92.20
NEW · F17 Mobile drainboard	Stainless Steel	40962800	80.00
NEW · F14 Multifunctional strainer	Matt Black	40963000	20.00



C51-F450-08 Sink combi 450 with drainboard Chrome 43219000 942.10

Select · Air Power · Quick Clean · Comfort Zone

- consists of: built-in sink, 2-hole single lever kitchen mixer, control unit, hose box, manual waste and overflow set
- for installation in worktops from 20 mm
- material sink: SilicaTec
- number of bowls: 1 main bowl
- with drainage
- tap hole for drilling is predefined (see scale drawing)
- orientation: bowl right
- sink depth: 190 mm
- cut-out dimensions: 1030 x 490 mm
- cabinet size: 60 cm
- type of installation: topmount
- position overflow: on the right side of the bowl
- connection type: G ⅜ connections
- connection dimension: DN15
- flow rate 8 l/ min
- suitable for continuous flow water heaters
- ceramic cartridge
- MagFit magnetic shower support
- integrated non-return valve
- swivel range 150°
- normal spray
- ComfortZone 200
- Select button for a comfortable start/stop of the water flow
- sBox for quiet, smooth and protected hose guidance in the cabinet, under the countertop, with extension length up to 76 cm

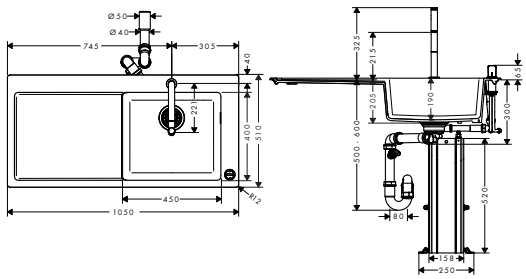

Optional parts:

· F15 Cutting board walnut		40960000	122.90
· F16 Cutting board oak		40961000	92.20
NEW · F14 Multifunctional strainer	Matt Black	40963000	20.00

Measurements within scale drawings are in mm.

Technical specifications and units of measure are subject to change.

	finish	code no.	Euro



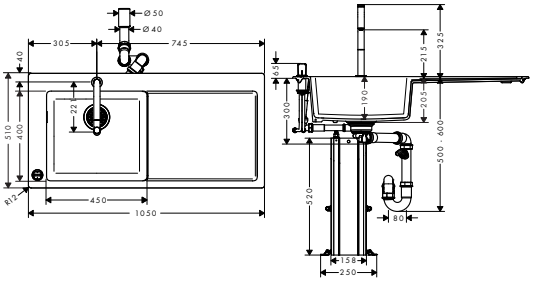

C51-F450-12 Sink combi 450 with drainboard — Chrome — 43228000 — 942.10

Select · Air Power · Quick Clean · Comfort Zone

- consists of: built-in sink, 2-hole single lever kitchen mixer, control unit, hose box, automatic waste and overflow set
- material sink: SilicaTec
- number of bowls: 1 main bowl
- with drainage
- tap hole for drilling is predefined (see scale drawing)
- orientation: bowl left
- sink depth: 190 mm
- cut-out dimensions: 1030 x 490 mm
- cabinet size: 60 cm
- type of installation: topmount
- position overflow: on the left side of the bowl
- connection type: G ⅜ connections
- connection dimension: DN15
- flow rate 8 l/ min
- suitable for continuous flow water heaters
- ceramic cartridge
- MagFit magnetic shower support
- integrated non-return valve
- swivel range 150°
- normal spray
- ComfortZone 200
- Select button for a comfortable start/stop of the water flow
- sBox for quiet, smooth and protected hose guidance in the cabinet, under the countertop, with extension length up to 76 cm

Optional parts:

· F15 Cutting board walnut		40960000	122.90
· F16 Cutting board oak		40961000	92.20
NEW · F14 Multifunctional strainer	Matt Black	40963000	20.00



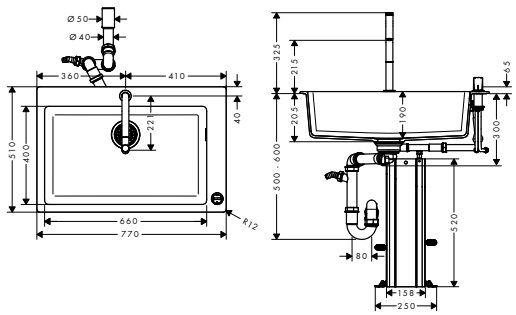

C51-F660-07 Sink combi 660 — Chrome — 43218000 — 860.20

Select · Air Power · Quick Clean · Comfort Zone

- consists of: built-in sink, 2-hole single lever kitchen mixer, control unit, hose box, manual waste and overflow set
- material sink: SilicaTec
- number of bowls: 1 main bowl
- tap hole for drilling is predefined (see scale drawing)
- sink depth: 190 mm
- cut-out dimensions: 750 x 490 mm
- cabinet size: 80 cm
- type of installation: topmount
- position overflow: on the right side of the bowl
- connection type: G ⅜ connections
- connection dimension: DN15
- flow rate 8 l/ min
- suitable for continuous flow water heaters
- ceramic cartridge
- MagFit magnetic shower support
- integrated non-return valve
- swivel range 150°
- normal spray
- ComfortZone 200
- Select button for a comfortable start/stop of the water flow
- sBox for quiet, smooth and protected hose guidance in the cabinet, under the countertop, with extension length up to 76 cm

Optional parts:

· F15 Cutting board walnut		40960000	122.90
· F16 Cutting board oak		40961000	92.20
NEW · F17 Mobile drainboard	Stainless Steel	40962800	80.00
NEW · F14 Multifunctional strainer	Matt Black	40963000	20.00

Measurements within scale drawings are in mm.

Technical specifications and units of measure are subject to change.

	finish	code no.	Euro



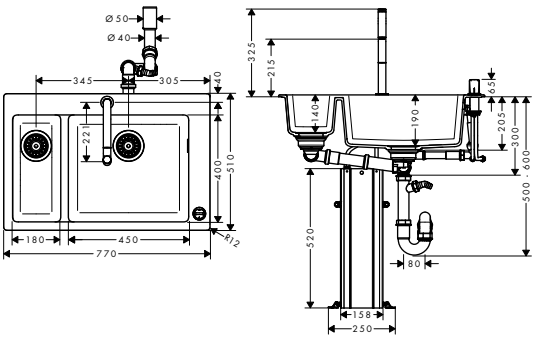

C51-F635-09 Sink combi 180/450 — Chrome — 43220000 — 880.60

Select · Air Power · Quick Clean · Comfort Zone

- consists of: built-in sink, 2-hole single lever kitchen mixer, control unit, hose box, manual waste and overflow set
- material sink: SilicaTec
- number of bowls: 1 main bowl and 1 additional bowl
- tap hole for drilling is predefined (see scale drawing)
- sink depth: 190 mm
- cut-out dimensions: 750 x 490 mm
- cabinet size: 80 cm
- type of installation: topmount
- position overflow: on the right side of the main bowl
- connection type: G ⅜ connections
- connection dimension: DN15
- flow rate 8 l/ min
- suitable for continuous flow water heaters
- ceramic cartridge
- MagFit magnetic shower support
- integrated non-return valve
- swivel range 150°
- normal spray
- ComfortZone 200
- Select button for a comfortable start/stop of the water flow
- sBox for quiet, smooth and protected hose guidance in the cabinet, under the countertop, with extension length up to 76 cm

Optional parts:

· F15 Cutting board walnut		40960000	122.90
· F16 Cutting board oak		40961000	92.20
NEW · F17 Mobile drainboard	Stainless Steel	40962800	80.00
NEW · F14 Multifunctional strainer	Matt Black	40963000	20.00



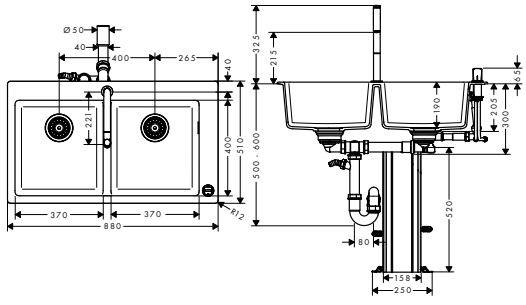

C51-F770-10 Sink combi 370/370 — Chrome — 43221000 — 942.10

Select · Air Power · Quick Clean · Comfort Zone

- consists of: built-in sink, 2-hole single lever kitchen mixer, control unit, hose box, manual waste and overflow set
- material sink: SilicaTec
- number of bowls: 2 main bowls
- tap hole for drilling is predefined (see scale drawing)
- sink depth: 190 mm
- cut-out dimensions: 860 x 490 mm
- cabinet size: 90 cm
- type of installation: topmount
- position overflow: on the right side of the bowl
- connection type: G ⅜ connections
- connection dimension: DN15
- flow rate 8 l/ min
- suitable for continuous flow water heaters
- ceramic cartridge
- MagFit magnetic shower support
- integrated non-return valve
- swivel range 150°
- normal spray
- ComfortZone 200
- Select button for a comfortable start/stop of the water flow
- sBox for quiet, smooth and protected hose guidance in the cabinet, under the countertop, with extension length up to 76 cm

Optional parts:

· F15 Cutting board walnut		40960000	122.90
· F16 Cutting board oak		40961000	92.20
NEW · F17 Mobile drainboard	Stainless Steel	40962800	80.00
NEW · F14 Multifunctional strainer	Matt Black	40963000	20.00

Measurements within scale drawings are in mm.

Technical specifications and units of measure are subject to change.

hansgrohe sinks

The stainless steel sinks at a glance

With a choice of bowl shapes including small, elongated or double, there is plenty of freedom to design a completely individual kitchen. Having the drainer on the left gives an option to extend the working area. The larger bowls are ideal for filling and cleaning bulky items while a double sink makes it possible to carry out several tasks at the same time. As every hansgrohe stainless steel sink can be fitted with any kitchen mixer and offers a number of installation options, the kitchen can be designed to meet the customer's every preference.

60 cm



S711-F450
Built-in sink 450
43301, -800, with tap hole drilling

S712-F450
43305, -800, with 2 tap holes drillings

60 cm



S715-F450
Built-in sink 450 with drainer
43306, -800, with tap hole drilling
S716-F450 (Drainer right, not shown)
43331, -800, with tap hole drilling

S717-F450
43307, -800, with 2 tap holes drillings
S718-F450 (Drainer right, not shown)
43332, -800, with 2 tap holes drillings

Installation options

All stainless steel sinks can be top-mounted or flush-fit in the worktop. An additional installation option is undermount sinks.

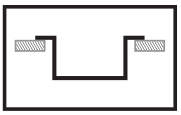

Surface-mounted installation

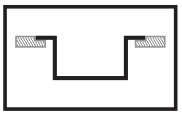

Flush-mounted installation

50 cm / 60 cm / 80 cm / 90 cm

Base cabinet

Optional accessories

F10
Fixation bracket set 16 pieces for 10–35 mm worktops
40950000

F11
Fixation bracket set 16 pieces for 30–55 mm worktops
40951000



A10
Drain cover
40952800

80 cm



S711-F660
Built-in sink 660
43302, -800, with tap hole drilling

S712-F660
43308, -800, with 2 tap holes drillings

80 cm



S711-F655
Built-in sink 180/450
43309, -800, with tap hole drilling

S712-F655
43310, -800, with 2 tap holes drillings

90 cm



S711-F765
Built-in sink 370/370
43303, -800, with tap hole drilling

S712-F765
43311, -800, with 2 tap holes drillings

hansgrohe sinks

The SilicaTec sinks at a glance

With a choice of bowl shapes including small, elongated or double, there is plenty of freedom to design a completely individual kitchen. Having the drainer on the left gives an option to extend the working area. The larger bowls are ideal for filling and cleaning bulky items. And a double sink makes it possible to carry out several tasks at the same time. As every hansgrohe SilicaTec sink can be fitted with any kitchen mixer, and is available in three colours with a several installation options, the kitchen can be designed to meet the customer's every preference.

60 cm



S510-F450
Built-in sink 450
43312, -170, -290, -380

60 cm



S514-F450
Built-in sink 450 with drainer
43314, -170, -290, -380

Installation options
All SilicaTec sinks can be top-mounted. An additional installation option is undermount sinks.

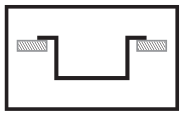

Surface-mounted installation



-170
graphite black



-290
stone grey



-380
concrete grey

80 cm



S510-F660
Built-in sink 660
43313, -170, -290, -380

80 cm



S510-F635
Built-in sink 180/450
43315, -170, -290, -380

90 cm



S510-F770
Built-in sink 370/370
43316, -170, -290, -380

Stainless steel built-in sinks

		finish	code no.	Euro
 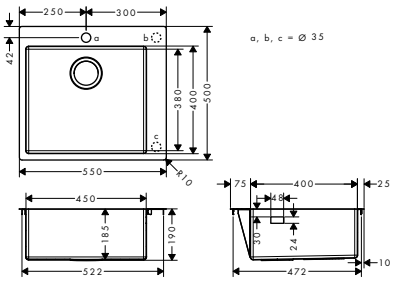	**S711-F450 Built-in sink 450** · material: stainless steel · number of bowls: 1 main bowl · predrilled tap hole · sink depth: 190 mm · cut-out dimensions: 530 x 480 mm · cabinet size: 60 cm · type of installation: flat on the countertop (self-rimming) or flush-mount installation · position overflow: on the right side of the bowl · tap ledge reinforcing for a tight and stable seating of the kitchen mixer · corner radius: 10 mm	Stainless Steel	43301800	611.10
	Required parts:			
NEW	· D14-10 Manual waste and overflow set for single bowl	Stainless Steel	43921800	24.70
	Optional parts:			
	· F15 Cutting board walnut		40960000	122.90
	· F16 Cutting board oak		40961000	92.20
NEW	· F17 Mobile drainboard	Stainless Steel	40962800	80.00
NEW	· F14 Multifunctional strainer	Matt Black	40963000	20.00
 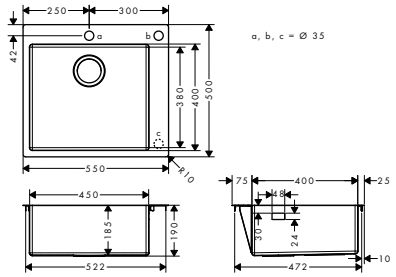	**S712-F450 Built-in sink 450** · material: stainless steel · number of bowls: 1 main bowl · tap hole and hole for pop-up waste control are pre-drilled · sink depth: 190 mm · cut-out dimensions: 530 x 480 mm · cabinet size: 60 cm · type of installation: flat on the countertop (self-rimming) or flush-mount installation · position overflow: on the right side of the bowl · tap ledge reinforcing for a tight and stable seating of the kitchen mixer · corner radius: 10 mm	Stainless Steel	43305800	611.10
	Required parts:			
NEW	· D14-11 Automatic waste and overflow set for single bowl	Stainless Steel	43931800	43.20
	Optional parts:			
	· F15 Cutting board walnut		40960000	122.90
	· F16 Cutting board oak		40961000	92.20
NEW	· F17 Mobile drainboard	Stainless Steel	40962800	80.00
NEW	· F14 Multifunctional strainer	Matt Black	40963000	20.00
 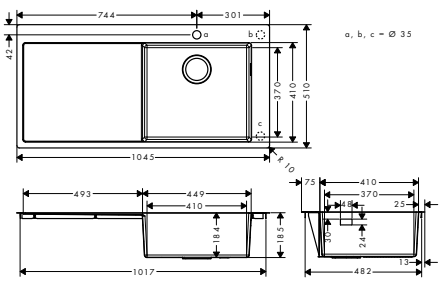	**S715-F450 Built-in sink 450 with drainboard** · for installation in worktops from 25 mm · material: stainless steel · number of bowls: 1 main bowl · with drainage · predrilled tap hole · orientation: bowl right · sink depth: 190 mm · cut-out dimensions: 1025 x 490 mm · cabinet size: 60 cm · type of installation: flat on the countertop (self-rimming) or flush-mount installation · position overflow: on the right side of the bowl · tap ledge reinforcing for a tight and stable seating of the kitchen mixer · corner radius: 10 mm	Stainless Steel	43306800	870.40
	Required parts:			
NEW	· D14-10 Manual waste and overflow set for single bowl	Stainless Steel	43921800	24.70
	Optional parts:			
NEW	· F14 Multifunctional strainer	Matt Black	40963000	20.00

Measurements within scale drawings are in mm.

Technical specifications and units of measure are subject to change.

		finish	code no.	Euro
 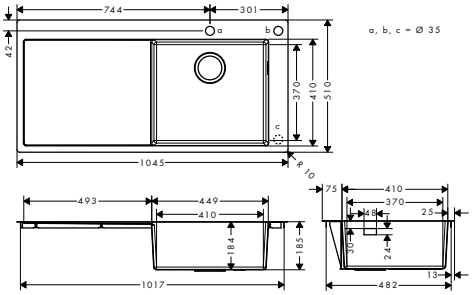	**S717-F450 Built-in sink 450 with drainboard** · for installation in worktops from 25 mm · material: stainless steel · number of bowls: 1 main bowl · with drainage · tap hole and hole for pop-up waste control are pre-drilled · orientation: bowl right · sink depth: 190 mm · cut-out dimensions: 1025 x 490 mm · cabinet size: 60 cm · type of installation: flat on the countertop (self-rimming) or flush-mount installation · position overflow: on the right side of the bowl · tap ledge reinforcing for a tight and stable seating of the kitchen mixer · corner radius: 10 mm	Stainless Steel	43307800	870.40
NEW	**Required parts:** · D14-11 Automatic waste and overflow set for single bowl	Stainless Steel	43931800	43.20
NEW	**Optional parts:** · F14 Multifunctional strainer	Matt Black	40963000	20.00
 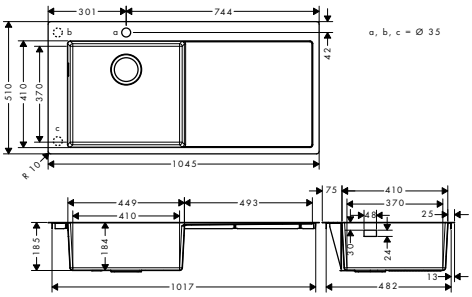	**S716-F450 Built-in sink 450 with drainboard** · for installation in worktops from 25 mm · material: stainless steel · number of bowls: 1 main bowl · with drainage · predrilled tap hole · orientation: bowl left · sink depth: 190 mm · cut-out dimensions: 1025 x 490 mm · cabinet size: 60 cm · type of installation: flat on the countertop (self-rimming) or flush-mount installation · position overflow: on the left side of the bowl · tap ledge reinforcing for a tight and stable seating of the kitchen mixer · corner radius: 10 mm	Stainless Steel	43331800	870.40
NEW	**Required parts:** · D14-10 Manual waste and overflow set for single bowl	Stainless Steel	43921800	24.70
NEW	**Optional parts:** · F14 Multifunctional strainer	Matt Black	40963000	20.00
 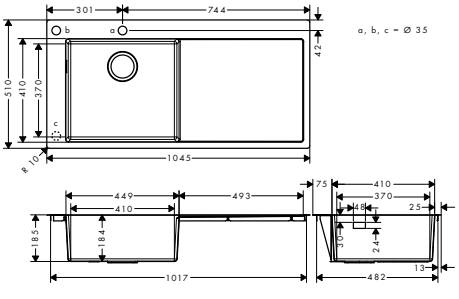	**S718-F450 Built-in sink 450 with drainboard** · for installation in worktops from 25 mm · material: stainless steel · number of bowls: 1 main bowl · with drainage · tap hole and hole for pop-up waste control are pre-drilled · orientation: bowl left · sink depth: 190 mm · cut-out dimensions: 1025 x 490 mm · cabinet size: 60 cm · type of installation: flat on the countertop (self-rimming) or flush-mount installation · position overflow: on the left side of the bowl · tap ledge reinforcing for a tight and stable seating of the kitchen mixer · corner radius: 10 mm	Stainless Steel	43332800	870.40
NEW	**Required parts:** · D14-11 Automatic waste and overflow set for single bowl	Stainless Steel	43931800	43.20
NEW	**Optional parts:** · F14 Multifunctional strainer	Matt Black	40963000	20.00

Measurements within scale drawings are in mm.

Technical specifications and units of measure are subject to change.

		finish	code no.	Euro
 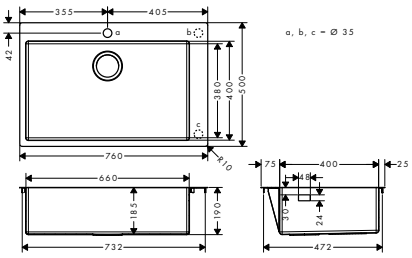	**S711-F660 Built-in sink 660** · material: stainless steel · number of bowls: 1 main bowl · predrilled tap hole · sink depth: 190 mm · cut-out dimensions: 740 x 480 mm · cabinet size: 80 cm · type of installation: flat on the countertop (self-rimming) or flush-mount installation · position overflow: on the right side of the bowl · tap ledge reinforcing for a tight and stable seating of the kitchen mixer · corner radius: 10 mm	Stainless Steel	43302800	663.90
	Required parts:			
NEW	· D14-10 Manual waste and overflow set for single bowl	Stainless Steel	43921800	24.70
	Optional parts:			
	· F15 Cutting board walnut		40960000	122.90
	· F16 Cutting board oak		40961000	92.20
NEW	· F17 Mobile drainboard	Stainless Steel	40962800	80.00
NEW	· F14 Multifunctional strainer	Matt Black	40963000	20.00
 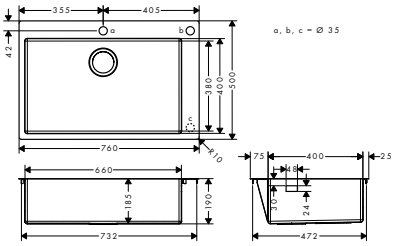	**S712-F660 Built-in sink 660** · material: stainless steel · number of bowls: 1 main bowl · tap hole and hole for pop-up waste control are pre-drilled · sink depth: 190 mm · cut-out dimensions: 740 x 480 mm · cabinet size: 80 cm · type of installation: flat on the countertop (self-rimming) or flush-mount installation · position overflow: on the right side of the bowl · tap ledge reinforcing for a tight and stable seating of the kitchen mixer · corner radius: 10 mm	Stainless Steel	43308800	663.90
	Required parts:			
NEW	· D14-11 Automatic waste and overflow set for single bowl	Stainless Steel	43931800	43.20
	Optional parts:			
	· F15 Cutting board walnut		40960000	122.90
	· F16 Cutting board oak		40961000	92.20
NEW	· F17 Mobile drainboard	Stainless Steel	40962800	80.00
NEW	· F14 Multifunctional strainer	Matt Black	40963000	20.00
 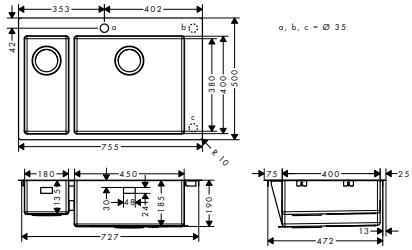	**S711-F655 Built-in sink 180/450** · material: stainless steel · number of bowls: 1 main bowl and 1 additional bowl · predrilled tap hole · sink depth: 190 mm · cut-out dimensions: 735 x 480 mm · cabinet size: 80 cm · type of installation: flat on the countertop (self-rimming) or flush-mount installation · position overflow: on the right side of the main bowl · tap ledge reinforcing for a tight and stable seating of the kitchen mixer · corner radius: 10 mm	Stainless Steel	43309800	1,032.60
	Required parts:			
NEW	· D15-10 Manual waste and overflow set for double bowl	Stainless Steel	43922800	41.20
	Optional parts:			
	· F15 Cutting board walnut		40960000	122.90
	· F16 Cutting board oak		40961000	92.20
NEW	· F17 Mobile drainboard	Stainless Steel	40962800	80.00
NEW	· F14 Multifunctional strainer	Matt Black	40963000	20.00

Measurements within scale drawings are in mm.

Technical specifications and units of measure are subject to change.

		finish	code no.	Euro
 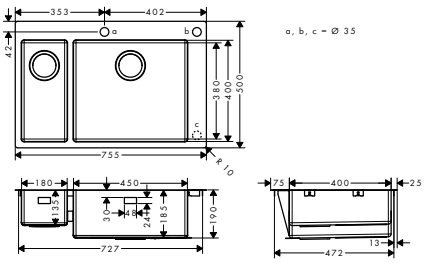	**S712-F655 Built-in sink 180/450** · material: stainless steel · number of bowls: 1 main bowl and 1 additional bowl · tap hole and hole for pop-up waste control are pre-drilled · sink depth: 190 mm · cut-out dimensions: 735 x 480 mm · cabinet size: 80 cm · type of installation: flat on the countertop (self-rimming) or flush-mount installation · position overflow: on the right side of the main bowl · tap ledge reinforcing for a tight and stable seating of the kitchen mixer · corner radius: 10 mm	Stainless Steel	43310800	1,032.60
	Required parts:			
NEW	· D15-11 Automatic waste and overflow set for double bowl	Stainless Steel	43932800	66.90
	Optional parts:			
	· F15 Cutting board walnut		40960000	122.90
	· F16 Cutting board oak		40961000	92.20
NEW	· F17 Mobile drainboard	Stainless Steel	40962800	80.00
NEW	· F14 Multifunctional strainer	Matt Black	40963000	20.00
 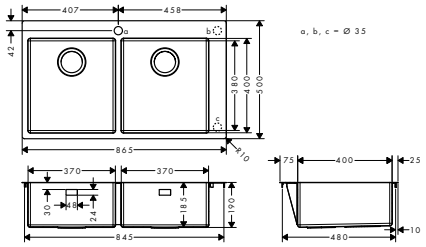	**S711-F765 Built-in sink 370/370** · material: stainless steel · number of bowls: 2 main bowls · predrilled tap hole · sink depth: 190 mm · cut-out dimensions: 845 x 480 mm · cabinet size: 90 cm · type of installation: flat on the countertop (self-rimming) or flush-mount installation · tap ledge reinforcing for a tight and stable seating of the kitchen mixer · corner radius: 10 mm	Stainless Steel	43303800	1,138.00
	Required parts:			
NEW	· D15-10 Manual waste and overflow set for double bowl	Stainless Steel	43922800	41.20
	Optional parts:			
	· F15 Cutting board walnut		40960000	122.90
	· F16 Cutting board oak		40961000	92.20
NEW	· F17 Mobile drainboard	Stainless Steel	40962800	80.00
NEW	· F14 Multifunctional strainer	Matt Black	40963000	20.00
 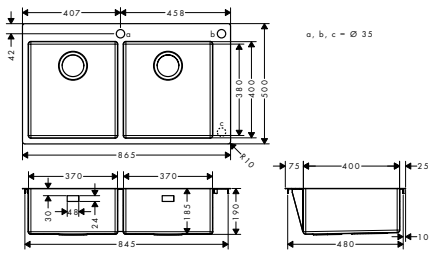	**S712-F765 Built-in sink 370/370** · material: stainless steel · number of bowls: 2 main bowls · tap hole and hole for pop-up waste control are pre-drilled · sink depth: 190 mm · cut-out dimensions: 845 x 480 mm · cabinet size: 90 cm · type of installation: flat on the countertop (self-rimming) or flush-mount installation · tap ledge reinforcing for a tight and stable seating of the kitchen mixer · corner radius: 10 mm	Stainless Steel	43311800	1,138.00
	Required parts:			
NEW	· D15-11 Automatic waste and overflow set for double bowl	Stainless Steel	43932800	66.90
	Optional parts:			
	· F15 Cutting board walnut		40960000	122.90
	· F16 Cutting board oak		40961000	92.20
NEW	· F17 Mobile drainboard	Stainless Steel	40962800	80.00
NEW	· F14 Multifunctional strainer	Matt Black	40963000	20.00

Measurements within scale drawings are in mm.

Technical specifications and units of measure are subject to change.

S41 stainless steel built-in sinks

	finish	code no.	Euro

NEW



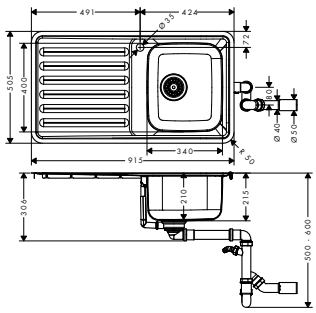

S4111-F340 Built-in sink 340/400 with drainboard
- Manual waste set included
- material: stainless steel
- number of bowls: 1 main bowl
- with drainage
- tap hole for drilling is predefined (see scale drawing)
- orientation: reversible
- cut-out dimensions: 895 x 485 mm
- cabinet size: 45 cm
- type of installation: flat on the countertop (self-rimming) or flush-mount installation
- position overflow: on the side of the bowl under drainboard
- tap ledge reinforcing for a tight and stable seating of the kitchen mixer
- corner radius: 70 mm

Stainless Steel | 43340800 | 320.00

NEW



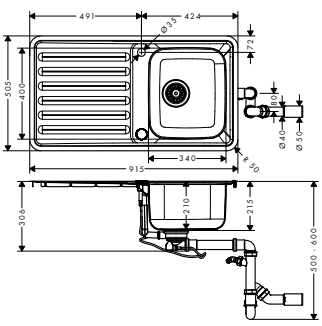

S4113-F340 Built-in sink 340/400 with drainboard
- Automatic waste set included
- material: stainless steel
- number of bowls: 1 main bowl
- with drainage
- tap hole and hole for pop-up waste control are pre-drilled
- orientation: reversible
- cut-out dimensions: 895 x 485 mm
- cabinet size: 45 cm
- type of installation: flat on the countertop (self-rimming) or flush-mount installation
- position overflow: on the side of the bowl under drainboard
- tap ledge reinforcing for a tight and stable seating of the kitchen mixer
- corner radius: 70 mm

Stainless Steel | 43337800 | 340.00

NEW



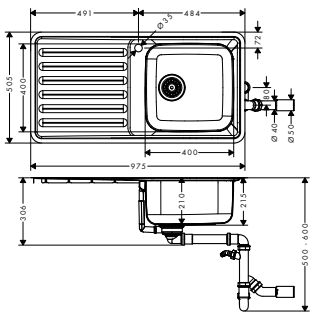

S4111-F400 Built-in sink 400/400 with drainboard
- Manual waste set included
- material: stainless steel
- number of bowls: 1 main bowl
- with drainage
- tap hole for drilling is predefined (see scale drawing)
- orientation: reversible
- cut-out dimensions: 955 x 485 mm
- cabinet size: 50 cm
- type of installation: flat on the countertop (self-rimming) or flush-mount installation
- position overflow: on the side of the bowl under drainboard
- tap ledge reinforcing for a tight and stable seating of the kitchen mixer
- corner radius: 70 mm

Stainless Steel | 43341800 | 340.00

NEW



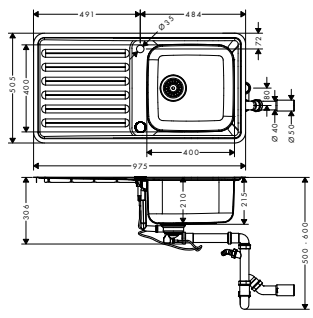

S4113-F400 Built-in sink 400/400 with drainboard
- Automatic waste set included
- material: stainless steel
- number of bowls: 1 main bowl
- with drainage
- tap hole and hole for pop-up waste control are pre-drilled
- orientation: reversible
- cut-out dimensions: 955 x 485 mm
- cabinet size: 50 cm
- type of installation: flat on the countertop (self-rimming) or flush-mount installation
- position overflow: on the side of the bowl under drainboard
- tap ledge reinforcing for a tight and stable seating of the kitchen mixer
- corner radius: 70 mm

Stainless Steel | 43338800 | 360.00

Measurements within scale drawings are in mm.

Technical specifications and units of measure are subject to change.

	finish	code no.	Euro
NEW  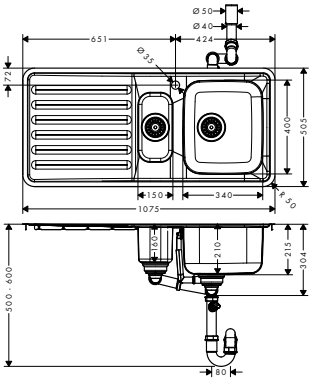	Stainless Steel	43342800	390.00

S4111-F540 Built-in sink 340/150/400 with drainboard
- Manual waste set included
- material: stainless steel
- number of bowls: 1 main bowl and 1 additional bowl
- with drainage
- tap hole for drilling is predefined (see scale drawing)
- orientation: reversible
- cut-out dimensions: 1055 x 485 mm
- cabinet size: 60 cm
- type of installation: flat on the countertop (self-rimming) or flush-mount installation
- position overflow: on the side of the bowl under drainboard
- tap ledge reinforcing for a tight and stable seating of the kitchen mixer
- corner radius: 70 mm

NEW  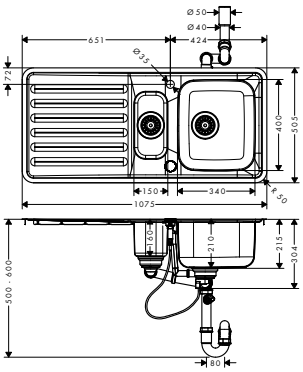	Stainless Steel	43339800	410.00

S4113-F540 Built-in sink 340/150/400 with drainboard
- Automatic waste set included
- material: stainless steel
- number of bowls: 1 main bowl and 1 additional bowl
- with drainage
- tap hole and hole for pop-up waste control are pre-drilled
- orientation: reversible
- cut-out dimensions: 1055 x 485 mm
- cabinet size: 60 cm
- type of installation: flat on the countertop (self-rimming) or flush-mount installation
- position overflow: on the side of the bowl under drainboard
- tap ledge reinforcing for a tight and stable seating of the kitchen mixer
- corner radius: 70 mm

NEW  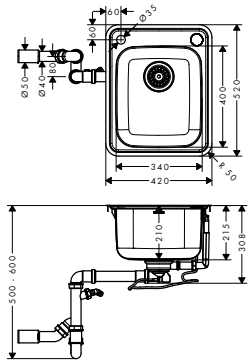	Stainless Steel	43334800	240.00

S412-F340 Built-in sink 340/400
- Automatic waste set included
- material: stainless steel
- number of bowls: 1 main bowl
- tap hole and hole for pop-up waste control are pre-drilled
- cut-out dimensions: 410 x 510 mm
- cabinet size: 45 cm
- type of installation: flat on the countertop (self-rimming) or flush-mount installation
- position overflow: on the side of the bowl
- tap ledge reinforcing for a tight and stable seating of the kitchen mixer
- corner radius: 70 mm

Measurements within scale drawings are in mm.

Technical specifications and units of measure are subject to change.

	finish	code no.	Euro
S412-F400 Built-in sink 400/400 · Automatic waste set included · material: stainless steel · number of bowls: 1 main bowl · tap hole and hole for pop-up waste control are pre-drilled · cut-out dimensions: 470 x 510 mm · cabinet size: 50 cm · type of installation: flat on the countertop (self-rimming) or flush-mount installation · position overflow: on the side of the bowl · tap ledge reinforcing for a tight and stable seating of the kitchen mixer · corner radius: 70 mm	Stainless Steel	43335800	250.00

NEW



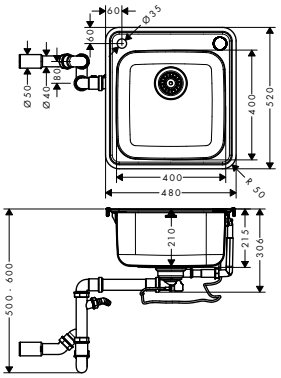

S412-F500 Built-in sink 500/400 · Automatic waste set included · material: stainless steel · number of bowls: 1 main bowl · tap hole and hole for pop-up waste control are pre-drilled · cut-out dimensions: 570 x 510 mm · cabinet size: 60 cm · type of installation: flat on the countertop (self-rimming) or flush-mount installation · position overflow: on the side of the bowl · tap ledge reinforcing for a tight and stable seating of the kitchen mixer · corner radius: 70 mm	Stainless Steel	43336800	260.00

NEW



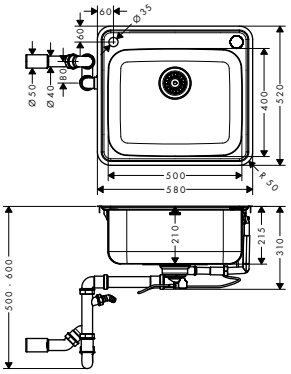

SilicaTec built-in sinks



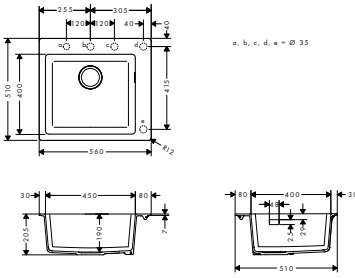

S510-F450 Built-in sink 450 · material: SilicaTec · number of bowls: 1 main bowl · tap hole for drilling is predefined (see scale drawing) · sink depth: 190 mm · cut-out dimensions: 540 x 490 mm · cabinet size: 60 cm · type of installation: topmount · position overflow: on the right side of the bowl	Graphiteblack Stonegrey Concretegrey	43312170 43312290 43312380	288.80 288.80 288.80
Required parts (choose one)			
· D16-10 Manual waste and overflow set for single bowl granite	Chrome	43927000	24.60
· D16-11 Automatic waste and overflow set for single bowl granite	Chrome	43937000	43.00
· D16-12 Automatic waste and overflow set for single bowl granite Select	Chrome	43947000	29.70
Optional parts:			
· F15 Cutting board walnut		40960000	122.90
· F16 Cutting board oak		40961000	92.20
NEW · F17 Mobile drainboard	Stainless Steel	40962800	80.00
NEW · F14 Multifunctional strainer	Matt Black	40963000	20.00

Measurements within scale drawings are in mm.

Technical specifications and units of measure are subject to change.



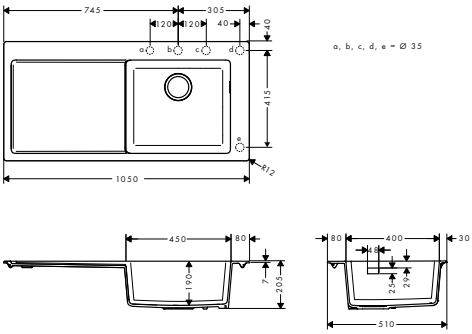

	finish	code no.	Euro
S514-F450 Built-in sink 450 with drainboard · for installation in worktops from 20 mm · material: SilicaTec · number of bowls: 1 main bowl · with drainage · tap hole for drilling is predefined (see scale drawing) · orientation: bowl right · sink depth: 190 mm · cut-out dimensions: 1030 x 490 mm · cabinet size: 60 cm · type of installation: topmount · position overflow: on the right side of the bowl	Graphiteblack Stonegrey Concretegrey	43314170 43314290 43314380	448.50 448.50 448.50
Required parts (choose one)			
· D16-10 Manual waste and overflow set for single bowl granite	Chrome	43927000	24.60
· D16-11 Automatic waste and overflow set for single bowl granite	Chrome	43937000	43.00
· D16-12 Automatic waste and overflow set for single bowl granite Select	Chrome	43947000	29.70
Optional parts:			
· F15 Cutting board walnut		40960000	122.90
· F16 Cutting board oak		40961000	92.20
NEW · F14 Multifunctional strainer	Matt Black	40963000	20.00



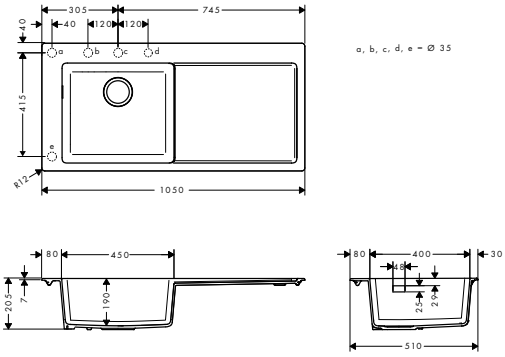

	finish	code no.	Euro
S5110-F450 Built-in sink 450 with drainboard · for installation in worktops from 20 mm · material: SilicaTec · number of bowls: 1 main bowl · with drainage · tap hole for drilling is predefined (see scale drawing) · orientation: bowl left · sink depth: 190 mm · cut-out dimensions: 1030 x 490 mm · cabinet size: 60 cm · type of installation: topmount · position overflow: on the left side of the bowl	Graphiteblack Stonegrey Concretegrey	43330170 43330290 43330380	448.50 448.50 448.50
Required parts (choose one)			
· D16-10 Manual waste and overflow set for single bowl granite	Chrome	43927000	24.60
· D16-11 Automatic waste and overflow set for single bowl granite	Chrome	43937000	43.00
· D16-12 Automatic waste and overflow set for single bowl granite Select	Chrome	43947000	29.70
Optional parts:			
· F15 Cutting board walnut		40960000	122.90
· F16 Cutting board oak		40961000	92.20
NEW · F14 Multifunctional strainer	Matt Black	40963000	20.00

Measurements within scale drawings are in mm.

	finish	code no.	Euro
S510-F660 Built-in sink 660	Graphiteblack	43313170	368.60
· material: SilicaTec	Stonegrey	43313290	368.60
· number of bowls: 1 main bowl	Concretegrey	43313380	368.60
· tap hole for drilling is predefined (see scale drawing)			
· sink depth: 190 mm			
· cut-out dimensions: 750 x 490 mm			
· cabinet size: 80 cm			
· type of installation: topmount			
· position overflow: on the right side of the bowl			
Required parts (choose one)			
· D16-10 Manual waste and overflow set for single bowl granite	Chrome	43927000	24.60
· D16-11 Automatic waste and overflow set for single bowl granite	Chrome	43937000	43.00
· D16-12 Automatic waste and overflow set for single bowl granite Select	Chrome	43947000	29.70
Optional parts:			
· F15 Cutting board walnut		40960000	122.90
· F16 Cutting board oak		40961000	92.20
NEW · F17 Mobile drainboard	Stainless Steel	40962800	80.00
NEW · F14 Multifunctional strainer	Matt Black	40963000	20.00
S510-F635 Built-in sink 180/450	Graphiteblack	43315170	368.60
· material: SilicaTec	Stonegrey	43315290	368.60
· number of bowls: 1 main bowl and 1 additional bowl	Concretegrey	43315380	368.60
· tap hole for drilling is predefined (see scale drawing)			
· sink depth: 190 mm			
· cut-out dimensions: 750 x 490 mm			
· cabinet size: 80 cm			
· type of installation: topmount			
· position overflow: on the right side of the main bowl			
Required parts (choose one)			
· D17-10 Manual waste and overflow set for double bowl granite	Chrome	43928000	41.00
· D17-11 Automatic waste and overflow set for double bowl granite	Chrome	43938000	66.60
· D17-12 Automatic waste and overflow set for double bowl granite Select	Chrome	43948000	47.10
Optional parts:			
· F15 Cutting board walnut		40960000	122.90
· F16 Cutting board oak		40961000	92.20
NEW · F17 Mobile drainboard	Stainless Steel	40962800	80.00
NEW · F14 Multifunctional strainer	Matt Black	40963000	20.00
S510-F770 Built-in sink 370/370	Graphiteblack	43316170	430.10
· material: SilicaTec	Stonegrey	43316290	430.10
· number of bowls: 2 main bowls	Concretegrey	43316380	430.10
· tap hole for drilling is predefined (see scale drawing)			
· sink depth: 190 mm			
· cut-out dimensions: 860 x 490 mm			
· cabinet size: 90 cm			
· type of installation: topmount			
· position overflow: on the right side of the bowl			
Required parts (choose one)			
· D17-10 Manual waste and overflow set for double bowl granite	Chrome	43928000	41.00
· D17-11 Automatic waste and overflow set for double bowl granite	Chrome	43938000	66.60
· D17-12 Automatic waste and overflow set for double bowl granite Select	Chrome	43948000	47.10
Optional parts:			
· F15 Cutting board walnut		40960000	122.90
· F16 Cutting board oak		40961000	92.20
NEW · F17 Mobile drainboard	Stainless Steel	40962800	80.00
NEW · F14 Multifunctional strainer	Matt Black	40963000	20.00

Measurements within scale drawings are in mm.

Technical specifications and units of measure are subject to change.

hansgrohe under-mounted sinks

Stainless steel under-mounted sinks at a glance

With a choice of bowl shapes including small, elongated or double, there is plenty of freedom to design a completely individual kitchen. The larger bowls are ideal for filling and cleaning bulky items while a double sink makes it possible to carry out several tasks at the same time. As every hansgrohe under-mounted sink in stainless steel can be fitted with any kitchen mixer, the kitchen can be designed to meet the customer's every preference.

50 cm



S719-U400
Undermount sink 400
43425, -800

60 cm



S719-U450
Undermount sink 450
43426, -800

60 cm



S719-U500
Undermount sink 500
43427, -800

Undermount versions
All undermount sinks are attached to the worktop from below.

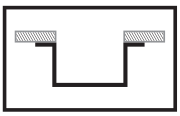

Undermounted

80 cm



S719-U660
Undermount sink 660
43428, -800

80 cm



S719-U655
Undermount sink 180/450
43429, -800

90 cm



S719-U765
Undermount sink 370/370
43430, -800

hansgrohe under-mounted sinks

SilicaTec under-mounted sinks at a glance

With a choice of bowl shapes including small, elongated or double, there is plenty of freedom to design a completely individual kitchen. The larger bowls are ideal for filling and cleaning bulky items while a double sink makes it possible to carry out several tasks at the same time. Available in three colours, hansgrohe under-mounted sinks in SilicaTec can be fitted with any kitchen mixer so the kitchen can be designed to meet the customer's every preference.

60 cm



S510-U450
Undermount sink 450
43431, -170, -290, -380

80 cm



S510-U660
Undermount sink 660
43432, -170, -290, -380

80 cm



S510-U635
Undermount sink 180/450
43433, -170, -290, -380

Undermount versions
All undermount sinks are attached to the worktop from below.

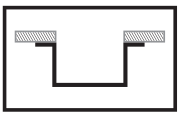

Undermounted



-170
graphite black

-290
stone grey

-380
concrete grey

90 cm



S510-U770
Undermount sink 370/370
#43434, -170, -290, -380

Stainless steel undermount sinks

		finish	code no.	Euro
	**S719-U400 Under-mount sink 400** · material: stainless steel · number of bowls: 1 main bowl · sink depth: 190 mm · cut-out dimensions: 398 x 398 mm · cabinet size: 50 cm · type of installation: undermount · position overflow: on the right side of the bowl · corner radius: 10 mm · waste set not included - please order one waste set from the optional parts	Stainless Steel	43425800	421.50
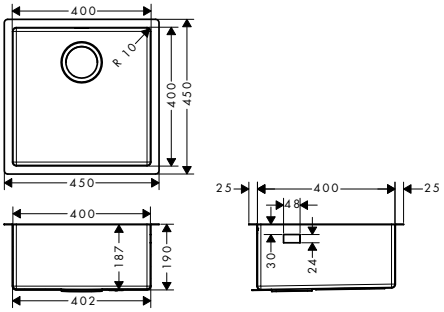	**Required parts (choose one)**			
NEW	· D14-12 Automatic waste and overflow set for single bowl Select	Stainless Steel	43941800	29.80
NEW	· D14-11 Automatic waste and overflow set for single bowl	Stainless Steel	43931800	43.20
NEW	· D14-10 Manual waste and overflow set for single bowl	Stainless Steel	43921800	24.70
	Optional parts:			
	· F15 Cutting board walnut		40960000	122.90
	· F16 Cutting board oak		40961000	92.20
NEW	· F17 Mobile drainboard	Stainless Steel	40962800	80.00
NEW	· F14 Multifunctional strainer	Matt Black	40963000	20.00
	**S719-U450 Under-mount sink 450** · material: stainless steel · number of bowls: 1 main bowl · sink depth: 190 mm · cut-out dimensions: 448 x 398 mm · cabinet size: 60 cm · type of installation: undermount · position overflow: on the right side of the bowl · corner radius: 10 mm · waste set not included - please order one waste set from the optional parts	Stainless Steel	43426800	453.10
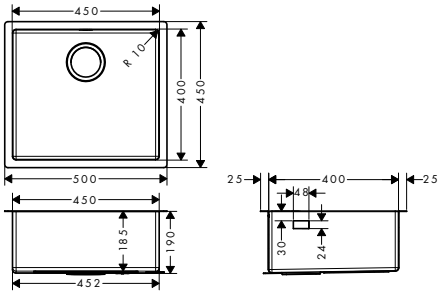	**Required parts (choose one)**			
NEW	· D14-10 Manual waste and overflow set for single bowl	Stainless Steel	43921800	24.70
NEW	· D14-11 Automatic waste and overflow set for single bowl	Stainless Steel	43931800	43.20
NEW	· D14-12 Automatic waste and overflow set for single bowl Select	Stainless Steel	43941800	29.80
	Optional parts:			
	· F15 Cutting board walnut		40960000	122.90
	· F16 Cutting board oak		40961000	92.20
NEW	· F17 Mobile drainboard	Stainless Steel	40962800	80.00
NEW	· F14 Multifunctional strainer	Matt Black	40963000	20.00

Measurements within scale drawings are in mm.

Technical specifications and units of measure are subject to change.



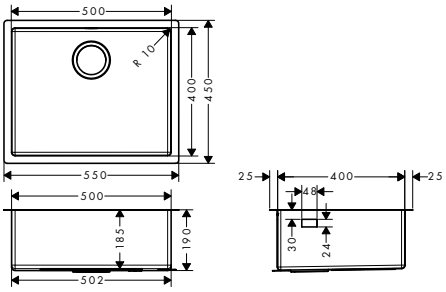

		finish	code no.	Euro
	S719-U500 Under-mount sink 500 · please note, when installing in a 60 cm sink cabinet the side panel must be cut out · material: stainless steel · number of bowls: 1 main bowl · sink depth: 190 mm · cut-out dimensions: 498 x 398 mm · cabinet size: 60 cm · type of installation: undermount · position overflow: on the right side of the bowl · corner radius: 10 mm · waste set not included - please order one waste set from the optional parts	Stainless Steel	43427800	474.20
	Required parts (choose one)			
NEW	· D14-10 Manual waste and overflow set for single bowl	Stainless Steel	43921800	24.70
NEW	· D14-11 Automatic waste and overflow set for single bowl	Stainless Steel	43931800	43.20
NEW	· D14-12 Automatic waste and overflow set for single bowl Select	Stainless Steel	43941800	29.80
	Optional parts:			
	· F15 Cutting board walnut		40960000	122.90
	· F16 Cutting board oak		40961000	92.20
NEW	· F17 Mobile drainboard	Stainless Steel	40962800	80.00
NEW	· F14 Multifunctional strainer	Matt Black	40963000	20.00



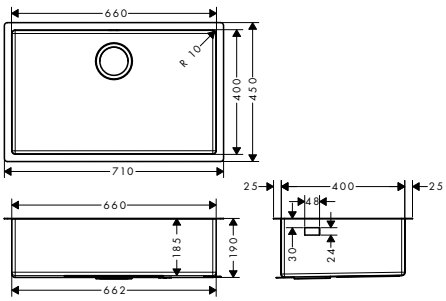

		finish	code no.	Euro
	S719-U660 Under-mount sink 660 · material: stainless steel · number of bowls: 1 main bowl · sink depth: 190 mm · cut-out dimensions: 658 x 398 mm · cabinet size: 80 cm · type of installation: undermount · position overflow: on the right side of the bowl · corner radius: 10 mm · waste set not included - please order one waste set from the optional parts	Stainless Steel	43428800	495.20
	Required parts (choose one)			
NEW	· D14-10 Manual waste and overflow set for single bowl	Stainless Steel	43921800	24.70
NEW	· D14-11 Automatic waste and overflow set for single bowl	Stainless Steel	43931800	43.20
NEW	· D14-12 Automatic waste and overflow set for single bowl Select	Stainless Steel	43941800	29.80
	Optional parts:			
	· F15 Cutting board walnut		40960000	122.90
	· F16 Cutting board oak		40961000	92.20
NEW	· F17 Mobile drainboard	Stainless Steel	40962800	80.00
NEW	· F14 Multifunctional strainer	Matt Black	40963000	20.00

Measurements within scale drawings are in mm.

Technical specifications and units of measure are subject to change.

		finish	code no.	Euro
	**S719-U655 Under-mount sink 180/450** · material: stainless steel · number of bowls: 1 main bowl and 1 additional bowl · sink depth: 190 mm · cut-out dimensions: 653 x 398 mm · cabinet size: 80 cm · type of installation: undermount · position overflow: on the right side of the main bowl · corner radius: 10 mm · waste set not included - please order one waste set from the optional parts	Stainless Steel	43429800	832.40
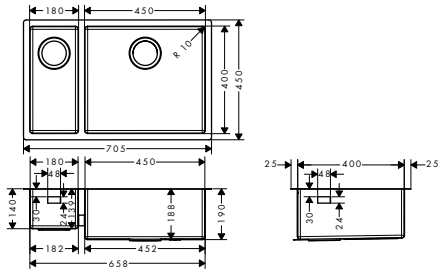	**Required parts (choose one)**			
NEW	· D15-10 Manual waste and overflow set for double bowl	Stainless Steel	43922800	41.20
NEW	· D15-11 Automatic waste and overflow set for double bowl	Stainless Steel	43932800	66.90
NEW	· D15-12 Automatic waste and overflow set for double bowl Select	Stainless Steel	43942800	47.30
	Optional parts:			
	· F15 Cutting board walnut		40960000	122.90
	· F16 Cutting board oak		40961000	92.20
NEW	· F17 Mobile drainboard	Stainless Steel	40962800	80.00
NEW	· F14 Multifunctional strainer	Matt Black	40963000	20.00
	**S719-U765 Under-mount sink 370/370** · material: stainless steel · number of bowls: 2 main bowls · sink depth: 190 mm · cut-out dimensions: 763 x 398 mm · cabinet size: 90 cm · type of installation: undermount · corner radius: 10 mm · waste set not included - please order one waste set from the optional parts	Stainless Steel	43430800	906.10
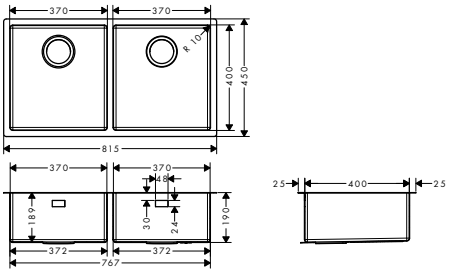	**Required parts (choose one)**			
NEW	· D15-10 Manual waste and overflow set for double bowl	Stainless Steel	43922800	41.20
NEW	· D15-11 Automatic waste and overflow set for double bowl	Stainless Steel	43932800	66.90
NEW	· D15-12 Automatic waste and overflow set for double bowl Select	Stainless Steel	43942800	47.30
	Optional parts:			
	· F15 Cutting board walnut		40960000	122.90
	· F16 Cutting board oak		40961000	92.20
NEW	· F14 Multifunctional strainer	Matt Black	40963000	20.00
NEW	· F17 Mobile drainboard	Stainless Steel	40962800	80.00

Measurements within scale drawings are in mm.

Technical specifications and units of measure are subject to change.

SilicaTec undermount sinks

	finish	code no.	Euro
S510-U450 Under-mount sink 450	Graphiteblack	43431170	355.30
· material: SilicaTec	Stonegrey	43431290	355.30
· number of bowls: 1 main bowl	Concretegrey	43431380	355.30
· sink depth: 190 mm			
· cut-out dimensions: 448 x 398 mm			
· cabinet size: 60 cm			
· type of installation: undermount			
· position overflow: on the right side of the bowl			
Required parts (choose one)			
· D16-10 Manual waste and overflow set for single bowl granite	Chrome	43927000	24.60
· D16-11 Automatic waste and overflow set for single bowl granite	Chrome	43937000	43.00
· D16-12 Automatic waste and overflow set for single bowl granite Select	Chrome	43947000	29.70
Optional parts:			
· F15 Cutting board walnut		40960000	122.90
· F16 Cutting board oak		40961000	92.20
NEW · F17 Mobile drainboard	Stainless Steel	40962800	80.00
NEW · F14 Multifunctional strainer	Matt Black	40963000	20.00
S510-U660 Under-mount sink 660	Graphiteblack	43432170	435.20
· material: SilicaTec	Stonegrey	43432290	435.20
· number of bowls: 1 main bowl	Concretegrey	43432380	435.20
· sink depth: 190 mm			
· cut-out dimensions: 658 x 398 mm			
· cabinet size: 80 cm			
· type of installation: undermount			
· position overflow: on the right side of the bowl			
Required parts (choose one)			
· D16-10 Manual waste and overflow set for single bowl granite	Chrome	43927000	24.60
· D16-11 Automatic waste and overflow set for single bowl granite	Chrome	43937000	43.00
· D16-12 Automatic waste and overflow set for single bowl granite Select	Chrome	43947000	29.70
Optional parts:			
· F15 Cutting board walnut		40960000	122.90
· F16 Cutting board oak		40961000	92.20
NEW · F17 Mobile drainboard	Stainless Steel	40962800	80.00
NEW · F14 Multifunctional strainer	Matt Black	40963000	20.00
S510-U635 Under-mount sink 180/450	Graphiteblack	43433170	435.20
· material: SilicaTec	Stonegrey	43433290	435.20
· number of bowls: 1 main bowl and 1 additional bowl	Concretegrey	43433380	435.20
· sink depth: 190 mm			
· cut-out dimensions: 658 x 398 mm			
· cabinet size: 80 cm			
· type of installation: undermount			
· position overflow: on the right side of the main bowl			
Required parts (choose one)			
· D17-10 Manual waste and overflow set for double bowl granite	Chrome	43928000	41.00
· D17-11 Automatic waste and overflow set for double bowl granite	Chrome	43938000	66.60
· D17-12 Automatic waste and overflow set for double bowl granite Select	Chrome	43948000	47.10
Optional parts:			
· F15 Cutting board walnut		40960000	122.90
· F16 Cutting board oak		40961000	92.20
NEW · F17 Mobile drainboard	Stainless Steel	40962800	80.00
NEW · F14 Multifunctional strainer	Matt Black	40963000	20.00

Measurements within scale drawings are in mm.

Technical specifications and units of measure are subject to change.



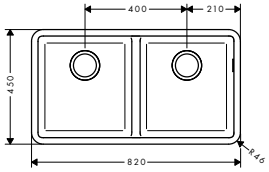

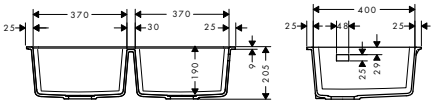

	finish	code no.	Euro
S510-U770 Under-mount sink 370/370	Graphiteblack	43434170	496.60
	Stonegrey	43434290	496.60
	Concretegrey	43434380	496.60
· material: SilicaTec			
· number of bowls: 2 main bowls			
· sink depth: 190 mm			
· cut-out dimensions: 763 x 398 mm			
· cabinet size: 90 cm			
· type of installation: undermount			
· position overflow: on the right side of the bowl			
Required parts (choose one)			
· D17-10 Manual waste and overflow set for double bowl granite	Chrome	43928000	41.00
· D17-11 Automatic waste and overflow set for double bowl granite	Chrome	43938000	66.60
· D17-12 Automatic waste and overflow set for double bowl granite Select	Chrome	43948000	47.10
Optional parts:			
· F15 Cutting board walnut		40960000	122.90
· F16 Cutting board oak		40961000	92.20
NEW · F17 Mobile drainboard	Stainless Steel	40962800	80.00
NEW · F14 Multifunctional strainer	Matt Black	40963000	20.00

Measurements within scale drawings are in mm.

Technical specifications and units of measure are subject to change.

Optional parts for stainless steel sinks

	finish	code no.	Euro
NEW  **D14-10 Manual waste and overflow set for single bowl** · consists of: waste and overflow set, screen basket, trap · drain system: drain operation via pushing/pulling screen basket · diameter 40 / 50 · 1 1/2" with space-saving drain pipe and odor trap · screen basket: 3 1/2"	Stainless Steel	43921800	24.70
NEW  **D15-10 Manual waste and overflow set for double bowl** · consists of: waste and overflow set, screen basket, trap · drain system: drain operation of main bowl and additional bowl via pushing/pulling screen basket · diameter 40 / 50 · 1 1/2" with space-saving drain pipe and odor trap · screen basket: 3 1/2"	Stainless Steel	43922800	41.20
NEW  **D14-11 Automatic waste and overflow set for single bowl** · consists of: waste and overflow set, pop-up waste set, trap · drain system: drain operation via turning pop-up handle · diameter 40 / 50 · 1 1/2" with space-saving drain pipe and odor trap · screen basket: 3 1/2"	Stainless Steel	43931800	43.20
NEW  **D15-11 Automatic waste and overflow set for double bowl** · consists of: waste and overflow set, pop-up waste set, trap · drain system: drain operation of main bowl via turning pop-up handle and additional bowl via pushing/pulling screen basket · diameter 40 / 50 · 1 1/2" with space-saving drain pipe and odor trap · screen basket: 3 1/2"	Stainless Steel	43932800	66.90
NEW  **D14-12 Automatic waste and overflow set for single bowl Select** · consists of: waste and overflow set, pop-up waste set, trap · drain system: drain operation via turning pop-up handle · diameter 40 / 50 · 1 1/2" with space-saving drain pipe and odor trap · screen basket: 3 1/2"	Stainless Steel	43941800	29.80
NEW  **D15-12 Automatic waste and overflow set for double bowl Select** · consists of: waste and overflow set, pop-up waste set, trap · drain system: drain operation of main bowl via turning pop-up handle and additional bowl via pushing/pulling screen basket · diameter 40 / 50 · 1 1/2" with space-saving drain pipe and odor trap · screen basket: 3 1/2"	Stainless Steel	43942800	47.30

Measurements within scale drawings are in mm.

Technical specifications and units of measure are subject to change.

Optional parts for granite sinks

	finish	code no.	Euro
	Chrome	43927000	24.60
D16-10 Manual waste and overflow set for single bowl granite · consists of: waste and overflow set, screen basket, trap · drain system: drain operation via pushing/pulling screen basket · diameter 40 / 50 · 1 1/2" with space-saving drain pipe and odor trap · screen basket: 3 1/2"			
	Chrome	43928000	41.00
D17-10 Manual waste and overflow set for double bowl granite · consists of: waste and overflow set, screen basket, trap · drain system: drain operation of main bowl and additional bowl via pushing/pulling screen basket · diameter 40 / 50 · 1 1/2" with space-saving drain pipe and odor trap · screen basket: 3 1/2"			
	Chrome	43937000	43.00
D16-11 Automatic waste and overflow set for single bowl granite · consists of: waste and overflow set, pop-up waste set, trap · drain system: drain operation via turning pop-up handle · diameter 40 / 50 · 1 1/2" with space-saving drain pipe and odor trap · screen basket: 3 1/2"			
	Chrome	43938000	66.60
D17-11 Automatic waste and overflow set for double bowl granite · consists of: waste and overflow set, pop-up waste set, trap · drain system: drain operation of main bowl via turning pop-up handle and additional bowl via pushing/pulling screen basket · diameter 40 / 50 · 1 1/2" with space-saving drain pipe and odor trap · screen basket: 3 1/2"			
	Chrome	43947000	29.70
D16-12 Automatic waste and overflow set for single bowl granite Select · consists of: waste and overflow set, pop-up waste set, trap · drain system: drain operation via turning pop-up handle · diameter 40 / 50 · 1 1/2" with space-saving drain pipe and odor trap · screen basket: 3 1/2"			

Measurements within scale drawings are in mm.

Technical specifications and units of measure are subject to change.

	finish	code no.	Euro
 **D17-12 Automatic waste and overflow set for double bowl granite Select** · consists of: waste and overflow set, pop-up waste set, trap · drain system: drain operation of main bowl via turning pop-up handle and additional bowl via pushing/pulling screen basket · diameter 40 / 50 · 1 1/2" with space-saving drain pipe and odor trap · screen basket: 3 1/2"	Chrome	43948000	47.10

Optional parts for built-in sinks and undermount sinks

A10 drain cover · stainless steel sinks with 3 ½" basket strainer 	Stainless Steel	40952800	11.60
A11 turning handle for eccentric operation · material: metal 	Stainless Steel Optic	40953800	16.90

Optional parts for built-in sinks

F10 Clamping element set 16 pieces for countertop thickness 1-3.5 cm · stainless steel sinks · clamping range: 10 - 35 mm		40950000	7.90
F11 Clamping element set 16 pieces for countertop thickness 3-5.5 cm · stainless steel sinks · clamping range: 30 - 55 mm		40951000	7.90

Measurements within scale drawings are in mm.

Technical specifications and units of measure are subject to change.

Optional parts for sBox



	finish	code no.	Euro
F12 compensating element for sBox · purpose of use: for height compensation of the sBox up to 100 mm		43333000	21.10

Kitchen accessories

	finish	code no.	Euro



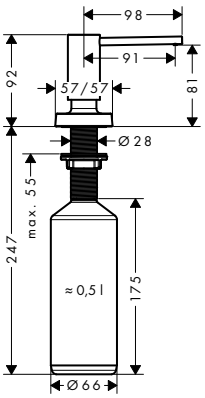

A71 soap-/ lotion dispenser
- suitable for matched design to selected kichen mixers
- projection 91 mm
- material: durable metal construction
- non-corroding outlet pipe
- filling capacity 500 ml
- dosage 2 ml
- easy to fill up from the top
- for installation in worktops up to 55 mm
- easy and save installation without tools needed
- mounting hole with 28 - 35 mm diameter needed

Chrome	40468000	76.80
Stainless Steel Finish	40468800	99.80



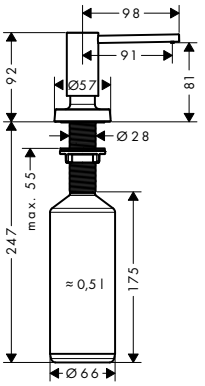

A51 soap-/ lotion dispenser
- suitable for matched design to selected kichen mixers
- projection 91 mm
- material: durable metal construction
- non-corroding outlet pipe
- filling capacity 500 ml
- dosage 2 ml
- easy to fill up from the top
- for installation in worktops up to 55 mm
- easy and save installation without tools needed
- mounting hole with 28 - 35 mm diameter needed

Chrome	40448000	76.80
Stainless Steel Finish	40448800	99.80



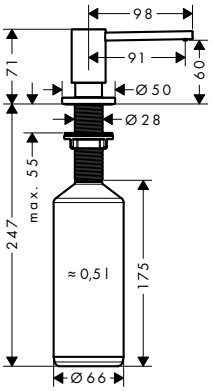

A41 soap-/ lotion dispenser
- suitable for matched design to selected kichen mixers
- projection 91 mm
- material: durable metal construction
- non-corroding outlet pipe
- filling capacity 500 ml
- dosage 2 ml
- easy to fill up from the top
- for installation in worktops up to 55 mm
- easy and save installation without tools needed
- mounting hole with 28 - 35 mm diameter needed

Chrome	40438000	56.30
Stainless Steel Finish	40438800	73.20



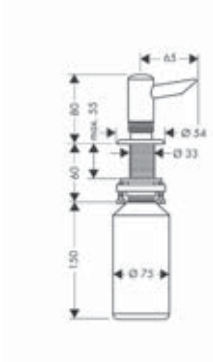

Soap-/ lotion dispenser
- material: metal
- filling capacity 300 ml

Chrome	40418000	100.50
Stainless Steel Finish	40418800	150.70

Measurements within scale drawings are in mm.

Technical specifications and units of measure are subject to change.

		finish	code no.	Euro
	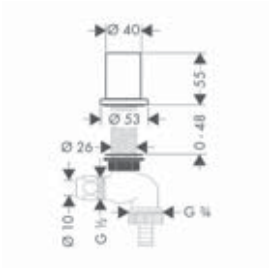	**Kitchen device shut-off valve** · purpose of use: for counter surfaces up to 47 mm thick · shaft Ø 27 mm · non-return valve · connection dimension DN15 · device connection DN20	Chrome Stainless Steel Finish	10823000 10823800	137.40 206.10
	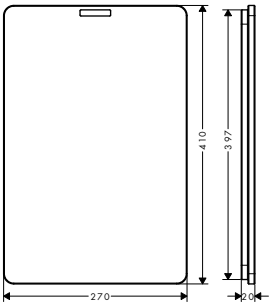	**F15 Cutting board walnut** · perfect to work in and outside of the sink · suitable for S51 silicaTec sinks, S71 stainless steel sinks · material: walnut		40960000	122.90
	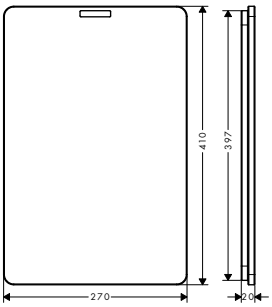	**F16 Cutting board oak** · perfect to work in and outside of the sink · suitable for S51 silicaTec sinks, S71 stainless steel sinks · material: oak		40961000	92.20
NEW 	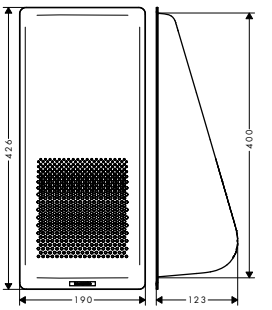	**F14 Multifunctional strainer** · ideal to clean fruits and vegetables or to pour out noodles · suitable for S51 silicaTec sinks, S71 stainless steel sinks · material: plastic	Matt Black	40963000	20.00
NEW 	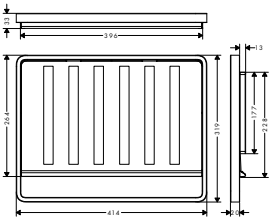	**F17 Mobile drainboard** · perfect to unfreeze food · for safe storage of glasses and bulky dishes · high functionality, water can run off easily into the sink · suitable for S51 silicaTec sinks, S71 stainless steel sinks · material: plastic/stainless steel	Stainless Steel	40962800	80.00
NEW		**F18 Cleaning and care spray stainless steel 250 ml** · Pump spray 250 ml · Cleaning and maintaining in one step · Finger print protection · Ideal for kitchen sinks and faucets		40964000	14.00 **available from February 2020**

Measurements within scale drawings are in mm.

Technical specifications and units of measure are subject to change.

	finish	code no.	Euro
NEW	**F19 Cleaning and care spray stainless steel 30 ml** · Pump spray 30 ml · Cleaning and maintaining in one step · Finger print protection · Ideal for kitchen sinks and faucets	40966000	4.50 **available from February 2020**
NEW	**F20 Cleaning and care set SilicaTec** · Pump spray 250 ml limescale remover · Removes limescale and bloom from the sink · Pump spray 250 ml impregnation spray · Protection from dirt, stains and limescale · Supports an easier cleaning of the sink · Cleaning sponge (package of 2)	40965000	23.00 **available from February 2020**

Measurements within scale drawings are in mm.

Technical specifications and units of measure are subject to change.

Spare parts and accessories for showers, bath mixers and kitchen mixers





Shower hose	page 536		Showers	page 536	
Shower holder and slider	page 536		Soap dishes and shampoo holder	page 537	
Covers	page 539		Service sets for showers	page 540	
Wall bar spacers	page 540				
Cartridges	page 543		Spray former/ aerators	page 544	
Diverters	page 545		Shut-off units and thermostatic cartridges	page 546	
Handles	page 547		Escutcheons and flanges	page 550	

Shower hose



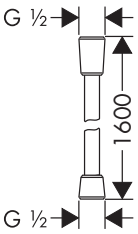

	finish	code no.	Euro
Isiflex Shower hose 160 cm			
· high-quality shower hose	Chrome	28276000	25.00
· with plastic coating, easy to clean	Chrome/Blue	28276030	41.50
· shower hose length: 1.60 m	Chrome/Black	28276060	41.50
· pivot connectors prevent hose from tangling	Chrome/Gold Optic	28276090	51.10
· kink-protected	**NEW** Brushed Bronze	28276140	37.50
	Brushed Black	28276340	37.50
	NEW Chrome		
	Red	28276430	41.50
	White	28276450	31.30
	Grey	28276460	41.50
	Yellow	28276480	41.50
	Black	28276610	41.50
	Aranja	28276650	51.10
	NEW Matt Black	28276670	35.00
	Aranja/Goldoptic	28276680	62.40
	NEW Matt White	28276700	35.00
	Stainless Steel Optic	28276800	37.50
	Satinox	28276810	41.50
	Satin Chrome	28276880	41.50
	NEW Polished Gold Optic	28276990	37.50
Alternative sizes:			
· Isiflex Shower hose 125 cm	Chrome	28272000	23.10
	White	28272450	29.00
· Isiflex Shower hose 200 cm	Chrome	28274000	26.60

Showers



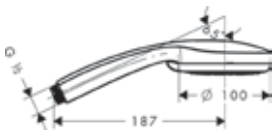

Croma 100 Hand shower Multi	Chrome	28536000	62.40
· shower head size: 100 mm	Blue	28536330	90.50
· spray type adjustment by turning spray disc	Red	28536430	90.50
	White	28536450	90.50
· spray type: Rain, MonoRain, Massage spray	Grey	28536460	90.50
	Yellow	28536480	90.50
· flow rate at 3 bar: 19 l/ min	Black	28536610	90.50
· with internal water conduction	Green (Flash)	28536710	90.50
· rinseable dirt filter	Satinox	28536810	90.50
· connection thread G ½	Satin Chrome	28536880	90.50
· connection dimension: DN15			
· suitable for continous flow water heaters			
Water saving EcoSmart version:			
· Croma 100 Hand shower Multi EcoSmart 9 l/ min	Chrome	28538000	66.90

Shower holder and sliders



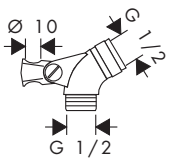

Universal joint for Unica	Chrome	28650000	16.30
· dimension: G ½			



Support for Unica'88 wall bar Ø 22 mm	Chrome	28672000	26.10
	White	28672450	51.10
· diameter: 22 mm	Satin Chrome	28672880	41.50



Support for Unica'E wall bar (satinchrome)	Satin Chrome	96170000	51.10

Measurements within scale drawings are in mm.

Technical specifications and units of measure are subject to change.

		finish	code no.	Euro
	**Support for Unica'A wall bar**	Chrome Fine Brass Satin Chrome	96195000 96195840 96195880	90.50 181.00 147.80
	**Slider for Unica'D shower bar** · diameter: 25 mm	Chrome Blue Red White Grey Yellow Black Mint Fine Brass Satin Chrome	96190000 96190330 96190430 96190450 96190460 96190480 96190610 96190770 96190840 96190880	51.10 62.40 62.40 62.40 62.40 62.40 62.40 62.40 90.50 62.40
	**Slider for Pharo shower panel Comfort Plus**	Satin Chrome	25968000	51.10
	**Support for Unica' B wall bar** · diameter: 22 mm	Topas Translucent Blue Fine Brass Satin Chrome	95065520 95065530 95065840 95065880	51.10 51.10 72.70 51.10
	**Support for Unica Raindance wall bar**	Chrome	97117000	51.10
	**Support for Rainbow wall bar** · diameter: 25 mm	Chrome	97336000	62.40

Soap dishes and shampoo holder

 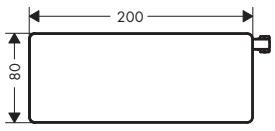	**Casetta Soap dish E** · Unica E · length 200 mm · material: flat aluminium profile with safety glass finish · shelf finish: chrome, white or black	Chrome White/Chrome Black/Chrome	26511000 26511400 26511600	63.20 63.20 63.20
 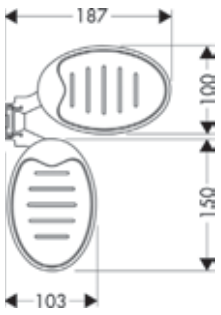	**Casetta Soap dishes Raindance** · material: plastic	Chrome	28698000	72.80

Measurements within scale drawings are in mm.

Technical specifications and units of measure are subject to change.

Spare parts and accessories for showers, bath mixers and kitchen mixers

		finish	code no.	Euro
	**Casetta Soap dish C** · purpose of use: for shower bars with Ø 22 mm · removable	Chrome	28678000	14.50
	**Casetta Soap dish E** · purpose of use: for shower bars with Ø 18 / 22 / 25 mm · material: plastic · removable	Chrome	26519000	18.40
	**Casetta Soap dishes Unica 88** · self-draining soap dish for Unica S and C wallbars · purpose of use: for shower bars with Ø 22 mm · material: transparent plastic	Transparent	28675000	26.10
	**Casetta Soap dish S** · material: transparent plastic · removable	Transparent	28684000	14.50
	**Casetta soap dish for Unica'E/ Unica'F wall bar**	Transparent	28685000	26.10
	**Clips Ø 25 mm for Casetta'D soap dishes** · diameter: 25 mm · packaging unit = 2 pieces	Transparent	96192000	6.10
	**Clip for Casetta'E soap dish** · packaging unit = 1 pieces	Transparent	96193000	3.70

Measurements within scale drawings are in mm.

Technical specifications and units of measure are subject to change.

	finish	code no.	Euro
 **Clips for Casetta'F soap dishes** · packaging unit = 2 pieces	Transparent	96194000	6.10
 **Clip Ø 18 mm for Casetta Unica standard soap dishes** · diameter: 18 mm · packaging unit = 1 pieces	Transparent	96188000	3.70
 **Clip Ø 22 mm for Casetta Unica'88 and Casetta Unica'S soap dishes** · packaging unit = 1 pieces		96189000	3.70
 **Shampoo holder and cover for Unica'E wall bar**	White Fine Brass Satin Chrome	96177450 96177840 96177880	13.20 32.30 13.20
 **Shampoo holder and cover for Unica'F wall bar**	Satin Chrome Fine Brass Satin Chrome	96187000 96187840 96187880	10.10 26.10 20.40
Covers			
 **Cover for Unica'A wall bar** · packaging unit = 2 pieces	Chrome	96272000	16.30
 **Wall support and cover for Unica'88 wall bar** · for wall bars with a diameter of 22 mm	Chrome White Satin Chrome	92109000 92109450 92109880	26.10 32.30 32.30
 **Covers for Unica'88 wall bar**	Chrome	92107000	13.20
 **Cover for Unica'88 wall bar** · wall bar Ø 22 mm · packaging unit = 2 pieces	Chrome	94053000	13.20
 **Cover for Unica'B wall bar** · wall bar Ø 22 mm	Chrome	95064000	13.20
 **Covers for Unica'D wall bar** · wall bar Ø 25 mm · packaging unit = 2 pieces	Chrome	94055000	13.20
 **Covers for Unica'S wall bar** · wall bar Ø 22 mm · packaging unit = 2 pieces	Chrome	94051000	10.10

Measurements within scale drawings are in mm.

Spare parts and accessories for showers, bath mixers and kitchen mixers

	finish	code no.	Euro
 **Wall support and cover for Unica'S wall bar** · for wall bars with a diameter of 22 mm	Chrome White	96191000 96191450	16.30 20.40
 **Covers for Raindance wall bar**		97116000	41.50

Service sets for showers

 **Service set for Selecta Novo hand shower**		92018000	13.20
 **Service set for Aktiva hand shower**		92027000	20.40
 **Service set for Team Compact overhead shower**		92017000	32.30

Wall bar spacers

  **Wall bar spacer** · material: plastic	Chrome	98681000	13.20
  **Wall bar spacer for Unica wall bar D** · material: plastic	Chrome	96186000	8.00
 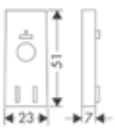 **Wall bar spacer** · material: plastic	Chrome	97450000	8.00

Measurements within scale drawings are in mm.

Technical specifications and units of measure are subject to change.

	finish	code no.	Euro
  **Wall bar spacer for Unica wall bar S** · material: plastic	Chrome	96184000	7.50

Other shower spare parts

 **Hose seal**		98058000	2.30
 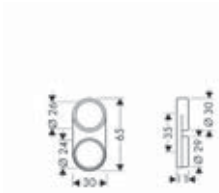 **Hose duct** · material: transparent plastic	Transparent	28072000	4.00
Rising pipe for Showerpipe · length: 1,450 mm · diameter: 22 mm · pipe can be shortened	Chrome	96770000	181.00
 **Water saving set for Croma hand shower**		96708000	6.10
 **Water saving set** · material: plastic		92019000	3.70
 **Mounting set for Unica wall bars**		96179000	8.20
 **Hose connection for Ecostat thermostatic shower mixer for exposed installation**		98556000	20.40
 **Filter packing**		94246000	2.30

Measurements within scale drawings are in mm.

Technical specifications and units of measure are subject to change.

	finish	code no.	Euro
Rim mounted adapter 25° · dimension: G ½	Chrome	28071000	26.10



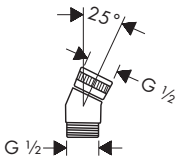

Measurements within scale drawings are in mm.

Technical specifications and units of measure are subject to change.

Cartridges

		finish	code no.	Euro
	**Ceramic cartridge complete M3/ M2**		92730000	41.50
	**Cartridge complete without mouth spray connection unit** · for washbasin mixers, bidet mixers and single lever kitchen mixers		14095000	72.70
	**Cartridge complete with mouth spray connection unit** · for washbasin mixers with ball mixing system		14098000	72.70
	**Cartridge complete for mixers for vented hot water cylinders** · for washbasin mixers with ball mixing system		14097000	72.70
	**Ball cartrigde complete** · for bath and shower mixers		14096000	72.70
	**Service set** · service key part of delivery · for mixers with ball mixing systems		13952000	26.10
	**Service set without service key**		98804000	20.40
	**Mixer ball without mouth spray connection unit** · for mixers with ball mixing systems		13964000	32.30
	**Mixer ball with mouth spray connection unit** · for washbasin mixers with ball mixing system		13097000	32.30
	**Joystick cartridge complete for AXOR mixer**		96339000	51.10
	**Cartridge complete with handle for AXOR Starck Classic mixer**	Chrome	94004000	117.40
	**Cartridge complete with handle for AXOR Starck kitchen mixer**		95052000	72.70

Measurements within scale drawings are in mm.

Technical specifications and units of measure are subject to change.

Mixer spare parts and accessories

		finish	code no.	Euro
	**Sealing set for AXOR Starck kitchen mixer with swivel spout**		95053000	20.40
	**Sealing set for Allegra kitchen mixer with swivel spout**		96529000	13.20
	**Sealing set for Allegra Linea/ Allegra Solida kitchen mixer with swivel spout**		94850000	16.30
	**Cartridge for AXOR Arco mixer**		11095000	72.70
	**Service set for pillar tap**		94156000	13.20
Spray former/ aerators				
	**Aerator M24x1 with water dimmer 7 l/ min** · thread dimension: M24x1 · flow rate: 7 l/ min · usage: bathroom mixer	Chrome Satinox	13085000 13085810	8.20 10.10
	**Spray former M24x1 pressureless** · thread dimension: M24x1	Chrome	94033000	6.10
	**Aerator M28x1 without water dimmer for bath spout and bath mixer** · thread dimension: M28x1 · flow rate: 25 l/ min · usage: bathroom mixer	Chrome	13485000	13.20
	**QuickClean aerator M24x1 with water dimmer 7 l/ min** · thread dimension: M24x1 · flow rate: 5 l/ min · packaging unit = 10 pieces	Chrome	13912000	12.90
	**SoftJet Aerator set M24x1 with water dimmer 5 l/ min** · thread dimension: M24x1 · packaging unit = 2 pieces		13182000	11.50

Measurements within scale drawings are in mm.

Technical specifications and units of measure are subject to change.

		finish	code no.	Euro
	**QuickClean aerator M24x1 without water dimmer for kitchen mixer** · thread dimension: M24x1 · flow rate: 15 l/ min · usage: kitchen mixer · packaging unit = 10 pieces	Chrome	13913000	10.10
	**QuickClean aerator M24x1 without water dimmer for bath spout** · thread dimension: M24x1 · flow rate: 25 l/ min · usage: bathroom mixer	Chrome	13914000	10.30
	**Aerator M24 x 1 with water dimmer 7 l/ min for AXOR Starck/ AXOR Starck Classic basin mixer** · thread dimension: M24x1 · flow rate: 7 l/ min · usage: bathroom mixer	Chrome	94005000	16.30
	**Flood jet spray former for AXOR Starck X mixer**		97462000	26.10
	**Laminar spray former for AXOR Starck X mixer** · spray type: laminar spray · flowrate: 7 l/ min · for bathroom mixer		98610000	26.10
	**Spout complete for AXOR Arco mixer** · rotatable spout	Chrome	11098000	62.40
	**Interior spout for AXOR Arco mixer**		94183000	26.10
Diverters				
	**Diverter for bath mixer for concealed installation** · <05/87		13970000	51.10
	**Diverter complete for bath and shower mixer for concealed installation from 06/1987** · >06/87	Chrome	13971000	62.40
	**Diverter complete for AXOR mixer for concealed installation with pipe interrupter**	Chrome	13473000	72.70

Measurements within scale drawings are in mm.

Technical specifications and units of measure are subject to change.

		finish	code no.	Euro
	**Diverter for bath mixer for concealed installation with iBox universal**	Chrome	95014000	41.50
	**Diverter complete for bath mixer for exposed installation wall-mounted**		94077000	26.10
Shut-off units and thermostatic cartridges				
	**Shut-off unit spindle** · spindle · DN15 · right closing		94142000	20.40
	**Ceramic shut-off unit right-closing** · ceramic · DN15 · right closing · closing angle: 90°		94009000	26.10
	**Ceramic shut-off unit left-closing** · ceramic · DN15 · left closing · closing angle: 90°		94008000	26.10
	**Shut-off unit with ceramic valves** · ceramic · DN15 · right closing · closing angle: 180°		94149000	20.40
	**Non-return valve for thermostatic mixer**		92605000	26.10
	**Temperature cartridge for thermostatic mixer DN15** · DN15 · wax capsule		92601000	117.40
	**Temperature cartridge for thermostatic mixer DN20** · DN20 · wax capsule		92631000	181.00
	**MTC temperature control unit for thermostatic mixer** · wax capsule		94282000	90.50
	**Temperature control unit for Ecostat 2001 thermostatic mixer for exposed installation** · 05/91 - 09/99		94141000	117.40
	**Temperature control unit for Ecostat 5001 thermostatic mixer for exposed installation** · 06/97 - 05/01		94283000	181.00

Measurements within scale drawings are in mm.

Technical specifications and units of measure are subject to change.

		finish	code no.	Euro
	**Plastic screw and filter for valve**		97592000	16.30
Handles				
	**Handle for Allegra Metropol kitchen mixer** · handle type: handle · type of fixation: screwed	Chrome	14890000	51.10
	**Handle for Allegra Linea/ Solida kitchen mixer**	Chrome	14891000	51.10
	**Handle for Allegra Premia kitchen mixer**	Chrome	16891000	72.70
	**Handle for Allegra Elegance kitchen mixer**	Chrome	33891000	41.50
	**Handle for Allegra Slim kitchen mixer**	Chrome	31991000	41.50
	**Handle for Mondial mixer** · handle type: handle · type of fixation: screwed	Chrome	15091000	72.70
	**Handle for Metropol mixer**	Chrome	14091000	51.10
	**Handle for Metris mixer**	Chrome	31091000	41.50
	**Handle for Talis S mixer** · handle type: handle · type of fixation: screwed	Chrome	32092000	41.50
	**Handle for Talis S basin mixer with (high) swivel spout**	Chrome	32095000	41.50
	**Handle for Talis E mixer**	Chrome	33091000	41.50

Measurements within scale drawings are in mm.

Technical specifications and units of measure are subject to change.

Mixer spare parts and accessories

		finish	code no.	Euro
	**Handle for Focus S mixer** · handle type: handle · type of fixation: screwed	Chrome	31793000	32.30
	**Handle for Focus E mixer** · handle type: handle · type of fixation: screwed	Chrome	31791000	32.30
	**Handle for AXOR Uno Color basin-, bidet- and kitchen mixer** · handle type: handle · type of fixation: screwed	Blue Red White Yellow Black	13290330 13290430 13290450 13290480 13290610	32.30 32.30 32.30 32.30 32.30
	**Handle for AXOR Uno Color bath- and shower mixer** · handle type: handle · type of fixation: screwed	Blue Red White Yellow Black	13690330 13690430 13690450 13690480 13690610	32.30 32.30 32.30 32.30 32.30
	**Handle for AXOR Allegroh mixer** · handle type: handle · type of fixation: screwed	Chrome	16092000	90.50
	**Handle for AXOR Starck Puro kitchen mixer** · handle type: handle · type of fixation: screwed	Chrome	10891000	51.10
	**Handle for AXOR Starck kitchen mixer** · handle type: handle · type of fixation: screwed	Chrome	10890000	51.10
	**Handle for AXOR Starck Puro bath- and shower mixer for exposed installation**	Chrome	10490000	72.70
	**Handle for AXOR Steel kitchen mixer**	Stainless Steel	35891800	117.40
	**Handle for AXOR Uno kitchen mixer** · handle type: handle · type of fixation: screwed	Chrome	14896000	51.10

Measurements within scale drawings are in mm.

Technical specifications and units of measure are subject to change.

		finish	code no.	Euro
	**Handle for AXOR Allegroh thermostatic mixer for concealed installation** · handle type: handle for thermostat · type of fixation: screwed	Chrome	16391000	41.50
	**Handle for AXOR Allegroh shut-off valve for concealed installation** · handle type: handle for shut off unit · type of fixation: snapped	Chrome	16991000	41.50
	**Handle for AXOR Allegroh Trio/ Quattro shut-off/ diverter valve for concealed installation**	Chrome	16993000	41.50
	**Handle for AXOR Allegroh Novo thermostatic mixer for concealed installation**	Chrome	36391000	72.70
	**Handle for AXOR Allegroh Novo shut-off valve for concealed installation** · handle type: handle for shut off unit · type of fixation: snapped	Chrome	36991000	41.50
	**Handle for Ecostat 1001 sL thermostatic mixer for exposed installation**	Chrome	96618000	20.40
	**Push button set for Ecostat 1001 thermostatic mixer for exposed installation**	Grey	97231000	13.20
	**Handle for Excentra Fill/ Flexaplus**	Chrome	96083000	20.40
Pull-out sprays				
	**Pull-out spray for Allegroh kitchen mixer**	Chrome White	13893000 13893450	90.50 90.50
	**Pull-out spray for Allegra Linea/ Allegra Metropol kitchen mixer**	Chrome	14893000	90.50
	**Pull-out spray for Talis S² Variarc kitchen mixer**	Chrome	96920000	72.70
	**Pull-out spout for Talis S² Variarc kitchen mixer**	Chrome	96919000	51.10

Measurements within scale drawings are in mm.

Mixer spare parts and accessories

		finish	code no.	Euro
	**Pull-out spray for AXOR Steel kitchen mixer**	Stainless Steel	35893800	181.00
Escutcheons and flanges				
	**Escutcheon for AXOR Allegroh shower mixer for concealed installation**	Chrome	94272000	51.10
	**Flange for Metropol basin mixer**	Chrome	94130000	13.20
	**Flange for bath mixer for concealed installation**	Chrome	13981000	32.30
	**Wall escutcheon for AXOR Uno bath- and shower mixer for exposed installation** · dimension: Ø 68 mm	Chrome	96467000	13.20
	**Wall escutcheon for Metropol bath mixer for exposed installation**	Chrome	94135000	8.20
Mixer accessories				
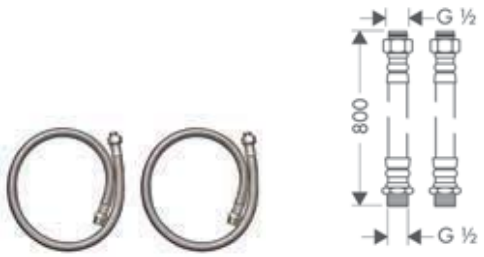	**Connection tube set for 2-hole rim mounted thermostatic bath mixer**		96387000	51.30
	**Flexible connection tube 80 cm** · length 800 mm · version: 90° angle		58192000	104.50
	**Connection tube for 2-hole rim mounted thermostatic bath mixer** · length: 600 mm · thread dimension: G ½ x G ½		96396000	27.80

Measurements within scale drawings are in mm.

Technical specifications and units of measure are subject to change.

Other mixer spare parts

		finish	code no.	Euro
	**Screw cover**	Chrome	94063000	6.10
	**Connection hose for shower column M10 x G ⅜** · length: 450 mm · thread dimension: M10 x G ⅜		96507000	26.10
	**Connection hose 450 mm for plugging** · length: 450 mm · thread dimension: M8 x G ⅜		94076000	20.40
	**Diverter knob for bath mixer for exposed installation**	Chrome	94078000	10.10
 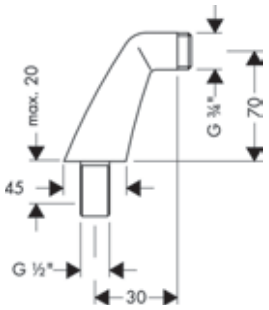	**Pillar unions for rim mounted bath mixer**	Chrome	14920000	118.80
	**Adapter piece with screw for handle fixation**		94184000	3.70
	**Non-return valve** · packaging unit = 2 pieces		94074000	10.10
	**Dirt filter for Ecostat thermostatic mixer**		95039000	3.70
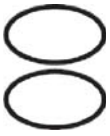	**Sealing set for Allegra Linea/ Allegra Solida kitchen mixer with swivel spout**		94850000	16.30
 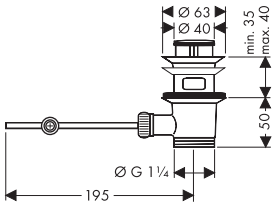	**Waste set pop-up for basin and bidet mixers** · operation via pull-rod · for basins with overflow hole · brass · drain plug material brass · connection dimension G 1¼	Chrome	94139000	60.70

Measurements within scale drawings are in mm.

Technical specifications and units of measure are subject to change.

Mixer spare parts and accessories

	finish	code no.	Euro
 **Converter complete**		96100000	3.70
 **Lever arm 340 mm**		96324000	16.30
Pull-rod complete	Chrome White	92620000 92620450	20.40 32.30
 **Pull-rod universal**	Chrome Stainless Steel	96657000 96657800	8.20 16.30
 **Fixation set complete**		96016000	20.40
  **Shaft fixation set for mixer** · diameter: 32 mm · thread dimension: M33x1.5		13961000	16.30
 **Special ball-S-union set**		13988000	90.50
 **Ball-S-union set** · centre distance: 150 ± 16 mm · packaging unit = 2 pieces · thread dimension: G ½ x M36x1.5		13989000	26.10
 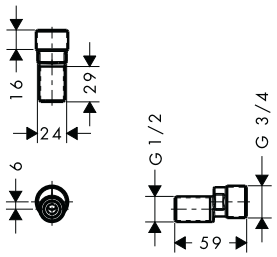 **S-union set**		94140000	32.30
 **O-ring 35 x 2.5 mm**		96006000	2.30

Measurements within scale drawings are in mm.

Technical specifications and units of measure are subject to change.

		finish	code no.	Euro
	**O-ring 48 x 7.25 mm**		98003000	2.30
	**O-ring 36 x 3.5 mm**		98066000	2.30
	**O-ring 34 x 3 mm**		98069000	2.30
	**Seal DN32**		53971000	2.30
	**Wedge-shaped seal DN32**		53985000	2.30
	**Nylon hose for kitchen mixer 1.25 m**		95048000	51.10
	**Metal hose for kitchen mixer**		96200000	41.50
	**Secuflex metal shower hose for 3-hole rim mounted/ tile mounted bath mixer**		94129000	62.40
	**Secuflex metal shower hose for 4-hole rim mounted/ tile mounted bath mixer** · length: 2,000 mm · maximum pull-out length : 1,100 mm · thread dimension: G ½ x G ½		94148000	51.10
 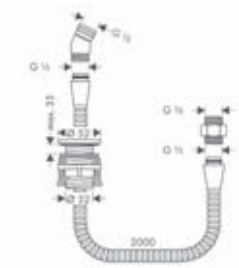	**Shower holder rim mounted** · consists of: shower holder, shower hose · maintenance opening required	Chrome	28307000	99.10

Measurements within scale drawings are in mm.

Technical specifications and units of measure are subject to change.

Mixer spare parts and accessories

		finish	code no.	Euro
	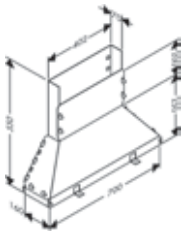	**Secuflex box**	28389000	41.50
	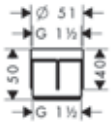	**Secuflex insert extension**	98806000	3.70
		**Fixing set for shut-off valve for concealed installation**	96392000	20.40
		**Thumb plug complete** Chrome White Satin Chrome	 96026000 96026450 96026880	 16.30 26.10 20.40
		**Thumb plug large** Chrome Stainless Steel	 96027000 96027800	 16.30 26.10
		**Safety plug for Excentra Fill/ Flexaplus** Chrome	 96153000	 20.40
	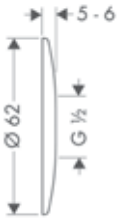	**Wall flange** · material: brass · connection dimension DN15 · packaging unit: 100 pieces Chrome	 06010000	 2.40
		**Hose connection for Ecostat thermostatic shower mixer for exposed installation**	98556000	20.40

Measurements within scale drawings are in mm.

Technical specifications and units of measure are subject to change.

Flow diagrams

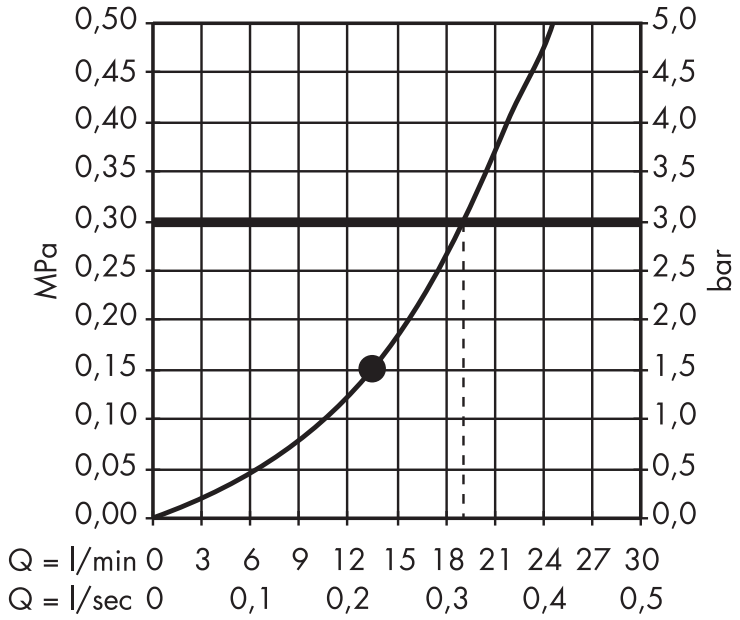

Hand showers	page 556	Overhead showers	page 562
Body showers	page 574	Showerpipes and shower panels	page 574

The consumption was measured in combination with the appropriate fittings (thermostat/mixer/in-wall valve) to reflect actual application in practice.

Hand showers

· Rainfinity Hand shower 130 3jet
 # 26864000, 26864140, 26864340, 26864670, 26864700, 26864990

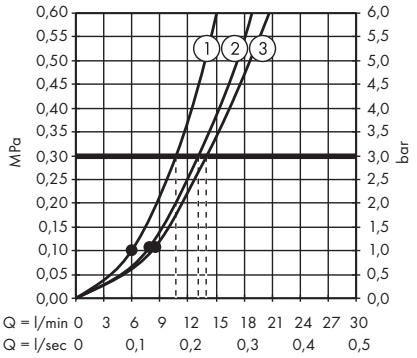

1. Mono
2. Intense PowderRain
3. PowderRain

· Rainfinity Hand shower 130 3jet EcoSmart
 # 26865000, 26865140, 26865340, 26865670, 26865700, 26865990

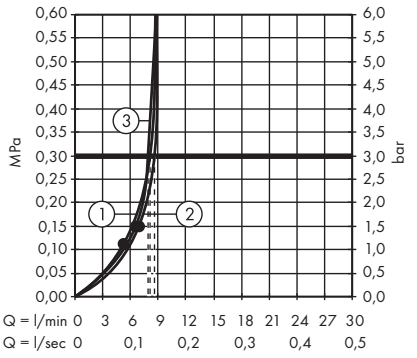

1. Mono
2. Intense PowderRain
3. IntenseRain

· Rainfinity Baton hand shower 100 1jet
 # 26866000, 26866140, 26866340, 26866670, 26866700, 26866990

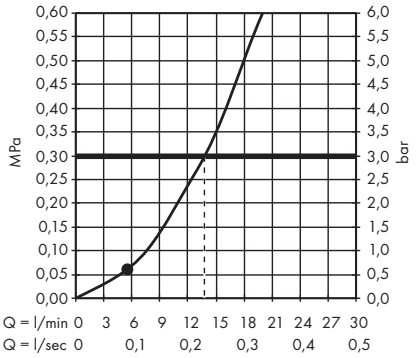

· Rainfinity Baton hand shower 100 1jet EcoSmart
 # 26867000, 26867140, 26867340, 26867670, 26867700, 26867990

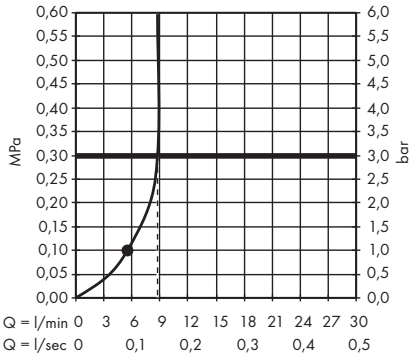

· Raindance Select E Hand shower 150 3jet
 # 26550000, 26550400

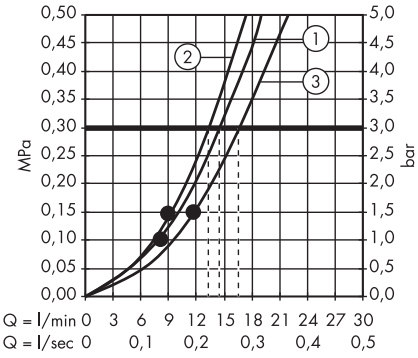

1. RainAir
2. CaresseAir
3. Mix

· Raindance Select E Hand shower 150 3jet EcoSmart 9 l/ min
 # 26551000, 26551400

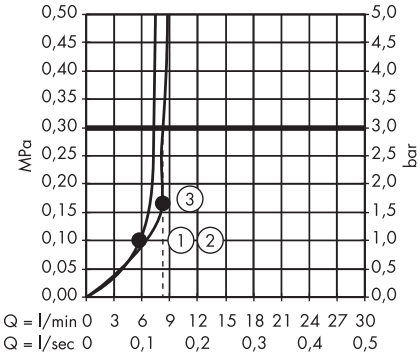

1. RainAir
2. CaresseAir
3. Mix

· Raindance Select E Hand shower 120 3jet
 # 26520000, 26520140, 26520340, 26520400, 26520670, 26520700, 26520990

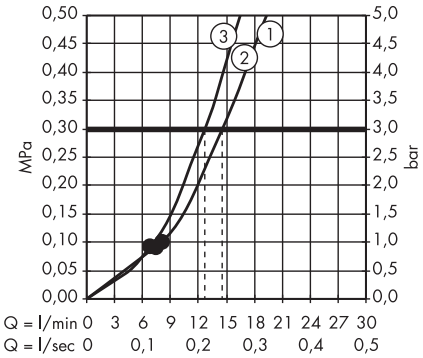

1. RainAir
2. Rain
3. WhirlAir

· Raindance Select E Hand shower 120 3jet EcoSmart 9 l/ min
 # 26521000, 26521400

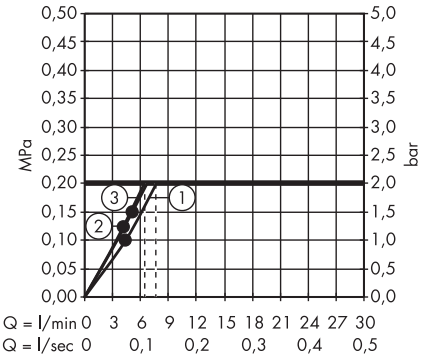

1. RainAir
2. WhirlAir
3. Rain

· Raindance Select S Hand shower 150 3jet
 # 28587000, 28587400

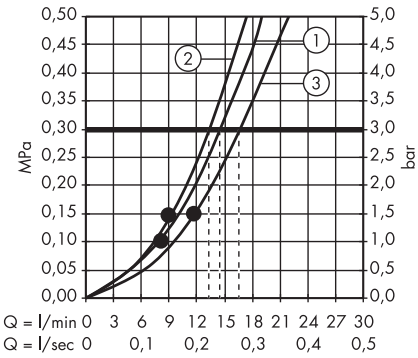

1. RainAir
2. CaresseAir
3. Mix

· Raindance Select S Hand shower 150 3jet EcoSmart 9 l/ min
 # 28588000, 28588400

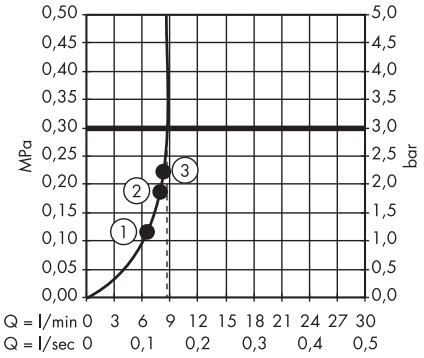

1. RainAir
2. CaresseAir
3. Mix

· Raindance Select S Hand shower 120 3jet PowderRain
 # 26014000

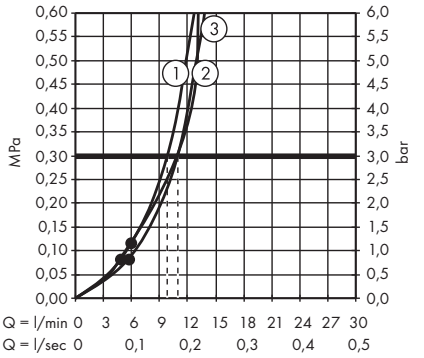

1. WhirlAir
2. PowderRain
3. Rain

· Raindance Select S Hand shower 120 3jet
 # 26530000, 26530140, 26530340, 26530400, 26530670, 26530700, 26530990

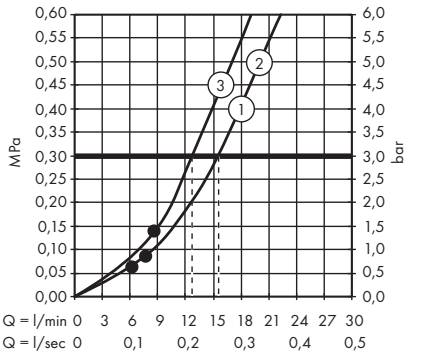

1. RainAir
2. Rain
3. WhirlAir

· Raindance Select S Hand shower 120 3jet EcoSmart 9 l/ min
 # 26531XXX

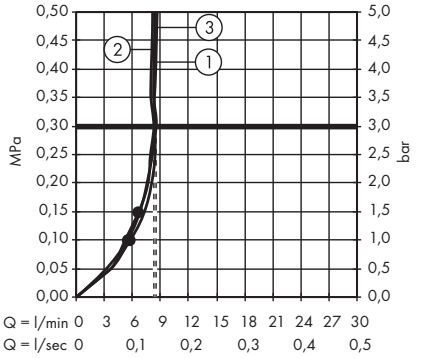

1. RainAir
2. WhirlAir
3. Rain

· Croma Select E Hand shower Multi
 # 26810400

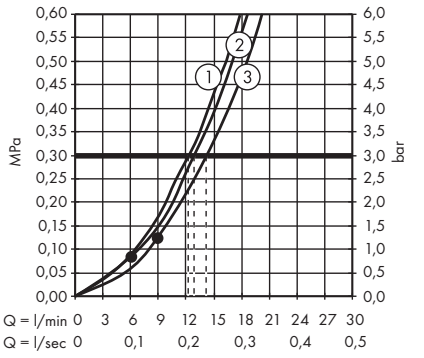

1. Massage
2. IntenseRain
3. SoftRain

· Croma Select E Hand shower Multi EcoSmart 9 l/ min
 # 26811400

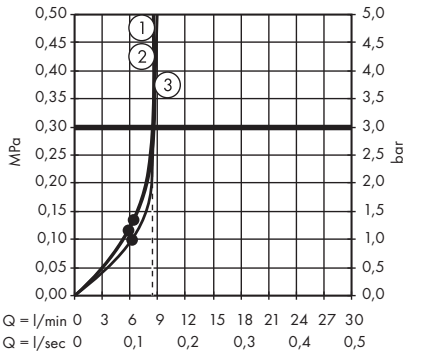

1. IntenseRain
2. Massage
3. SoftRain

· Croma Select E Hand shower Vario
 # 26812400

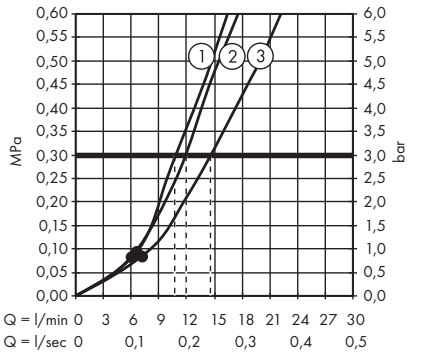

1. TurboRain
2. IntenseRain
3. Rain

· Croma Select E Hand shower Vario EcoSmart 9 l/ min
 # 26813400

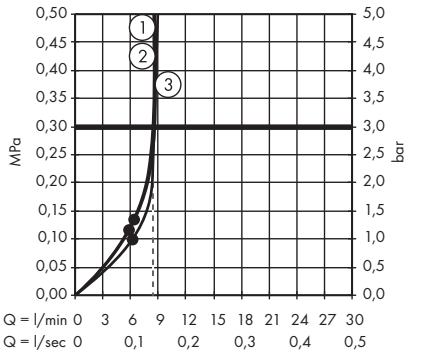

1. TurboRain
2. IntenseRain
3. Rain

· Croma Select E Hand shower 1jet
 # 26814400

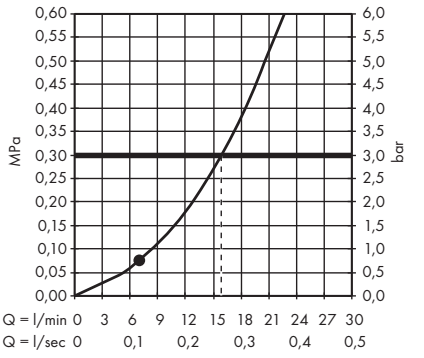

The consumption was measured in combination with the appropriate fittings (thermostat/mixer/in-wall valve) to reflect actual application in practice.

· Croma Select E Hand shower 1jet EcoSmart 9 l/ min
 # 26815400

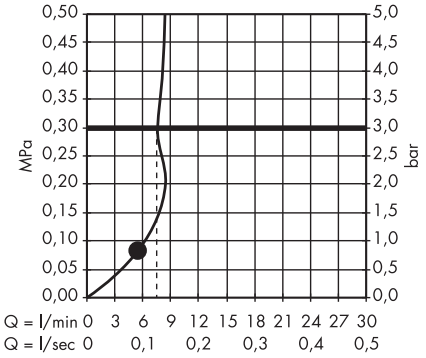

· Croma Select E Hand shower 1jet EcoSmart 7 l/ min
 # 26816400

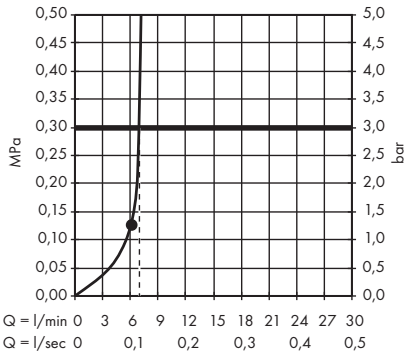

· Croma Select S Hand shower Multi
 # 26800400

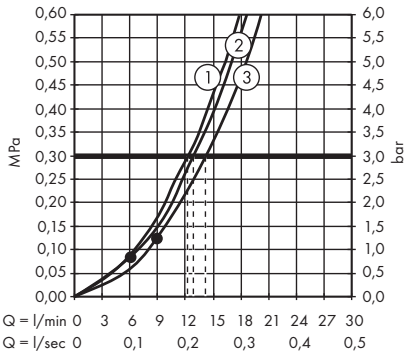

1. Massage
2. IntenseRain
3. SoftRain

· Croma Select S Hand shower Multi EcoSmart 9 l/ min
 # 26801400

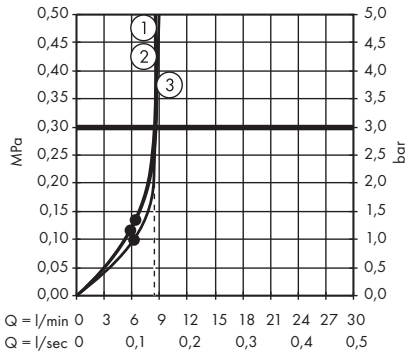

1. IntenseRain
2. Massage
3. SoftRain

· Croma Select S Hand shower Vario
 # 26802400

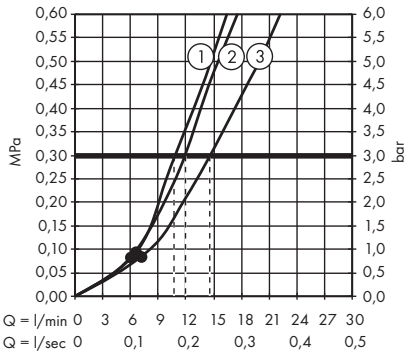

1. TurboRain
2. IntenseRain
3. Rain

· Croma Select S Hand shower Vario EcoSmart 9 l/ min
 # 26803400

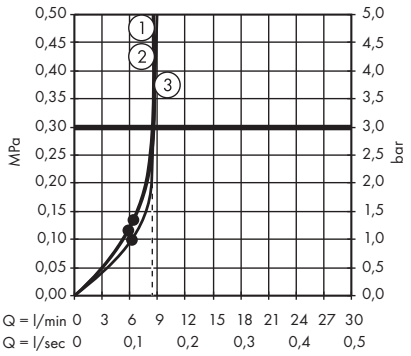

1. TurboRain
2. IntenseRain
3. Rain

· Croma Select S Hand shower 1jet
 # 26804400

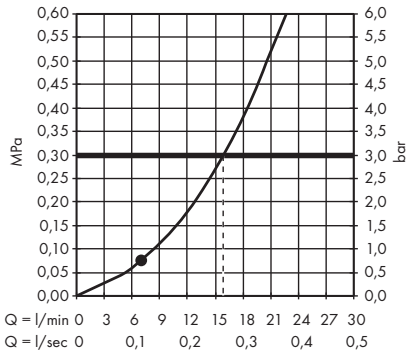

· Croma Select S Hand shower 1jet EcoSmart 9 l/ min
 # 26805400

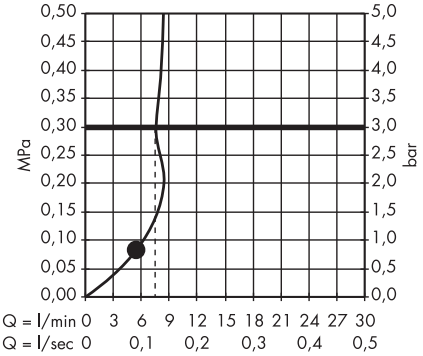

· Croma Select S Hand shower 1jet EcoSmart 7 l/ min
 # 26806400

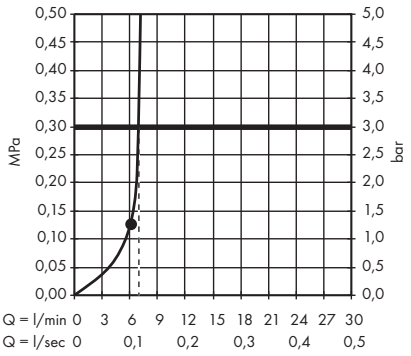

· PuraVida Hand shower 3jet
 # 28557000, 28557400

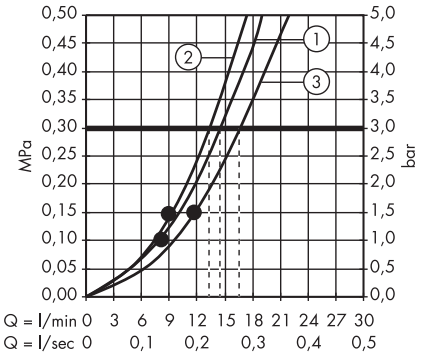

1. RainAir
2. CaresseAir
3. Mix

· PuraVida Hand shower 3jet EcoSmart 9 l/ min
 # 28567000, 28567400

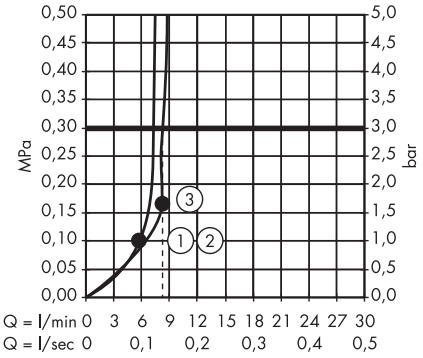

1. RainAir
2. CaresseAir
3. Mix

· PuraVida Baton hand shower 120 1jet
 # 28558000, 28558400

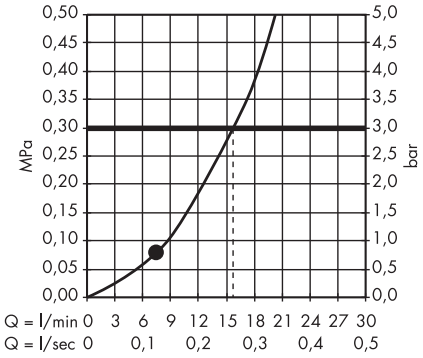

· PuraVida Baton hand shower 120 1jet EcoSmart 9 l/ min
 # 28568000, 28568400

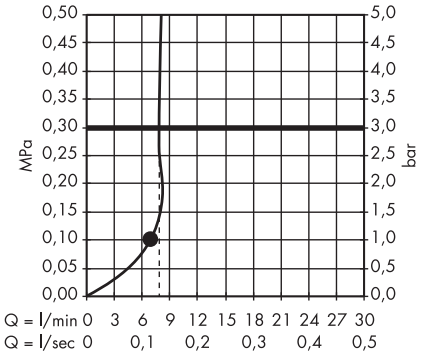

· Raindance Classic Hand shower 100 3jet
 # 28548000, 28548090

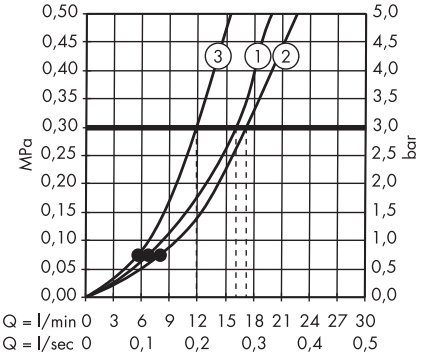

1. RainAir
2. WhirlAir
3. BalanceAir

· Croma 100 Hand shower Multi
 # 28536, -XXX

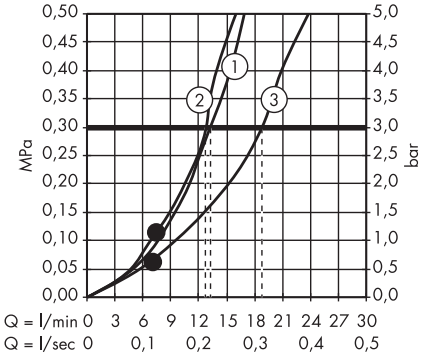

1. Mono
2. Massage
3. Rain

· Croma 100 Hand shower Multi EcoSmart 9 l/ min
 # 28538000

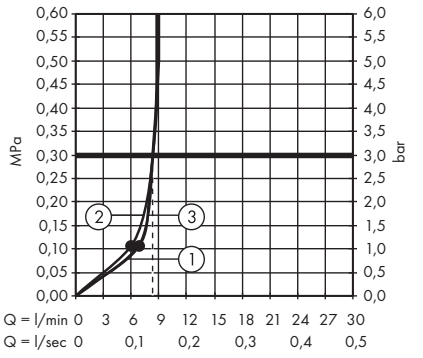

1. Massage
2. Mono
3. Rain

· Croma 100 Hand shower Vario
 # 28535000

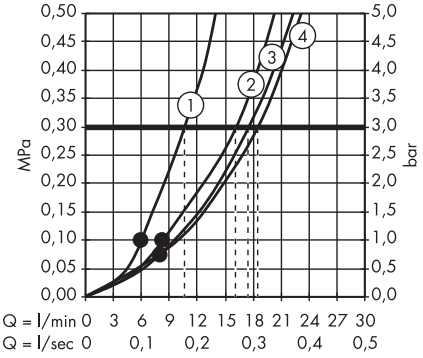

1. Massage
2. Shampoo
3. Regular
4. Rain

· Croma 100 Hand shower Vario EcoSmart 9 l/ min
 # 28537000

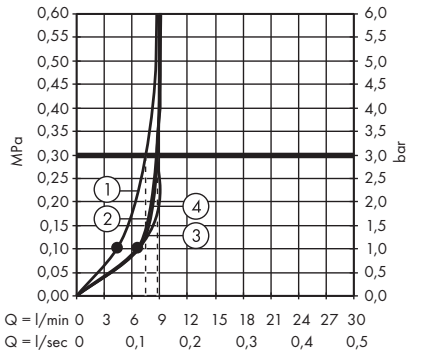

1. Massage
2. Shampoo
3. Regular
4. Rain

The consumption was measured in combination with the appropriate fittings (thermostat/mixer/in-wall valve) to reflect actual application in practice.

· Croma 100 Hand shower Mono
 # 28580000

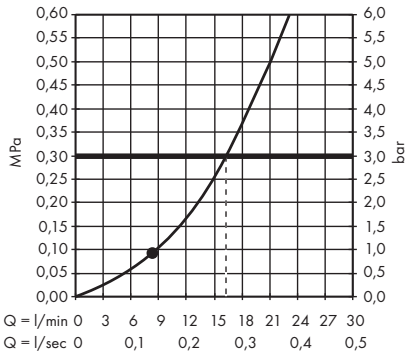

· Croma 100 Hand shower Mono EcoSmart 9 l/ min
 # 28583000

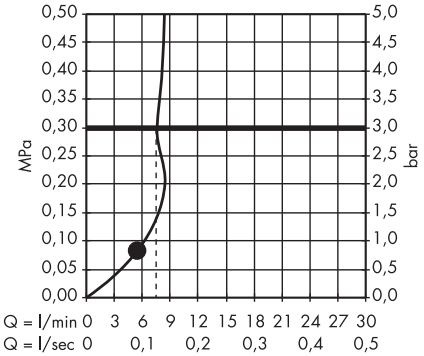

· Croma 100 Classic Hand shower Multi
 # 28539000

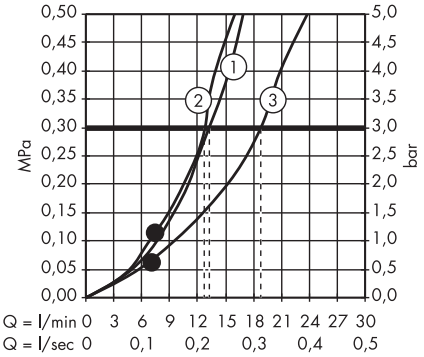

1. Mono
2. Massage
3. Rain

· Crometta 100 Hand shower Multi
 # 26823400

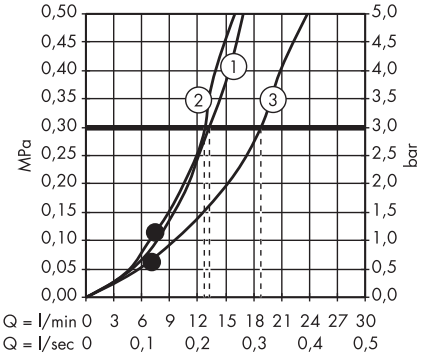

1. TurboRain
2. Massage
3. Rain

· Crometta 100 Hand shower Multi EcoSmart 9 l/ min
 # 26826400

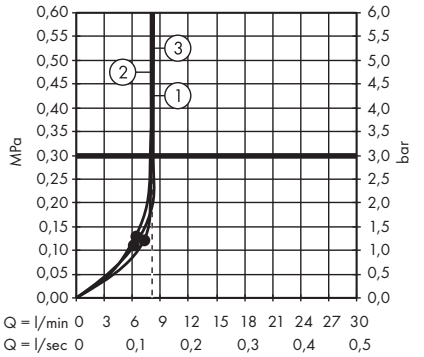

1. TurboRain
2. Massage
3. Rain

· Crometta 100 Hand shower Vario
 # 26824400

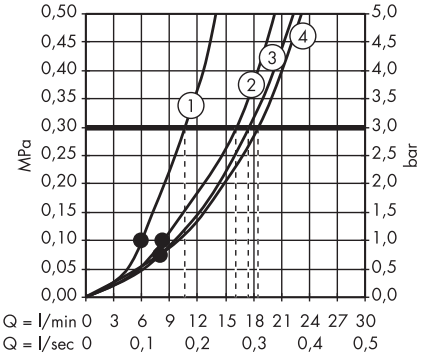

1. Massage
2. Shampoo
3. Regular
4. Rain

· Crometta 100 Hand shower Vario EcoSmart 9 l/ min
 # 26827400

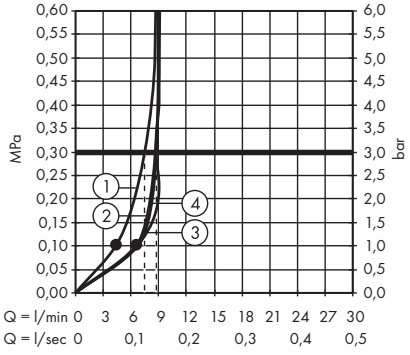

1. Massage
2. Shampoo
3. Regular
4. Rain

· Crometta 100 Hand shower Vario EcoSmart 6 l/ min
 # 26834400

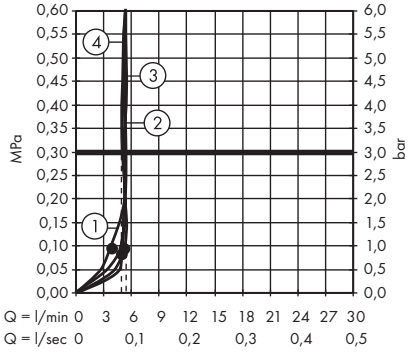

1. Massage spray
2. Shampoo spray
3. Normal spray
4. Rain

· Crometta 100 Hand shower 1jet
 # 26825400

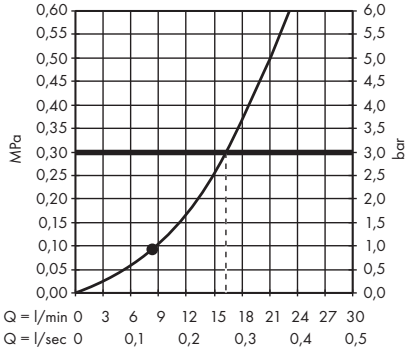

· Crometta 100 Hand shower 1jet EcoSmart 9 l/ min
 # 26828400

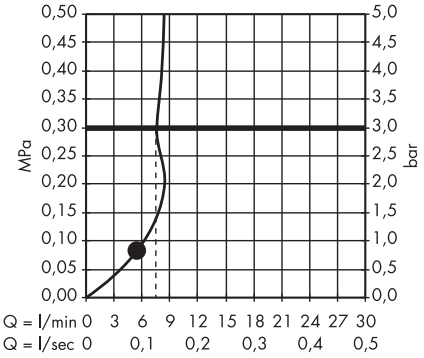

· Crometta 100 Hand shower 1jet EcoSmart 7 l/ min
 # 26829400

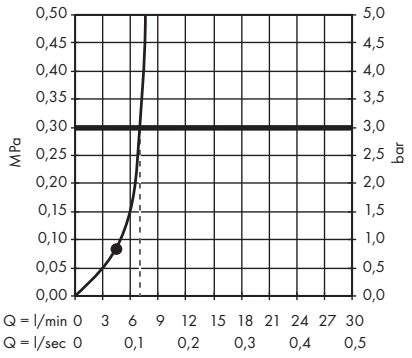

· Crometta Hand shower Vario
 # 26330400

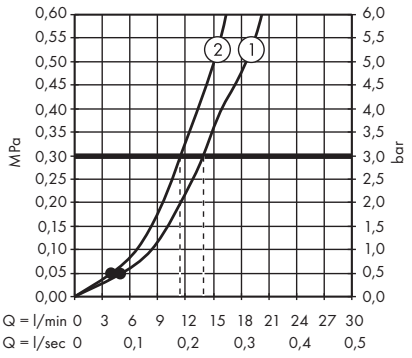

1. Rain
2. IntenseRain

· Crometta Hand shower Vario Green 6 l/ min
 # 26336400

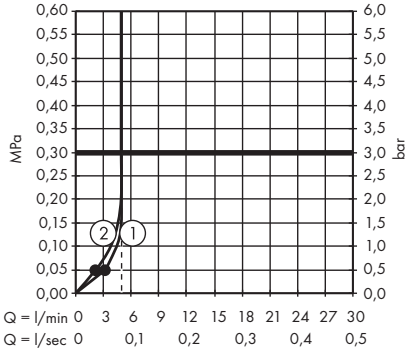

1. Rain
2. IntenseRain

· Crometta Hand shower Vario EcoSmart 9 l/ min
 # 26332400

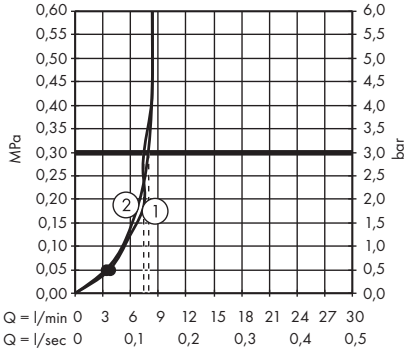

1. Rain
2. IntenseRain

· Crometta Hand shower 1jet
 # 26331400

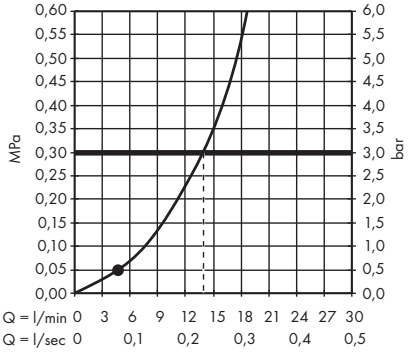

· Crometta Hand shower 1jet Green 6 l/ min
 # 26334400

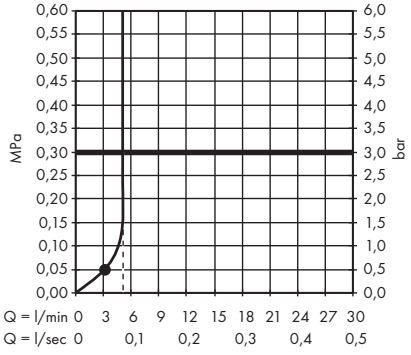

· Crometta Hand shower 1jet EcoSmart 9 l/ min
 # 26333400

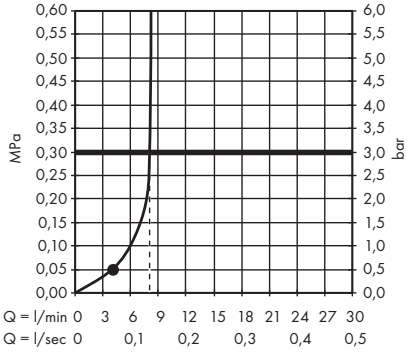

· Crometta 85 Hand shower Multi
 # 28563000

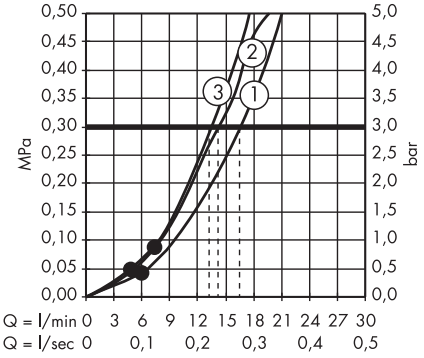

1. Regular
2. Massage
3. Mono

The consumption was measured in combination with the appropriate fittings (thermostat/mixer/in-wall valve) to reflect actual application in practice.

· Crometta 85 Hand shower Vario
 # 28562000

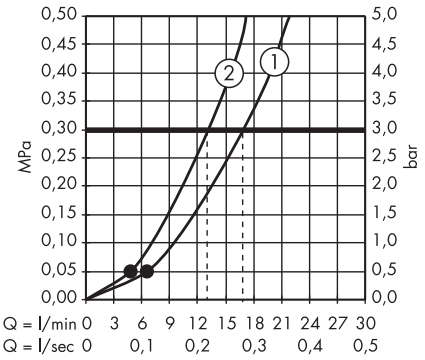

1. Regular
2. Vario

· Crometta 85 Hand shower Mono
 # 28585000

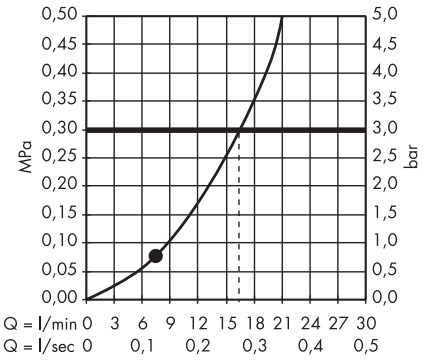

· Crometta 85 Hand shower Mono Green 6 l/ min
 # 28561000

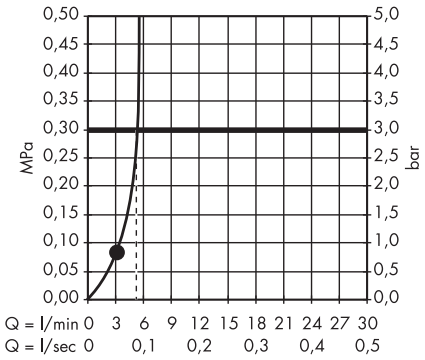

· Bidette hand shower 1jet with shower holder and pressure shower hose 125 cm
 # 32129000

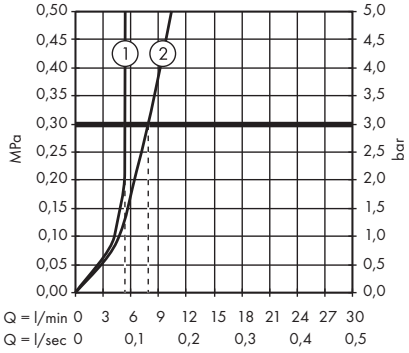

1. With flow limiter
2. Without flow limiter

· Bidette hand shower 1jet with shower holder and pressure shower hose 160 cm
 # 32128000

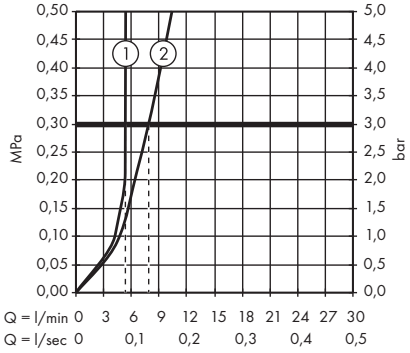

1. With flow limiter
2. Without flow limiter

· Bidette hand shower 1jet with shower holder and pressure resistant shower hose 125 cm
 # 32127000

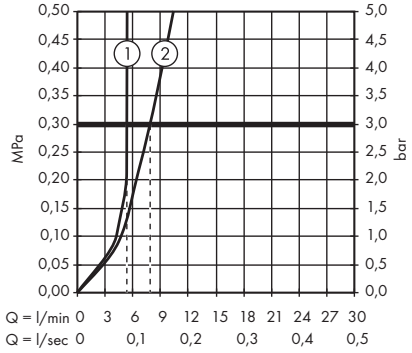

1. With flow limiter
2. Without flow limiter

Overhead showers

· Rainfinity Overhead shower 250 1jet with wall connector
 # 26226000, 26226700

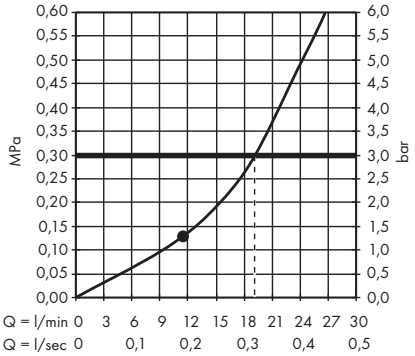

· Rainfinity Overhead shower 250 1jet EcoSmart with wall connector
 # 26227000, 26227700

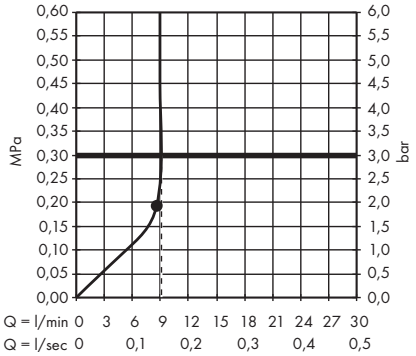

· Rainfinity Overhead shower 250 1jet
 # 26228000, 26228140, 26228340, 26228670, 26228700, 26228990

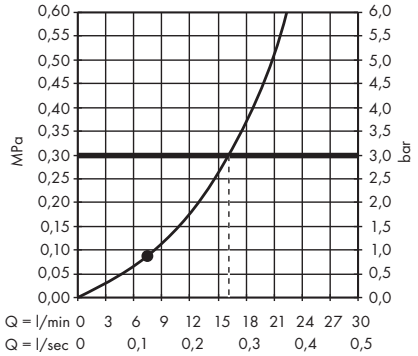

· Rainfinity Overhead shower 250 1jet EcoSmart
 # 26229000, 26229140, 26229340, 26229670, 26229700, 26229990

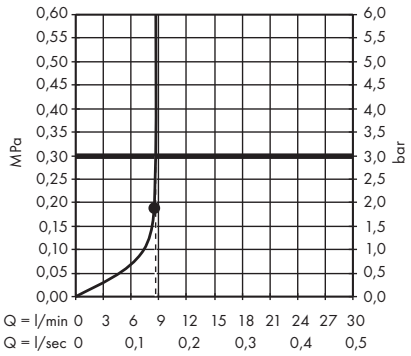

· Rainfinity Overhead shower 360 1jet with wall connector
 # 26230000, 26230140, 26230340, 26230670, 26230700, 26230990

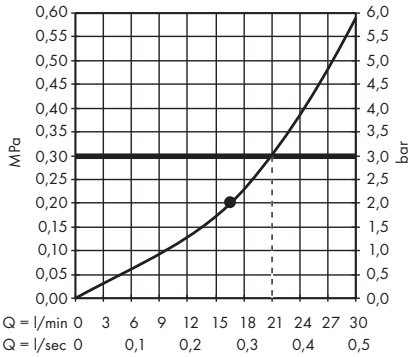

· Rainfinity Overhead shower 360 1jet
 # 26231000, 26231140, 26231340, 26231670, 26231700, 26231990

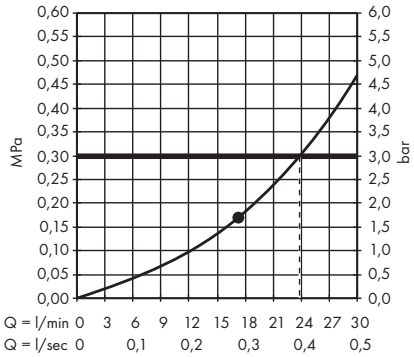

· Rainfinity Overhead shower 250 3jet with wall connector
 # 26232000, 26232700

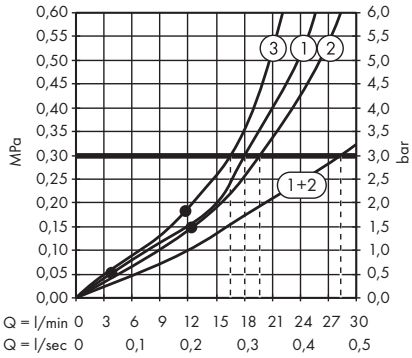

1. Intense PowderRain
2. PowderRain
3. RainStream

· Rainfinity Overhead shower 250 3jet EcoSmart with wall connector
 # 26233000, 26233700

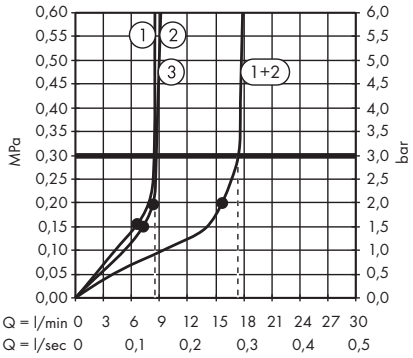

1. RainStream
2. PowderRain
3. Intense PowderRain

· Rainfinity Overhead shower 360 3jet with wall connector
 # 26234000, 26234140, 26234340, 26234670, 26234700, 26234990

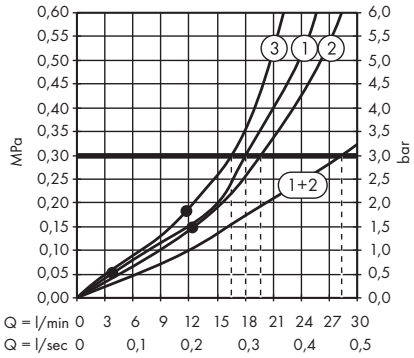

1. Intense PowderRain
2. PowderRain
3. RainStream

· Rainmaker Select Overhead shower 580 3jet
 # 24001400, 24001600

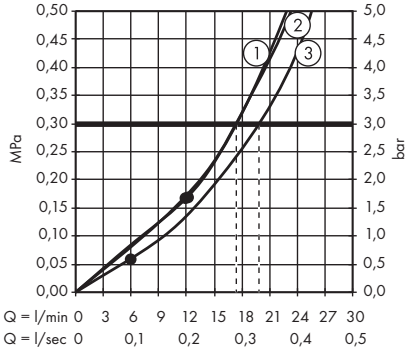

1. Rain
2. Rainflow
3. Mono

· Rainmaker Select Overhead shower 580 3jet EcoSmart 9 l/ min
 # 24011400

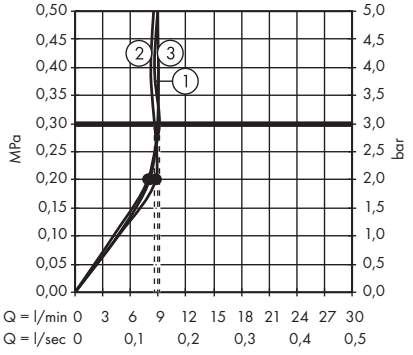

1. Rain
2. Rainflow
3. Mono

· Rainmaker Select Overhead shower 460 3jet with shower arm
 # 24007400, 24007600

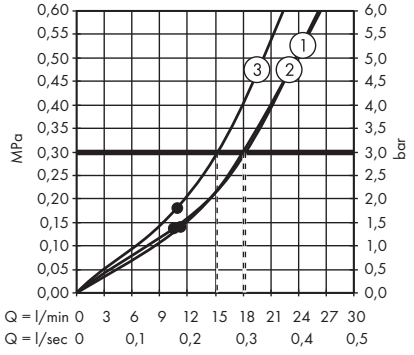

1. Mono
2. Rain
3. RainStream

The consumption was measured in combination with the appropriate fittings (thermostat/mixer/in-wall valve) to reflect actual application in practice.

· Rainmaker Select Overhead shower 460 3jet EcoSmart 9 l/ min with shower arm
 # 24017400

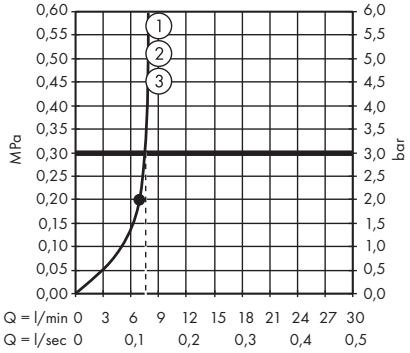

· Rainmaker Select Overhead shower 460 3jet with ceiling connector
 # 24006400, 24006600

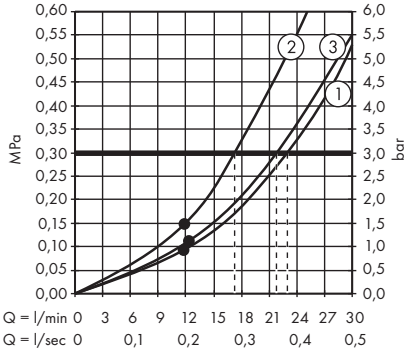

1. Mono
2. Rain
3. RainStream

· Rainmaker Select Overhead shower 460 3jet EcoSmart 9 l/ min with ceiling connector
 # 24016400

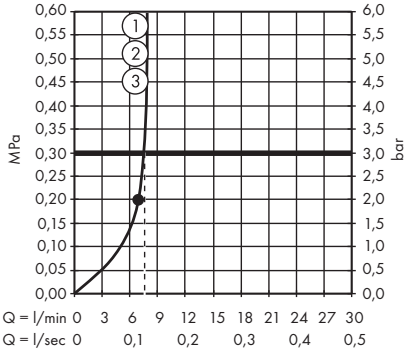

1. Rain
2. RainStream
3. Mono

· Rainmaker Select Overhead shower 460 2jet with shower arm
 # 24005400, 24005600

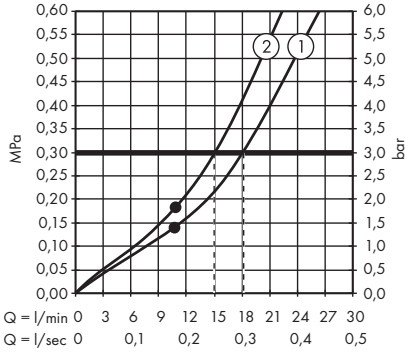

1. Rain
2. RainStream

· Rainmaker Select Overhead shower 460 2jet EcoSmart 9 l/ min with shower arm
 # 24015400

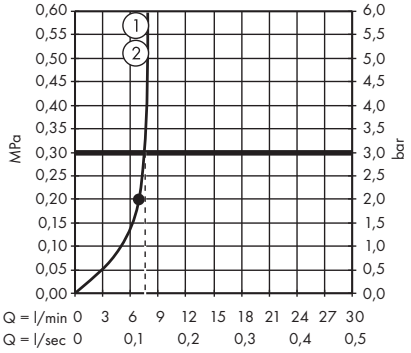

1. Rain
2. RainStream

· Rainmaker Select Overhead shower 460 2jet with ceiling connector
 # 24004400, 24004600

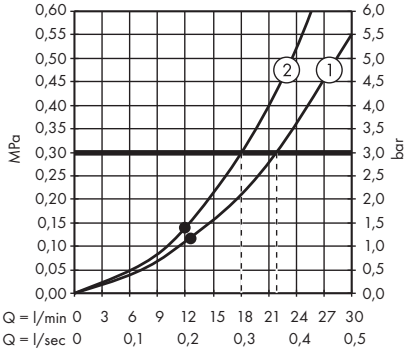

1. Rain
2. RainStream

· Rainmaker Select Overhead shower 460 2jet EcoSmart 9 l/ min with ceiling connector
 # 24014400

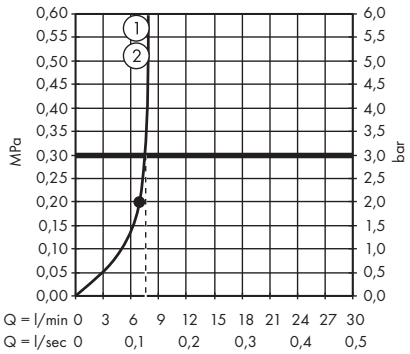

1. Rain
2. RainStream

· Rainmaker Select Overhead shower 460 1jet with shower arm
 # 24003400, 24003600

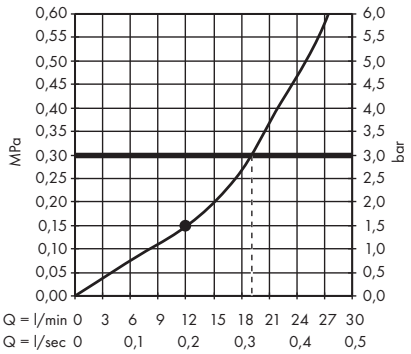

· Rainmaker Select Overhead shower 460 1jet EcoSmart 9 l/ min with shower arm
 # 24013400

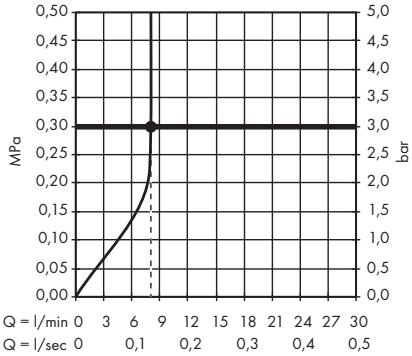

· Rainmaker Select Overhead shower 460 1jet with ceiling connector
 # 24002400, 24002600

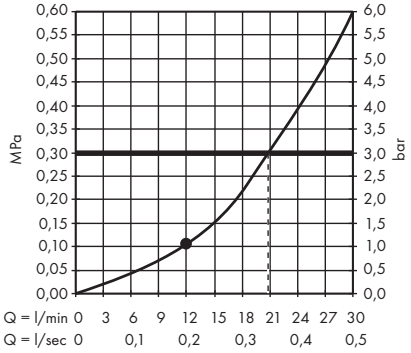

· Rainmaker Select Overhead shower 460 1jet EcoSmart 9 l/ min with ceiling connector
 # 24012400

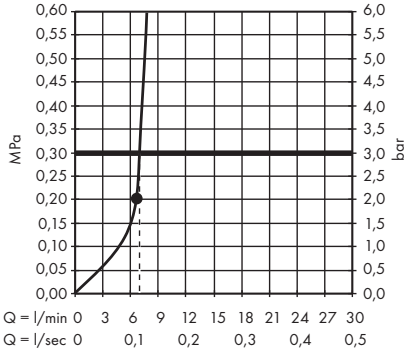

· Raindance Select E Overhead shower 300 3jet with shower arm
 # 26468000, 26468400

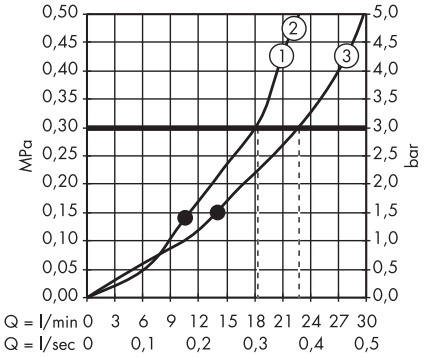

1. Rain
2. RainAir
3. RainStream

· Raindance Select E Overhead shower 300 2jet with ceiling connector
 # 27384000, 27384400

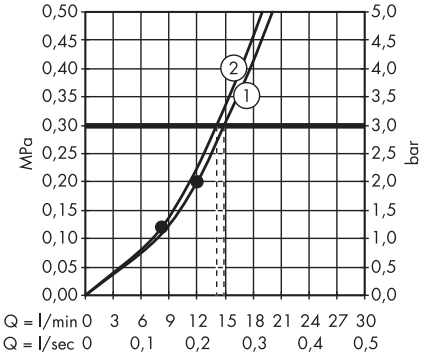

1. Rain
2. RainAir

· Raindance Select E Overhead shower 300 2jet EcoSmart 9 l/ min with ceiling connector
 # 26608000, 26608400

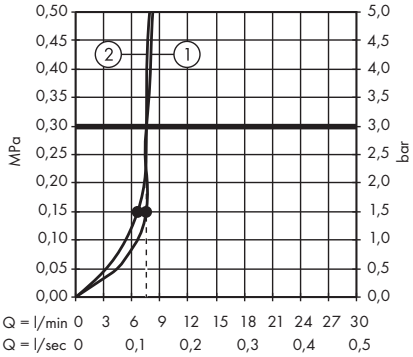

1. Rain
2. RainAir

· Raindance Select E Overhead shower 300 2jet with shower arm
 # 27385000, 27385400

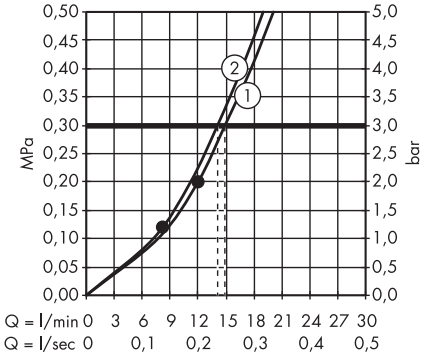

1. Rain
2. RainAir

· Raindance Select E Overhead shower 300 2jet EcoSmart 9 l/ min with shower arm
 # 26609000, 26609400

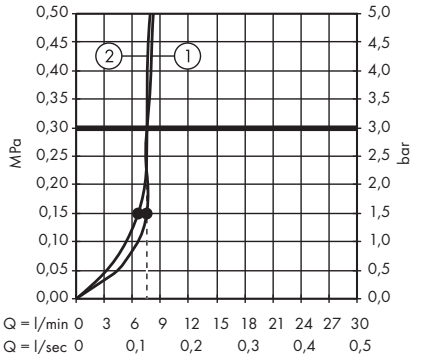

1. Rain
2. RainAir

· Raindance Select S Overhead shower 300 2jet with ceiling connector
 # 27337000, 27337400

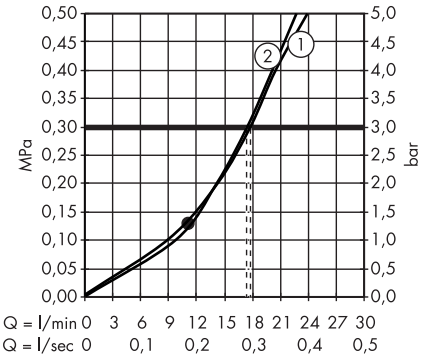

1. Rain
2. RainAir

· Raindance Select S Overhead shower 300 2jet with shower arm
 # 27378000, 27378400

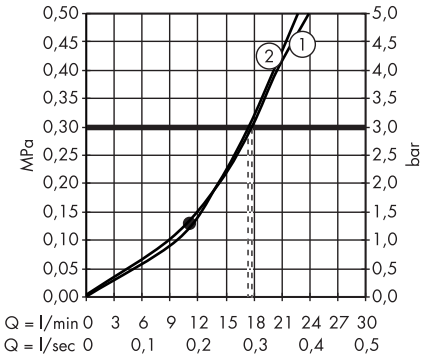

1. Rain
2. RainAir

The consumption was measured in combination with the appropriate fittings (thermostat/mixer/in-wall valve) to reflect actual application in practice.

· Raindance Select S Overhead shower 240 2jet with ceiling connector
 # 26467000, 26467400

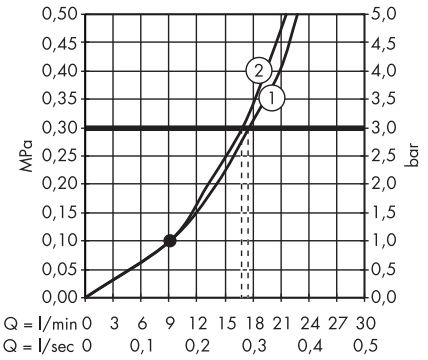

1. Rain
2. RainAir

· Raindance Select S Overhead shower 240 2jet EcoSmart 9 l/ min with ceiling connector
 # 26469000

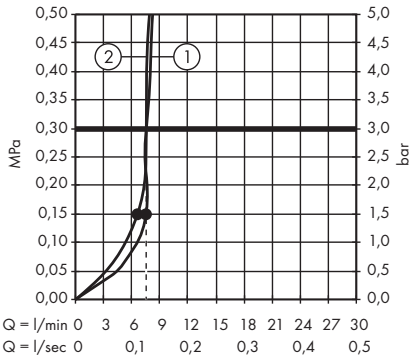

1. Rain
2. RainAir

· Raindance Select S Overhead shower 240 2jet with shower arm
 # 26466000, 26466400

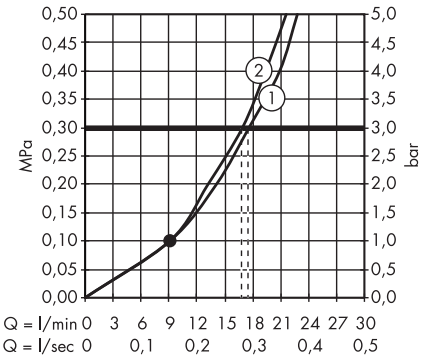

1. Rain
2. RainAir

· Raindance Select S Overhead shower 240 2jet EcoSmart 9 l/ min with shower arm
 # 26470000, 26470400

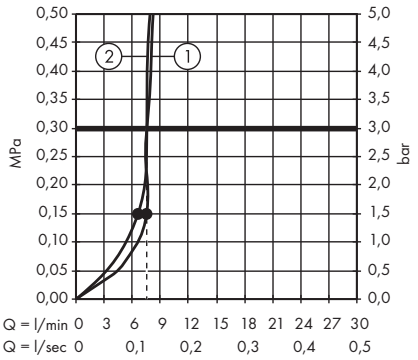

1. Rain
2. RainAir

· Croma Select E Overhead shower 180 2jet
 # 26524000, 26524400

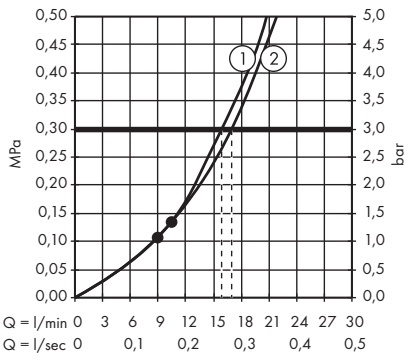

1. IntenseRain
2. Rain

· Croma Select E Overhead shower 180 2jet EcoSmart 9 l/ min
 # 26528000, 26528400

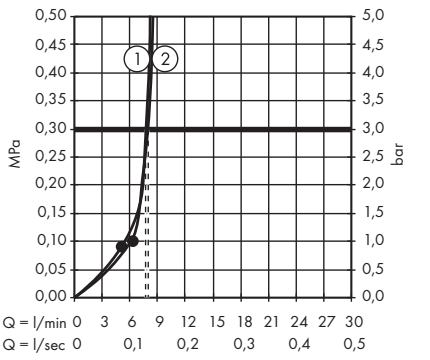

1. IntenseRain
2. Rain

· Croma Select S Overhead shower 180 2jet
 # 26522000, 26522400

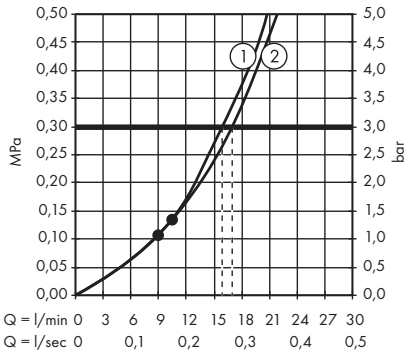

1. IntenseRain
2. Rain

· Croma Select S Overhead shower 180 2jet EcoSmart 9 l/ min
 # 26523000, 26523400

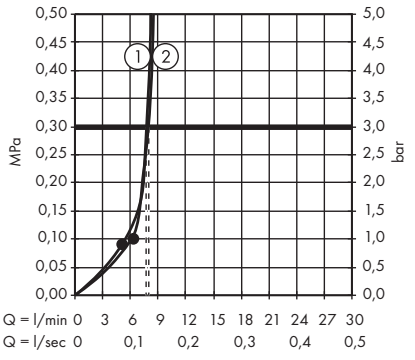

1. IntenseRain
2. Rain

· PuraVida Overhead shower 400 1jet with ceiling connector
 # 27390000, 27390400

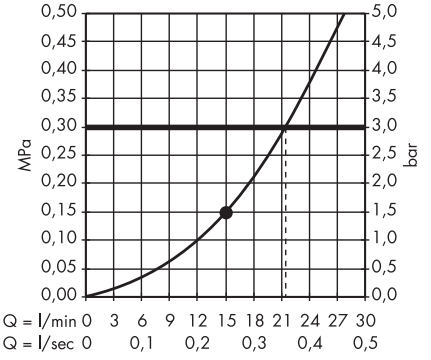

· PuraVida Overhead shower 400 1jet with shower arm
 # 27437000, 27437400

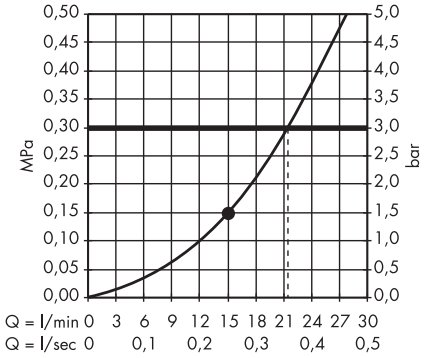

· Raindance Rainmaker Overhead shower 680/460 3jet with lighting
 # 28418000

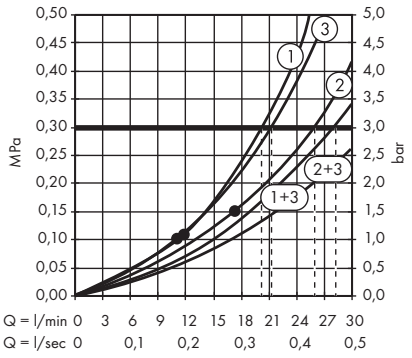

1. RainAir
2. RainAir XXL
3. WhirlAir

· Raindance Rainmaker Overhead shower 600 3jet with lighting
 # 26117000

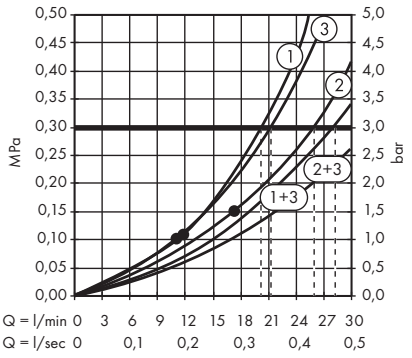

1. RainAir
2. RainAir XXL
3. WhirlAir

· Raindance Overhead shower 260/260 1jet
 # 26472000

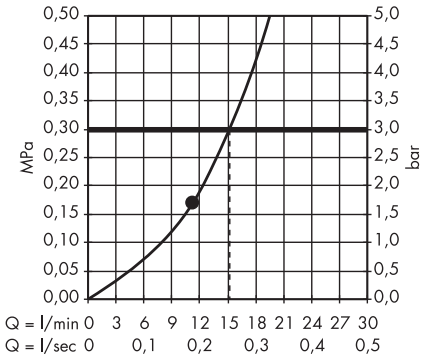

· Raindance Overhead shower 260/260 1jet EcoSmart 9 l/ min
 # 26481000

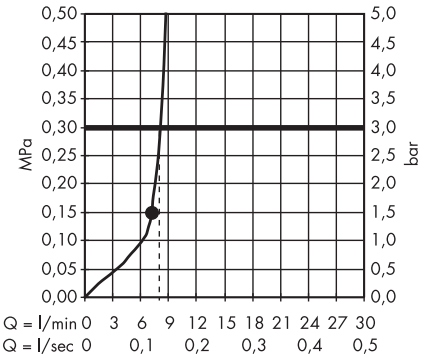

· Raindance Rainfall Overhead shower 180 2jet
 # 28433000, 28433400

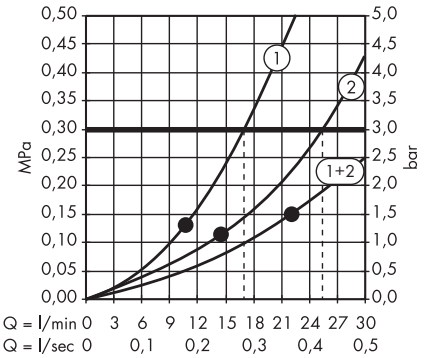

1. RainAir
2. Rainflow

· Raindance Rainfall Overhead shower 150 1jet stream
 # 26443000

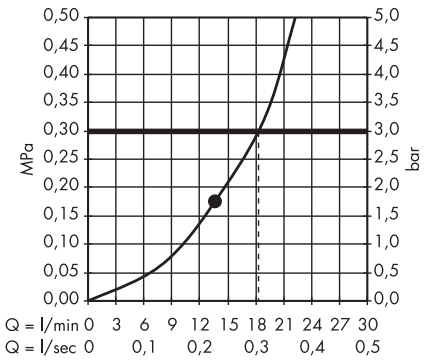

· Raindance Rainfall Overhead shower 150 1jet
 # 26442000

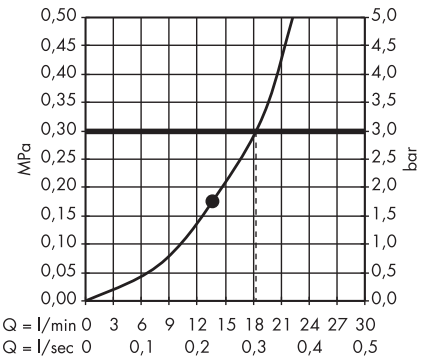

· Raindance E Overhead shower 300 1jet with shower arm
 # 26238000, 26238140, 26238340, 26238670, 26238700, 26238990

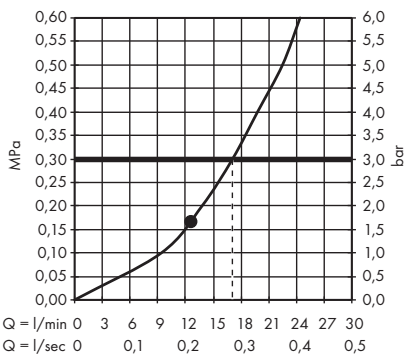

The consumption was measured in combination with the appropriate fittings (thermostat/mixer/in-wall valve) to reflect actual application in practice.

· Raindance E Overhead shower 300 1jet EcoSmart 9 l/ min with shower arm
 # 26239000

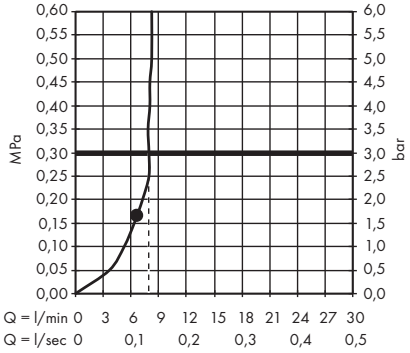

· Raindance E Overhead shower 300 1jet with ceiling connector
 # 26250000, 26250140, 26250340, 26250670, 26250700, 26250990

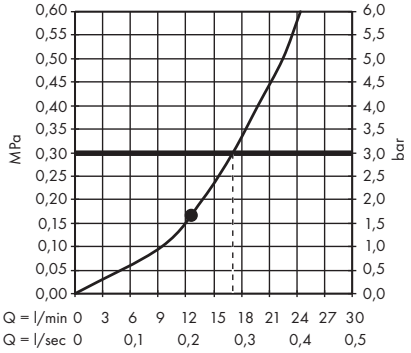

· Raindance E Overhead shower 300 1jet EcoSmart 9 l/ min with ceiling connector
 # 26251000

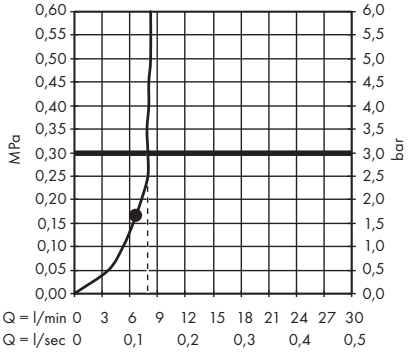

· Raindance E Overhead shower 400/400 1jet
 # 26252000

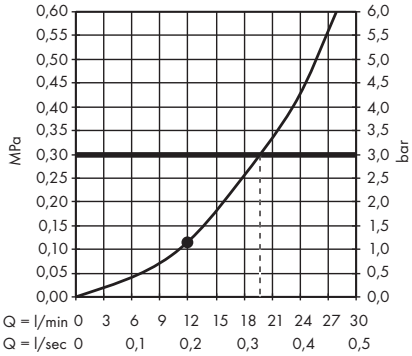

· Raindance E Overhead shower 400/400 1jet EcoSmart 9 l/ min
 # 26253000

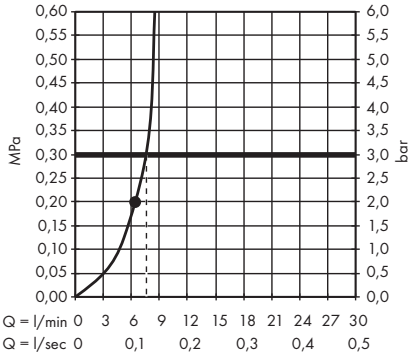

· Raindance E Overhead shower 360 1jet with ceiling connector
 # 27381000

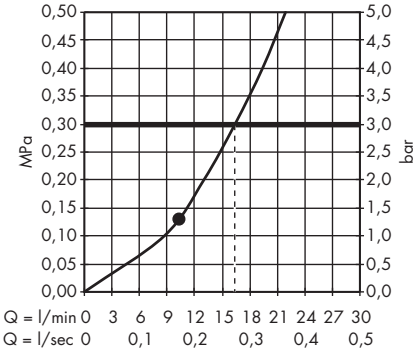

· Raindance E Overhead shower 360 1jet EcoSmart 9 l/ min with ceiling connector
 # 26604000

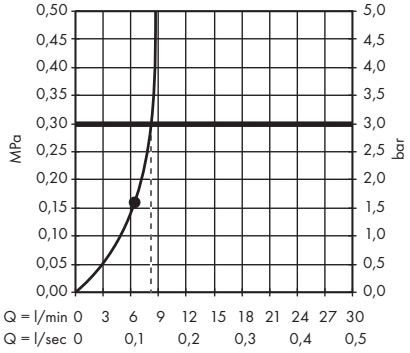

· Raindance E Overhead shower 360 1jet with shower arm 24 cm
 # 27371000

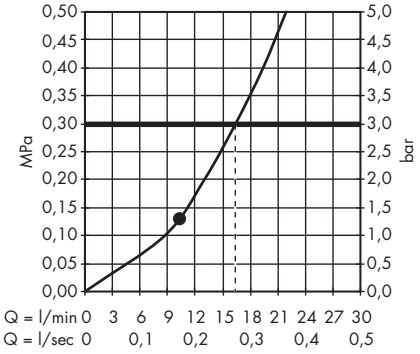

· Raindance E Overhead shower 360 1jet with shower arm 39 cm
 # 27376000

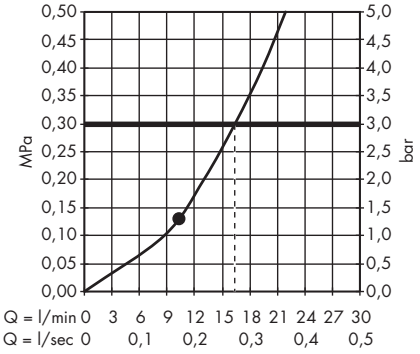

· Raindance E Overhead shower 360 1jet EcoSmart 9 l/ min with shower arm
 # 26605000

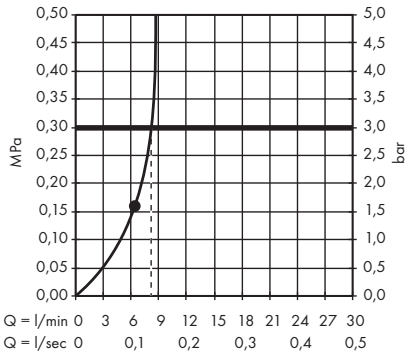

· Raindance E Overhead shower 240 1jet with ceiling connector
 # 27380000

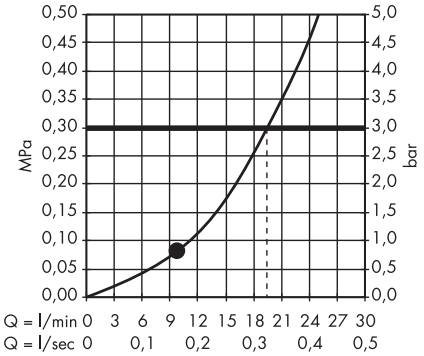

· Raindance E Overhead shower 240 1jet EcoSmart 9 l/ min with ceiling connector
 # 27383000

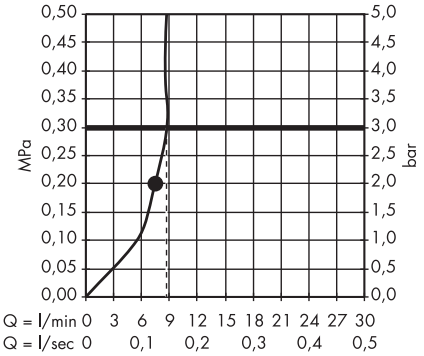

· Raindance E Overhead shower 240 1jet with shower arm
 # 27370000

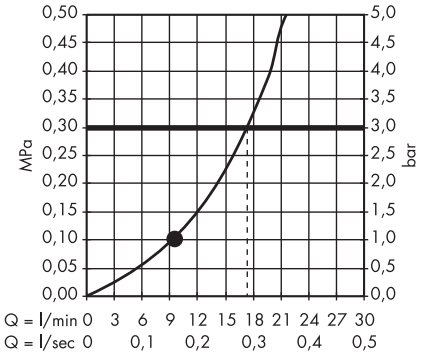

· Raindance E Overhead shower 240 1jet EcoSmart 9 l/ min with shower arm
 # 27375000

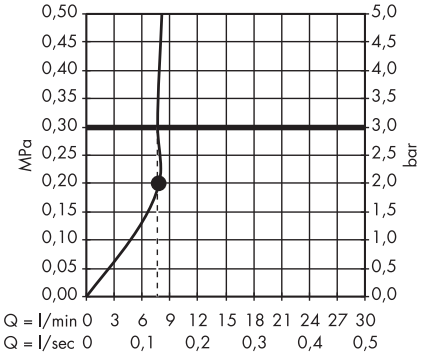

· Raindance S Overhead shower 300 1jet with shower arm 46 cm
 # 27492000

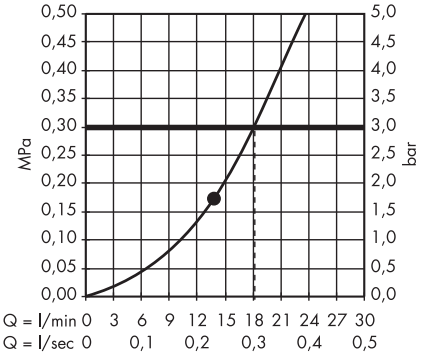

· Raindance S Overhead shower 300 1jet with shower arm 39 cm
 # 27493000

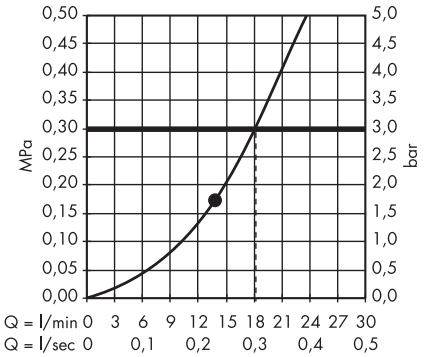

· Raindance S Overhead shower 300 1jet EcoSmart 9 l/ min with shower arm
 # 26601000

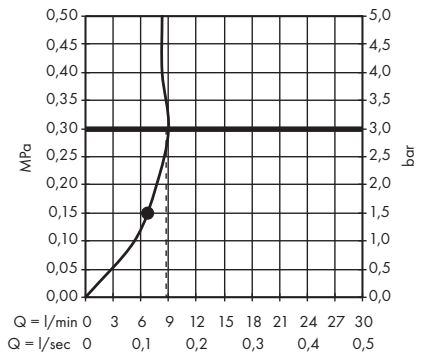

· Raindance S Overhead shower 300 1jet with ceiling connector
 # 27494000

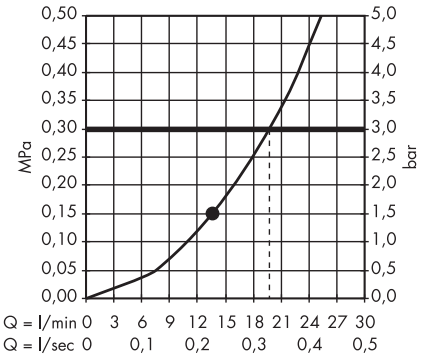

The consumption was measured in combination with the appropriate fittings (thermostat/mixer/in-wall valve) to reflect actual application in practice.

· Raindance S Overhead shower 300 1jet EcoSmart 9 l/ min with ceiling connector
 # 26600000

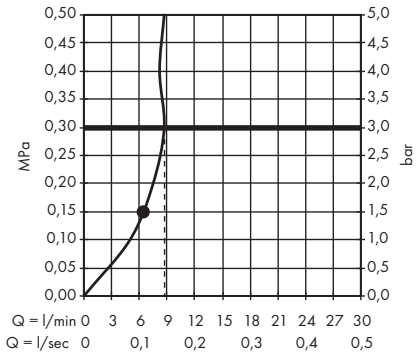

· Raindance S Overhead shower 240 1jet PowderRain with ceiling connector
 # 27620000

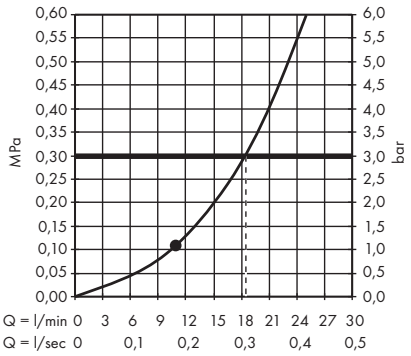

· Raindance S Overhead shower 240 1jet PowderRain with shower arm
 # 27607000

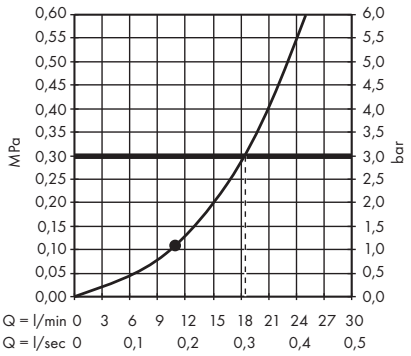

· Raindance S Overhead shower 240 1jet PowderRain
 # 27623000

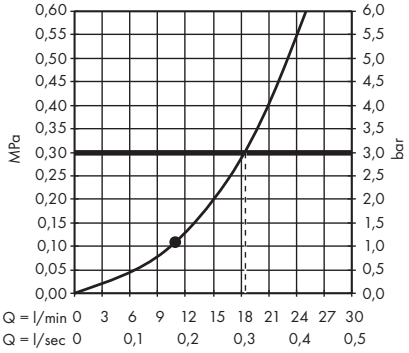

· Raindance S Overhead shower 240 1jet with shower arm
 # 27474000

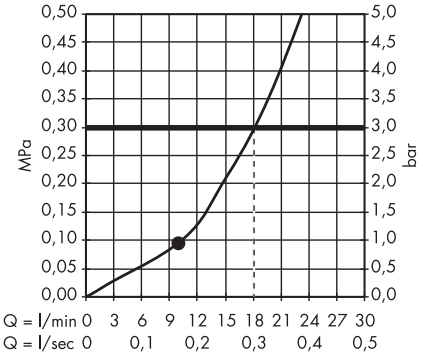

· Raindance S Overhead shower 240 1jet EcoSmart 9 l/ min with shower arm
 # 27461000

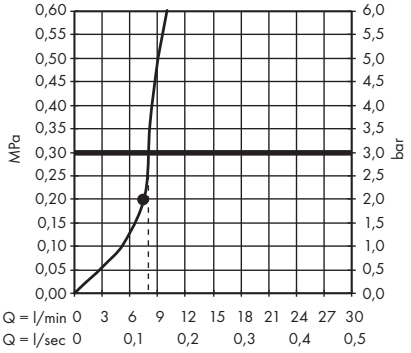

· Raindance S Overhead shower 240 1jet with ceiling connector
 # 27477000

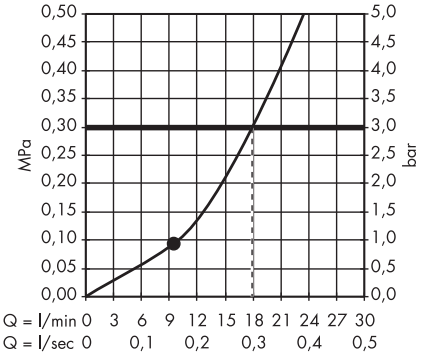

· Raindance S Overhead shower 240 1jet EcoSmart 9 l/ min with ceiling connector
 # 27463000

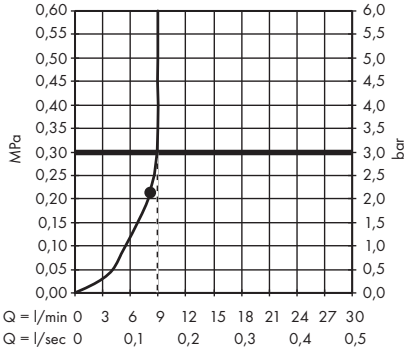

· Raindance S Overhead shower 180 1jet with shower arm 24 cm
 # 27476000

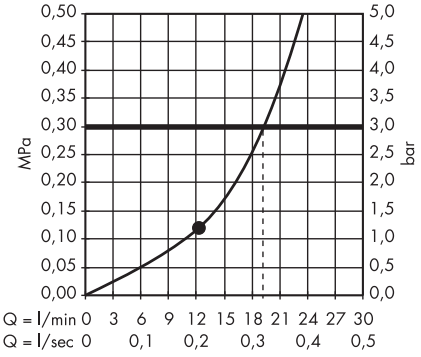

· Raindance S Overhead shower 180 1jet EcoSmart 9 l/ min with shower arm
 # 27462000

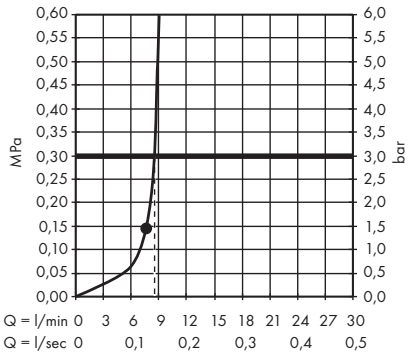

· Raindance S Overhead shower 180 1jet with shower arm 39 cm
 # 27468000

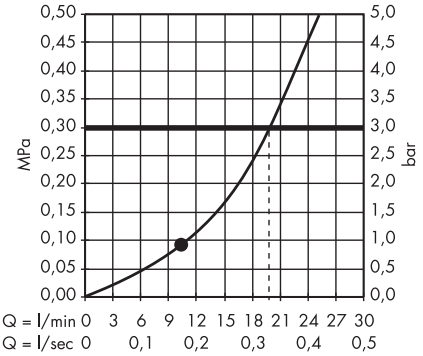

· Raindance S Overhead shower 180 1jet with ceiling connector
 # 27478000

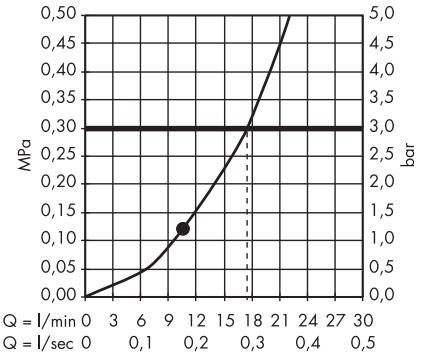

· Raindance S Overhead shower 180 1jet EcoSmart 9 l/ min with ceiling connector
 # 27464000

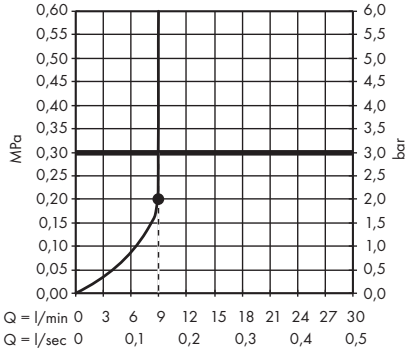

· Raindance Classic Overhead shower 240 1jet with shower arm
 # 27424000, 27424090

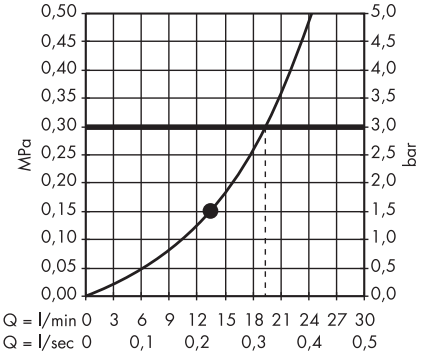

· Raindance Classic Overhead shower 240 1jet with ceiling connector
 # 27405000, 27405090

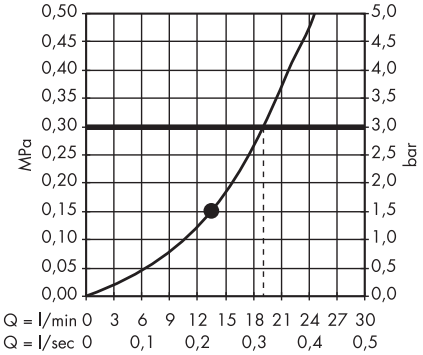

· Croma E Overhead shower 280 1jet
 # 26257000

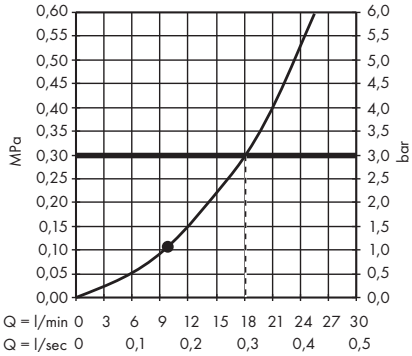

· Croma E Overhead shower 280 1jet EcoSmart
 # 26258000

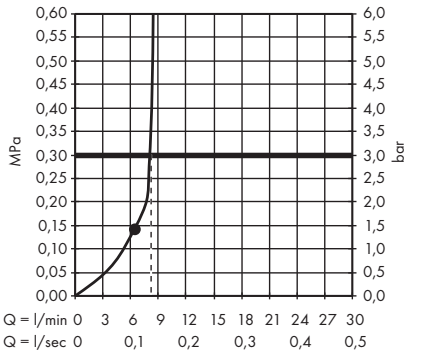

· Croma Overhead shower 280 1jet
 # 26220000, 26220140, 26220340, 26220670, 26220700, 26220990

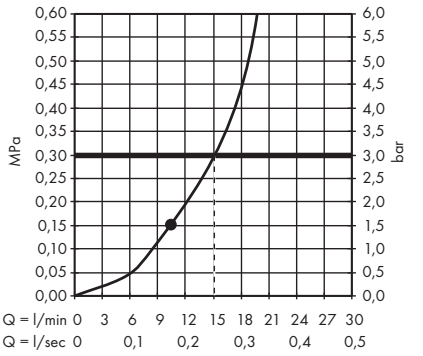

The consumption was measured in combination with the appropriate fittings (thermostat/mixer/in-wall valve) to reflect actual application in practice.

· Croma Overhead shower 280 1jet EcoSmart 9 l/ min
 # 26221000, 26221140, 26221340, 26221670, 26221700, 26221990

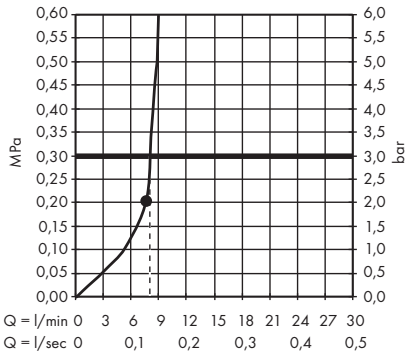

· Croma Overhead shower 220 1jet
 # 26464000

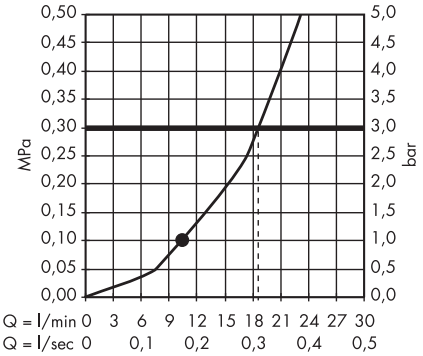

· Croma Overhead shower 220 1jet EcoSmart 9 l/ min
 # 26465000

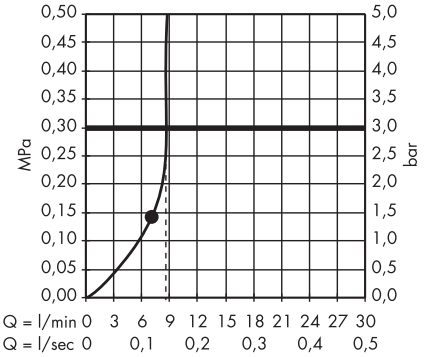

· Croma Overhead shower 220 1jet LowPressure
 # 26734000

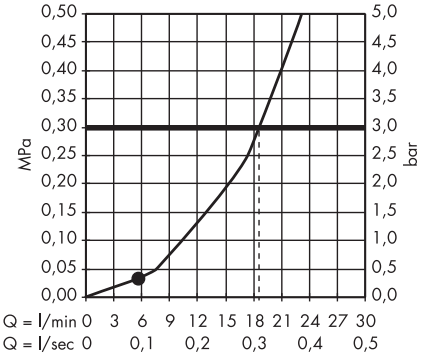

· Croma Overhead shower 160 1jet
 # 27450000

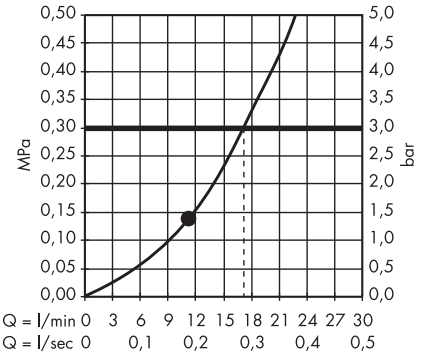

· Croma 100 Overhead shower Multi
 # 27443000

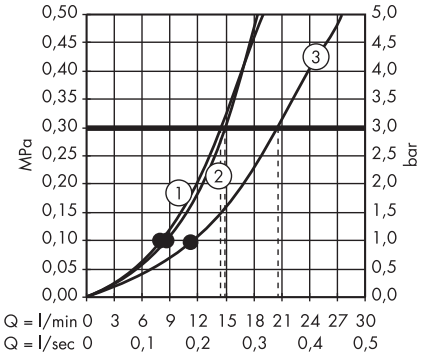

1. Massage
2. Mono
3. Rain

· Croma 100 Overhead shower Vario
 # 27441000

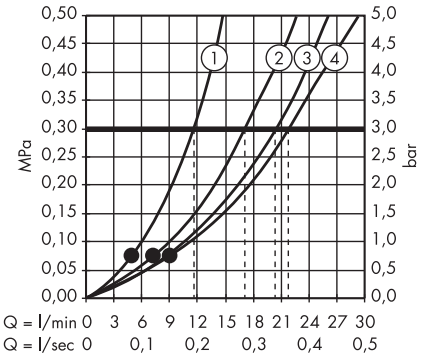

1. Massage
2. Shampoo
3. Regular
4. Rain

· Croma 100 Overhead shower Vario EcoSmart 9 l/ min
 # 28462000

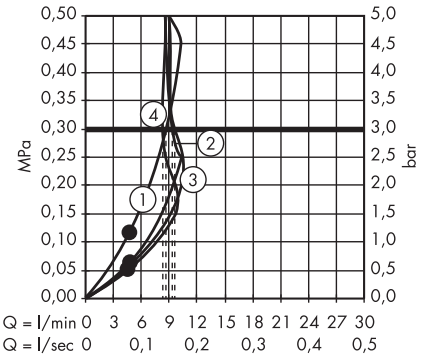

1. Massage
2. Shampoo
3. Regular
4. Rain

· Crometta E Overhead shower 240 1jet
 # 26726000

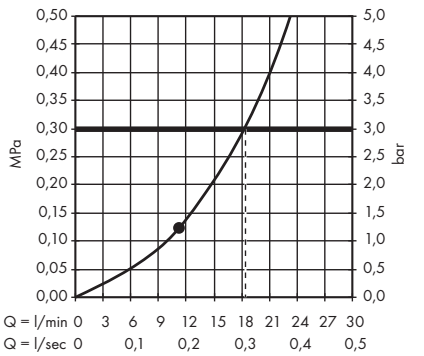

· Crometta E Overhead shower 240 1jet EcoSmart 9 l/ min
 # 26727000

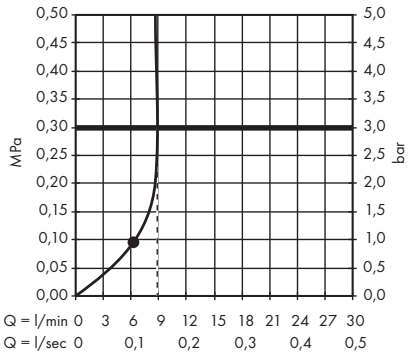

· Crometta E Overhead shower 240 1jet LowPressure
 # 26722000

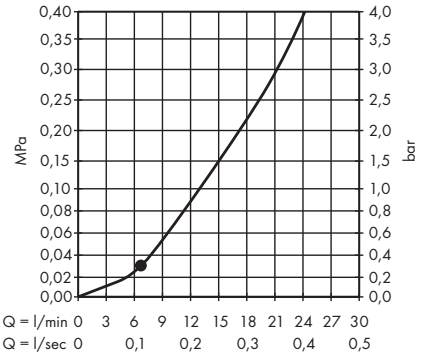

· Crometta S Overhead shower 240 1jet
 # 26723000, 26723340

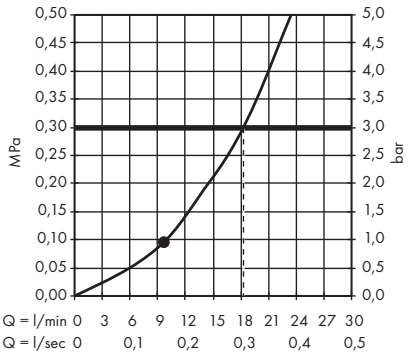

· Crometta S Overhead shower 240 1jet EcoSmart 9 l/ min
 # 26724000

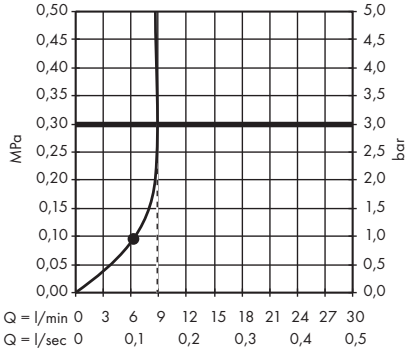

· Crometta S Overhead shower 240 1jet LowPressure
 # 26725000

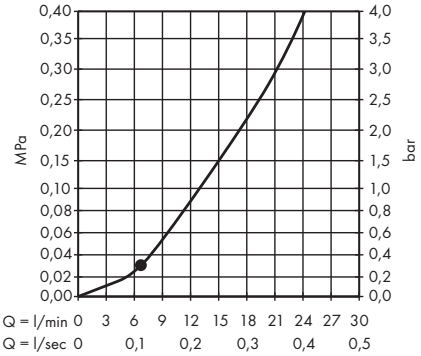

· Crometta Overhead shower 160 1jet
 # 26577000, 26577400

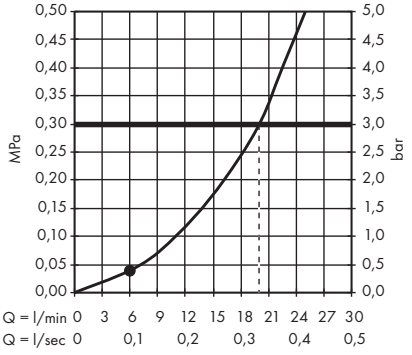

· Crometta Overhead shower 160 1jet EcoSmart 9 l/ min
 # 26578000, 26578400

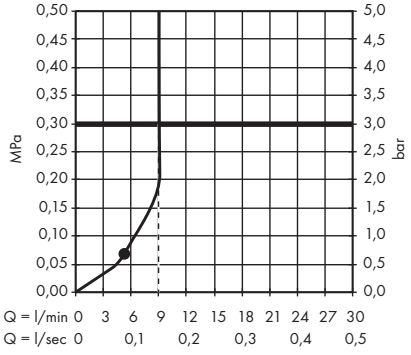

· Crometta Overhead shower 160 1jet LowPressure
 # 26576400

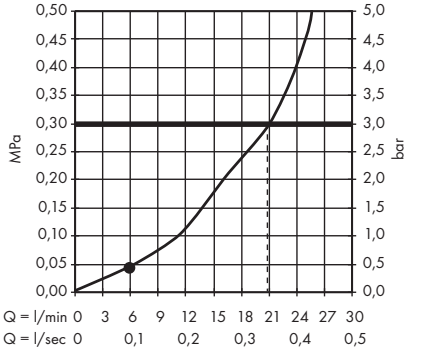

· Crometta 85 Overhead shower Multi
 # 28425000

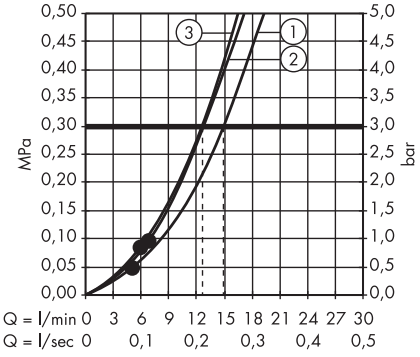

1. Regular
2. Massage
3. Mono

The consumption was measured in combination with the appropriate fittings (thermostat/mixer/in-wall valve) to reflect actual application in practice.

· Crometta 85 Overhead shower Vario
 # 28424000

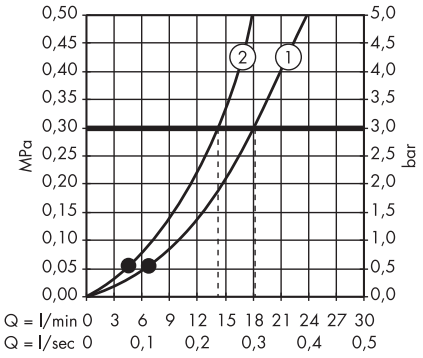

1. Regular
2. Vario

· Crometta 85 Overhead shower 1jet Green 6 l/ min
 # 28423000

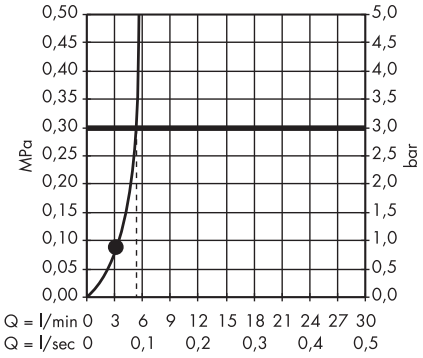

· Clubmaster Overhead shower 3jet with shower arm
 # 27475000

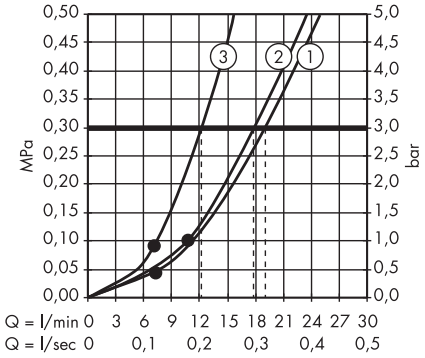

1. Regular
2. Soft
3. Massage

· Clubmaster Overhead shower 3jet EcoSmart 9 l/ min with shower arm
 # 26606000

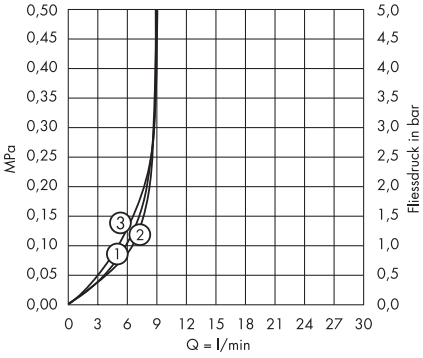

1. Regular
2. Soft
3. Massage

· Clubmaster Overhead shower 3jet
 # 28496000

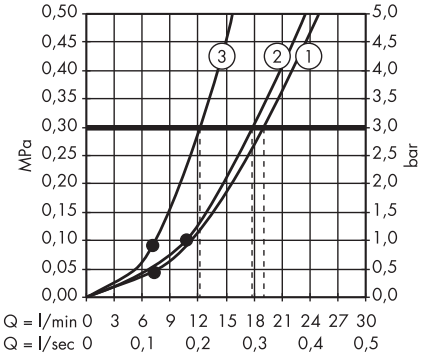

1. Regular
2. Soft
3. Massage

Body showers

· Rainfinity Shoulder shower 500 1jet with shower shelf
 # 26243000, 26243700

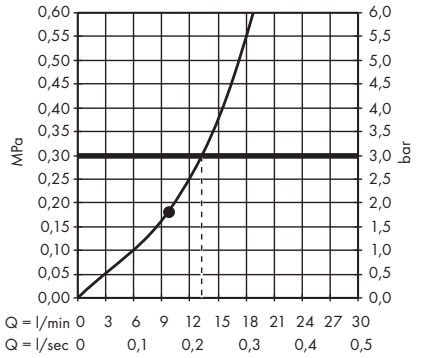

· PuraVida Body shower 100 1jet
 # 28430000, 28430400

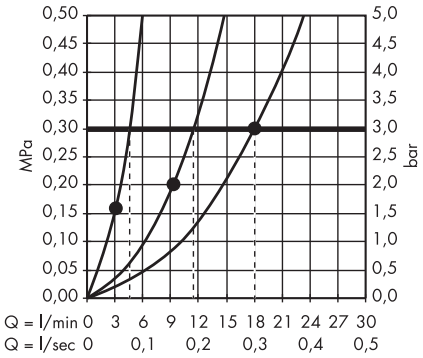

1. 1 x Body shower
2. 3 x Body shower
3. 6 x Body shower

· Bodyvette Body shower 1jet
 # 28466000

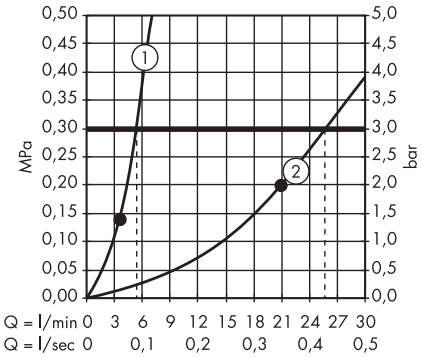

1. 1 x Body shower
2. 6 x Body shower

Showerpipes and shower panels

· Rainfinity Showerpipe 360 1jet for concealed installation
 # 26842000, 26842700

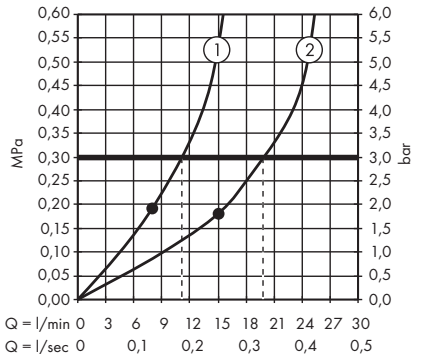

1. Hand shower
2. Overhead shower

· Rainmaker Select Showerpipe 460 3jet with thermostat
 # 27106400

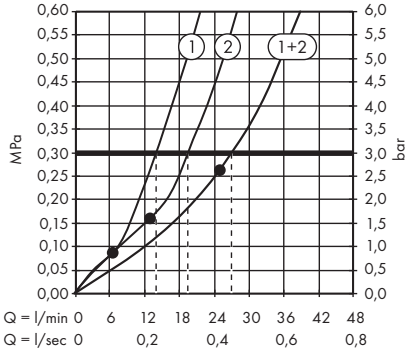

1. Hand shower
2. Overhead shower

· Rainmaker Select Showerpipe 460 3jet EcoSmart 9 l/min with thermostat
 # 27029400

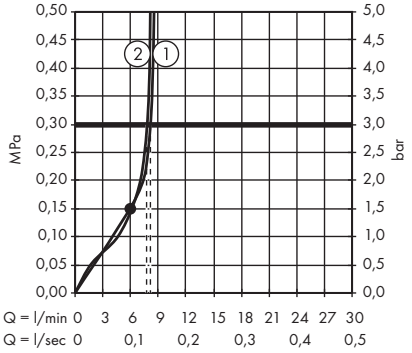

1. Hand shower
2. Overhead shower

· Rainmaker Select Showerpipe 460 2jet with thermostat
 # 27109400

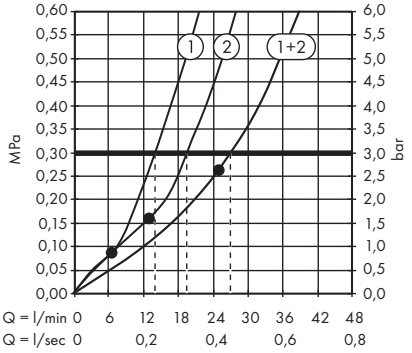

1. Hand shower
2. Overhead shower

· Rainmaker Select Showerpipe 460 2jet EcoSmart 9 l/min with thermostat
 # 27028400

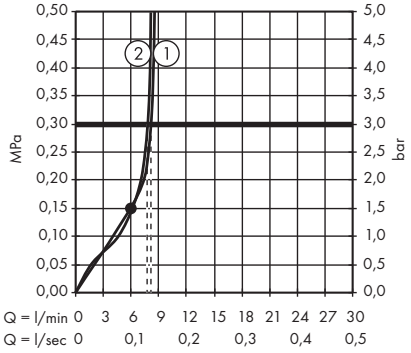

1. Hand shower
2. Overhead shower

· Raindance Select E Showerpipe 300 3jet with ShowerTablet Select 300
 # 27127000, 27127400

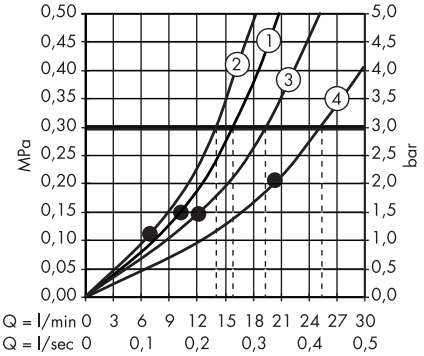

1. Overhead shower Rain / RainAir
2. Hand shower
3. Overhead shower RainStream
4. Overhead shower Rain + RainStream / RainAir + RainStream

· Raindance Select E Showerpipe 300 2jet with ShowerTablet Select 300
 # 27126000, 27126400

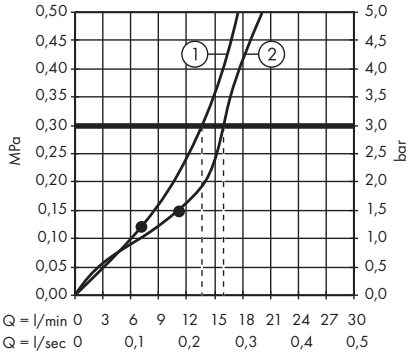

1. Hand shower
2. Overhead shower

· Raindance Select E Showerpipe 300 2jet EcoSmart 9 l/min with ShowerTablet Select 300
 # 27283000, 27283400

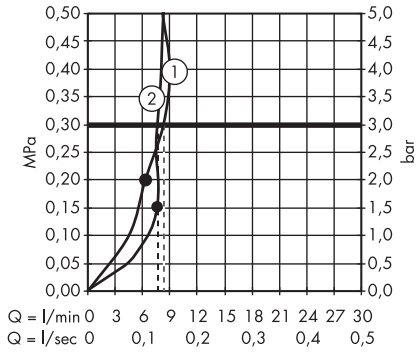

1. Hand shower
2. Overhead shower

· Raindance Select S Showerpipe 300 2jet with thermostat
 # 27133000, 27133400

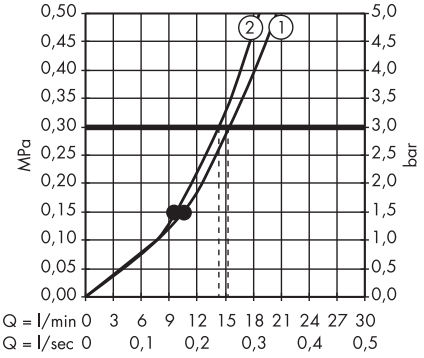

1. Overhead shower
2. Hand shower

· Raindance Select S Showerpipe 240 2jet with thermostat
 # 27129000, 27129400

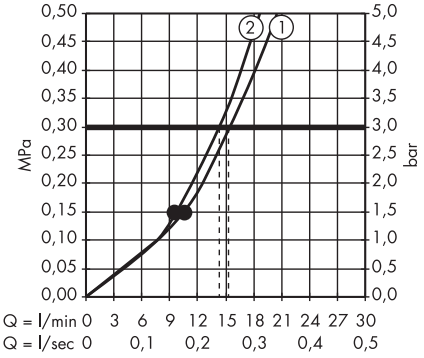

1. Overhead shower
2. Hand shower

The consumption was measured in combination with the appropriate fittings (thermostat/mixer/in-wall valve) to reflect actual application in practice.

· Raindance Select S Showerpipe 240 1jet PowderRain with thermostat
 # 27633000, 27633140, 27633340, 27633670, 27633700, 27633990

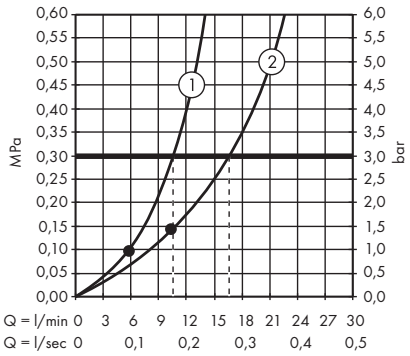

1. Hand shower
2. Overhead shower

· Raindance E Showerpipe 360 1jet with thermostat
 # 27112000, 27112400

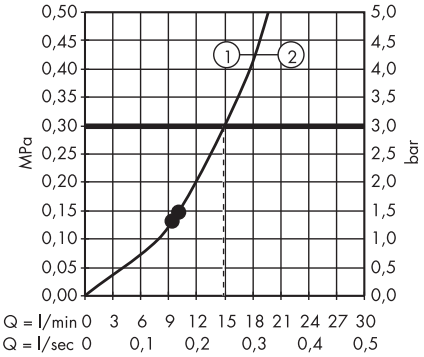

1. Overhead shower
2. Hand shower

· Raindance E Showerpipe 360 1jet EcoSmart 9 l/min with thermostat
 # 27286000, 27286400

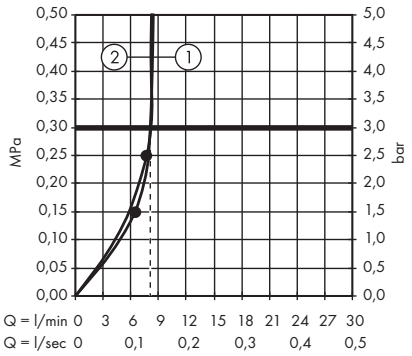

1. Hand shower
2. Overhead shower

· Raindance E Showerpipe 360 1jet with bath thermostat
 # 27113000, 27113400

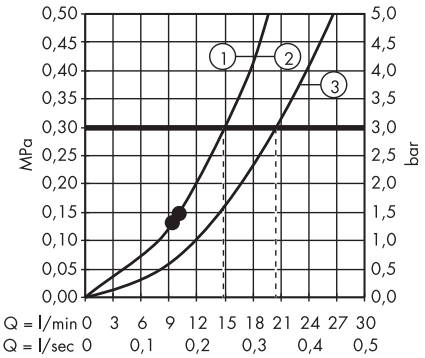

1. Hand shower
2. Overhead shower
3. Bath spout

· Raindance E Showerpipe 360 1jet with ShowerTablet Select 300
 # 27288000, 27288400

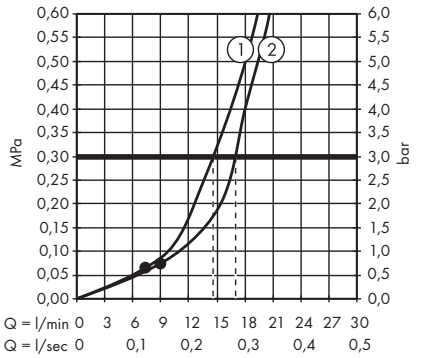

1. Hand shower
2. Overhead shower

· Raindance E Showerpipe 300 1jet with ShowerTablet 600
 # 27363000

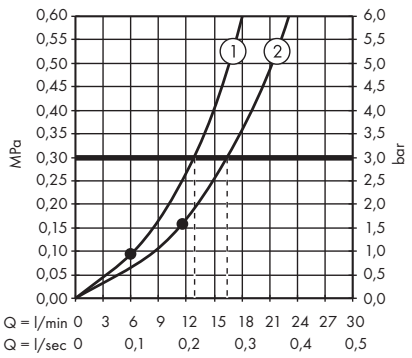

1. Hand shower
2. Overhead shower

· Raindance E Showerpipe 300 1jet EcoSmart 9 l/min with ShowerTablet 600
 # 27364000

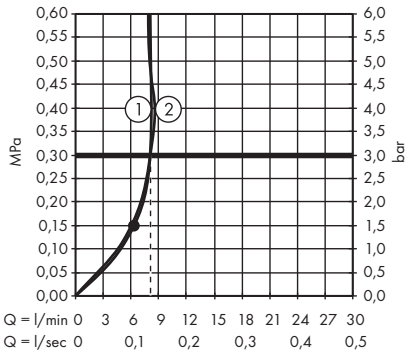

1. Hand shower
2. Overhead shower

· Raindance E Showerpipe 300 1jet with ShowerTablet 350
 # 27361000

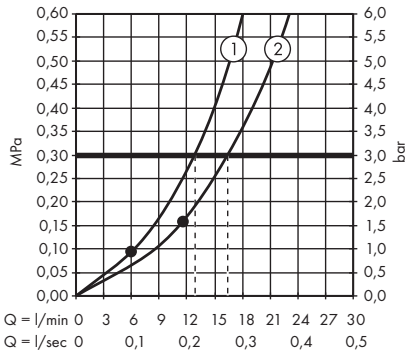

1. Hand shower
2. Overhead shower

· Raindance E Showerpipe 300 1jet EcoSmart 9 l/min with ShowerTablet 350
 # 27362000

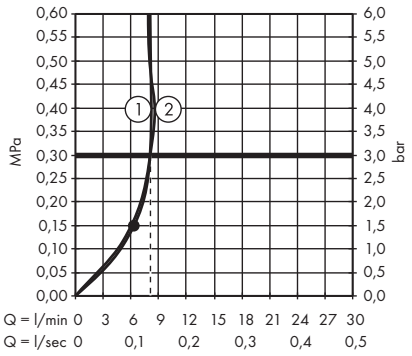

1. Hand shower
2. Overhead shower

· Raindance S Showerpipe 300 1jet with thermostat
 # 27114000

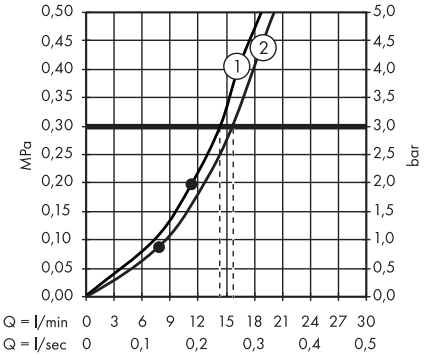

1. Overhead shower
2. Hand shower

· Raindance S Showerpipe 240 1jet with thermostat
 # 27115000

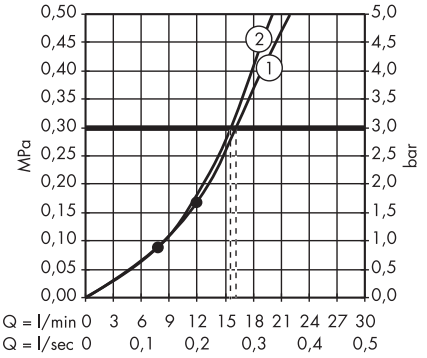

1. Overhead shower
2. Hand shower

· Raindance S Showerpipe 240 1jet EcoSmart 9 l/min with thermostat
 # 27116000

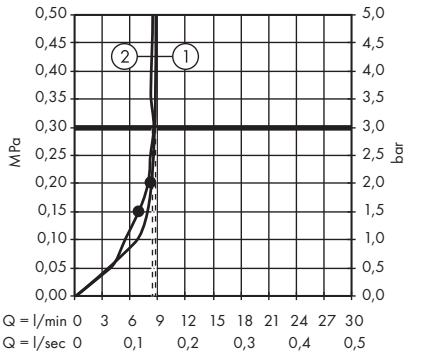

1. Overhead shower
2. Hand shower

· Raindance S Showerpipe 240 1jet with bath thermostat
 # 27117000

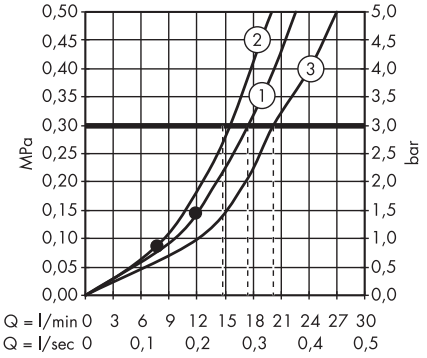

1. Overhead shower
2. Hand shower
3. Bath spout

· Croma Select E Showerpipe 180 2jet with thermostat
 # 27256400

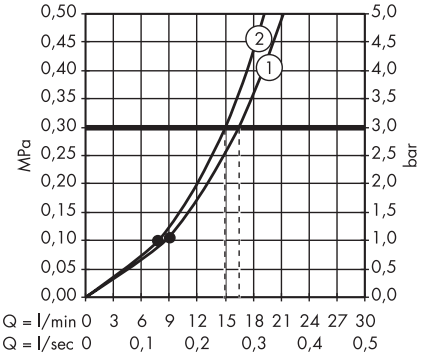

1. Overhead shower
2. Hand shower

· Croma Select E Showerpipe 180 2jet EcoSmart 9 l/min with thermostat
 # 27257400

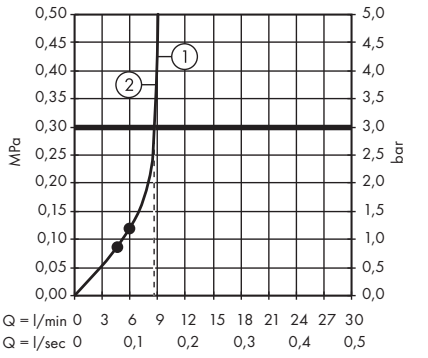

1. Overhead shower
2. Hand shower

· Croma Select E Showerpipe 180 2jet with bath thermostat
 # 27352400

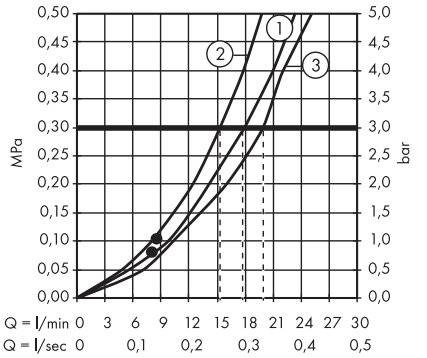

1. Overhead shower
2. Hand shower
3. Bath spout

· Croma Select E Showerpipe 180 2jet with single lever mixer
 # 27258400

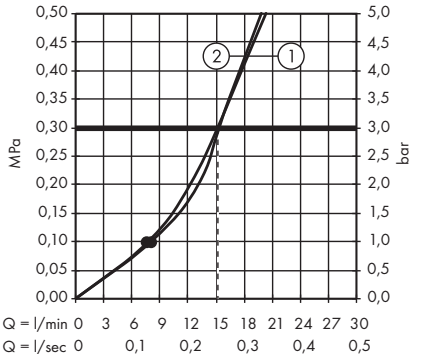

1. Overhead shower
2. Hand shower

· Croma Select E SemiPipe Multi with thermostat
 # 27248400

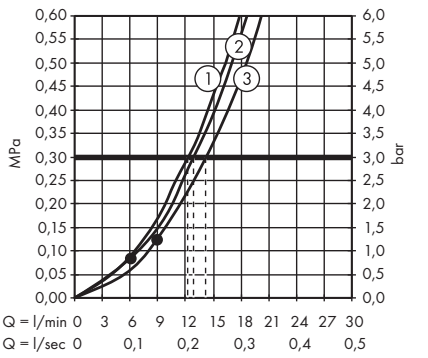

1. Massage
2. IntenseRain
3. SoftRain

The consumption was measured in combination with the appropriate fittings (thermostat/mixer/in-wall valve) to reflect actual application in practice.

· Croma Select S Showerpipe 280 1jet with thermostat
 # 26790000

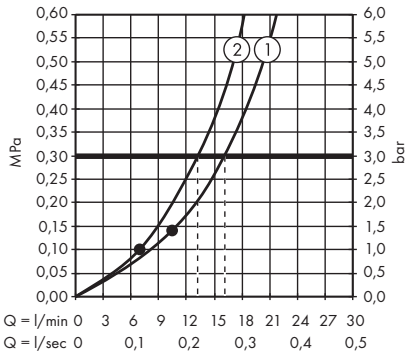

1. Overhead shower
2. Hand shower

· Croma Select S Showerpipe 280 1jet EcoSmart 9 l/min with thermostat
 # 26794000

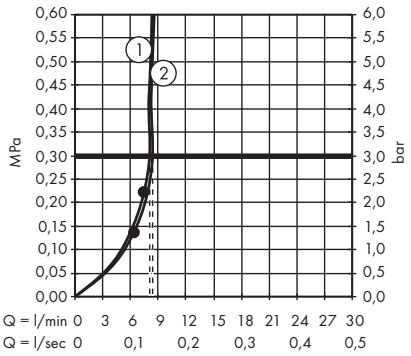

1. Overhead shower
2. Hand shower

· Croma Select S Showerpipe 280 1jet with bath thermostat
 # 26792000

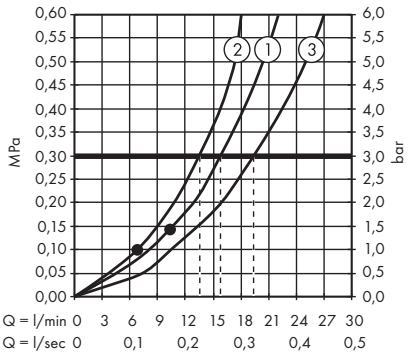

1. Overhead shower
2. Hand shower
3. Bath spout

· Croma Select S Showerpipe 280 1jet with single lever mixer
 # 26791000

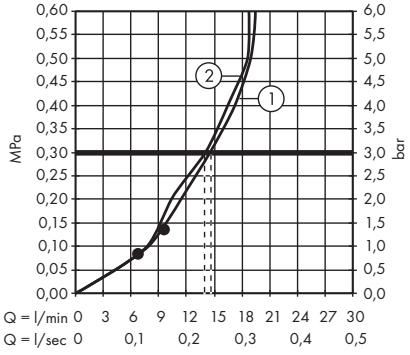

1. Overhead shower
2. Hand shower

· Croma Select S Showerpipe 280 1jet Reno
 # 26793000

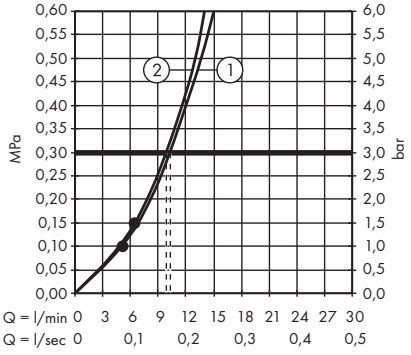

1. Hand shower
2. Overhead shower

· Croma Select S Showerpipe 180 2jet with thermostat
 # 27253400

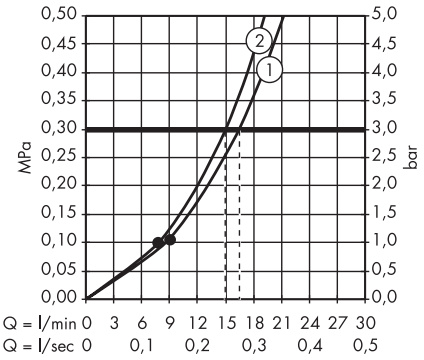

1. Overhead shower
2. Hand shower

· Croma Select S Showerpipe 180 2jet EcoSmart 9 l/min with thermostat
 # 27254400

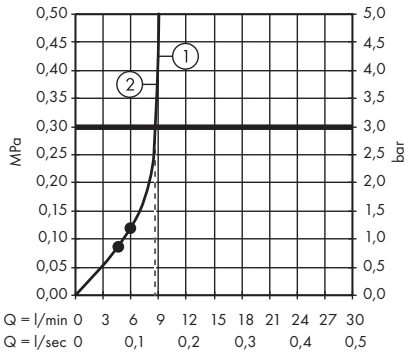

1. Overhead shower
2. Hand shower

· Croma Select S Showerpipe 180 2jet with bath thermostat
 # 27351400

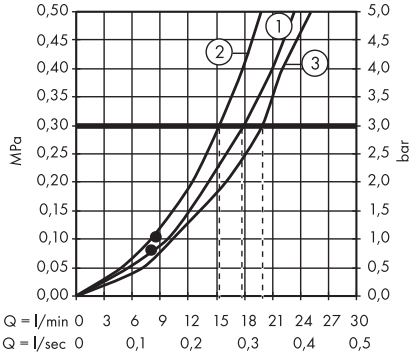

1. Overhead shower
2. Hand shower
3. Bath spout

· Croma Select S Showerpipe 180 2jet with single lever mixer
 # 27255400

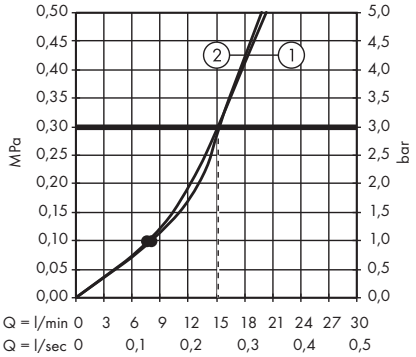

1. Overhead shower
2. Hand shower

· Croma Select S SemiPipe Multi with thermostat
 # 27247400

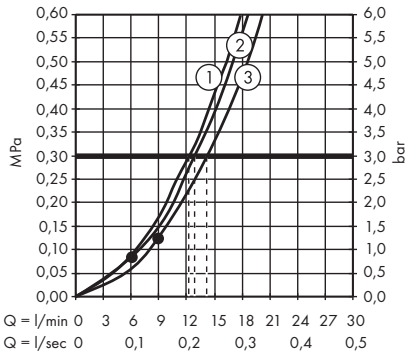

1. Massage
2. IntenseRain
3. SoftRain

· Croma E Showerpipe 280 1jet with thermostat
 # 27630000

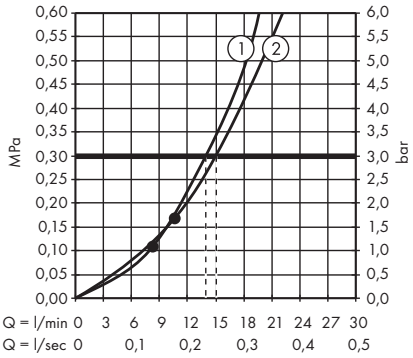

1. Hand shower
2. Overhead shower

· Croma E Showerpipe 280 1jet EcoSmart with thermostat
 # 27660000

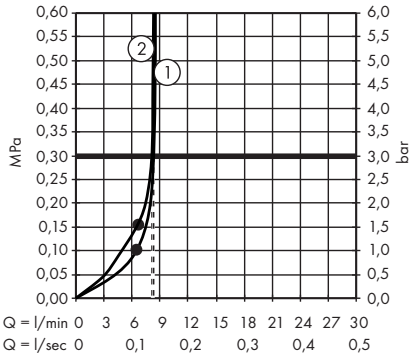

1. Hand shower
2. Overhead shower

· Croma E Showerpipe 280 1jet with bath thermostat
 # 27687000

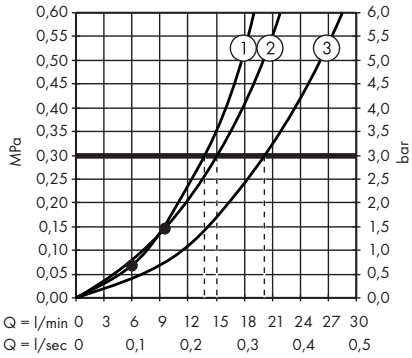

1. Hand shower
2. Overhead shower
3. Bath spout

· Croma Showerpipe 220 1jet with thermostat
 # 27185000

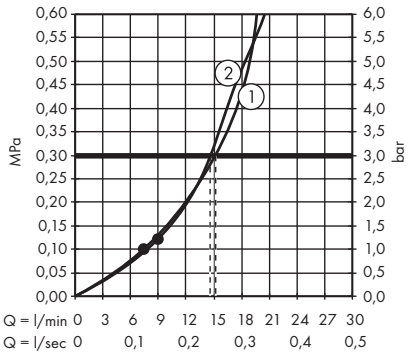

1. Overhead shower
2. Hand shower

· Croma Showerpipe 220 1jet EcoSmart 9 l/ min with thermostat
 # 27188000

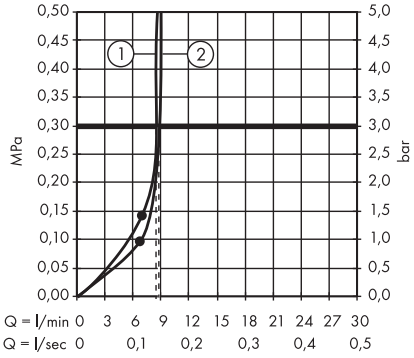

1. Overhead shower
2. Hand shower

· Croma Showerpipe 220 1jet with bath thermostat
 # 27223000

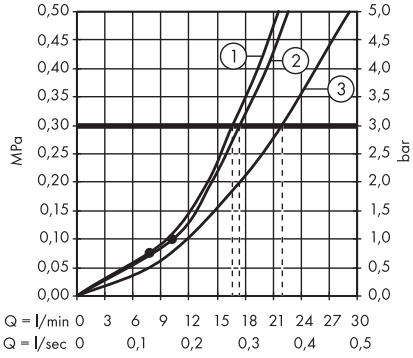

1. Overhead shower
2. Hand shower
3. Bath spout

· Croma Showerpipe 220 1jet with single lever mixer
 # 27222000

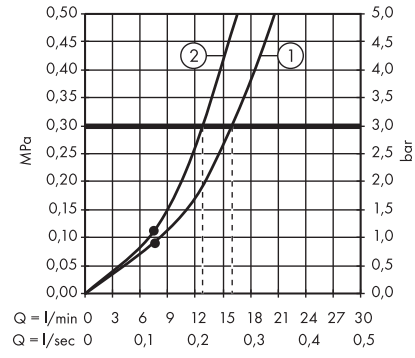

1. Overhead shower
2. Hand shower

· Croma Showerpipe 220 1jet Reno
 # 27224000

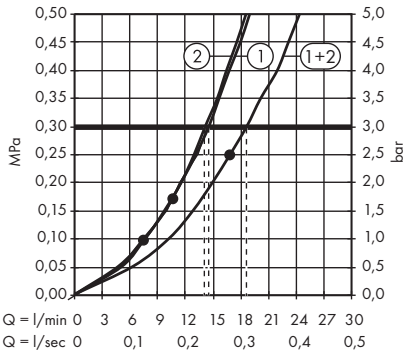

1. Hand shower
2. Overhead shower

The consumption was measured in combination with the appropriate fittings (thermostat/mixer/in-wall valve) to reflect actual application in practice.

· Croma Showerpipe 160 1jet with thermostat
 # 27135000

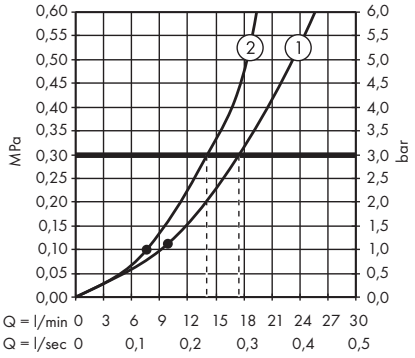

1. Overhead shower
2. Hand shower

· Croma Showerpipe 160 1jet with single lever mixer
 # 27154000

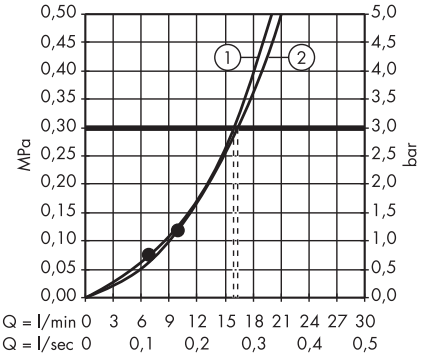

1. Hand shower
2. Overhead shower

· Crometta E Showerpipe 240 1jet with thermostat
 # 27271000

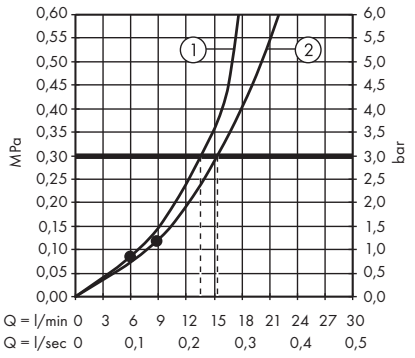

1. Hand shower
2. Overhead shower

· Crometta E Showerpipe 240 1jet EcoSmart 9 l/ min with thermostat
 # 27281000

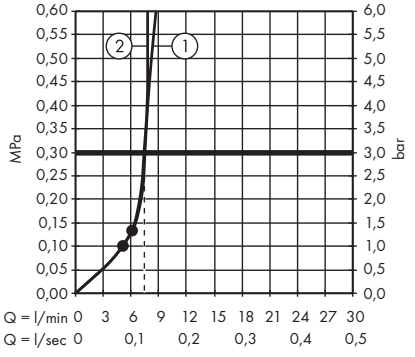

1. Hand shower
2. Overhead shower

· Crometta E Showerpipe 240 1jet with bath thermostat
 # 27298000

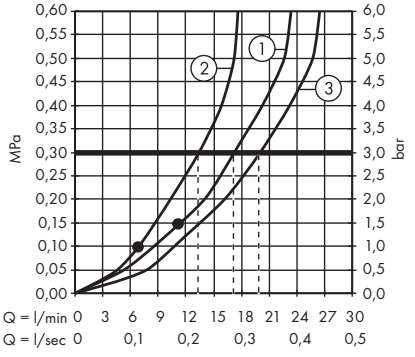

1. Overhead shower
2. Hand shower
3. Bath spout

· Crometta E Showerpipe 240 1jet with single lever mixer
 # 27284000

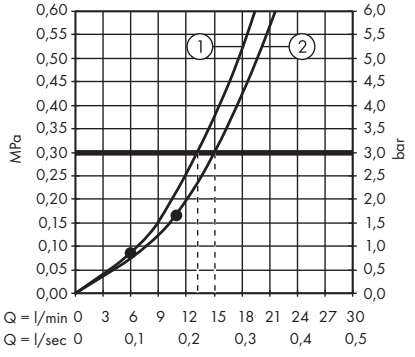

1. Hand shower
2. Overhead shower

· Crometta E Showerpipe 240 1jet EcoSmart 9 l/ min Reno
 # 27289000

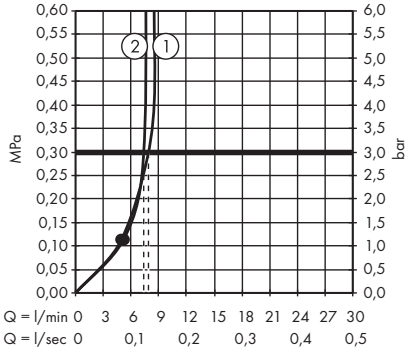

1. Hand shower
2. Overhead shower

· Crometta S Showerpipe 240 1jet with thermostat
 # 27267000

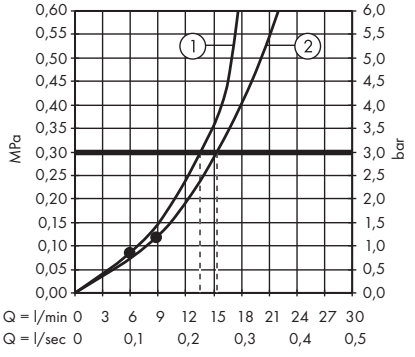

1. Hand shower
2. Overhead shower

· Crometta S Showerpipe 240 1jet EcoSmart 9 l/ min with thermostat
 # 27268000

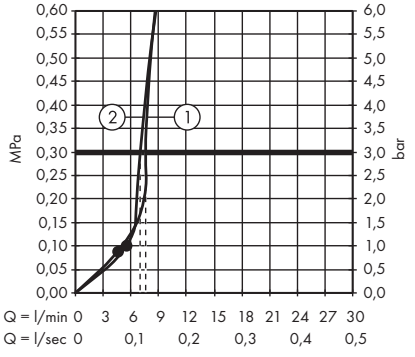

1. Hand shower
2. Overhead shower

· Crometta S Showerpipe 240 1jet with bath thermostat
 # 27320000

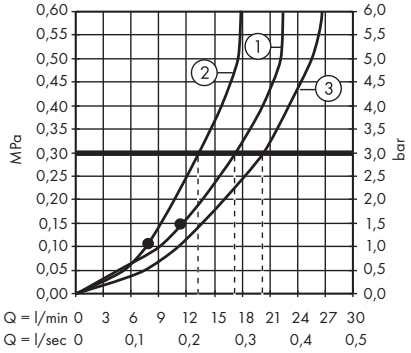

1. Overhead shower
2. Hand shower
3. Bath spout

· Crometta S Showerpipe 240 1jet with single lever mixer
 # 27269000

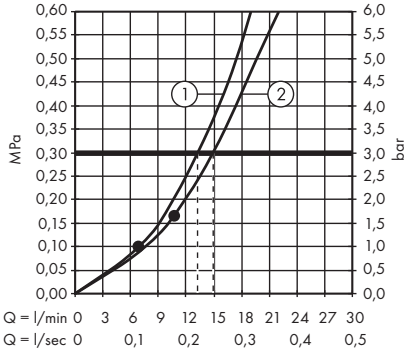

1. Hand shower
2. Overhead shower

· Crometta S Showerpipe 240 1jet EcoSmart 9 l/ min Reno
 # 27270000

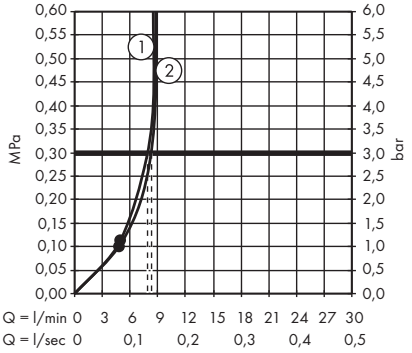

1. Hand shower
2. Overhead shower

· Crometta Showerpipe 160 1jet with thermostat
 # 27264400

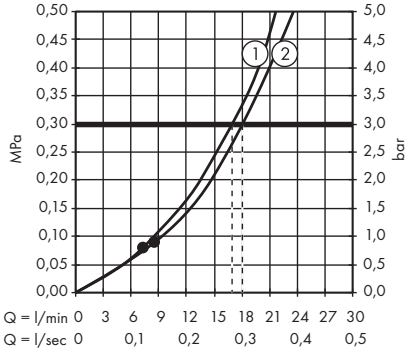

1. Hand shower
2. Overhead shower

· Crometta Showerpipe 160 1jet EcoSmart 9 l/ min with thermostat
 # 27265400

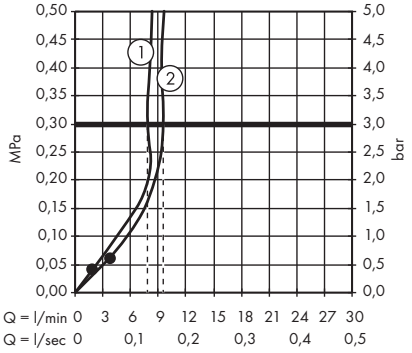

1. Hand shower
2. Overhead shower

· Crometta Showerpipe 160 1jet with single lever mixer
 # 27266400

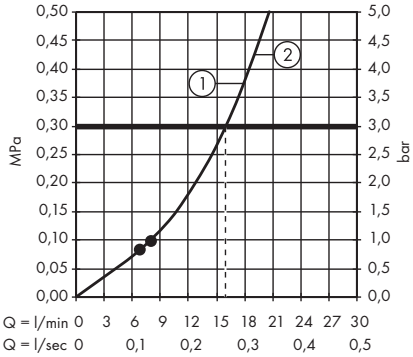

1. Hand shower
2. Overhead shower

· Raindance Shower panel Lift 180 2jet for exposed installation
 # 27008000, 27008400

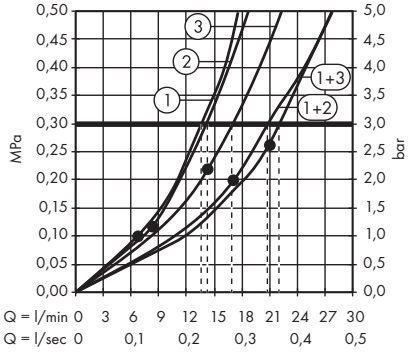

1. Hand shower
2. Rain
3. Rainflow

General Terms and Conditions

I. Scope

1. These general terms and conditions (AGB) of Hansgrohe SE (Hansgrohe) apply, unless otherwise stated, to all purchase and work and materials contracts as well as other orders (Order) between Hansgrohe and customers who are not consumers in accordance with Section 13 of the German Civil Code (BGB) (Buyer). Differing general terms and conditions of the buyer are not recognised even if they are not expressly contradicted.
2. The general terms and conditions also apply for future business relations with the same buyer even if they are not expressly agreed again. Unless otherwise stipulated, the general terms and conditions are valid as amended at the time the buyer places the order or also in the version published most recently in text form.

II. Contract closing

1. The offers of Hansgrohe are subject to change unless they are expressly identified as binding in the offer text. The order placed by the buyer is considered a binding contractual offer that remains valid for at least 8 days in the absence of a deviating provision. The contract only comes into effect if Hausgrohe provides the buyer with written (including text form) confirmation in relation to the order.
2. Hansgrohe only assumes a guarantee to end consumers in accordance with a separate guarantee declaration that is designated as such.
3. The documents such as figures and drawings provided by Hansgrohe as part of the contract negotiation stage as well as the technical information and specifications made by Hansgrohe are binding. Technical, constructional or other changes to the order or work are permitted if and to the extent that they are reasonable for the buyer.
4. Individual agreements including trade terms have priority over the general terms and conditions. A written contract or the written confirmation of Hansgrohe is essential for the content of these agreements.

III. Scope and place of delivery, transport and transfer of risk

1. A delivery ex works or a delivery to another shipping location of Hansgrohe disclosed to the buyer is generally agreed and this location is the place of performance of the delivery and any supplementary performance. The risk is transferred to the buyer at the latest upon the product being dispatched. If the delivery is delayed due to the behaviour of the buyer or as a result of a circumstance beyond Hansgrohe's control, the risk is transferred to the buyer upon receiving notification that the products are ready for shipment.
2. Unless otherwise stipulated, the buyer must take out travel insurance at his/her own expense and cost based on standard transport insurance conditions that covers the risk of transporting the product that is part of the order from the shipping location to the agreed destination. The buyer bears the transport costs in accordance with Point V.5.
3. In the event that an agreement is reached on trade terms, the latest version of Incoterms shall apply.
4. Hansgrohe is entitled to partial deliveries and invoices at an acceptable level prior to the expiry of the delivery period.
5. If the delivery or shipment of the delivered item is delayed at the request of the buyer or as a result of circumstances that the buyer bears the risk and responsibility for, the buyer must refund Hansgrohe the costs incurred as a result of storing the item and the accrued interest on the capital deployed for the delivered item. In the case of storage by Hansgrohe, the entitlement amounts to at least 0.5% of the still outstanding invoice amount for each outstanding month, starting with the month after notice has been given that the products are ready for shipment. The customer still retains the right to prove that no damage or substantially less damage has occurred. However, after having set a commensurate subsequent delivery term and after the unsuccessful expiry of this term, Hansgrohe is entitled to use the delivered item for another purpose and to deliver a replacement item to the buyer subject to a reasonably extended deadline or to withdraw from the agreement.
6. Hansgrohe will procure that the products shipped by Hansgrohe to the buyer comply with the laws and regulations of the country / countries designated by the buyer. In case the buyer - after receipt of the products - exports the products to third countries it is the obligation of the buyer to make sure that the products comply with the applicable local laws and regulations of such countries with regard to the products. If, however, the buyer chooses to export products to third countries, the buyer is solely responsible for any and all liability resulting from any non-compliance of the products.

IV. Delivery term and operational disruptions

1. Delivery terms start to apply at the earliest once all documentation which is required for determining the content of the order has been received if the buyer has to obtain this documentation according to the agreement and upon receipt of the down-payment. A delivery term is complied with if the shipment is dispatched within the deadline and the buyer has been notified that the products are ready for shipment.
2. Delivery terms are extended in the event of circumstances occurring which Hansgrohe or its suppliers are not responsible for and which do not have a substantial influence on the production or delivery of the product (e.g. labour disputes, force majeure and other operational breakdowns that are beyond a party's control) for the duration of the operational disruption. Hansgrohe is obligated to inform the buyer of the anticipated duration of the operational disruption and to state a new delivery date. If the product can also not be delivered within the new delivery period, both parties are entitled to withdraw from the agreement in whole or in part; any payment already made by the buyer is immediately refunded. Rights to demand compensation in lieu of performance in accordance with Point X. and the statutory rights of Hansgrohe, especially if a party is no longer obligated to perform its obligations (e.g. due to impossibility), remain unaffected.
3. The conditions for the delay in delivery are based on the statutory provisions irrespective of the existing regulations. Deviating from this however, a written warning is required from the buyer in all cases.

V. Prices and subsidiary expenses

1. Deliveries are made at current prices when the contract is concluded in accordance with the order confirmation from Hansgrohe. All prices apply ex works / dispatch location. All prices are quoted in euros unless otherwise stated and other additional expenses (e.g. installation and instruction costs), statutory value added tax and other statutory fees (e.g. duties, fees) are disclosed at the currently prevailing rate.
2. Hansgrohe reserves the right to increase fixed prices for a period of more than 4 months if cost increases, especially those owing to collective wage agreements, marketable cost prices or material price increases occur after the conclusion of the agreement. These prices are demonstrated to the customer on request.
3. Hansgrohe calculates a minimum quantity surcharge of EUR 10 for an order value of below EUR 50. Purchase quantities that are smaller than the stipulated packaging units are processed at a surcharge of 10% on the net product value.
4. If the delivery is made to a third party, a surcharge of 10% on the net product value is calculated.
5. Orders with a net product value exceeding EUR 750 are dispatched carriage paid, while the freight costs for a net product value below EUR 750 are charged to the customer in the invoice. Express costs and fees for posted goods shipments are always charged to the customer.

VI. Payment and default

1. As stipulated in the invoice, payments must be made without any deduction immediately after receiving said invoice and delivering the product to Hansgrohe. Hansgrohe is however authorised to carry out the delivery in question in whole or in part at any time against prepayment. A proviso to this effect is asserted at the latest at the time the order is confirmed. Hansgrohe expressly reserves the right to accept cheques. Cheques are only accepted on account of payment and only apply as a payment when honoured. All payments shall be made free of charge. The buyer bears the discount, collection and other bank charges for cheques without express agreement. Payments are initially set off against costs, then against interest and then used to settle the oldest principal debt.
2. In the event of a default, default interest at the statutory rate, at least 9% per year, is calculated; it remains possible to provide proof of less damage at the level of the statutory interest rate.
3. The buyer shall only be entitled to offset claims or retention rights in relation to the claims of Hansgrohe if the counterclaim is uncontested or a final decision has been reached. This does not apply if the counterclaim relates directly to the main obligation of Hansgrohe from the same agreement.
4. The assignment of claims is subject to approval from Hansgrohe.

5. If it becomes evident after concluding the agreement or delivering the product that the buyer is not or is no longer creditworthy, e.g. enforcement measures are being initiated against him/her, due invoices are not being paid despite receiving a reminder or any other capital deterioration occurs, Hansgrohe can immediately assert claims which are not yet due or such claims for which a cheque has been provided. In these instances, Hansgrohe can request an advance payment, a collateral security or a delivery that will only be carried out based on cash on delivery for the product that has yet to be delivered. If the buyer fails to comply with the request within the statutory deadline that it has been set, Hansgrohe is entitled to withdraw from the agreement. The statutory rights of Hansgrohe (especially in accordance with Section 321 BGB) remain unaffected.

VII. Title retention

1. Hansgrohe retains ownership of the delivered product until all claims resulting from the business relationship with the buyer at the time the agreement is concluded are settled including all claims from follow-up contracts, repeat orders or spare parts orders occurring at this time. If the value of all security rights to which Hansgrohe is entitled exceeds the value of all secured claims by more than 10%, Hansgrohe shall release a corresponding proportion of the security rights at the request of the buyer.
2. If the buyer acts in a way contrary to the contractual obligations, especially in the event of a default in payment, Hansgrohe is entitled to take back the reserved product. In the event that Hansgrohe takes back or seizes the reserved product, it is not possible to withdraw from the agreement unless Hansgrohe expressly confirms this in writing. Hansgrohe is authorised to sell the product and the sales proceeds must be taken into account for the liabilities of the buyer less utilisation costs accrued. The buyer is obligated to handle the reserved product with care and to store it separately from other products. It is also obligated to insure this product sufficiently at its own expense against damage resulting from fire, water, storm, robbery and theft at the new value. Any security claims that arise in the event of a loss are to be assigned to Hansgrohe. If maintenance and inspection work is required, the buyer must carry out this work on time and at its own expense.
3. The buyer may neither pledge the reserved product nor transfer it by way of security. In the event of seizures or other encroachments by third parties, the buyer must inform Hansgrohe immediately in writing and provide Hansgrohe with all information and documentation which are required for preserving the rights of Hansgrohe. Enforcement officers or third parties are to be informed of Hansgrohe's ownership. If a third party is unable to refund Hansgrohe the judicial and extra-judicial costs of third party proceedings, the buyer is liable to Hansgrohe for the loss incurred subject to the assertion of further claims due to damage, change or destruction to the item itself.
4. The buyer may sell and/or process the reserved product in the course of ordinary business operations provided that Hansgrohe does not assert any rights arising from the retention of title against the buyer. The buyer shall assign to Hansgrohe all claims up to the final invoice amount including value added tax which it has accrued from the resale to its customers or third parties irrespective of whether the item has been resold with or without further processing. Hansgrohe accepts the assignment. In the event of a current account relationship between the buyer and its customer, the claim assigned to Hansgrohe by the buyer in advance also applies to any acknowledged outstanding balance and, in the event of the customer becoming bankrupt, it applies to the „causal" balance which exists at the time. The buyer may even collect the receivables after the assignment. This does not affect the entitlement of Hansgrohe to collect the claim itself. Hansgrohe will not collect the claim itself if the buyer meets its payment obligations resulting from the proceeds collected, is not overdue with its payments and there is no application for opening insolvency proceedings.
5. The buyer is obligated to provide Hansgrohe with a precise list of claims to which it is entitled with the name and address of the customer, the amount of the individual claims, invoice data, etc., to give Hansgrohe all the information required for asserting the assigned claim, to allow this information to be assessed and to disclose the assignment to the customers.
6. The buyer now declares its consent that the persons commissioned with the task of collecting the reserved product may enter the property or the building where the reserved product is located on foot or in a vehicle in order to pick up said reserved product.
7. The buyer always processes or transforms the delivery item for Hansgrohe. If the item is processed with other objects that do not belong to Hansgrohe, Hansgrohe shall become co-owner of the new item in the ratio of the value of the delivered item to the other processed objects at the time of processing. The same rules shall apply to the item produced through processing as for the delivered item subject to retention of title. If the item is processed, mixed or combined in a way that the buyer's item is to be considered as the main item, it is considered as agreed that the buyer assigns proportional co-ownership to Hansgrohe. The buyer shall assign the sole ownership or co-ownership resulting therefrom to Hansgrohe.

VIII. Claims for defects – period of limitation

1. The statutory regulations shall apply for the rights of the buyer in the event of material defects and defects of title unless otherwise determined below. The special statutory regulations for final deliveries of products to a consumer shall remain unaffected (supplier recourse in accordance with Sections 478, 479 BGB); however the regulations in Point X shall apply for compensating damages in the event of supplier recourse.
2. The buyer may only make claims for defects if it duly meets the statutory inspection and complaint obligations.
3. If a delivery item is defective, the buyer has the following rights:
   a) Hansgrohe is obligated to rectify the fault and will do this at its own discretion by eliminating the defect through repair work or by delivering an item that is free from defects.
   b) If the rectification of defects is unsuccessful, the buyer is entitled to withdraw from the agreement or reduce the purchase price. A rescission shall be ruled out if the breach of duty on the part of Hansgrohe is only minor in nature. The buyer shall also be entitled to claim compensation or reimbursement of expenses incurred in vain in the event of defects solely in accordance with the provisions of Point X.
   c) Rectifying the fault involves neither enhancing the defective product nor incorporating a new or repaired product unless Hansgrohe was initially already obligated to incorporate a new or repaired product.
   d) Hansgrohe shall bear the expenses incurred for examining and rectifying the defect, especially labour and material costs (not: expansion and integration costs as well as costs for transporting the product to the place where the fault is to be rectified) if a defect has actually occurred. Hansgrohe may otherwise request compensation from the buyer for the costs (especially examination and transportation costs) resulting from the unjustified request to rectify a fault unless the lack of a defect was not evident to the buyer.
   e) The buyer must inform Hansgrohe of the time and facilities it requires for carrying out the repair work and replacement deliveries required by Hansgrohe. Hansgrohe is otherwise exempt from any liability for the resulting consequences. If the buyer requires the express deployment of a technician or for work to be carried out outside normal working hours for operational reasons which involve additional costs for Hansgrohe, it must bear the extra costs incurred as a result of this (e.g. overtime surcharges, travelling longer distances).
   f) A warranty is provided for replacements and improvements to the same extent as for the original delivery item, however with a time limit until the end of the warranty period of the original delivery item.
4. The buyer is solely responsible for damage resulting from natural wear and tear, inappropriate or improper use, incorrect assembly or commissioning by the buyer or third party, incorrect or negligent handling, excessive use, unsuitable operating equipment or chemical, electrochemical or electrical influences provided that Hansgrohe is not culpable for this.
5. Deviating from Section 438 para. 1 no. 3 BGB, the general period of limitation for claims resulting from material and legal defects (warranty period) is one year following delivery. After the warranty period has expired, claims for defects shall no longer apply. Separate statutory regulations governing limitation (especially Sections 438 para. 1 no. 1 and 2, para. 3, 444, 479 BGB) shall remain unaffected. Compensation claims in accordance with Point X. become statute-barred solely in accordance with statutory provisions.

IX. Returns

1. Products delivered by Hansgrohe are not taken back as a rule unless the buyer is entitled to compensation (e.g. due to rescission in the event of a failed subsequent delivery).
2. If Hansgrohe is prepared to make an exception and take the product back, an appropriate fee (usually 25% of the net product value) is charged for this as part of an appropriate agreement. The transport risk and transportation costs are borne by the buyer.

General Terms and Conditions

X. Liability for compensation

1. Hansgrohe is liable for compensation in accordance with the statutory provisions unless otherwise stated below. In the event of breaches of duty – regardless of the legal reason – Hansgrohe shall be responsible for intent and gross negligence. Hansgrohe is only liable in the event of simple negligence:
   a) for damages resulting from loss of life, physical injury or damage to health and
   b) for damages resulting from the substantial infringement of important contractual obligations (obligations which must be fulfilled before the contract is executed properly and which the contractual partner may, as a matter of routine, trust that they shall be met); the liability in this case is however restricted to compensation for the typically foreseeable damage.
2. The above limitations of liability also apply in favour of the employers, employees, representatives and assistants of Hansgrohe. Only the statutory regulations apply for claims in accordance with the German Product Liability Act.
3. Exclusions or limitations of liability do not apply in so far as Hansgrohe has failed to disclose a fault with fraudulent intent or has provided a guarantee for the condition of an item.

XI. Rescission of the purchase agreement

1. If the purchase agreement is rescinded (e.g. due to one of the contractual parties withdrawing), the buyer is obligated to return the delivery item to Hansgrohe in advance regardless of any other development in accordance with the following clauses. Hansgrohe is entitled to collect the delivery item from the buyer's premises.
2. Hansgrohe may also request a reasonable payment from the buyer for the deterioration or destruction of the delivered item or for the delivered item, which is the risk and responsibility of the buyer, not being returned.
   Hansgrohe may also request payment for the use of the delivered item if the value of the delivered item has reduced between the completion of its installation and its direct repossession in full by Hansgrohe. This decrease in value is calculated from the difference between the total price specified in the order and the present value as calculated from the sales proceeds or if a sale is not possible from the estimate of a sworn authorised expert.

XII. Assignment

The assignment of rights and / or the transfer of the buyer's obligations stated in the agreement are not permitted without the written approval of Hansgrohe. Section 354a of the Commercial Code (HGB) shall remain unaffected.

XIII. Export control regulations

1. The delivery items may be subject to the export control regulations of the Federal Republic of Germany, the European Union, the United States of America or other states.
2. If the delivered item is exported abroad at a later date, the buyer is responsible for complying with the statutory provisions.

XIV.Competent court and applicable law

1. The law of the Federal Republic of Germany shall apply to these general terms and conditions and the contractual relationship between the parties excluding international common law, especially UN Purchasing Law. The choice of law also applies to non-contractual obligations that are closely linked to this agreement. The scope and scale also determine the choice of law in accordance with statutory provisions.
2. Stuttgart (Germany) is agreed as the exclusive competent court for agreements with buyers who have their head office in a member state in the European Union. All disputes that cannot be mutually agreed upon arising from or relating to agreements with buyers who have their head office outside the European Union shall be settled finally in accordance with the arbitration regulations of the Deutsches Institution für Schiedsgerichtsbarkeit e.V. Bonn (DIS) with the exclusion of the normal legal process. The place of arbitration is Stuttgart, Germany. The procedural law of this place shall apply if the arbitration regulations do not contain any corresponding provisions. The arbitration proceedings are conducted in German. The court of arbitration may also decide on the validity of this arbitration agreement.

General Terms and Conditions of Hansgrohe SE
Version: 01 April 2019

hansgrohe

hansgrohe
pro.hansgrohe-int.com

hansgrohe ComfortZone test
pro.hansgrohe-int.com/comfortzone-test

Spare parts shop
spares.hansgrohe.com

Planning-Data
pro.hansgrohe-int.com/planning-data

Find out more about the hansgrohe world at http://pro.hansgrohe-int.com

Find hansgrohe online and on social media.

hansgrohe Price Book 2019/2020 assortment bath and kitchen EX en-EN · Subject to change in the interest of technical advancement
Form No. 84121061 · 09/19/4.2 · Printed in Germany

4 059625 270615

MIX
Paper from responsible sources
FSC® C010156

Hansgrohe SE · P.O. Box 1145 · 77757 Schiltach/Germany
Tel. +49 7836 51-0 · Fax +49 7836 51-1300 · info@hansgrohe.com · www.hansgrohe.com