AXOR

PRICE BOOK 2024

Errors and omissions excepted.
Upon publication of this product catalogue, all previously published price books are no longer valid.
Figures given for dimensional drawings are in mm.
When installing the products, please follow the instructions in the installation manual.
All products are subject to availability. The availability may be temporarily impacted by material shortages, interruptions in the supply chain or other force majeure events.
Please contact us for further details.

The following general terms and conditions shall apply:
https://www.hansgrohe.com/terms-of-conditions

Contents

The AXOR Brand 6

Collections

AXOR One 48

AXOR Edge 70

AXOR MyEdition 86

AXOR Starck 108

AXOR Citterio 120

AXOR Citterio E 138

AXOR Citterio M 156

AXOR Uno 168

AXOR Montreux 186

Programs

AXOR ShowerComposition 198

AXOR Showers 208

AXOR Shower controls 260

AXOR Accessories 272

AXOR Electronic faucets 312

AXOR Wash basins and bathtubs 322

AXOR Wastes and overflows 340

AXOR Basic sets 348

Planning & Inspiration

Planning & Installation 370

AXOR Inspiration 384

AXOR Design Dictionary 396

Modern bathroom planning is increasingly about expressing personal style. For more than 30 years, AXOR has stood for the design of personal bathrooms. To this end, customers have access to an impressive range of around 2,000 products from the AXOR collections and AXOR programs. The collection and program overviews in the AXOR Product Catalog list all products – from classic to avantgarde – including the key sales arguments to get your customers on board with AXOR. With the AXOR FinishPlus and AXOR Signature customization services, AXOR offers even more options for designing individual bathrooms. Find out how AXOR uses new materials to turn the faucet into a sensuous experience in terms of feel and look in the chapter on customization. Support for shower planning with selected product combinations, as well as concrete installation tips, can be found in the Planning and Installation chapter. In the AXOR Inspiration chapter, you will find projects from all over the world that show how AXOR products contribute to the unique style of a hotel or residence. Our Design Lexicon serves as a reference for your sales meetings with design-savvy customers. Here, you will find explanations of the most important terms from the world of architecture and design.

For us, rooms are more than a home. They are sources of inspiration that turn everyday actions into conscious rituals. The objects used in the process reflect not just the taste, but also the personality of their inhabitants.

From personalities –

Our iconic objects for luxury bathrooms and kitchens are created in collaboration with some of the best designers of our time, whose ideas challenge our habits of perception and change our everyday lives. People who live individuality and understand design as an expression of personality.

for personalities

The bathroom and kitchen are among some of our most intimate living spaces, places where we often just take care of ourselves. The element of water we use to do so is a precious commodity. Through outstanding design, we give it a form that unmistakably expresses this appreciation.

FROM PERSONALITIES FOR PERSONALITIES

The AXOR Success Story

For more than 30 years, AXOR has been helping architects, interior designers, and discerning customers express their personalities. AXOR has permanently changed the design and understanding of faucets and bathrooms like no other brand has – from functional sanitary spaces to individual places of wellbeing.

In 1981, Klaus Grohe commissions the first designer faucet for the Hansgrohe Group: Allegroh, designed by Esslinger Design, origin of the famous Frog Design studio. The first faucet collection in color, UNO, becomes an innovative market sensation. In the 1990s, design becomes a hallmark of prestige, and Klaus Grohe discovers its potential for the sanitation industry. This marks the beginning of AXOR's success story as a design brand for luxurious products to make the bathroom and kitchen more personal – inspired and created by world-famous, renowned designers.

1993

Establishment of the AXOR Brand

2003

AXOR Citterio

1994 AXOR Starck: Presentation with Salon d'eau by Philippe Starck

2000 AXOR WaterDream with PHOENIX – an innovative concept bathroom

2003 AXOR Citterio

2004 AXOR Starck – Redesign

2005 AXOR WaterDream with Patricia Urquiola, Jean-Marie Massaud and Ronan & Erwan Bouroullec

2006 AXOR Massaud and AXOR Montreux

2007 AXOR Citterio M

2008 AXOR ShowerCollection – the first shower product range

2009 AXOR Urquiola

2012 AXOR Starck Organic

2013 AXOR WaterDream and product launch of AXOR Showers designed by Front and Nendo

2014

2014 AXOR Starck V, AXOR Citterio E and AXOR Universal Accessories

2015 AXOR One shower products designed by Barber Osgerby and AXOR WaterDream with the ÉCAL design school

2016 AXOR WaterDream "Create your own spout"

2017

AXOR Showers
PowderRain

2017 AXOR Uno redesign and AXOR Showers with the innovative PowderRain spray mode

2018 AXOR MyEdition

2019 AXOR Edge

2021

2021 AXOR One
AXOR Citterio lever handle variants
AXOR Universal Circular Accessoires

2022 AXOR Conscious Showers
AXOR Universal Rectangular Accessories
AXOR Starck Nature Shower Column

2023

2023 AXOR ShowerComposition
AXOR Suite Basins & Bathtub
AXOR Drain
AXOR One Matt White

Philippe Starck

DESIGN VISIONARY

Philippe Starck is one of the most well-known creators of our time. Subversive and poetic, unexpected and free-spirited, rebellious and political, Starck experiments with a mission and a vision: creation, whatever shape it takes, must make life better for the largest number of people possible. As a vision of a better world, his creations attest a responsibility for society and the environment and a love for humanity.

Barber Osgerby

AGENTS OF INTERACTION DESIGN

Barber Osgerby embody the philosophy of interaction design. They stand for the interaction of the user with the product – what they see, hear and need. An art of design that's led to international public commissions and international awards, including the title of Royal Designer for Industry and the Order of the British Empire.

Jean-Marie Massaud

DESIGN ART THAT CONNECTS PEOPLE AND SPACES

Massaud's unmistakable style provides refreshing stimulation – from product design to architecture. His creations are meant to touch people and provide a better place to live. Strongly influenced by the beauty and utility of nature, he creates synergies between people, design, and space.

Antonio Citterio

MASTER OF ELEGANCE

Nobody else has had an impact on Italian design like Antonio Citterio. As an architect, designer and perfectionist, he creates luxurious objects, interiors and architectural concepts for leading international brands. His signature shows an uncompromising combination of timeless forms and high-quality materials, always under the credo of perfection, of Italian elegance.

Patricia Urquiola

VIRTUOSA OF STYLE FUSION

The Spanish designer enriches the international architecture and design scenes with her feminine design objects. She skillfully combines styles, patterns and materials. She surprises with floral decor, a sensual feel and arouses curiosity with her creations.

PHOENIX

DESIGN FOR REAL LIFE

PHOENIX's creations are tailored to people's real needs and desires in their everyday lives. Touching and forward-looking, always driven by logic, morality, and magic.

Nendo

POETIC DESIGN FROM JAPAN

Oki Sato's creations break with convention. And are easy to understand. The name of his office translates as "modeling clay." An indication that his designs are created in a very playful way. This approach has put him at the top of the international design scene.

Front

THE SWEDISH "AVANTGARDISTES"

Their design isn't typically Scandinavian. It is experimental, a play with visual effects inspired by fashion, film, and science. Their trademark is their ironic point of view and the joy of surprise. Qualities that have the international design scene buzzing.

Why

FIVE REASONS TO CHOOSE AXOR

01 Design diversity

AXOR collaborates with internationally renowned designers. With their highly distinct signatures, they shape the great stylistic diversity and product depth of the AXOR range. Their design approaches set standards again and again – in terms of their avantgarde designs, which are innovative and timeless at the same time. As part of AXOR WaterDreams, designers from completely different disciplines create their vision of the bathroom of the future, completely detached from a product-oriented development. With their ideas, they provide new inspiration for the development of the space, its use, and matching products.

In the following collections, unique water designs create extraordinary haptic and visual experiences – with innovative spray modes and a completely new way of presenting water:

- AXOR Massaud with a natural looking waterfall
- AXOR Starck Organic with the gentle shower spray on a faucet for the first time
- AXOR Starck V with powerful water vortex
- AXOR MyEdition with PowderRain – fitting the faucet design

02 Individualization

The exclusive AXOR FinishPlus and AXOR Signature customization services meet customers' increasing demand for more options to customize bathroom products. With colored PVD surfaces and customized solutions, AXOR products become unmistakably unique.

03 Made in Germany

At AXOR's own factory at its headquarters in Schiltach, Germany, the first-class brand products are created with German engineering quality and a deep commitment to precision – in every detail. This know-how builds on the Hansgrohe Group's more than 120 years of experience, as well as the expertise of every single skilled worker. AXOR is also a pioneer in innovative manufacturing technologies, such as the latest generation diamond drilling machine for ultra-precision milling of surfaces in the AXOR Edge collection.

04 Worldwide presence

As part of the Hansgrohe Group, AXOR has 33 subsidiaries and 21 sales offices worldwide and supplies its products to over 146 countries. AXOR faucets, showers, and kitchen faucets can be found in the world's finest homes, hotels, and restaurants. International architects, planners, and builders trust AXOR quality in products and expert advice.

05 International design awards

AXOR's design achievements – marked by independent, internationally renowned industry experts – are confirmed by the numerous awards the brand has received for first-class product design since the very beginning. These include:

- Red Dot Best of Best for AXOR Edge
- German Design Award for AXOR MyEdition
- iF Design Award in Gold for AXOR ShowerComposition, AXOR One and AXOR Uno
- Green Design Award for AXOR Starck Organic

reddot design award

AXOR is dedicated to creating the highest quality products. Sustainably.

AXOR contributes to a more sustainable future by designing luxurious products for water-related spaces that will last a lifetime. The brand adheres to eco-design principles and seeks to promote sensible consumption.

As part of the Hansgrohe Group, AXOR is committed to Science-Based Targets. Developed exclusively in Europe, our products are designed to be timeless and built to last. Ninety percent of our portfolio is produced at the AXOR Centre for Excellence in Germany's Black Forest.

In 2022, the Hansgrohe Group switched all international production sites to green electricity, making all facilities carbon neutral. This enables annual savings of over 26,000 tons of CO2. In addition, the group plans to convert all water-consuming products to its "ECO" specifications by 2030, delivering the same exceptional performance with water-saving technologies.

As part of the Hansgrohe Group, AXOR is committed to supporting five UN Sustainable Development Goals.

Enduring design meant to last a lifetime

AXOR products are designed to be updatable throughout their service life. Any required maintenance or repairs can be easily performed without special tools. AXOR takes pride in its products' quality, which is why AXOR's manufacturer's warranty extends well beyond any legally required timespan. To ensure a secure investment, AXOR guarantees the availability of spare parts for our products for fifteen years–five years more than the legal requirement.

For almost 30 years, AXOR's ongoing collaboration with Phillipe Starck has set the benchmark for sustainability through timeless, essentialist designs meant to last a lifetime.

Saving water is essential to AXOR

Water is one of our most precious resources. That's why, while continuing to offer water-saving products such as AXOR Conscious Showers, the AXOR product portfolio will be restructured over the coming years, placing even greater emphasis on water-efficiency. Why? Because reducing a product's water consumption also reduces the energy needed to heat that water, thus reducing carbon emissions.

AXOR plans to convert all water-consuming products to its "ECO" specifications by 2030, meaning the products will be available exclusively with water-saving technologies, all while offering the same exceptional functionality and performance.

Our water-saving Conscious Shower produces a generous water spray.

Collaboration lies at the heart of AXOR's Mission

AXOR strives to produce in a resource-friendly manner. Beyond developing all AXOR products exclusively in Europe—and manufacturing 90% of them at its AXOR Centre for Excellence in Germany's Black Forest—the brand maintains long-standing relationships with regional suppliers that prioritize sustainability. Furthermore, the company has developed specific eco-design guidelines for the future development of the entire product range.

Fair working conditions are central to AXOR's sustainability mission.

Making more from less: AXOR's Eco-Design Guidelines

Material management is an essential component of AXOR's sustainability strategy. Throughout the design, production and extended life of a product, AXOR implements a range of measures to promote a minimal environmental impact.

Closing the Cycle

Our products are completely separable by type, allowing exclusively recyclable components to be returned to the material cycle, either via customer recycling or product take-back with subsequent remanufacturing/recycling by Hansgrohe.

Less Material

AXOR aims to produce material-efficient products by using as little raw material as possible. Furthermore, AXOR strives to find sustainable, environmentally sound alternatives for widely used materials, which is why our products do not use inseparable composites or material mixes.

Less Complexity

Through innovative design, AXOR ensures its products consist of components and parts that can be used universally across the portfolio, which reduces complexity and costs.

Less Coating

AXOR products are durable even without coating. However, when coatings are necessary, they are applied using environmentally friendly surface technologies and the lowest possible amount of materials. To ensure the recyclability of components, coating thickness is kept as low as possible.

Staying Clean

The design of AXOR products and the choice of materials are intended to prevent dirt and lime deposits and to make effective cleaning possible without the use of aggressive, environmentally harmful cleaners.

Climate neutrality* since 2022

After successfully converting its plant in Schiltach, Germany, to green electricity, Hansgrohe did the same with all of its international production sites at the beginning of 2022. This reduces CO2 emissions by more than 26,000 tons annually. Subsequent energy efficiency analyses at Hansgrohe's production plants in France, China and Germany have identified further potential sustainability measures such as:

- combined heat and power plants and photovoltaics,
- peak load and solar irradiation planning

In its facility in Shanghai, AXOR has already begun to utilize heat pump technology on the heating system for the electroplating baths.

All international production plants have also set their own aspirational sustainability targets for water, waste and energy. As a result of these efforts, all Hansgrohe Group plants worldwide have been climate neutral* since 2022.

*Climate neutrality refers to greenhouse gas emissions from Scope 1 and 2 (direct emissions and energy consumed at the sites) according to the Greenhouse Gas Protocol. Wherever possible, the Hansgrohe Group actively reduces these emissions. The remaining emissions are offset through recognized, certified climate protection projects. For more information, please visit https://www.hansgrohe-group.com/en/about-us/sustainability.

UN Sustainability goals

Water is life, and water is our passion. We create inspiring moments while protecting this precious element. In doing so, we take responsibility for people and the environment. The Hansgrohe Group is committed to supporting five UN Sustainable Development Goals:

1. Good Health and Well-being
2. Clean water and sanitization
3. Decent work and economic growth
4. Responsible consumption and production
5. Climate action

Maximum services

AXOR FINISHPLUS AND AXOR SIGNATURE

With these customization services, AXOR answers customers' personal wishes and the demand for distinctive design. More at: axor-design.com

FIVE-YEAR MANUFACTURER'S GUARANTEE

The manufacturer's warranty extends beyond the legally required period and underlines AXOR's quality claim. In addition, strict quality management is already applied during the manufacturing process to ensure products meet the high requirements of independent testing institutes and legal regulations. Please note the warranty conditions at: axor-design.com/en/service/product-warranty

15 YEARS GUARANTEED AVAILABILITY

Fifteen years guaranteed availability for spare parts for AXOR products ensures a secure investment. All information and products is fast and easy to find online in the Spare Parts Shop: spares.hansgrohe.com

PROFESSIONAL WEBSITE

On the portal, specialist retailers, architects, and installers can find information, planning data, and prices for all products, as well as practical tips and tools for professional bathroom planning and advice. More at: pro.hansgrohe.com

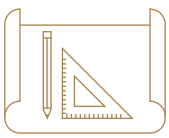

PLANNING DATA

Installation and service instructions, dimensional drawings, BIM planning data and 3D data for optimal bathroom planning with AXOR products can also be found in the professional portal: pro.hansgrohe.com

COMFORTZONE TEST

Create the perfect combinations of faucets and sinks in this internal test center. For this purpose, matching sinks from leading manufacturers are tested with AXOR products for optimal functionality and appearance. All recommended combinations can be found on the AXOR website on the respective collection page: axor-design.com

MEISTERSERVICE

AXOR service specialists are trained sanitation experts with advice on technical issues – by phone, email, or chat. In special cases, a specialist for building services can also be available on site. If required, local contacts are available by phone or e-mail: service@axor-design.com

PROJECT CONSULTATION

AXOR offers professional support and advice for project tenders and planning worldwide. If required, please contact your local contact partner or send an email to: service@axor-design.com

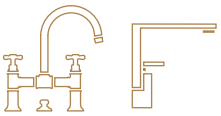

BATHROOM EXHIBITION

Experience AXOR live worldwide: The WaterStudios in architectural and design metropolises are sources of inspiration and meeting places, design and training centers for trade partners, architects, and interior designers. In the Aquademie at the brand's headquarters in Schiltach, Germany, visitors and trade partners can experience a bathroom and kitchen world over 1,000 square meters with a museum on the history of the bathroom, the company, and the brand, regular events, and a Showerworld for test showers.

ONLINE AQUADEMIE

You can access the newly developed Hansgrohe Online Aquademie via the trade partner website. Here, partners in the trade and crafts can benefit from detailed knowledge on the topics of products and sanitation technology, as well as from non-technical highlights.
More information at: aquademie-seminars.hansgrohe.com

Design icons and style diversity

From classic to modern: AXOR faucets, showers, washbasins, bathtubs and accessories. Unique, avant-garde pieces and complete collections. Created with world-renowned designers. Uncompromising in quality. Full of pioneering innovations. In pursuit of perfection.

AXOR One

AXOR Edge

AXOR MyEdition

AXOR Starck

AXOR Starck Organic

AXOR Citterio

AXOR Citterio E

AXOR Citterio M

AXOR Urquiola

AXOR Massaud

AXOR Uno

AXOR Montreux

AXOR Showers

AXOR Accessories

AXOR Electronic faucets

AXOR Wash basins and bathtubs

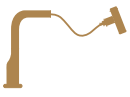

AXOR Kitchen faucets

AXOR Drain, wastes and overflows

AXOR Basic sets

Uncompromisingly innovative

Pioneering ideas. Shaping water into invigorating jets, enveloping cocoons and sensual flows. Intuitive systems. Simple to use, easy to clean and ecologically responsible. Promoting conscious and conscientious water use. The result of intensive research and development, AXOR technologies are made in Germany to the highest quality standards – our own. In pursuit of perfection.

AIRPOWER-TECHNOLOGY:

Enriching water with air produces plump droplets for a velvety touch on the skin.

POWDERRAIN-TECHNOLOGY:

The finest silicone nozzles, with several openings per nozzle, provide a uniquely fine mist of water.

QUICKCLEAN-TECHNOLOGY:

Remove limescale deposits quickly and easily with flexible silicone nozzles.

SELECT-TECHNOLOGY:

Use the Select button to switch spray modes or shower heads; turn the water on and off at the faucet.

ECO-SMART-TECHNOLOGY:

Faucets and showers that consume up to 60% less water than our conventional products.

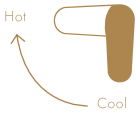

COOLSTART-TECHNOLOGY:

Cold water flows automatically when in the neutral handle position.

COMFORTZONE:

Defines the space between the wash basin and faucet. The larger the ComfortZone, the greater the variety of uses.

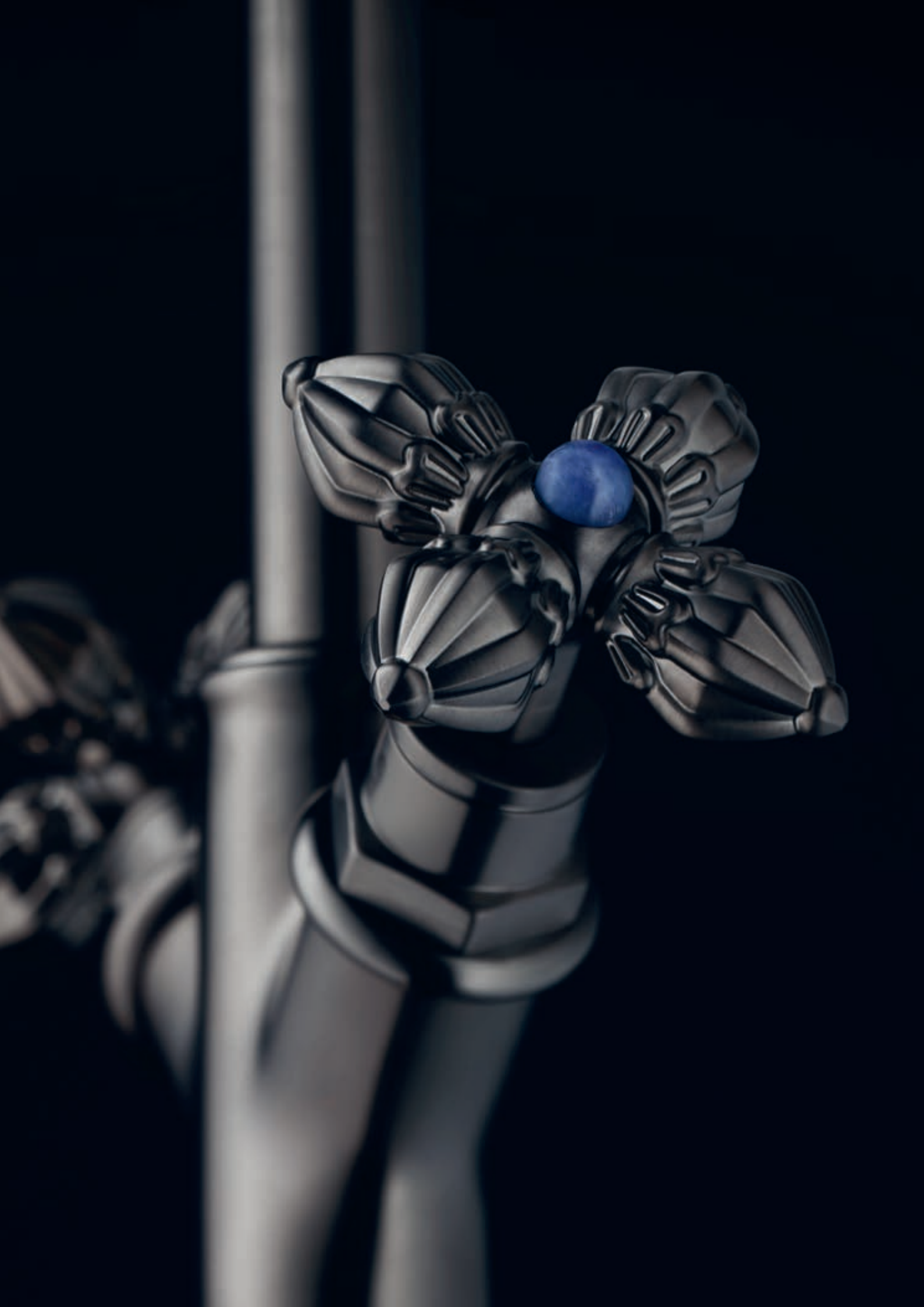

Individual expression in the bathroom

With collections in a variety of styles, AXOR responds to the desire for individualization in the bathroom. AXOR FinishPlus and AXOR Signature are two services for maximizing options for customers to express their personalities.

With the brushed or polished versions of colored AXOR FinishPlus surfaces, mixers, showers and accessories become design objects that perfectly complete an interior design and create an exclusive accent. The durable, high-quality surfaces are manufactured in a physical vapor deposition process (PVD).

THE TWO SERVICES HAVE ONE THING IN COMMON: THEY RESULT IN PRODUCTS THAT COMBINE INDIVIDUALITY AND QUALITY AT THE HIGHEST LEVEL.

The AXOR Signature service responds to customer requests for modifications such as inscriptions of the customer's signature, or inscriptions in the local language. The service can also provide extended shower connections to meet certain spatial requirements or to modify the mixer spout with respect to the unusual geometry of a wash basin. Experts with many years of experience and a love of detail address the modification requests, creating solutions in accordance with the most advanced industrial standards.

SPECIAL FEATURES OF THE INDIVIDUALIZATION SERVICES:

- Exclusively developed surfaces for AXOR FinishPlus, bring unique personality to the bathroom or kitchen
- through the use of color
- The extremely durable surfaces are created with the physical vapor deposition (PVD) process in the AXOR production facility in Schiltach, Germany
- The lacquered Matt Black and Matt White finishes offer customers maximum customization
- AXOR Signature service implements highly individualized customer requests: Lengthening, shortening, inscription
- All modifications are carried out by AXOR experts at the highest level of craftsmanship and in accordance with industrial standards

Learn more about AXOR FinishPlus and AXOR Signature:
axor-design.com

AXOR FinishPlus – Refinement of a special kind

Luxury is all about fulfilling personal dreams. AXOR FinishPlus surfaces are expressions of individuality at the highest level. They set new benchmarks for luster, robustness and durability. Whether as single items or in large quantities, they are manufactured at the highest technical level and stand for quality made in Germany.

- AXOR FinishPlus meets the increasing desire for individualization: The surfaces can be made to match the interior design perfectly.
- A standardized process guarantees consistent quality
- The Black Chrome and Red Gold surface finishes, developed by our own experts through intensive research work, underline the role of AXOR as an innovative leader in the area of surfaces
- A mixer with an AXOR FinishPlus surface, along with its spare parts, is available for purchase in an identical quality and design for 15 years
- In addition to the prespecified AXOR FinishPlus surfaces, other surfaces can be produced according to personal specifications by request through AXOR Signature

Learn more about AXOR FinishPlus:
axor-design.com

AXOR Finishes

Chrome
-000

AXOR FinishPlus PVD-surfaces

Brushed Brass
-950

Polished Gold Optic
-990

Brushed Gold Optic
-250

Brushed Bronze
-140

Polished Red Gold
-300

Brushed Red Gold
-310

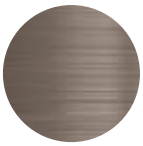

Brushed Nickel
-820

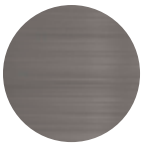

Stainless Steel Optic
-800

Polished Black Chrome
-330

Brushed Black Chrome
-340

AXOR FinishPlus lacquered surfaces

Matt Black
-670

Matt White
-700

The lacquered Matt Black and Matt White finishes are only available for a selected range of AXOR products.

The masterly combination of high-tech and craftsmanship

Electroplating

Chrome is the standard surface in the sanitary environment and has proven itself in the bathroom over many decades. Through the electrochemical deposition of various metals, and depending on the type of substrate, a copper layer is built up in the electroplating bath, followed by a bright nickel and chrome layer on the basic brass body.

PVD

The unmistakable character of the polished and brushed AXOR FinishPlus PVD-surfaces is the result of intensive development, refined in AXOR's in-house vacuum chambers using the physical vapor deposition (PVD) process. The PVD process gives the surfaces an additional metal layer. The vapor deposition of different process gas mixtures creates different light reflections on the surface. The result: exceptional color brilliance and high resistance. In order to reproduce a brushed surface, an additional work step is required in which the surface is tectured with a brushing fleece by hand.

Lacquer

The wet-lacquered AXOR FinishPlus surfaces, Matt Black and Matt White, offer a bold color that gives the product a silky, smooth feel and simple elegance.

- / The beneficial properties of PVD surfaces include resistance to scratching, cleaning agents and salty sea air
- / The special textures of the brushed versions are created by hand

Learn more about AXOR FinishPlus:
axor-design.com

AXOR Signature – from the special to the one-of-a-kind

Lengthening, shortening, inscription. AXOR Signature is an exclusive service that takes a design object and makes it one-of-a-kind, whether by providing each mixer with the customer's personal touch or by modifying it to fit specific dimensions. The personal and customized result manufactured by AXOR experts in Schiltach. With the utmost in care and precise craftsmanship in accordance with industrial standards.

AXOR SIGNATURE PROVIDES THE FOLLOWING SERVICES:

- Extensions, e.g., from wall to wash basin or bathtub, or from the ceiling into the room
- New developments
- Component mix
- Laser engraving, printing, and deep engraving to integrate initials, logos, or additional markings in the national language or another size, as well as special marking for functions
- Feasibility testing in advance of order acceptance with individualized delivery schedule and price

Learn more about AXOR Signature:
axor-design.com

Standardversion

EXAMPLE INSCRIPTIONS FOR OVERHEAD AND HAND SHOWERS

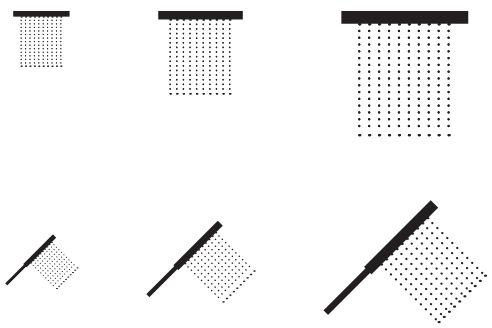

AXOR SIGNATURE FOR AN
INDIVIDUALIZED, PERFECT WHOLE.

CUSTOMIZED VERSION

Application of personalized inscriptions such as a monogram or icons to clearly identify users

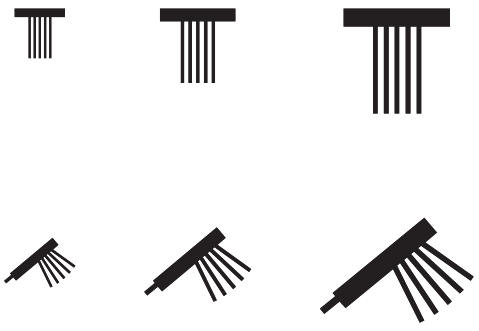

EXAMPLE FOR TEMPERATURE LABELS

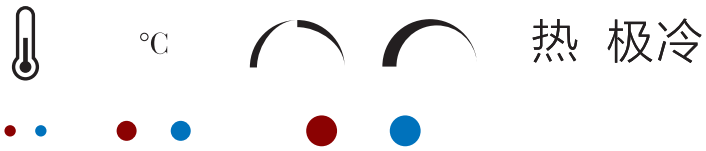

EXAMPLES FOR BRANDING

Lengthening of a ceiling connection – adapted for the height of the room

New development of a faucet handle from the AXOR Montreux collection for the Hotel Villa Copenhagen. In the suites designed by the jewelry company Shamballa Jewels, some of the AXOR faucets are specially equipped with Shamballa gemstone handles.

Length adjustments

Extending a faucet spout, adapted to the height of the sink

Redevelopment

Development of a product according to customer requirements.

Component mix

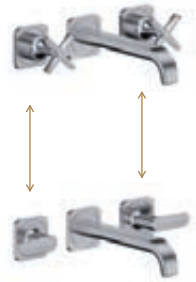

Combination of different design and product components.

A new dimension of individualization

With materials such as metal, glass, wood, marble and leather, AXOR Signature creates an entirely new feel for mixers. The cover plates are carefully selected by AXOR experts and designed to meet high benchmarks for mixer use. Each plate is a one-of-a-kind original.

- / Natural materials impart an especially sensual look and feel
- / Each product is unique, like the natural material itself

Exclusively for the AXOR MyEdition collection.
See page 118 or axor-design.com

METAL –
BRUSHED BRONZE

BLACK WALNUT

MARBLE NERO
MARQUINA

NAPPA LEATHER

Inspiration and Information

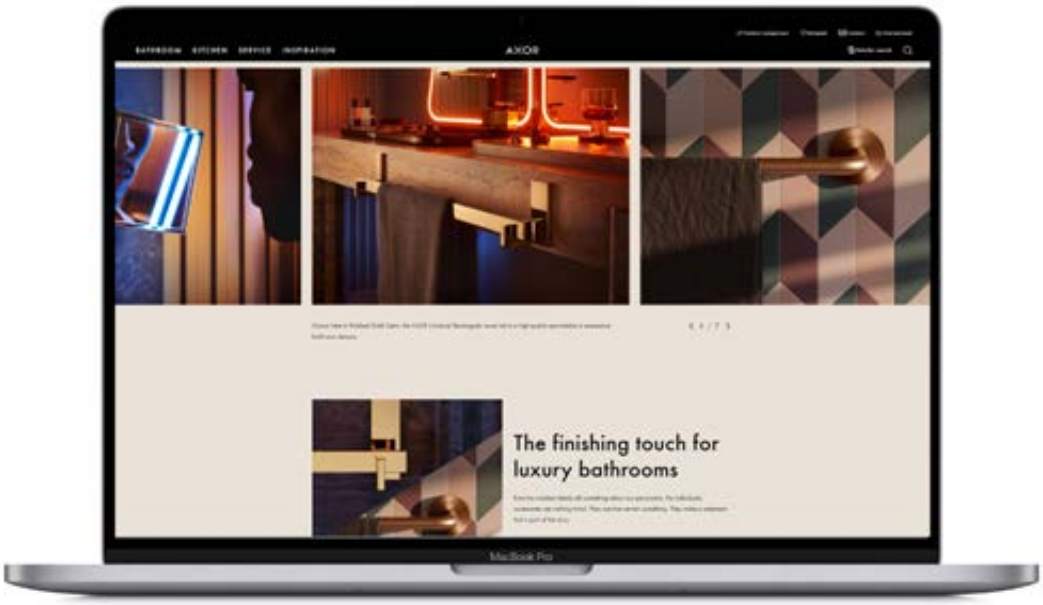

For AXOR, luxury means creating an experience of form and function. One that appeals to the senses and touches people. An experience that begins on the AXOR website. For impressions of and information about all products. For bathroom inspiration and planning. For individualization and refinement possibilities. For background about the brand, the design and the technology.

axor-design.com

AXOR Design
AXOR
axordesign
AXOR
axor.design

Collections

AXOR One 48

AXOR Edge 70

AXOR MyEdition 86

AXOR Starck 108

AXOR Citterio 120

AXOR Citterio E 138

AXOR Citterio M 156

AXOR Uno 168

AXOR Montreux 186

Code Numbers (HG = hansgrohe, AX = AXOR)

brand	Code no.	Ext. Nr.	page
01			
AX	01005180		363
AX	01006180		364
AX	01007180		364
AX	01700180		352
AX	01750180		352
10			
AX	10001000		115
AX	10003000		115
AX	10007000		115
AX	10101000	6150222	316
AX	10103000		115
AX	10106000	6150223	316
AX	10111000	6150224	114
AX	10117000		114
AX	10123000	6150171	114
AX	10129000	6150360	114
AX	10140000	6150227	316
AX	10145000	6150228	316
AX	10300000	6150272	116
AX	10303180	6150355	357
AX	10410000	6557006	117
AX	10452180	6350115	358
AX	10455000	6350731	116
AX	10455670		116
AX	10456000	6350732	116
AX	10531000	6559389	118
AX	10621800	6559011	220
AX	10623800	6559012	219
AX	10625800	6559013	220
AX	10627800	6559014	219
AX	10637000		219
AX	10650180	6555627	363
AX	10651000	6555628	270
AX	10750180	6350094	361
AX	10751000	6350095	268
AX	10754180	6350096	361
AX	10755000	6350097	268
AX	10921180		365
AX	10924000		230
AX	10925000		231
AX	10929000		230
AX	10932000	6350098	269
AX	10941180		367
AX	10942000		231
AX	10971180	6350099	362
AX	10972000	6350100	269
11			
AX	11300000	5617600	336
AX	11301000	5617601	337
AX	11302000	5617602	336
AX	11440000	5814100	337
AX	11626000	6551013	165
AX	11626670		165
12			
AX	12102000	6150773	114
AX	12171000	6150512	317
AX	12172000	6150513	317
AX	12173000	6150514	317
AX	12174000	6150515	317
AX	12423000		218
AX	12427000		218
AX	12571000		207
AX	12571670		207
AX	12572000		207
AX	12572670		207
AX	12573000		207
AX	12573670		207
AX	12592000		204
AX	12592670		204
AX	12593000		205
AX	12593670		205
AX	12594000		204
AX	12594670		204
AX	12595000		205
AX	12595670		205
AX	12596000		206
AX	12596670		206
AX	12626000	6559475	135
AX	12676180		368
AX	12922180		364
13			
AX	13586000		356
AX	13587000		353
AX	13594000		355
AX	13603000		365
AX	13609000		357
AX	13610000		354
AX	13610670		354
AX	13610700		354
AX	13611000		354
AX	13611670		354
AX	13611700		354
AX	13623180	6150516	356
AX	13625180	6150814	356
15			
AX	15490180		343
16			
AX	16180180	6150204	355
AX	16182180	6150521	355
AX	16320000	6555611	194
AX	16320820	6555612	194
AX	16325000	6555613	193
AX	16325820	6555614	193
AX	16513000	6150526	191
AX	16513820	6150527	191
AX	16514000	6150528	191
AX	16514820	6150529	191
AX	16515000	6150530	190
AX	16515820	6150531	190
AX	16516000		190
AX	16516820		190
AX	16532000	6150534	192
AX	16532820	6150535	192
AX	16534000	6150536	192
AX	16534820	6150537	192
AX	16535000	6150538	190
AX	16535820	6150539	190
AX	16536000	6150540	191
AX	16536820	6150541	191
AX	16541000	6557008	192
AX	16541820	6557009	192

brand	Code no.	Ext. Nr.	page
AX	16884000	6555309	193
AX	16884820	6555310	193
18			
AX	18310180		359
AX	18311180		359
AX	18312180		360
AX	18313180		360
AX	18355000		266
AX	18356000		266
AX	18357000		267
AX	18357300		267
AX	18358000		267
19			
AX	19418000	6559379	117
26			
AX	26021000		233
AX	26022000		233
AX	26023000		246
AX	26025000		243
AX	26031000		232
AX	26032000		232
AX	26034000		229
AX	26034820		229
AX	26035000		229
AX	26035820		229
AX	26050000	6559834	244
AX	26050670		244
AX	26051000		244
AX	26051670		244
AX	26431000		239
AX	26431670		239
AX	26431820		239
AX	26432000		238
AX	26432670		238
AX	26432820		238
AX	26433000		238
AX	26433670		238
AX	26433820		238
AX	26434180		366
AX	26436000		240
AX	26436670		240
AX	26437000		238
AX	26437670		238
AX	26438000		238
AX	26438670		238
AX	26909180		366
AX	26965000		238
AX	26965670		238
AX	26966000		238
AX	26966670		238
AX	26967000		240
AX	26967670		240
27			
AX	27348000		240
AX	27348820		240
AX	27451000	6551002	252
AX	27515000	6555704	251
AX	27830000		119
AX	27831000		136
AX	27980000	6559150	119
AX	27982000	6559354	195

brand	Code no.	Ext. Nr.	page
AX	27982820	6559355	195
AX	27983000	6559404	119
AX	27987000		248
AX	27989000		248
AX	27991000		136
28			
AX	28011000		344
AX	28012000		343
AX	28014000		344
AX	28022000		343
AX	28112000	6555311	259
AX	28112820	6555312	259
AX	28116000	6555313	259
AX	28116820	6555314	259
AX	28120000		259
AX	28120820		259
AX	28127000	6559835	258
AX	28128000	6559836	258
AX	28128820		258
AX	28227000		256
AX	28227140		256
AX	28227250		256
AX	28227300		256
AX	28227310		256
AX	28227330		256
AX	28227340		256
AX	28227670		256
AX	28227700		256
AX	28227800		256
AX	28227820		256
AX	28227950		256
AX	28227990		256
AX	28228000		257
AX	28228140		257
AX	28228250		257
AX	28228300		257
AX	28228310		257
AX	28228330		257
AX	28228340		257
AX	28228670		257
AX	28228700		257
AX	28228800		257
AX	28228820		257
AX	28228950		257
AX	28228990		257
AX	28259000		256
AX	28259140		256
AX	28259250		256
AX	28259300		256
AX	28259310		256
AX	28259330		256
AX	28259340		256
AX	28259670		256
AX	28259700		256
AX	28259800		256
AX	28259820		256
AX	28259950		256
AX	28259990		256
AX	28261000		257
AX	28261140		257
AX	28261250		257

Code Numbers (HG = hansgrohe, AX = AXOR)

brand	Code no.	Ext. Nr.	page
AX	28261300		257
AX	28261310		257
AX	28261330		257
AX	28261340		257
AX	28261670		257
AX	28261700		257
AX	28261800		257
AX	28261820		257
AX	28261950		257
AX	28261990		257
AX	28282000	6555306	68
AX	28282670	6550152	68
AX	28282700		68
AX	28284000	6555307	68
AX	28286000	6555308	68
AX	28286670		68
AX	28286700		68
AX	28290000		255
AX	28290140		255
AX	28290250		255
AX	28290300		255
AX	28290310		255
AX	28290330		255
AX	28290340		255
AX	28290670		255
AX	28290700		255
AX	28290800		255
AX	28290820		255
AX	28290950		255
AX	28290990		255
AX	28291000		256
AX	28291140		256
AX	28291250		256
AX	28291300		256
AX	28291310		256
AX	28291330		256
AX	28291340		256
AX	28291670		256
AX	28291700		256
AX	28291800		256
AX	28291820		256
AX	28291950		256
AX	28291990		256
AX	28464000		241
AX	28469000		242
AX	28474000		194
AX	28474820		194
AX	28486180	6559016	367
AX	28487000		194
AX	28487820		194
AX	28491000	6559017	241
AX	28494000	6559362	117
AX	28532000	6555615	118
AX	28532670		118
AX	28532700		118
AX	28532990		118
AX	28622000		68
AX	28622670		68
AX	28622820		258
AX	28624000		68
AX	28624670		68
AX	28624820		257
AX	28626000		68
AX	28626670		68
AX	28626820		258
34			
AX	34013000	6150786	162
AX	34018000	6150787	162
AX	34112000	6150242	162
AX	34113000	6150243	163
AX	34115000	6150244	162
AX	34116000	6150245	163
AX	34127000		162
AX	34133000	6150564	164
AX	34313000	6150565	164
AX	34315000	6150566	164
AX	34410000	6557013	165
35			
AX	35214000		240
AX	35214670		240
AX	35274000		228
AX	35275000		228
AX	35276000		227
AX	35277000		229
AX	35278000		228
AX	35279000		228
AX	35280000		228
AX	35281000		228
AX	35282000	6559837	227
AX	35283000		227
AX	35284000		223
AX	35286000		224
AX	35287000		224
AX	35288000		367
AX	35296000		223
AX	35297000		224
AX	35298000		224
AX	35300000		223
AX	35300670		223
AX	35301000		224
AX	35301670		224
AX	35302000		224
AX	35302670		224
AX	35303000		223
AX	35303670		223
AX	35304000		224
AX	35304670		224
AX	35305000		224
AX	35305670		224
AX	35306000		225
AX	35308000		226
AX	35309000		226
AX	35310000		225
AX	35312000		226
AX	35313000		226
AX	35314000		225
AX	35316000		226
AX	35317000		226
AX	35317330		226
AX	35318000		225
AX	35320000		226
AX	35321000		226

brand	Code no.	Ext. Nr.	page
AX	35361180		365
AX	35363180		366
AX	35373000		234
AX	35373670		234
AX	35374000		234
AX	35374670		234
AX	35380000		236
AX	35380670		236
AX	35381000		236
AX	35381670		236
AX	35382000		235
AX	35382670		235
AX	35383000		235
AX	35383670		235
AX	35387000		234
AX	35387670		234
AX	35388000		235
AX	35388670		235
AX	35389000		236
AX	35389670		236
36			
AX	36100000		146
AX	36100670		146
AX	36101000		146
AX	36101670		146
AX	36103000		146
AX	36104000		146
AX	36104670		146
AX	36106000		147
AX	36106670		147
AX	36107000	6150567	149
AX	36107670		149
AX	36108000	6150568	148
AX	36108670		148
AX	36110000		146
AX	36110670		146
AX	36111000		146
AX	36111670		146
AX	36113000	6150499	147
AX	36113670		147
AX	36114000		147
AX	36115000	6150569	149
AX	36116000	6150570	148
AX	36130000	6150497	149
AX	36130670		149
AX	36425000		150
AX	36425670		150
AX	36701180		362
AX	36702000		151
AX	36702670		151
AX	36703000		150
AX	36703670		150
AX	36704000		151
AX	36704670		151
AX	36708180		362
AX	36724000		153
AX	36724670		153
AX	36731000		252
AX	36731670		252
AX	36732000	6559838	252
AX	36733000		165

brand	Code no.	Ext. Nr.	page
AX	36733670		165
AX	36734000		165
AX	36734670		165
AX	36735000		154
AX	36736000		154
AX	36770180	6454176	363
AX	36771000		152
AX	36771670		152
AX	36772000		152
AX	36772670		152
AX	36822000		153
38			
AX	38010000	6150571	65
AX	38010250		65
AX	38010670	6150815	65
AX	38010700		65
AX	38010800		65
AX	38010820		182
AX	38010950		65
AX	38010990		65
AX	38023000	6150575	176
AX	38023820	6150576	176
AX	38026000	6150578	176
AX	38026820	6150579	176
AX	38032000	6150581	176
AX	38032820	6150582	176
AX	38034000	6150584	176
AX	38034820	6150585	176
AX	38036000	6150587	177
AX	38036820	6150588	177
AX	38037000	6150590	180
AX	38037820	6150591	180
AX	38038000	6150788	176
AX	38038820		176
AX	38054000	6150593	179
AX	38054820	6150594	179
AX	38112000	6150256	179
AX	38112820		179
AX	38113000	6150257	178
AX	38113820		178
AX	38115000		179
AX	38115820		179
AX	38116000	6150258	178
AX	38116820		178
AX	38119000	6150165	66
AX	38119670	6150816	66
AX	38119700		66
AX	38120000	6150166	66
AX	38120670	6150817	66
AX	38120700		66
AX	38121000	6150596	178
AX	38121820	6150597	178
AX	38122000	6150599	178
AX	38122820	6150600	178
AX	38411000		67
AX	38411670		67
AX	38411700		67
AX	38411820		185
AX	38412000		68
AX	38412670		68
AX	38412700		68

Code Numbers (HG = hansgrohe, AX = AXOR)

brand	Code no.	Ext. Nr.	page
AX	38412820		184
AX	38442000	6350823	183
AX	38442820	6350824	183
AX	38959000		369
AX	38960000		369
39			
AX	39001000	6150818	126
AX	39020000	6150263	127
AX	39021000	6150819	128
AX	39022000	6150820	126
AX	39023000	6150821	128
AX	39024000	6150822	128
AX	39031000	6150602	127
AX	39032000		127
AX	39071000	6150823	128
AX	39081000	6150824	128
AX	39112000	6150264	129
AX	39113000	6150265	130
AX	39115000	6150266	129
AX	39116000	6150267	130
AX	39117000	6150167	317
AX	39118000	6150168	317
AX	39119000	6150825	129
AX	39121000	6150826	130
AX	39133000	6150603	131
AX	39134000	6150604	131
AX	39135000	6150605	131
AX	39136000	6150606	131
AX	39143000	6150607	133
AX	39144000	6150608	132
AX	39147000	6150609	133
AX	39148000	6150610	132
AX	39151000	6150827	128
AX	39171000	6150828	129
AX	39181000	6150829	130
AX	39313000	6150612	133
AX	39314000		132
AX	39315000	6150613	133
AX	39410000	6557016	134
AX	39451000	6350838	134
AX	39525000	6555616	135
40			
AX	40872000	5773833	270
AX	40873000	5773834	270
AX	40877180	5773837	368
AX	40878180	5773838	368
42			
AX	42000000		334
AX	42000140		334
AX	42000340		334
AX	42000670		334
AX	42001000		334
AX	42001140		334
AX	42001340		334
AX	42001670		334
AX	42002000		335
AX	42002140		335
AX	42002340		335
AX	42002670		335
AX	42003000		335
AX	42003140		335

brand	Code no.	Ext. Nr.	page
AX	42003340		335
AX	42003670		335
AX	42004000		335
AX	42004140		335
AX	42004340		335
AX	42004670		335
AX	42005000		335
AX	42005140		335
AX	42005340		335
AX	42005670		335
AX	42006000		335
AX	42006140		335
AX	42006340		335
AX	42006670		335
AX	42019000		305
AX	42019820		305
AX	42020000		307
AX	42020820		307
AX	42021000		307
AX	42021820		307
AX	42028000		308
AX	42028820		308
AX	42030000		306
AX	42030820		306
AX	42033000		305
AX	42033820		305
AX	42035000		309
AX	42035820		309
AX	42036000		308
AX	42036820		308
AX	42060000		307
AX	42060820		307
AX	42065000		306
AX	42065820		306
AX	42066000		306
AX	42066820		306
AX	42080000		307
AX	42080820		307
AX	42090000		309
AX	42090820		309
AX	42134000		305
AX	42134820		305
AX	42137000		308
AX	42137820		308
AX	42300000	6150269	338
AX	42305000	6150271	337
AX	42436000	5773844	303
AX	42604000		286
AX	42604140		286
AX	42604340		286
AX	42604670		286
AX	42604820		286
AX	42604990		286
AX	42605000		286
AX	42605140		286
AX	42605340		286
AX	42605670		286
AX	42605820		286
AX	42605990		286
AX	42610000		286
AX	42610140		286

brand	Code no.	Ext. Nr.	page
AX	42610340		286
AX	42610670		286
AX	42610820		286
AX	42610990		286
AX	42611000		289
AX	42611140		289
AX	42611340		289
AX	42611670		289
AX	42611820		289
AX	42611990		289
AX	42613000		287
AX	42613140		287
AX	42613340		287
AX	42613670		287
AX	42613820		287
AX	42613990		287
AX	42622000		288
AX	42622140		288
AX	42622340		288
AX	42622670		288
AX	42622820		288
AX	42622990		288
AX	42623000		289
AX	42623140		289
AX	42623340		289
AX	42623670		289
AX	42623820		289
AX	42623990		289
AX	42626000		288
AX	42626140		288
AX	42626340		288
AX	42626670		288
AX	42626820		288
AX	42626990		288
AX	42639000		287
AX	42639140		287
AX	42639340		287
AX	42639670		287
AX	42639820		287
AX	42639990		287
AX	42644000		289
AX	42644140		289
AX	42644340		289
AX	42644670		289
AX	42644820		289
AX	42644990		289
AX	42649000		291
AX	42649140		291
AX	42649340		291
AX	42649670		291
AX	42649820		291
AX	42649990		291
AX	42654000		290
AX	42654140		290
AX	42654340		290
AX	42654670		290
AX	42654820		290
AX	42654990		290
AX	42655000		291
AX	42655140		291
AX	42655340		291

brand	Code no.	Ext. Nr.	page
AX	42655670		291
AX	42655820		291
AX	42655990		291
AX	42656000		290
AX	42656140		290
AX	42656340		290
AX	42656670		290
AX	42656820		290
AX	42656990		290
AX	42657000		290
AX	42657140		290
AX	42657340		290
AX	42657670		290
AX	42657820		290
AX	42657990		290
AX	42661000		288
AX	42661140		288
AX	42661340		288
AX	42661670		288
AX	42661820		288
AX	42661990		288
AX	42683000		288
AX	42683140		288
AX	42683340		288
AX	42683670		288
AX	42683820		288
AX	42683990		288
AX	42801000		302
AX	42801670		302
AX	42802000		300
AX	42803000		299
AX	42803670		299
AX	42804000		292
AX	42804670		292
AX	42804700		292
AX	42805000		292
AX	42805670		292
AX	42805700		292
AX	42810000		292
AX	42810670		292
AX	42810700		292
AX	42811000		295
AX	42811670		295
AX	42811700		295
AX	42812000		295
AX	42812670		295
AX	42812700		295
AX	42813000		293
AX	42813670		293
AX	42813700		293
AX	42819000		299
AX	42819670		299
AX	42821000		302
AX	42821670		302
AX	42822000		294
AX	42822670		294
AX	42822700		294
AX	42823000		294
AX	42823670		294
AX	42823700		294
AX	42826000		294

Code Numbers (HG = hansgrohe, AX = AXOR)

brand	Code no.	Ext. Nr.	page
AX	42826670		294
AX	42826700		294
AX	42830000		300
AX	42830670		300
AX	42832000		301
AX	42832350		301
AX	42832670		301
AX	42833000		301
AX	42833670		301
AX	42834000		299
AX	42834670		299
AX	42835000		303
AX	42835670		303
AX	42836000		303
AX	42836670		303
AX	42837000		301
AX	42837670		301
AX	42838000		300
AX	42840000		300
AX	42840670		300
AX	42841000		304
AX	42842000		302
AX	42843000		295
AX	42843670		295
AX	42843700		295
AX	42844000		296
AX	42844670		296
AX	42844700		296
AX	42846000		303
AX	42846670		303
AX	42848000		298
AX	42848670		298
AX	42848700		298
AX	42849000		298
AX	42849670		298
AX	42849700		298
AX	42855000		297
AX	42855670		297
AX	42855700		297
AX	42856000		296
AX	42856670		296
AX	42856700		296
AX	42857000		296
AX	42857670		296
AX	42857700		296
AX	42858000		296
AX	42858670		296
AX	42858700		296
AX	42860000		293
AX	42860670		293
AX	42860700		293
AX	42870000		304
AX	42870670		304
AX	42871000		304
AX	42871670		304
AX	42872000		297
AX	42872670		297
AX	42872700		297
AX	42873000		297
AX	42873670		297
AX	42873700		297

brand	Code no.	Ext. Nr.	page
AX	42880000		293
AX	42880670		293
AX	42880700		293
45			
AX	45001000	6150614	174
AX	45001820	6150615	174
AX	45002000	6150617	174
AX	45002820	6150618	174
AX	45003000	6150620	174
AX	45003820	6150621	174
AX	45004000	6150623	174
AX	45004820	6150624	174
AX	45010000	6150629	175
AX	45010820	6150630	175
AX	45012000	6150632	175
AX	45012820	6150633	175
AX	45013000	6150635	175
AX	45013820	6150636	175
AX	45014000	6150638	175
AX	45014820	6150639	175
AX	45015000	6150641	175
AX	45015820	6150642	175
AX	45037000	6150647	180
AX	45037820	6150648	180
AX	45110000	6150650	181
AX	45111000	6150651	181
AX	45112000	6150652	177
AX	45112820	6150653	177
AX	45113000	6150655	177
AX	45113820	6150656	177
AX	45133000	6150658	180
AX	45133820	6150659	180
AX	45410000		67
AX	45410820		185
AX	45412000		68
AX	45412820		184
AX	45416000	6350847	183
AX	45416820	6350848	183
AX	45442180		358
AX	45443180		359
AX	45720000		63
AX	45720670		63
AX	45720700		63
AX	45721000		252
AX	45722000		246
AX	45723000		64
AX	45723670		64
AX	45723700		64
46			
AX	46010000		80
AX	46010300		80
AX	46010330		80
AX	46010990		80
AX	46011000		80
AX	46011300		80
AX	46011330		80
AX	46011990		80
AX	46030000		80
AX	46030300		80
AX	46030330		80
AX	46030990		80

brand	Code no.	Ext. Nr.	page
AX	46031000		81
AX	46031300		81
AX	46031330		81
AX	46031990		81
AX	46050000		81
AX	46051000		81
AX	46060000		82
AX	46060300		82
AX	46060330		82
AX	46060990		82
AX	46061000		82
AX	46061300		82
AX	46061330		82
AX	46061990		82
AX	46140000		84
AX	46141000		84
AX	46240000		83
AX	46241000		83
AX	46410000		82
AX	46411000		82
AX	46520000		83
AX	46521000		83
AX	46700000		84
AX	46701000		84
AX	46710000		84
AX	46711000		85
AX	46720000		85
AX	46721000		85
AX	46730000		85
AX	46731000		85
47			
AX	47010000		94
AX	47010600		94
AX	47010670		94
AX	47012000		95
AX	47012140		95
AX	47012250		95
AX	47012300		95
AX	47012310		95
AX	47012330		95
AX	47012340		95
AX	47012670		95
AX	47012800		95
AX	47012950		95
AX	47012990		95
AX	47020000		95
AX	47020600		95
AX	47020670		95
AX	47022000		95
AX	47022140		95
AX	47022250		95
AX	47022300		95
AX	47022310		95
AX	47022330		95
AX	47022340		95
AX	47022670		95
AX	47022800		95
AX	47022950		95
AX	47022990		95
AX	47030000		95
AX	47030600		95

brand	Code no.	Ext. Nr.	page
AX	47030670		95
AX	47032000		95
AX	47032670		95
AX	47040000		98
AX	47040600		98
AX	47040670		98
AX	47042000		98
AX	47042140		98
AX	47042250		98
AX	47042300		98
AX	47042310		98
AX	47042330		98
AX	47042340		98
AX	47042670		98
AX	47042800		98
AX	47042950		98
AX	47042990		98
AX	47050000		97
AX	47050600		97
AX	47050670		97
AX	47052000		97
AX	47052140		97
AX	47052250		97
AX	47052300		97
AX	47052310		97
AX	47052330		97
AX	47052340		97
AX	47052670		97
AX	47052800		97
AX	47060000		96
AX	47060600		96
AX	47060670		96
AX	47062000		96
AX	47062140		96
AX	47062250		96
AX	47062300		96
AX	47062310		96
AX	47062330		96
AX	47062340		96
AX	47062670		96
AX	47062800		96
AX	47062950		96
AX	47062990		96
AX	47070000		97
AX	47070600		97
AX	47070670		97
AX	47072000		97
AX	47072670		97
AX	47410000		100
AX	47410600		100
AX	47410670		100
AX	47412000		100
AX	47412140		100
AX	47412340		100
AX	47412670		100
AX	47440000		99
AX	47440600		99
AX	47440670		99
AX	47442000		99
AX	47442140		99
AX	47442340		99

Code Numbers (HG = hansgrohe, AX = AXOR)

brand	Code no.	Ext. Nr.	page
AX	47442670		99
AX	47900000		102
AX	47900600		102
AX	47901000		102
AX	47901600		102
AX	47902000		102
AX	47902600		102
AX	47903000		101
AX	47903140		101
AX	47903340		101
AX	47903670		101
AX	47904000		101
AX	47904140		101
AX	47904340		101
AX	47904670		101
AX	47905000		101
AX	47905140		101
AX	47905340		101
AX	47905670		101
AX	47906000		102
AX	47907000		102
AX	47908000		102
AX	47909000		103
AX	47910000		103
AX	47911000		103
AX	47913000		103
AX	47914000		103
AX	47915000		103
AX	47916000		104
AX	47917000		104
AX	47918000		104
AX	47921000		105
AX	47922000		105
AX	47923000		105
AX	47924000		106
AX	47925000		106
AX	47926000		106
48			
AX	48000000	6150830	57
AX	48000670	6150831	57
AX	48000700		57
AX	48001000	6150832	57
AX	48001670	6150833	57
AX	48001700		57
AX	48002000	6150834	57
AX	48002670	6150835	57
AX	48002700		57
AX	48010000	6150836	54
AX	48010670	6150837	54
AX	48010700		54
AX	48020000	6150838	54
AX	48020670	6150839	54
AX	48020700		54
AX	48030000	6150840	54
AX	48030670	6150841	54
AX	48030700		54
AX	48060000	6150842	55
AX	48060670	6150843	55
AX	48060700		55
AX	48070000	6150844	55
AX	48070670	6150845	55

brand	Code no.	Ext. Nr.	page
AX	48070700		55
AX	48112000	6150846	56
AX	48112670	6150847	56
AX	48112700		56
AX	48120000	6150848	58
AX	48120670	6150849	58
AX	48120700		58
AX	48210000		58
AX	48210670		58
AX	48210700		58
AX	48490000		60
AX	48490670		60
AX	48490700		60
AX	48491000		61
AX	48491670		61
AX	48491700		61
AX	48492000		61
AX	48492670		61
AX	48492700		61
AX	48493000		62
AX	48493670		62
AX	48493700		62
AX	48494000		62
AX	48494670		62
AX	48494700		62
AX	48495000		239
AX	48495670		239
AX	48495700		239
AX	48496000		239
AX	48496670		239
AX	48496700		239
AX	48651000	6550153	63
AX	48651670	6550154	63
AX	48651700		63
AX	48791000		59
AX	48791670		59
AX	48791700		59
AX	48792000		60
AX	48792670		60
AX	48792700		60
AX	48798180		59
51			
AX	51300000		345
AX	51300670		345
AX	51300700		345
AX	51300820		345
AX	51301000		346
AX	51301670		346
AX	51301700		346
AX	51302000		345
AX	51303000		346
AX	51303820		346
AX	51305000		69
AX	51305670		69
AX	51305700		69
AX	51305820		346
AX	51306000		69
AX	51306670		69
AX	51306700		69
58			
AX	58307000		342

brand	Code no.	Ext. Nr.	page
AX	58307670		342
AX	58307700		342
AX	58308000		342
AX	58316000		344
AX	58316140		344
AX	58316340		344
AX	58316670		344
AX	58316700		344
AX	58316820		344
AX	58316990		344
AX	58317000		342
AX	58317670		342
AX	58317700		342
AX	58318000		345
AX	58318140		345
AX	58318340		345
AX	58318670		345
AX	58318700		345
AX	58318820		345
AX	58318990		345
93			
AX	93171000		354
AX	93307000		267
AX	93308000		267
AX	93310000		267
AX	93311000		268
AX	93312000		268
HG	93500000	6550165	352
AX	93663000		267
96			
AX	96259000		357
AX	96383000	6150354	358
AX	96441000	6350114	358
97			
AX	97407000	6350477	353
98			
AX	98860000	6350479	353

AXOR One

Basin	54
Bidet	58
Shower sets	59
Overhead showers	60
Hand showers	63
Porter	64

AXOR ONE

The essence of simplicity

A bathroom collection so elegant, elemental and pure, it could be realized only through radical innovation. Whether at the wash basin, bathtub or shower, familiar archetypes have been reinvented for greater clarity, enhanced function and superior control. Timeless by design, and available in Chrome, Matt Black, Matt White and an array of exclusive AXOR FinishPlus surfaces, AXOR One brings exquisite beauty to any bathroom.

Design: Barber Osgerby

"AXOR ONE PROVOKES THE MEMORY OF WATER BUT HERALDS A NEW WAY OF CONTROLLING IT THAT IS MUCH MORE PRECISE AND INCREDIBLY REFINED."

Edward Barber and Jay Osgerby

CHARACTERISTIC DESIGN FEATURE:
Minimalist design: A familiar archetype with new, innovative interaction.

THE DESIGNER'S IDEA:
Challenging the archetype through the pursuit of art and science, invention and interaction.

SPECIAL COLLECTION HIGHLIGHTS:

- Holistic design language of slender silhouettes, flat surfaces, soft corners and balanced proportions
- Using Select technology: The mechanical faucet handles enable precise, water-saving on/off and temperature control
- A collection of elegant archetypes for the wash basin, bathtub and shower
- The action is effortless, intuitive and ultra-precise, and this same inventive design thinking characterizes the entire collection
- Maximum individualization: The exclusive lacquered surface finishes Matt Black and Matt White

Learn more about AXOR One:
axor-design.com

The Essence of Simplicity with new Interaction

A collection of elegant archetypes for the wash basin, bathtub and shower, AXOR One is unified by a holistic design language of slender silhouettes, flat surfaces, soft corners and balanced proportions. The iconic mixers feature a gentle taper to their curved spouts, a subtle detail that signals exceptional quality of design and manufacturing. Utilizing Select technology, the mechanical mixer handles enable precise, water-saving on/off and temperate control. Positioning the cartridge underneath the wash basin makes the exceptionally slim silhouette possible. At the same time, it allows for fast and easy installation as well as easy service and maintenance: Only the waterpipe needs to be removed, while the cartridge can be easily released thanks to a bayonet clasp.

FAMILIAR ARCHETYPE
With its archetypal round arch, the product looks familiar but is enhanced through innovation

GENTLE TAPERED SPOUT
A subtle detail that signals both precision and exceptional quality of design and manufacturing

BAYONET CLASP
Easy and fast installation of cartridge underneath the wash basin

MATT BLACK
Lacquered surface finish Matt Black

MINIMALIST DESIGN
Reduced to the minimum, the product is simple in form and function

SELECT TECHNOLOGY
WITH COOLSTART FUNCTION
The mechanical Select handle enables effortless, intuitive and ultra-precise control and includes a preset CoolStart function

WATERPIPE CONNECTION
Ensures water flow from cartridge to mixer above the wash basin

ON/OFF:
Press down on its all-in-one controller – the Select handle –to start or stop the water.

TEMPERATURE CONTROL:
Swivel clockwise to increase the temperature. The handle includes a preset CoolStart function, an environmentally friendly technology that helps conserve resources.

For matching products please refer to the AXOR Program chapters

AXOR Showers P. 208
AXOR Accessories P. 272
AXOR Basins & bathtubs P. 322
AXOR Electronic P. 312

NEW INTERPRETATION OF A 3-HOLE BASIN MIXER
The soft designed handles are very gentle to the touch. By pushing the right handle, with its integrated Select technology, you can start and stop the water flow. By turning the right handle, you can change the temperature. By turning the left handle, you can adjust the water flow. This control logic allows for pre-settings for temperature and volume.

The minimalist design story continues with the wash basin mixers with lever handle. The new M25XS cartridge allows for a new flat handle design. The integrated aerator and the slightly tapered spout emphasizes the quality of design and manufacturing.

Basin mixers Select

Features of all variants

/ consists of: Basin mixer, waste set
/ handle variant: Select
/ spray type: normal spray
/ maximum flow rate at 3 bar: 5 l/min
/ Select cartridge with temperature control
/ temperature limitation adjustable
/ suitable for continuous flow water heaters
/ push-open waste set G 1¼
/ material waste set: metal
/ connection type: G ⅜ connections
/ connection dimension: DN15
/ cold water in basic handle position
/ EU taxonomy: max. 6 l/min - Substantial Contribution (SC) possible

140

170

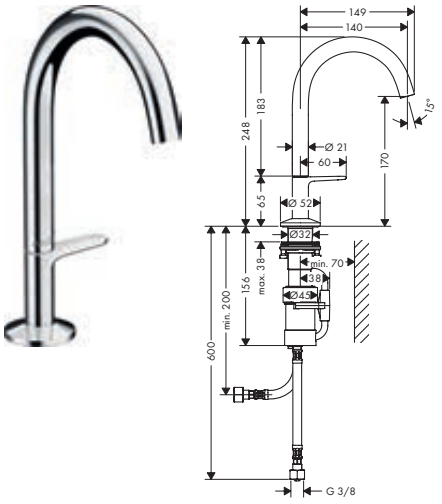

260

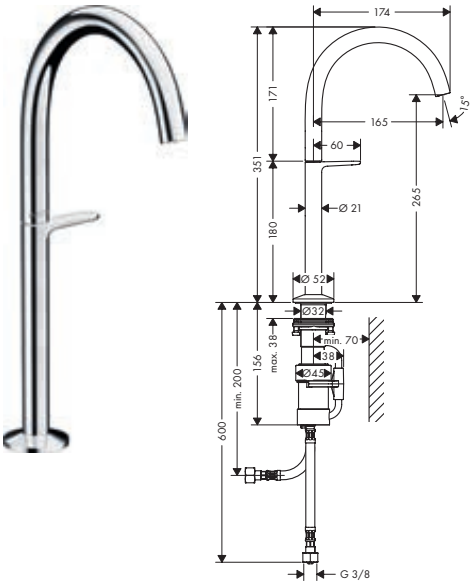

Sustainability

EcoSmart | CoolStart

Technologies

Select | AirPower | Comfort Zone

Overview variants

ComfortZone	Projection (mm)	Spout height (mm)	For wash bowls	Finish	LVI-nro	Code no.
140	122	140	–	Chrome	6150836	48010000
				Matt Black	6150837	48010670
				Matt White		48010700
				AXOR FinishPlus*		48010XXX
170	140	170	–	Chrome	6150838	48020000
				Matt Black	6150839	48020670
				Matt White		48020700
				AXOR FinishPlus*		48020XXX
260	165	265	■	Chrome	6150840	48030000
				Matt Black	6150841	48030670
				Matt White		48030700
				AXOR FinishPlus*		48030XXX

Measurements within scale drawings are in mm.
Technical specifications and units of measure are subject to change.

2-hole basin mixer Select 260 with push-open waste set

Features

/ consists of: 2-hole basin mixer, waste set
/ ComfortZone 260
/ projection: 165 mm
/ spout height: 267 mm
/ handle variant: Select
/ swivel range 120°
/ spray type: normal spray
/ maximum flow rate at 3 bar: 5 l/min
/ Select cartridge with temperature control
/ temperature limitation adjustable
/ suitable for continuous flow water heaters
/ push-open waste set G 1¼
/ material waste set: metal
/ connection type: G ⅜
/ flexible arrangement of control unit and spout possible
/ the control unit needs approx. 20 cm space underneath the top
/ EU taxonomy: max. 6 l/min - Substantial Contribution (SC) possible

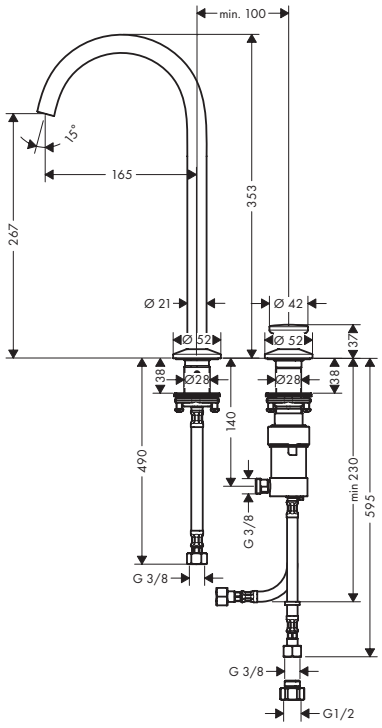

Sustainability

EcoSmart

Technologies

Select · AirPower · Comfort Zone

Finish	LVI-nro	Code no.
Chrome	6150842	48060000
Matt Black	6150843	48060670
Matt White		48060700
AXOR FinishPlus*		48060XXX

3-hole basin mixer Select 170 with push-open waste set

Features

/ consists of: 3-hole basin mixer, waste set
/ ComfortZone 170
/ projection: 140 mm
/ spout height: 169 mm
/ handle variant: Select
/ spray type: normal spray
/ maximum flow rate at 3 bar: 5 l/min
/ right handle: Select cartridge with temperature control
/ left handle: volume control
/ temperature limitation adjustable
/ suitable for continuous flow water heaters
/ push-open waste set G 1¼
/ material waste set: metal
/ connection type: G ⅜ connections
/ connection dimension: DN15
/ EU taxonomy: max. 6 l/min - Substantial Contribution (SC) possible

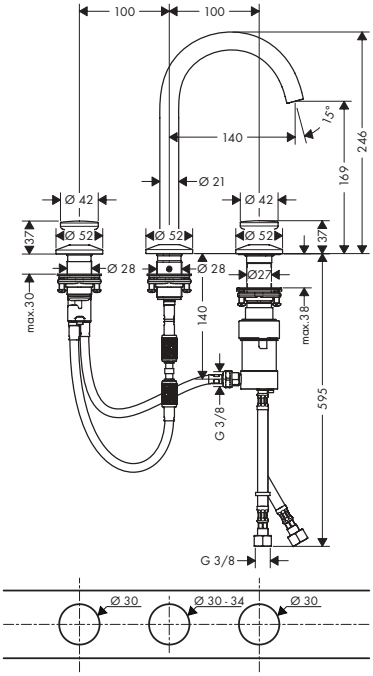

Sustainability

EcoSmart

Technologies

Select · AirPower · Comfort Zone

Finish	LVI-nro	Code no.
Chrome	6150844	48070000
Matt Black	6150845	48070670
Matt White		48070700
AXOR FinishPlus*		48070XXX

*AXOR FinishPlus: For further AXOR FinishPlus surfaces please see the AXOR FinishPlus overview on page 27.

Basin mixer for concealed installation wall-mounted Select with spout 220 mm

Features

/ consists of: basin mixer for concealed installation wall-mounted, waste set
/ projection: 220 mm
/ handle variant: Select
/ spray type: normal spray
/ maximum flow rate at 3 bar: 5 l/min
/ Select cartridge with temperature control
/ suitable for continuous flow water heaters
/ non-closing waste set
/ connection type: basic set
/ connection dimension: DN15
/ EU taxonomy: max. 6 l/min - Substantial Contribution (SC) possible

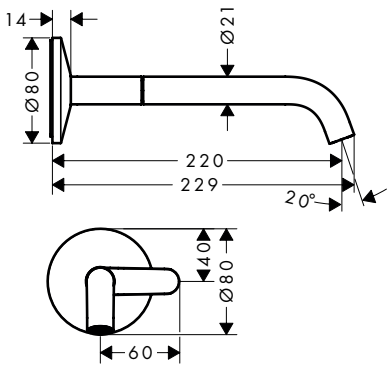

Sustainability

Technologies

Finish	LVI-nro	Code no.
Chrome	6150846	48112000
Matt Black	6150847	48112670
Matt White		48112700
AXOR FinishPlus*		48112XXX

Required parts: Code no.

Basic set for basin mixer for concealed installation wall-mounted Select 13625180

Measurements within scale drawings are in mm.
Technical specifications and units of measure are subject to change.

Single lever basin mixers

Features of all variants

/ consists of: single lever basin mixer, waste set
/ handle variant: lever handle
/ spray type: normal spray
/ maximum flow rate at 3 bar: 5 l/min
/ ceramic cartridge
/ temperature limitation adjustable
/ suitable for continuous flow water heaters
/ material waste set: metal
/ connection type: G ⅜ connections
/ connection dimension: DN15
/ EU taxonomy: max. 6 l/min - Substantial Contribution (SC) possible

70

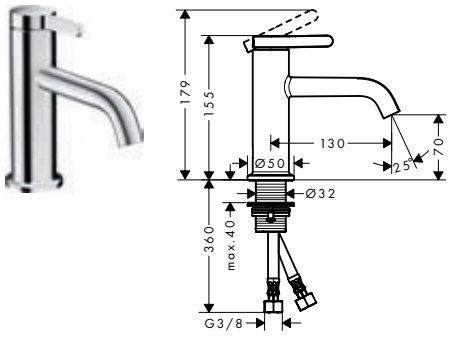

260

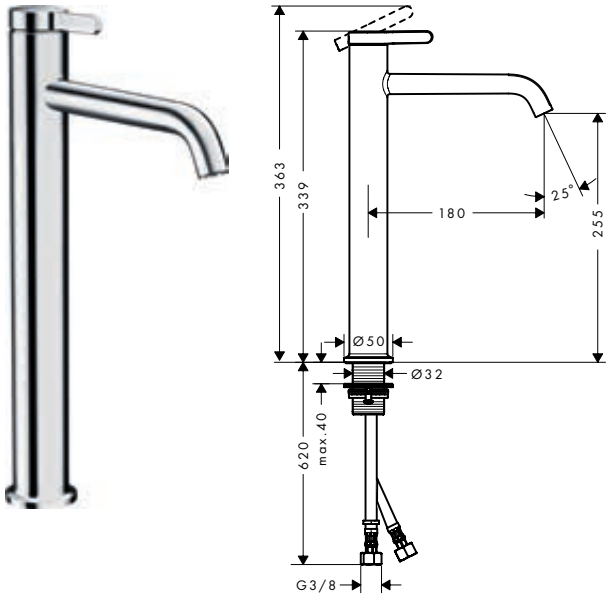

Sustainability

Technologies

Overview variants

ComfortZone	Projection (mm)	Spout height (mm)	Waste set	For wash bowls	Finish	LVI-nro	Code no.
70	130	70	pop-up	–	Chrome	6150830	48000000
					Matt Black	6150831	48000670
					Matt White		48000700
					AXOR FinishPlus*		48000XXX
70	130	70	non-closing	–	Chrome	6150832	48001000
					Matt Black	6150833	48001670
					Matt White		48001700
					AXOR FinishPlus*		48001XXX
260	180	255	non-closing	■	Chrome	6150834	48002000
					Matt Black	6150835	48002670
					Matt White		48002700
					AXOR FinishPlus*		48002XXX

*AXOR FinishPlus: For further AXOR FinishPlus surfaces please see the AXOR FinishPlus overview on page 27.

Single lever basin mixer for concealed installation wall-mounted with lever handle and spout 220 mm

Features

/ consists of: single lever basin mixer for concealed installation wall-mounted, waste set
/ projection: 220 mm
/ handle variant: lever handle
/ spray type: normal spray
/ maximum flow rate at 3 bar: 5 l/min
/ ceramic cartridge
/ temperature limitation adjustable
/ suitable for continuous flow water heaters
/ non-closing waste set
/ connection type: basic set
/ connection dimension: DN15
/ handle can be positioned on the right or left, depending on the basic set installation
/ EU taxonomy: max. 6 l/min - Substantial Contribution (SC) possible

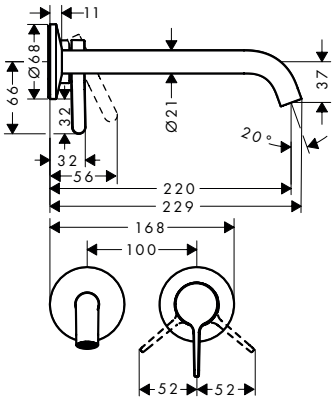

Sustainability

EcoSmart

Technologies

AirPower

Finish	LVI-nro	Code no.
Chrome	6150848	48120000
Matt Black	6150849	48120670
Matt White		48120700
AXOR FinishPlus*		48120XXX

Required parts:	Code no.
Basic set for single lever basin mixer for concealed installation wall-mounted	13623180

Single lever bidet mixer with pop-up waste set

Features

/ consists of: single lever bidet mixer, waste set
/ projection: 113 mm
/ spout height: 100 mm
/ aerator with ball pivot
/ spray type: normal spray
/ maximum flow rate at 3 bar: 5 l/min
/ ceramic cartridge
/ temperature limitation adjustable
/ suitable for continous flow water heaters
/ pop-up waste set G 1¼
/ material waste set: metal
/ connection type: G ⅜ connections
/ connection dimension: DN15
/ EU taxonomy: max. 6 l/min - Substantial Contribution (SC) possible

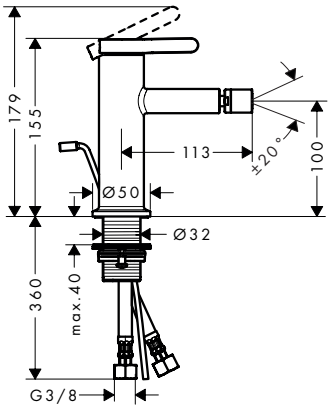

Sustainability

EcoSmart

Technologies

AirPower

Finish	Code no.
Chrome	48210000
Matt Black	48210670
Matt White	48210700
AXOR FinishPlus*	48210XXX

Measurements within scale drawings are in mm.
Technical specifications and units of measure are subject to change.

Basic set for Showerpipe

Features

/ suitable for AXOR One Showerpipe 48790XXX
/ connection dimension: G ½
/ sound-decoupled installation
/ minimum mounting depth: 46 mm
/ maximum mounting depth: 74 mm

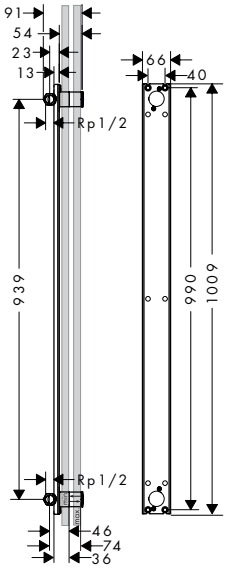

	Code no.
	48798180

Shower set 75 1jet EcoSmart with wall connection

Features

/ consists of: hand shower, shower bar, shower hose, slider, wall connector
/ shower head size: 73 mm
/ spray type: PowderRain
/ maximum flow rate at 3 bar: 9,1 l/min
/ minimum flow pressure: 0,8 bar
/ operating pressure: min. 1.5 bar/max. 6 bar
/ metal hand shower holder
/ wall mounting: screw fastening
/ wall supports of metal
/ profile pipe: round
/ shower bar diameter: 25 mm
/ drilling distance 929 mm
/ shower hose with conical nut on both ends
/ pivot connector prevents hose from tangling

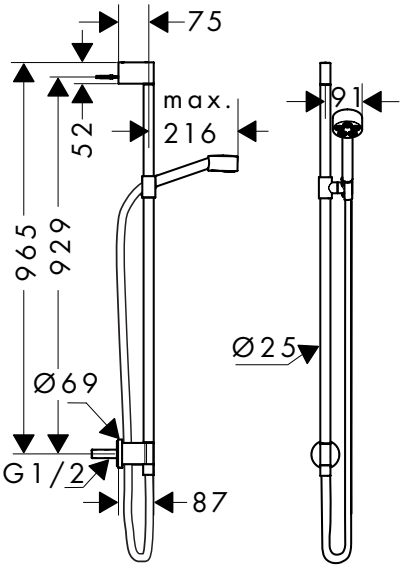

Sustainability

EcoSmart

Technologies

Quick Clean

Spray types

Powder Rain

Finish	Code no.
Chrome	48791000
Matt Black	48791670
Matt White	48791700
AXOR FinishPlus*	48791XXX

*AXOR FinishPlus: For further AXOR FinishPlus surfaces please see the AXOR FinishPlus overview on page 27.

Shower bar 0,90 m with wall connection and shower hose 1.60 m

Features

/ consists of: shower bar, slider, wall connector, shower hose
/ pivot connector prevents hose from tangling
/ hose nut: for shower hoses with a conical nut
/ pipe length: 965 mm
/ shower bar diameter: 25 mm
/ profile pipe: round
/ drilling distance: 929 mm
/ metal hand shower holder
/ slider steplessly adjustable
/ wall supports of metal

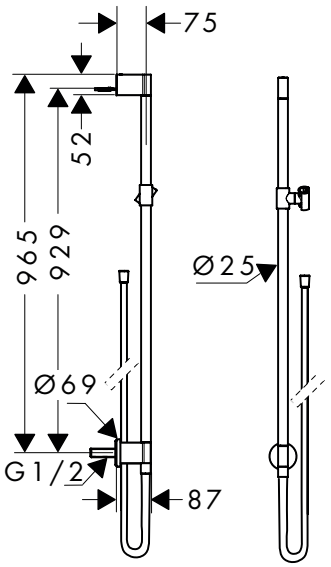

Finish	Code no.
Chrome	48792000
Matt Black	48792670
Matt White	48792700
AXOR FinishPlus*	48792XXX

Overhead shower 75 1jet EcoSmart with shower arm

Features

/ consists of: overhead shower, shower arm
/ shower head size: 73 mm
/ spray type: PowderRain
/ projection 116 mm
/ ball-joint: overhead shower angle adjustable
/ material spray disc: metal
/ shower arm length 85 mm
/ maximum flow rate at 3 bar: 8,7 l/min
/ flow rate PowderRain spray (at 3 bar): 8,7 l/min
/ function from: 6,3 l/min
/ minimum flow pressure: 1 bar
/ overhead shower removable for cleaning
/ installation: wall
/ connection thread G ½
/ connection dimension: DN15
/ suitable for continous flow water heaters

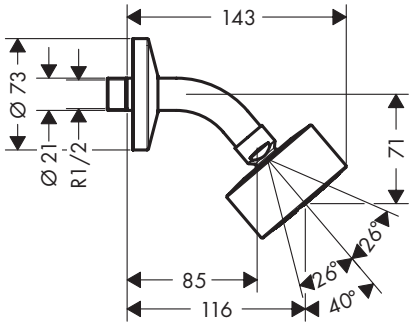

Sustainability

Technologies

Spray types

Finish	Code no.
Chrome	48490000
Matt Black	48490670
Matt White	48490700
AXOR FinishPlus*	48490XXX

Measurements within scale drawings are in mm.
Technical specifications and units of measure are subject to change.

Overhead shower 2jet, 1jet with shower arm

2 spray types

1 spray type

Technologies

Spray types

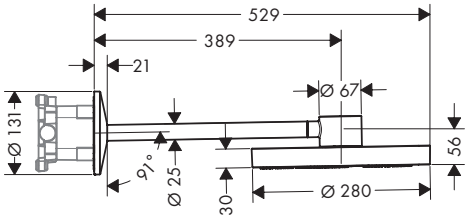

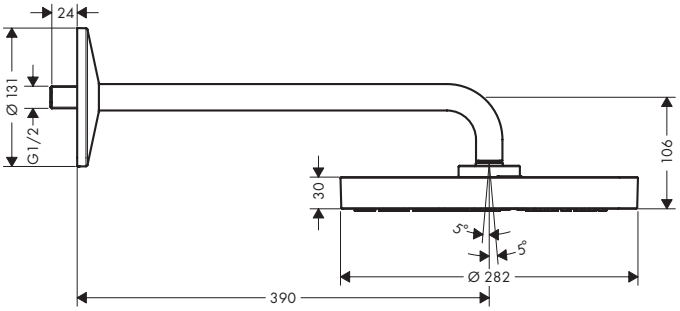

Overview variants

Shower head size	Number of sprays	Spray types	Max. flow rate at 3 bar (l/min)	Min. flow pressure (bar)	Lenght shower arm (mm)	Finish	Code no.
280	2	PowderRain, Rain	12	1.5	389	Chrome	48492000
						Matt Black	48492670
						Matt White	48492700
						AXOR FinishPlus*	48492XXX
280	1	PowderRain and Rain in combination	12.3	1.2	390	Chrome	48491000
						Matt Black	48491670
						Matt White	48491700
						AXOR FinishPlus*	48491XXX

Required parts:		For	Code no.
	Basic set for overhead shower with shower arm	48492XXX	35361180

*AXOR FinishPlus: For further AXOR FinishPlus surfaces please see the AXOR FinishPlus overview on page 27.

Overhead showers 2jet, 1jet with ceiling connector

Features of all variants

/ consists of: overhead shower, ceiling connector
/ shower head size: 280 mm
/ material spray disc: metal
/ brass ceilling connector
/ overhead shower removable for cleaning
/ installation: ceiling
/ connection dimension: DN15
/ suitable for continous flow water heaters

2 spray types

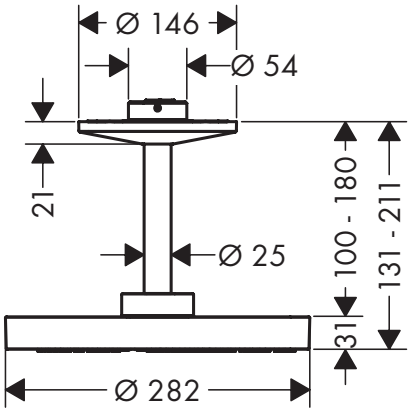

1 spray type

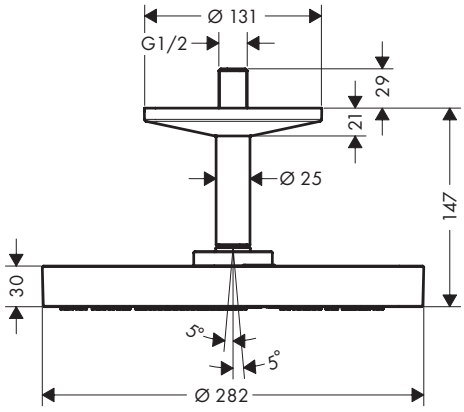

Technologies

Quick Clean

Spray types

Powder Rain

Rain

Overview variants

Shower head size	Number of sprays	Spray types	Max. flow rate at 3 bar (l/min)	Min. flow pressure (bar)	Finish	Code no.
280	2	PowderRain, Rain	18	1.5	Chrome	48494000
					Matt Black	48494670
					Matt White	48494700
					AXOR FinishPlus*	48494XXX
280	1	PowderRain and Rain in combination	12.2	1.4	Chrome	48493000
					Matt Black	48493670
					Matt White	48493700
					AXOR FinishPlus*	48493XXX

Required parts:	For	Code no.
Basic set for overhead shower with ceiling connector	48494XXX	26434180

Measurements within scale drawings are in mm.
Technical specifications and units of measure are subject to change.

Hand shower 75 1jet EcoSmart

Features

/ shower head size: 73 mm
/ spray type: PowderRain
/ maximum flow rate at 3 bar: 9,1 l/min
/ minimum flow pressure: 0,8 bar
/ material: metal
/ with internal water conduction
/ rinseable screen seal
/ connection thread G ½
/ suitable for continous flow water heaters

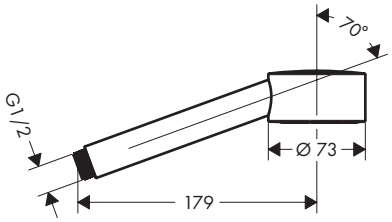

Sustainability

Technologies

Spray types

Finish	LVI-nro	Code no.
Chrome	6550153	48651000
Matt Black	6550154	48651670
Matt White		48651700
AXOR Finish-Plus*		48651XXX

Hand shower 2jet

Features

/ shower head size: 124 x 24 mm
/ spray type: Rain, flood spray
/ convenient spray selection via Select button
/ maximum flow rate at 3 bar: 12 l/min
/ minimum flow pressure: 2,4 bar
/ with internal water conduction
/ rinseable screen seal
/ connection thread G ½
/ suitable for continous flow water heaters
/ not recommended for rim-/ tile-mounted mixers

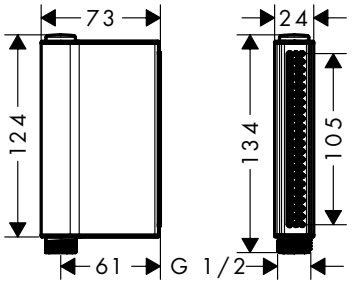

Technologies

Spray types

Finish	Code no.
Chrome	45720000
Matt Black	45720670
Matt White	45720700
AXOR FinishPlus*	45720XXX

*AXOR FinishPlus: For further AXOR FinishPlus surfaces please see the AXOR FinishPlus overview on page 27.

Porter unit

Features

/ for hoses with cylindrical nuts
/ integrated support function
/ metal
/ non-return valve
/ connection type: G ½

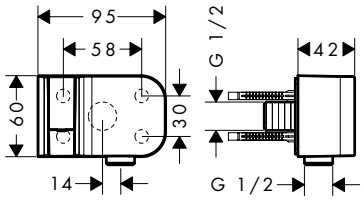

Finish	Code no.
Chrome	45723000
Matt Black	45723670
Matt White	45723700
AXOR FinishPlus*	45723XXX

Measurements within scale drawings are in mm.
Technical specifications and units of measure are subject to change.

Electronic basin mixer with temperature pre-adjustment with mains connection 230 V

Features

/ ComfortZone 100
/ projection: 148 mm
/ spray type: normal spray
/ maximum flow rate at 3 bar: 3,5 l/min
/ temperature adjustable via basic set
/ suitable for continous flow water heaters
/ infrared sensor technology
/ automatic environmental adjustment of infrared sensor
/ adjustable optical range of infrared sensor (2 settings)
/ 230 V / 50 Hz mains connection
/ running time: 10 s
/ hygiene rinse activatable (automatic water flow)
/ frequency of hygiene rinse: 24 h
/ flushing time hygiene rinse: 10 s
/ permanent rinse activatable (single water flow for 180 seconds, suitable for thermal disinfection)
/ cleaning mode: manual water stop for washbasin cleaning
/ connection dimension: DN15
/ dirt filters in the connection hoses

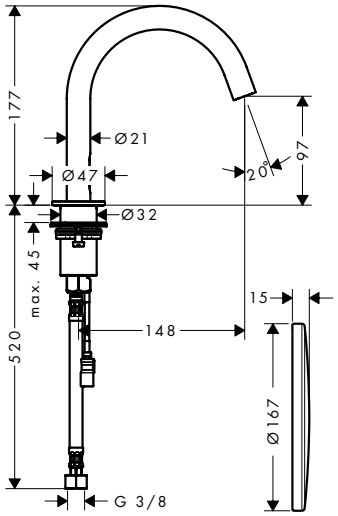

Sustainability

EcoSmart

Technologies

Sensor Activation | AirPower | Comfort Zone

Finish	LVI-nro	Code no.
Chrome	6150571	38010000
Brushed Gold Optic		38010250
Matt Black	6150815	38010670
Matt White		38010700
Stainless Steel Optic		38010800
Brushed Brass		38010950
Polished Gold Optic		38010990
AXOR FinishPlus*		38010XXX

This product is not available in the AXOR FinishPlus surfaces Red Gold and Black Chrome.

Required parts:	Code no.
Basic set for electronic basin mixer	16182180

*AXOR FinishPlus: For further AXOR FinishPlus surfaces please see the AXOR FinishPlus overview on page 27.

Electronic basin mixers for concealed installation wall-mounted

Features of all variants

/ spray type: normal spray
/ maximum flow rate at 3 bar: 5 l/min
/ temperature adjustable via basic set
/ infrared sensor technology
/ automatic environmental adjustment of infrared sensor
/ adjustable optical range of infrared sensor (5 settings)
/ 230 V / 50 Hz mains connection
/ hygiene rinse activatable (automatic water flow)
/ frequency of hygiene rinse: 24 h
/ flushing time hygiene rinse: 10 s
/ permanent rinse activatable (single water flow for 180 seconds, suitable for thermal disinfection)
/ cleaning mode: manual water stop for washbasin cleaning
/ TÜV certified
/ dirt filters in the connection hoses
/ for ideal function please note a minimum distance of 140 mm from the aerators center to the back rim of the wash basin

165

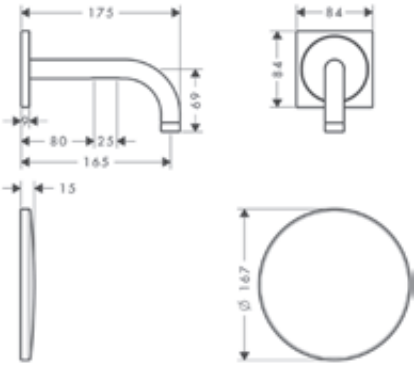

225

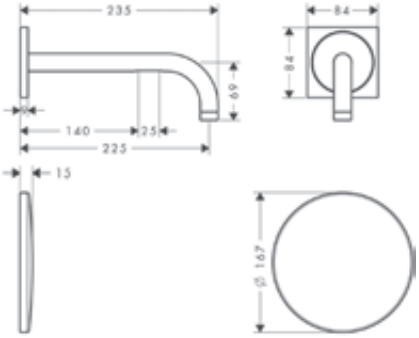

Sustainability

EcoSmart

Technologies

Sensor Activation
AirPower

Certificates/declarations

EPD

Overview variants

	Projection (mm)	Finish	LVI-nro	Code no.
	165	Chrome	6150165	38119000
		Matt Black	6150816	38119670
		Matt White		38119700
		AXOR FinishPlus*		38119XXX
	225	Chrome	6150166	38120000
		Matt Black	6150817	38120670
		Matt White		38120700
		AXOR FinishPlus*		38120XXX

Required parts:		Code no.
	Basic set for electronic basin mixer for concealed installation wall-mounted	16180180

Measurements within scale drawings are in mm.
Technical specifications and units of measure are subject to change.

Bath spouts

Features of all variants

/ 1 function
/ with escutcheon
/ wall-mounted
/ maximum flow rate at 3 bar: 19 l/min
/ connection dimension: DN20
/ spray type: normal spray

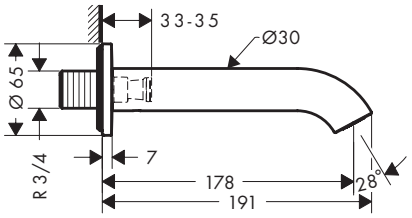

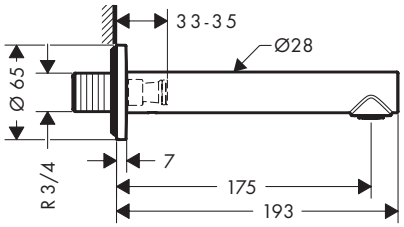

Technologies

AirPower | Quick Clean

Overview variants

Projection (mm)	Version	Finish	Code no.
178	curved	Chrome	38411000
		Matt Black	38411670
		Matt White	38411700
		AXOR FinishPlus*	38411XXX
175	straight	Chrome	45410000
		AXOR FinishPlus*	45410XXX

Bath spouts floor-standing

Features of all variants

/ 1 function
/ connection type: basic set
/ projection: 226 mm
/ free-standing installation
/ maximum flow rate at 3 bar: 18 l/min
/ spray type: normal spray

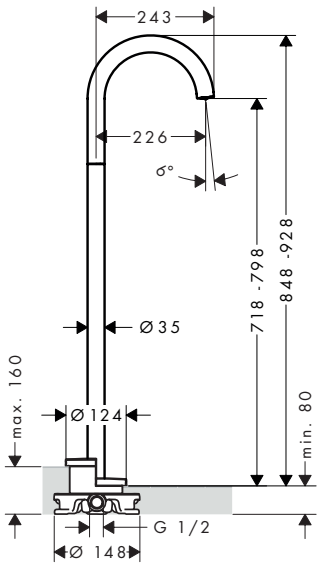

Technologies

AirPower | Quick Clean

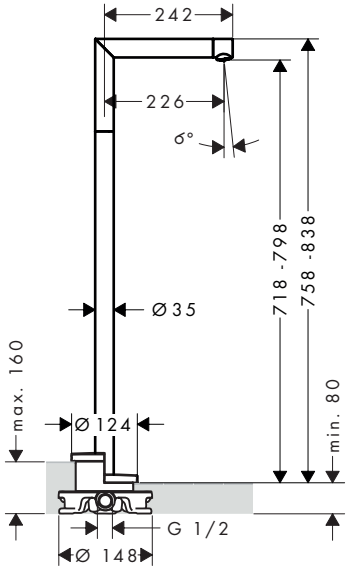

For more information about this product, please see the next page.

*AXOR FinishPlus: For further AXOR FinishPlus surfaces please see the AXOR FinishPlus overview on page 27.

Bath spouts floor-standing

Overview variants

Projection (mm)	Version	Finish	Code no.
226	curved	Chrome	38412000
		Matt Black	38412670
		Matt White	38412700
		AXOR FinishPlus*	38412XXX
226	straight	Chrome	45412000
		AXOR FinishPlus*	45412XXX

Required parts:	Code no.
Basic set for mixers floor-standing	10452180

Metal effect shower hoses

Features of all variants

/ high-quality shower hose with metal effect
/ with plastic coating, easy to clean
/ pivot connector prevents hose from tangling
/ kink-protected
/ connection thread: G ½

conical nut on both sides

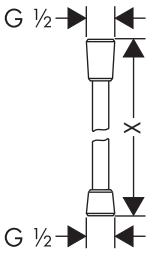

cylindrical nut on both sides

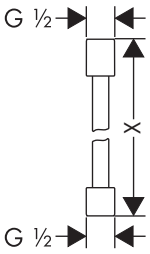

Certificates/declarations

EPD

Overview variants

Nuts shower hose	Length (m)	Finish	LVI-nro	Code no.
conical on both sides	2,00	Chrome		28624000
		Matt Black		28624670
		AXOR FinishPlus*		28624XXX
conical on both sides	1,60	Chrome		28626000
		Matt Black		28626670
		AXOR FinishPlus*		28626XXX
conical on both sides	1,25	Chrome		28622000
		Matt Black		28622670
		AXOR FinishPlus*		28622XXX
cylindrical on both sides	2,00	Chrome	6555307	28284000
		AXOR FinishPlus*		28284XXX
cylindrical on both sides	1,60	Chrome	6555308	28286000
		Matt Black		28286670
		Matt White		28286700
		AXOR FinishPlus*		28286XXX
cylindrical on both sides	1,25	Chrome	6555306	28282000
		Matt Black	6550152	28282670
		Matt White		28282700
		AXOR FinishPlus*		28282XXX

Measurements within scale drawings are in mm.
Technical specifications and units of measure are subject to change.

Design trap Flowstar S

Features

/ adjustment distance 60 - 165 mm
/ distance to wall 330 mm
/ odour trap - backwater height is 75 mm
/ connection dimension entry: G 1¼

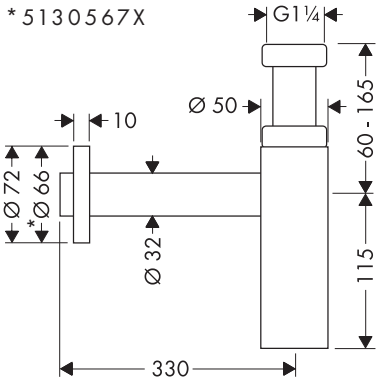

Finish	Code no.
Chrome	51305000
Matt Black	51305670
Matt White	51305700
AXOR FinishPlus*	51305XXX

Cover

Features

/ for angle valve
/ packaging unit: 1 piece

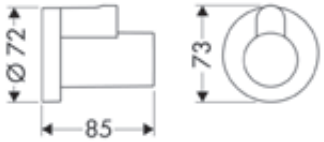

Finish	Code no.
Chrome	51306000
Matt Black	51306670
Matt White	51306700
AXOR FinishPlus*	51306XXX

*AXOR FinishPlus: For further AXOR FinishPlus surfaces please see the AXOR FinishPlus overview on page 27.

AXOR

AXOR Edge

Basin	80
Bath	82
Shower	83
Thermostatic mixers	83

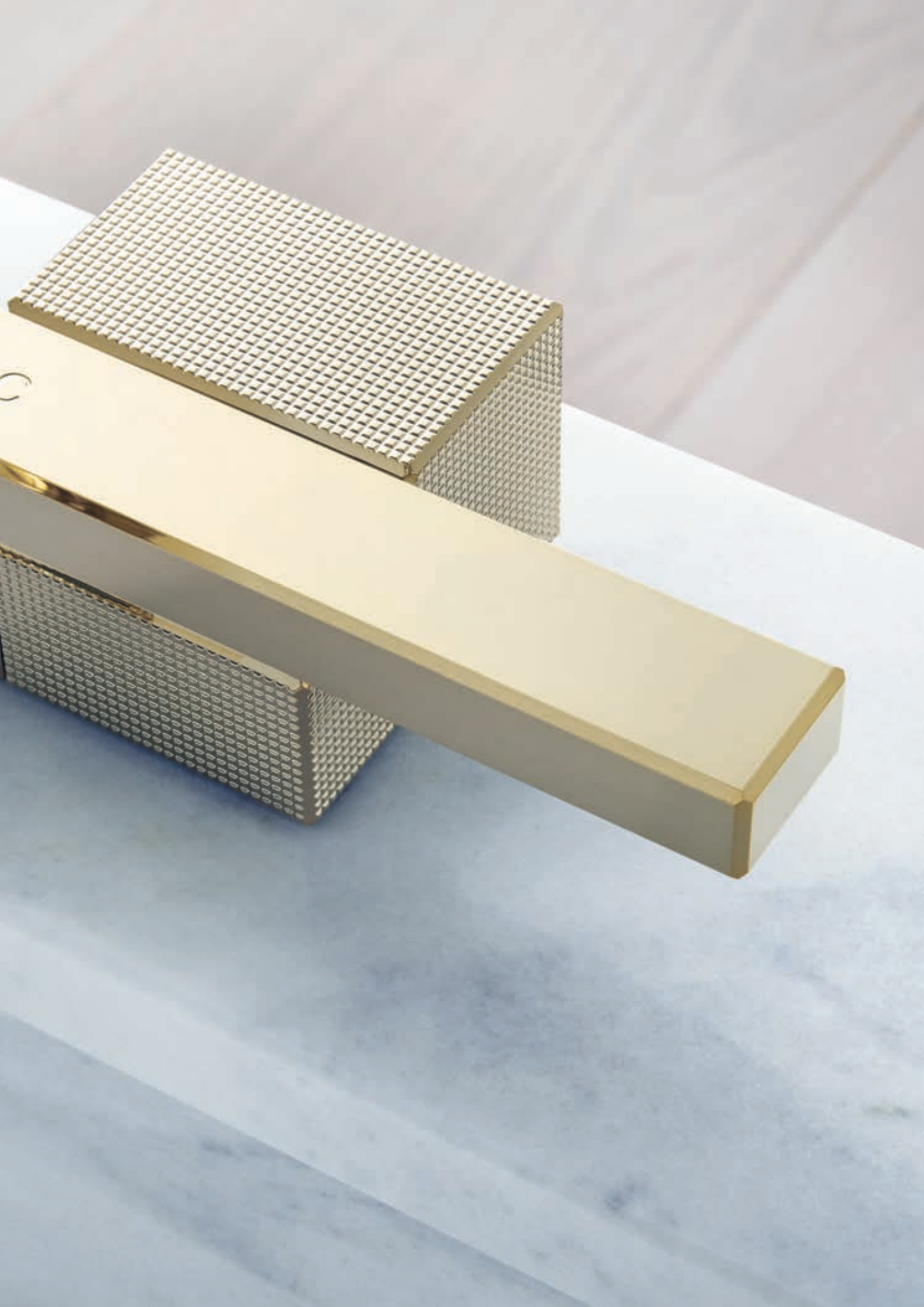

AXOR Edge

The power of architectonics

AXOR Edge is a masterpiece in the tradition of the early 20th century avant-garde. Cubes, the distinctive design element, are put together asymmetrically to form an architectonic sculpture. In addition to the geometric shapes, the collection is characterized by the ultra-precision of its surfaces and edges, which turns the fixtures into brilliant, high-gloss jewels for the bathroom.

Design: Jean-Marie Massaud

"WITH AXOR EDGE, WE EXPLORE THE WORLD OF EXTREME REFINEMENT AND UNIQUENESS."

Jean-Marie Massaud

CHARACTERISTIC DESIGN FEATURE:
Avant-garde design: Asymmetrically arranged blocks create a mixer that is an architectonic sculpture.

THE DESIGNER'S IDEA:
Jewels for the bathroom: With AXOR Edge we wanted to make a sculpture out of an object we use every day, a sculpture that evokes emotion with its precise edges, high-gloss surfaces and refined structures.

SPECIAL COLLECTION HIGHLIGHTS:

- High-gloss surfaces: The brilliance is generated by especially precise milling of the surfaces and edges
- New production technology: Using a diamond-cutting machine of the latest generation. It sets new technological standards in the manufacturing process. The precision is comparable to that of the watch, jewelry and optical industries
- Diamond-cut: Fine, luxurious structural details provide exciting contrasts and a special sensory experience
- Complete set of bathroom fittings: Mixers for the wash basin and bathtub as well as thermostats for the shower
- AXOR Edge is the second collection created in cooperation with French star designer Jean-Marie Massaud

Learn more about AXOR Edge:
axor-design.com

The genesis of a masterpiece

When diamonds are used in a production process, it's to ensure the greatest precision and the finest details with the most refined materials. Precision is the foundation for brilliance, and production with diamonds is the benchmark for perfect surfaces and edges. Manufacturing AXOR Edge depends on precision to thousandths of a millimeter. An exactness that is realized by using a diamond-cutting machine of the newest generation, a tool like those used in the aerospace and laser industries.

The beveled chamfers are milled at an angle of exactly 45° and join together with absolute precision. This creates a surface without any unevenness, which reflects light perfectly. Standards for testing gloss level in quality assurance, redefined especially for this collection, ensure that exactly these high requirements are met.

The fine pattern structures are created with the same precision: the diamond cut. By milling the solid block of brass line by line in several steps, precise pyramid frustums are formed, creating a luxurious detail that provides exciting contrasts.

RIGHT: A line that will become a diamond cut in the finished appearance is milled up to five times.
LEFT, TOP AND BOTTOM: A diamond is used to mill the beveled chamfer at an angle of exactly 45° to a high gloss.

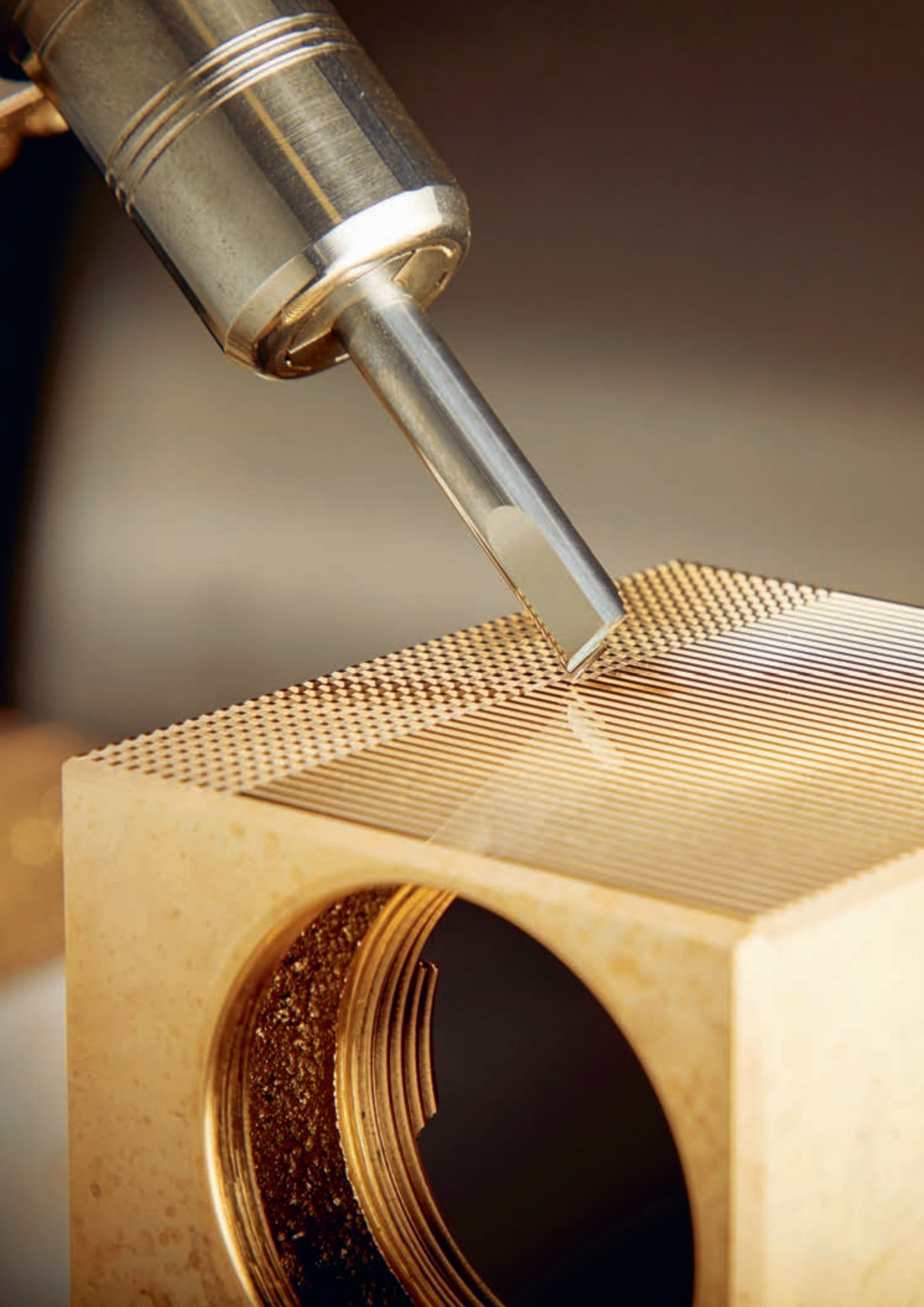

Bringing high-gloss and ultra-precision together in one mixer

AXOR Edge mixers break through boundaries: High-gloss surfaces are a striking feature of the collection. To achieve this brilliance, the highest precision is required in production so that light breaks perfectly on the surface of the mixer. That's why a diamond-cutting machine is used. It creates facets on the surfaces and chamfers of the mixer with precision to the micrometer, generating a fascinating play of light and shadow. Exactly these precise details – the meticulous 45° chamfer and the innovative, three-dimensional diamond cut – turn the mixer into a gem.

The AXOR Edge concealed thermostat module Select for five functions offers optimum control for the AXOR ShowerHeaven 1200/300 4jet. With the generously sized Select buttons, control is intuitive. Operate up to five spray modes or showers mechanically at the press of a button.

EASY TO SELECT OUTLETS
Selecting the proper outlet is simple thanks to engraved, easy to read icons

VOLUME CONTROL
Control volume with the on/off function for water flow

DIAMOND CUT
The three-dimensionality of the diamond cut, with its precise pyramid frustums, creates a new sensory experience

TEMPERATURE ADJUSTMENT
Thermostatic mixer with clear temperature display

INTUITIVE OPERATION
Large Select buttons enable intuitive operation

For matching products please refer to the AXOR Program chapters

AXOR Showers P. 208 | AXOR Accessories P. 272 | AXOR Basins & bathtubs P. 322 | AXOR Electronic P. 312

Single lever basin mixers

Features of all variants

/ consists of: single lever basin mixer, waste set
/ handle variant: lever handle
/ spray type: normal spray
/ maximum flow rate at 3 bar: 5 l/min
/ ceramic cartridge
/ temperature limitation adjustable
/ suitable for continuous flow water heaters
/ push-open waste set G 1¼
/ material waste set: metal
/ connection type: G ⅜ connections
/ connection dimension: DN15
/ EU taxonomy: max. 6 l/min - Substantial Contribution (SC) possible

130

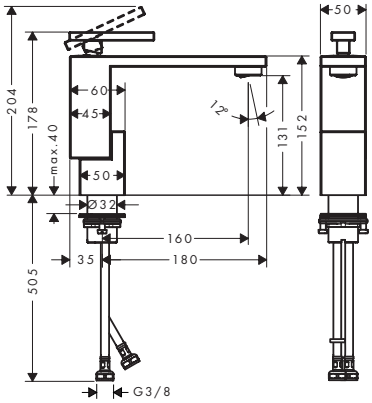

280

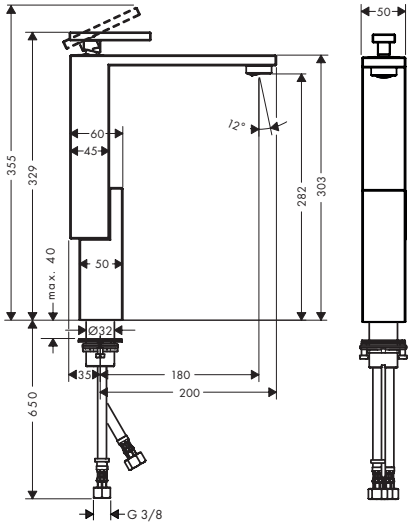

Sustainability

EcoSmart

Technologies

AirPower
Comfort Zone

Overview variants

ComfortZone	Projection (mm)	Spout height (mm)	For wash bowls	Structure element	Finish	Code no.
130	160	131	–	without structure	Chrome	46010000
					Polished Red Gold	46010300
					Polished Black Chrome	46010330
					Polished Gold Optic	46010990
					AXOR FinishPlus*	46010XXX
130	160	131	–	diamond cut	Chrome	46011000
					Polished Red Gold	46011300
					Polished Black Chrome	46011330
					Polished Gold Optic	46011990
					AXOR FinishPlus*	46011XXX
280	180	282	■	without structure	Chrome	46030000
					Polished Red Gold	46030300
					Polished Black Chrome	46030330
					Polished Gold Optic	46030990
					AXOR FinishPlus*	46030XXX

Measurements within scale drawings are in mm.
Technical specifications and units of measure are subject to change.

Single lever basin mixers

Overview variants

ComfortZone	Projection (mm)	Spout height (mm)	For wash bowls	Structure element	Finish	Code no.
280	180	282	■	diamond cut	Chrome	46031000
					Polished Red Gold	46031300
					Polished Black Chrome	46031330
					Polished Gold Optic	46031990
					AXOR FinishPlus*	46031XXX

This product is not available in brushed AXOR FinishPlus surfaces.

3-hole basin mixers

Features of all variants

/ consists of: 3-hole basin mixer, waste set
/ ComfortZone 130
/ projection: 173 mm
/ spout height: 130 mm
/ handle variant: lever handle
/ spray type: normal spray
/ maximum flow rate at 3 bar: 5 l/min
/ ceramic valves hot/cold 90°
/ suitable for continuous flow water heaters
/ push-open waste set G 1¼
/ material waste set: metal
/ connection type: G ⅜ connections
/ connection dimension: DN15
/ EU taxonomy: max. 6 l/min - Substantial Contribution (SC) possible

Sustainability

EcoSmart

Technologies

AirPower | Comfort Zone

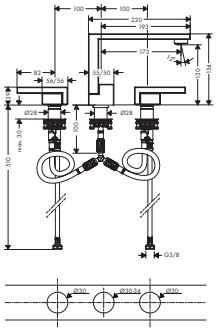

diamond cut

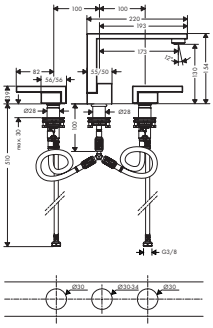

Overview variants

ComfortZone	Projection (mm)	Spout height (mm)	Structure element	Finish	Code no.
130	173	130	without structure	Chrome	46050000
				AXOR FinishPlus*	46050XXX
130	173	130	diamond cut	Chrome	46051000
				AXOR FinishPlus*	46051XXX

This product is not available in brushed AXOR FinishPlus surfaces.

3-hole basin mixers wall mounted

Features of all variants

/ consists of: 3-hole basin mixer, waste set
/ projection: 190 mm
/ handle variant: lever handle
/ spray type: normal spray
/ maximum flow rate at 3 bar: 5 l/min
/ ceramic valves hot/cold 90°
/ suitable for continuous flow water heaters
/ push-open waste set G 1¼
/ material waste set: metal
/ connection type: basic set
/ connection dimension: DN15
/ EU taxonomy: max. 6 l/min - Substantial Contribution (SC) possible

Sustainability

EcoSmart

Technologies

AirPower

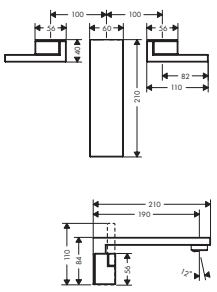

diamond cut

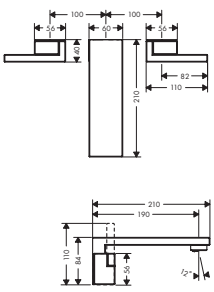

For more information about this product, please see the next page.

*AXOR FinishPlus: For further AXOR FinishPlus surfaces please see the AXOR FinishPlus overview on page 27.

3-hole basin mixers wall mounted

Overview variants

Projection (mm)	Structure element	Finish	Code no.
190	without structure	Chrome	46060000
		Polished Red Gold	46060300
		Polished Black Chrome	46060330
		Polished Gold Optic	46060990
		AXOR FinishPlus*	46060XXX
190	diamond cut	Chrome	46061000
		Polished Red Gold	46061300
		Polished Black Chrome	46061330
		Polished Gold Optic	46061990
		AXOR FinishPlus*	46061XXX

This product is not available in brushed AXOR FinishPlus surfaces.

Required parts:	Code no.
Basic set for 3-hole basin mixer for concealed installation wall-mounted	10303180

Bath spouts

Features of all variants

/ 1 function
/ projection: 190 mm
/ wall-mounted
/ maximum flow rate at 3 bar: 23 l/min
/ connection dimension: G ½
/ spray type: normal spray

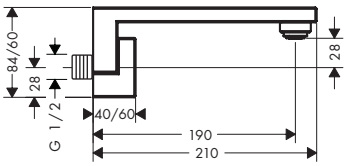

diamond cut

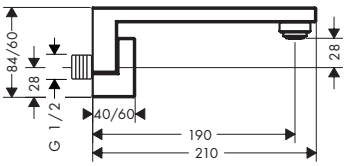

Technologies

AirPower

Overview variants

Projection (mm)	Structure element	Finish	Code no.
190	without structure	Chrome	46410000
		AXOR FinishPlus*	46410XXX
190	diamond cut	Chrome	46411000
		AXOR FinishPlus*	46411XXX

This product is not available in brushed AXOR FinishPlus surfaces.

Measurements within scale drawings are in mm.
Technical specifications and units of measure are subject to change.

Porter units

Features of all variants

/ consists of: baton hand shower, porter unit, shower holder, shower hose
/ integrated support function
/ spray type: Rain, Mono
/ maximum flow rate at 3 bar: 16,2 l/min
/ minimum flow pressure: 1 bar
/ operating pressure: min. 1 bar/max. 10 bar
/ shower hose with cylindrical nut on both ends
/ with non-return valve
/ wall mounting: screw fastening

diamond cut

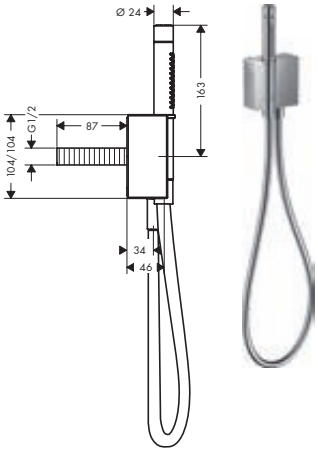

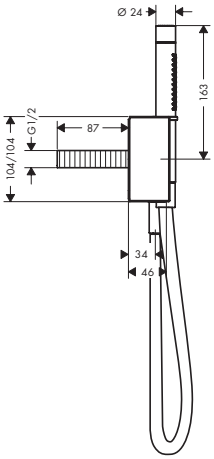

Technologies

Quick Clean

Spray types

Rain Mono

Overview variants

Number of sprays	Spray types	Max. flow rate at 3 bar (l/min)	Min. flow pressure (bar)	Structure element	Finish	Code no.
2	Rain, Mono	16.2	1	without structure	Chrome	46520000
					AXOR FinishPlus*	46520XXX
2	Rain, Mono	16.2	1	diamond cut	Chrome	46521000
					AXOR FinishPlus*	46521XXX

This product is not available in brushed AXOR FinishPlus surfaces.

Thermostats exposed/concealed installation

Features of all variants

/ simultaneous use of several outlets
/ depending on volume flow and installation situation approx. 50% flow rate reduction
/ thermostat cartridge
/ min. operating pressure: 1 bar
/ max. operating pressure: 10 bar
/ Safety stop at 40 °C
/ temperature limitation adjustable
/ non-return valve
/ shelf made of safety glass
/ surface shelf: frosted grey glass
/ connection dimension: DN15
/ connection type: basic set

2 functions

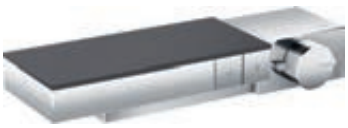

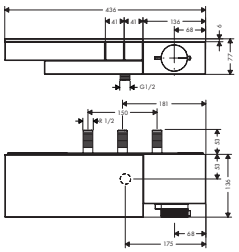

3 functions

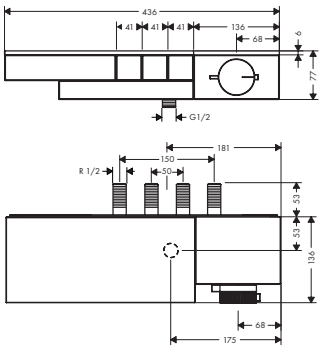

Sustainability

Water Flow Control

Technologies

Thermostat °C Select SELECT

Overview variants

Number of functions	Max. flow rate at 3 bar (l/min)	Structure element	Finish	Code no.
2 functions	24	without structure	Chrome	46240000
			AXOR FinishPlus*	46240XXX
2 functions	24	diamond cut	Chrome	46241000
			AXOR FinishPlus*	46241XXX

For more information about this product, please see the next page.

*AXOR FinishPlus: For further AXOR FinishPlus surfaces please see the AXOR FinishPlus overview on page 27.

Thermostats exposed/concealed installation

Overview variants

Number of functions	Max. flow rate at 3 bar (l/min)	Structure element	Finish	Code no.
3 functions	21	without structure	Chrome	46140000
			AXOR FinishPlus*	46140XXX
3 functions	21	diamond cut	Chrome	46141000
			AXOR FinishPlus*	46141XXX

This product is not available in brushed AXOR FinishPlus surfaces.

Required parts:		For	Code no.
	Basic set for thermostat for exposed/ concealed installation for 2 functions	46240XXX 46241XXX	45442180
	Basic set for thermostat for exposed/ concealed installation for 3 functions	46140XXX 46141XXX	45443180

Thermostatic modules Select for concealed installation

Features of all variants

/ consists of: thermostatic module, shower holder, baton hand shower, shower hose
/ simultaneous use of several outlets
/ depending on volume flow and installation situation approx. 50% flow rate reduction and integrated shut off function
/ thermostat cartridge, Start/stop valve to operate the functions
/ min. operating pressure: 1 bar
/ max. operating pressure: 10 bar
/ Safety stop at 40 °C
/ temperature limitation adjustable
/ for shower hoses with a cylindrical nut
/ connection type: basic set

2 functions

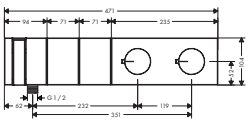

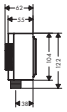

3 functions

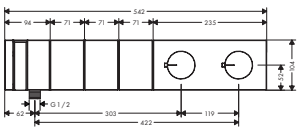

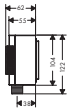

4 functions

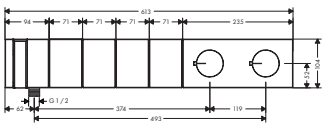

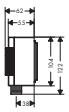

5 functions

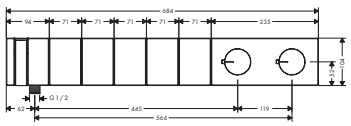

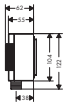

Sustainability

Water Flow Control

Technologies

Thermostat

Select

Overview variants

Number of functions	Max. flow rate at 3 bar (l/min)	Structure element	Finish	Code no.
2 functions	35	without structure	Chrome	46700000
			AXOR FinishPlus*	46700XXX
2 functions	35	diamond cut	Chrome	46701000
			AXOR FinishPlus*	46701XXX
3 functions	38	without structure	Chrome	46710000
			AXOR FinishPlus*	46710XXX

Measurements within scale drawings are in mm.
Technical specifications and units of measure are subject to change.

Thermostatic modules Select for concealed installation

Overview variants

Number of functions	Max. flow rate at 3 bar (l/min)	Structure element	Finish	Code no.
3 functions	38	diamond cut	Chrome	46711000
			AXOR FinishPlus*	46711XXX
4 functions	39	without structure	Chrome	46720000
			AXOR FinishPlus*	46720XXX
4 functions	39	diamond cut	Chrome	46721000
			AXOR FinishPlus*	46721XXX
5 functions	38	without structure	Chrome	46730000
			AXOR FinishPlus*	46730XXX
5 functions	38	diamond cut	Chrome	46731000
			AXOR FinishPlus*	46731XXX

This product is not available in brushed AXOR FinishPlus surfaces.

Required parts:	For	Code no.
Basic set for thermostatic module Select for 2 functions	46700XXX 46701XXX	18310180
Basic set for thermostatic module Select for 3 functions	46710XXX 46711XXX	18311180
Basic set for thermostatic module Select for 4 functions	46720XXX 46721XXX	18312180
Basic set for thermostatic module Select for 5 functions	46730XXX 46731XXX	18313180

*AXOR FinishPlus: For further AXOR FinishPlus surfaces please see the AXOR FinishPlus overview on page 27.

AXOR MyEdition

Basin	94
Bath	99
Plates	101

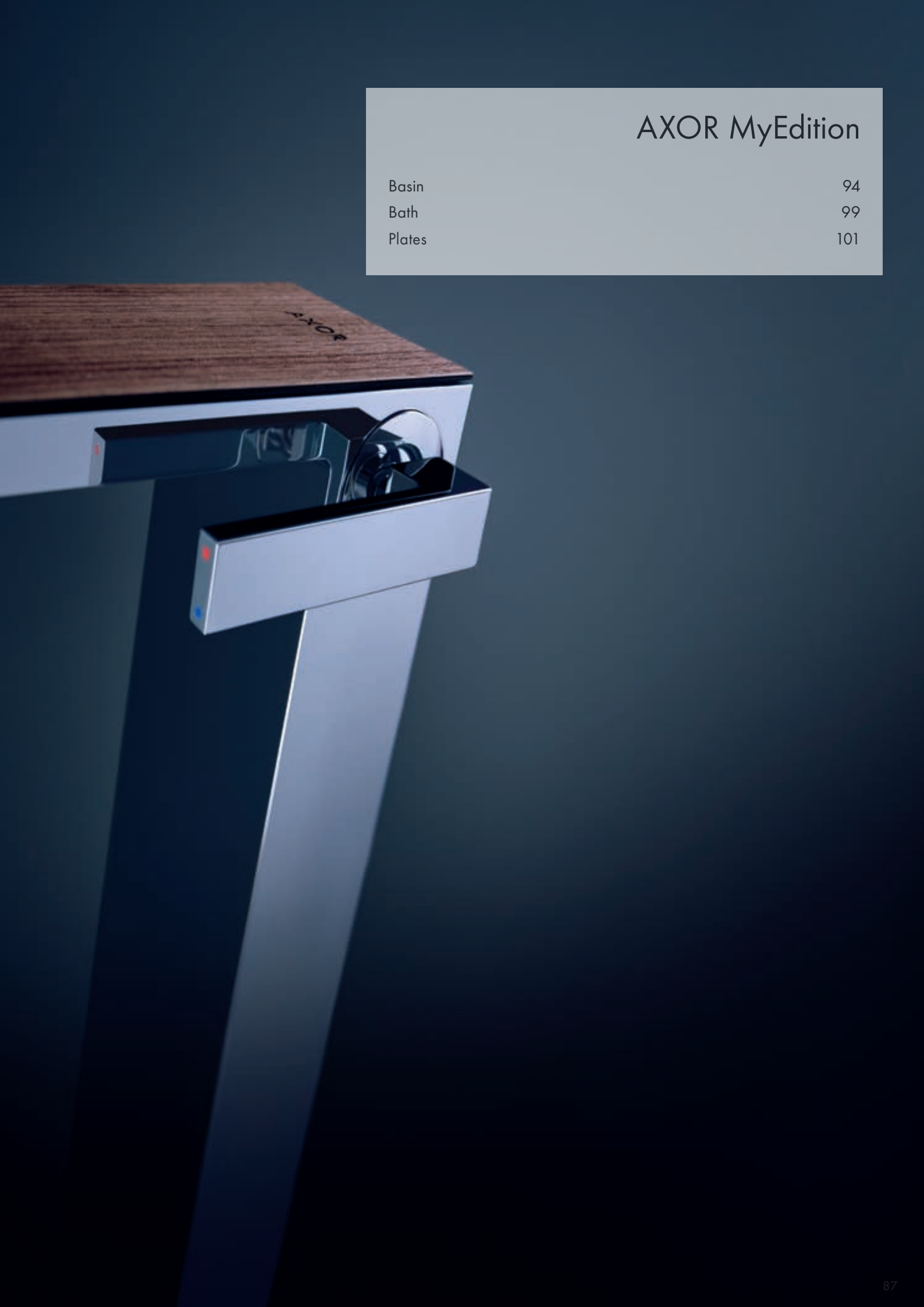

WIENER
SEIFE

AXOR MyEdition

A personal statement

With its monolithic, linear design, AXOR MyEdition provides you with a stage for self-expression. A wide selection of cover plates made of exclusive materials leaves room for your own creativity. The collection responds to a human desire to have something unique, to stand out from the crowd and to move in new directions.

Design: PHOENIX

"AXOR MYEDITION OFFERS PERFECTLY COORDINATED, MULTISENSORY EXPERIENCES."

Andreas Diefenbach, PHOENIX

CHARACTERISTIC DESIGN FEATURE:
Monolith: The distinctive rectangle, due to its weight and size, is monolithic.

THE DESIGNER'S IDEA:
A stage for your own creativity: Numerous options for individualization offer customers a platform for self-realization.

SPECIAL COLLECTION HIGHLIGHTS:

- With the neutral carrier plate, AXOR MyEdition lets you create a customized design using the custom material plate
- A new dimension of individualization with carefully selected natural materials and exclusive surface finishes
- A new look and feel with the use of natural materials such as glass, metal, wood, marble and leather, each with its own unique surface structure
- A sensual contrast to linear design: Innovative water design with the velvety soft PowderRain spray mode, available for the first time on a wash basin mixer
- Isolated water conduction: Prevents direct water contact with the body of the mixer
- Integration or contrast: The perfect complement to the interior design or a statement in the bathroom

Learn more about AXOR MyEdition:
axor-design.com

An avant-garde concept and an ingenious connection

A metal body with a chrome finish or one of the AXOR FinishPlus PVD surface. Crowned with a fascinating cover plate: With its exclusive material portfolio, AXOR Signature opens up groundbreaking potential. Metal, mirror glass, black glass and refined natural materials such as wood, marble and leather offer more appeal and new sensory experiences. AXOR MyEdition is the first.

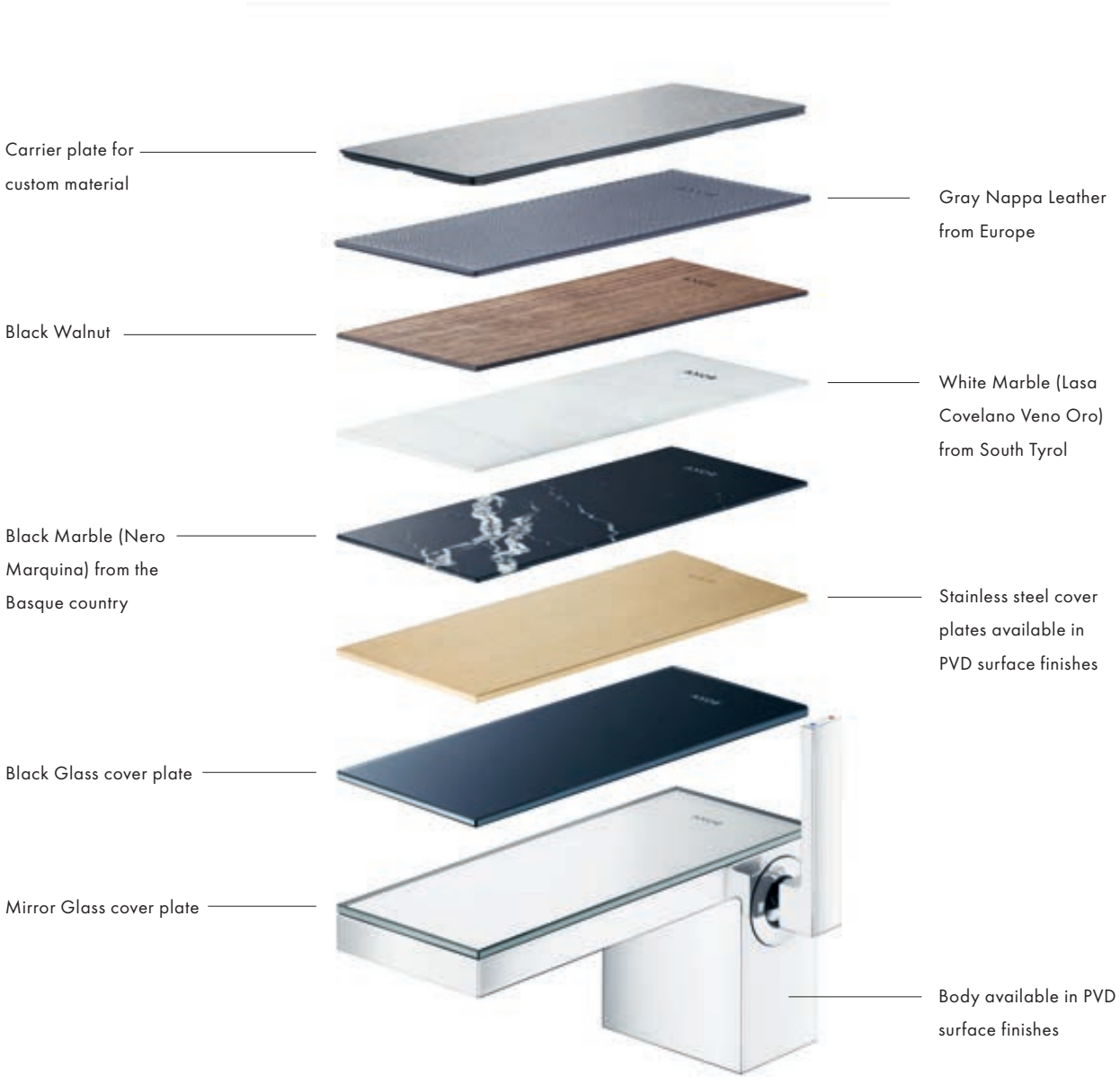

The following variants are available as standard for all nine AXOR MyEdition products with their own item numbers:

/ Chrome (body)/Mirror Glass (cover plate) (-000)
/ Chrome/Black Glass (-600)

In addition to the standard variants, the products can be configured individually and ordered with separate item numbers for body and cover plate.

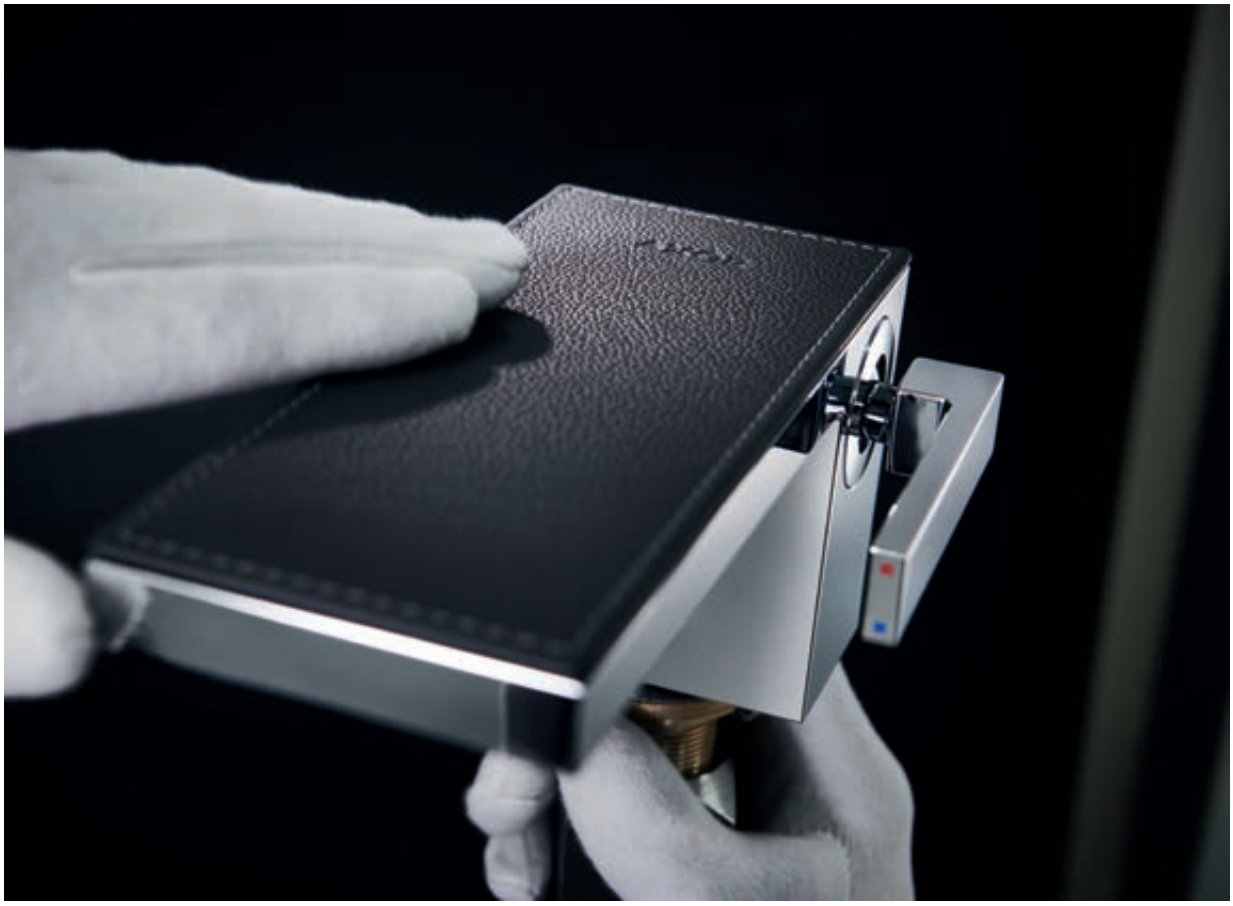

Natural materials for the bathroom – each cover plate is one of a kind

The refined materials reveal themselves in unique ways in AXOR MyEdition cover plates. Each design version is developed in an intensive process, made with precision craftsmanship and tested under the harshest conditions for mixer use in internal fatigue testing. The result is a perfect whole.

The elegant walnut veneer provides a fascinating example. Delicate sheets of wood are used to produce sturdy components with an attractive surface pattern, strikingly brown in color with a striped grain.

The white Lasa marble from South Tyrol is characterized by its fine, gold veins. The cover plates are shaved from the marble block in extremely thin layers, which are meticulously processed to produce stone veneer with a perfect surface feel.

Its dark counterpart, Nero Marquina, comes from quarries in the Basque Country of northern Spain. Deep black, with a distinctive white veining, it evokes the ultimate in elegance.

Just as meticulous is the selection of nappa leather of European origin. Due to precision processing, it is especially resilient, so it is also suitable for use in wet areas.

Each cover plate is one of a kind. This makes each AXOR MyEdition mixer into an unmistakable original. For the ultimate in individualization for wash basins and bathtubs.

To ensure the durability of the cover plates, individual cleaning recommendations are enclosed for each material.

Consistent design language – for mixer and spray

INDEPENDENT ELEMENTS
The fine line separating body and cover plate has the appearance of a shadow gap. This separation between the independent elements is what makes individualization possible

MATERIALS
The cover plate, a variable element on the mixer, can be individualized as desired, e.g. with innovative materials such as leather, marble or wood

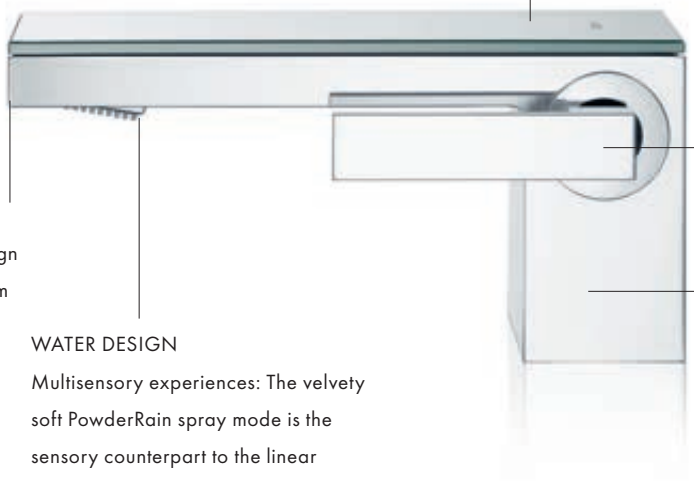

ERGONOMICS
The M25LS cartridge enables side handle placement for ergonomic use

MONOLITH
Clear, angular design language; solid form

WATER DESIGN
Multisensory experiences: The velvety soft PowderRain spray mode is the sensory counterpart to the linear design of the mixer. It provides a unique hand-washing experience

INDIVIDUALIZATION
The body is the constant element of the mixer and, together with the freedom of choice in selecting monochromatic or combined AXOR FinishPlus PVD surfaces, it forms the basis for maximum individualization

New spray formers:
The shape of the water spray is derived from the product design. In this case, a rectangular spray former was developed which, in a fixed position, is equipped with PowderRain spray mode as well as QuickClean function for easily removing calcium deposits.

PowderRain spray mode:
AXOR MyEdition is the first collection with the PowderRain spray mode. Satiny smooth droplets emerge from 170 of the finest spray nozzles for a sensual, soft and luxuriant spray experience.

Isolated water conduction:
A separated water conduction is integrated into the metal basic set which separates the conduit from the body so it remains free of lead and nickel concentrations.

Available as standard for AXOR MyEdition are the variants Chrome/Mirror Glass (-000) and Chrome/Black Glass (-600). Glass is particularly hygienic, sturdy and resistant to harsh cleaning agents.

The cover plate in natural Black Walnut has very fine dark brown coloring in various shades. In combination with the AXOR FinishPlus surface Matt Black, it's a real eye-catcher.

The brilliantly white Lasa Covelano Vena Oro Marble is fascinating with its fine, golden veining. It is sourced from a quarry in the Jenn Cliff Massif, the highest quarry in Europe, at an elevation of more than 2,220 meters.

The black Nero Marquina Marble is an exquisite, black limestone with distinctive, white quartz veining. Because it can be polished, it is called marble. The white quartz veins were formed in the later stages of the rock's development.

European Nappa Leather brings a sense of coziness to the bathroom. The gray leather has a fine, natural structure and a soft, smooth feel.

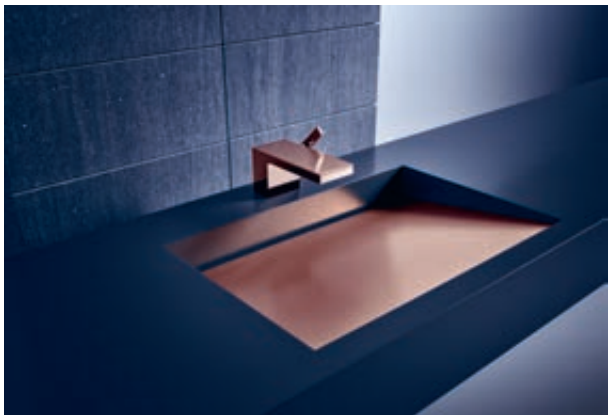

AXOR FinishPlus surfaces bring color into the bathroom. In addition to color-in-color combinations with polished or hand-brushed variants, bi-color variants can also be realized simply by exchanging the body and top.

Single lever basin mixers

Features of all variants

/ handle variant: lever handle
/ spray type: PowderRain
/ maximum flow rate at 3 bar: 5 l/min
/ ceramic cartridge
/ temperature limitation adjustable
/ with isolated water conduction - without contact with nickel and lead
/ suitable for continuous flow water heaters
/ push-open waste set G 1¼
/ connection type: G ⅜ connections
/ connection dimension: DN15
/ EU taxonomy: max. 6 l/min - Substantial Contribution (SC) possible

70 with plate

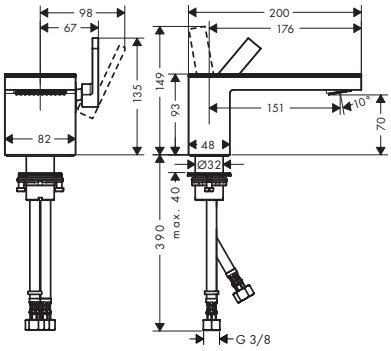

110 with plate

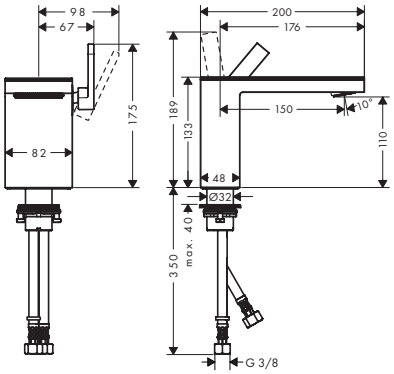

230 without plate

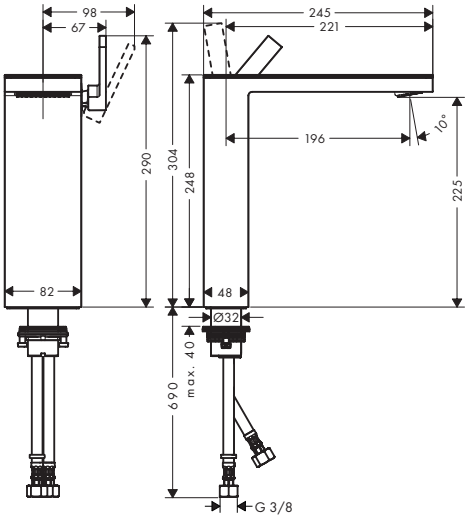

Sustainability

EcoSmart

Technologies

Comfort Zone
Quick Clean

Overview variants

ComfortZone	Projection (mm)	Spout height (mm)	For wash bowls	Cover	Finish	Available from	Code no.
70	151	70	–	with plate	Chrome/Mirror Glass		47010000
					Chrome/Black Glass		47010600
					Matt Black/ Black Glass	Q1/2024	47010670

Measurements within scale drawings are in mm.
Technical specifications and units of measure are subject to change.

Single lever basin mixers

Overview variants

ComfortZone	Projection (mm)	Spout height (mm)	For wash bowls	Cover	Finish	Available from	Code no.
70	151	70	–	without plate	Chrome		47012000
					Brushed Bronze		47012140
					Brushed Gold Optic		47012250
					Polished Red Gold		47012300
					Brushed Red Gold		47012310
					Polished Black Chrome		47012330
					Brushed Black Chrome		47012340
					Matt Black	Q1/2024	47012670
					Stainless Steel Optic		47012800
					Brushed Brass		47012950
					Polished Gold Optic		47012990
					AXOR FinishPlus*		47012XXX
110	150	110	–	with plate	Chrome/Mirror Glass		47030000
					Chrome/Black Glass		47030600
					Matt Black/ Black Glass	Q1/2024	47030670
110	150	110	–	without plate	Chrome		47032000
					Matt Black	Q1/2024	47032670
					AXOR FinishPlus*		47032XXX
230	196	225	■	with plate	Chrome/Mirror Glass		47020000
					Chrome/Black Glass		47020600
					Matt Black/ Black Glass	Q1/2024	47020670
230	196	225	■	without plate	Chrome		47022000
					Brushed Bronze		47022140
					Brushed Gold Optic		47022250
					Polished Red Gold		47022300
					Brushed Red Gold		47022310
					Polished Black Chrome		47022330
					Brushed Black Chrome		47022340
					Matt Black	Q1/2024	47022670
					Stainless Steel Optic		47022800
					Brushed Brass		47022950
					Polished Gold Optic		47022990
					AXOR FinishPlus*		47022XXX

*AXOR FinishPlus: For further AXOR FinishPlus surfaces please see the AXOR FinishPlus overview on page 27.

Single lever basin mixers for concealed installation wall-mounted

Features of all variants

/ projection: 221 mm
/ spout height: 82 mm
/ handle variant: lever handle
/ spray type: PowderRain
/ maximum flow rate at 3 bar: 5 l/min
/ ceramic cartridge
/ temperature limitation adjustable
/ with isolated water conduction - without contact with nickel and lead
/ suitable for continuous flow water heaters
/ non-closing waste set
/ connection type: basic set
/ connection dimension: DN15
/ handle can be positioned on the right or left, depending on the basic set installation
/ EU taxonomy: max. 6 l/min - Substantial Contribution (SC) possible

221 with plate

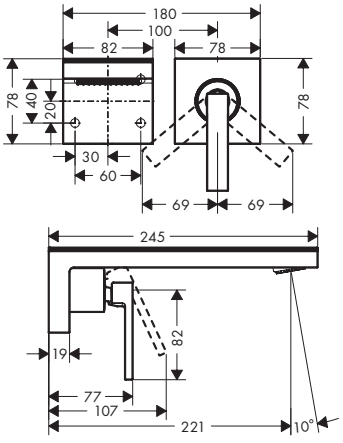

221 without plate

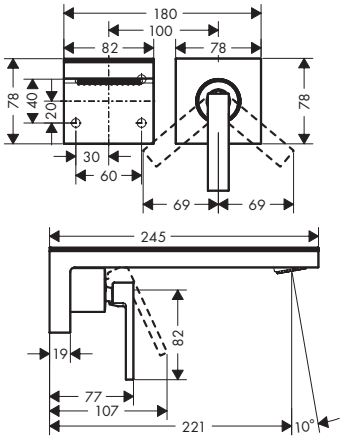

Sustainability

EcoSmart

Technologies

Quick Clean

Overview variants

Projection (mm)	Cover	Finish	Available from	Code no.
221	with plate	Chrome/Mirror Glass		47060000
		Chrome/Black Glass		47060600
		Matt Black/ Black Glass	Q1/2024	47060670
221	without plate	Chrome		47062000
		Brushed Bronze		47062140
		Brushed Gold Optic		47062250
		Polished Red Gold		47062300
		Brushed Red Gold		47062310
		Polished Black Chrome		47062330
		Brushed Black Chrome		47062340
		Matt Black	Q1/2024	47062670
		Stainless Steel Optic		47062800
		Brushed Brass		47062950
		Polished Gold Optic		47062990
		AXOR FinishPlus*		47062XXX

Required parts:		Code no.
	Basic set for single lever basin mixer for concealed installation wall-mounted	13623180

Measurements within scale drawings are in mm.
Technical specifications and units of measure are subject to change.

3-hole basin mixers

Features of all variants

/ handle variant: lever handle
/ spray type: PowderRain
/ maximum flow rate at 3 bar: 5 l/min
/ ceramic valves hot/cold 90°
/ with isolated water conduction - without contact with nickel and lead
/ suitable for continuous flow water heaters
/ push-open waste set G 1¼
/ connection type: G ⅜ connections
/ connection dimension: DN15
/ EU taxonomy: max. 6 l/min - Substantial Contribution (SC) possible

70 with plate

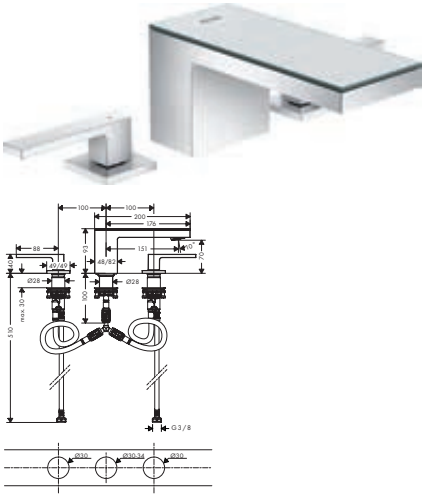

70 without plate

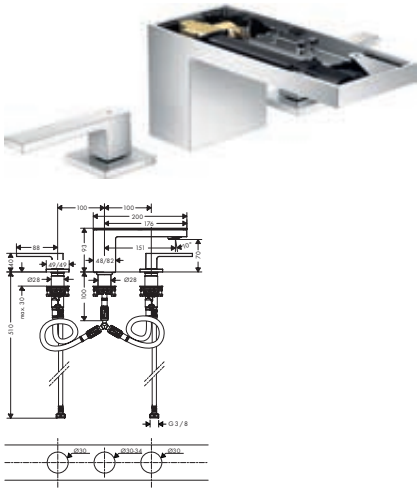

110 with plate

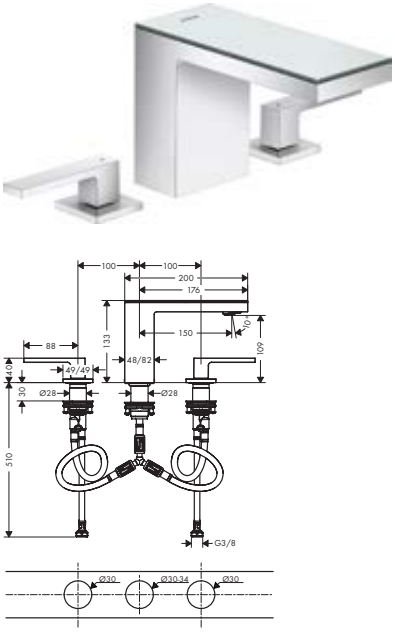

Sustainability

EcoSmart

Technologies

Comfort Zone | Quick Clean

Overview variants

ComfortZone	Projection (mm)	Spout height (mm)	Cover	Finish	Available from	Code no.
70	151	70	with plate	Chrome/Mirror Glass		47050000
				Chrome/Black Glass		47050600
				Matt Black/ Black Glass	Q1/2024	47050670
70	151	70	without plate	Chrome		47052000
				Brushed Bronze		47052140
				Brushed Gold Optic		47052250
				Polished Red Gold		47052300
				Brushed Red Gold		47052310
				Polished Black Chrome		47052330
				Brushed Black Chrome		47052340
				Matt Black	Q1/2024	47052670
				Stainless Steel Optic		47052800
				AXOR FinishPlus*		47052XXX
110	150	109	with plate	Chrome/Mirror Glass		47070000
				Chrome/Black Glass		47070600
				Matt Black/ Black Glass	Q1/2024	47070670
110	150	109	without plate	Chrome		47072000
				Matt Black	Q1/2024	47072670
				AXOR FinishPlus*		47072XXX

*AXOR FinishPlus: For further AXOR FinishPlus surfaces please see the AXOR FinishPlus overview on page 27.

Single lever basin mixers floor-standing

Features of all variants

/ projection: 196 mm
/ spout height: 1158 mm
/ handle variant: lever handle
/ spray type: PowderRain
/ maximum flow rate at 3 bar: 5 l/min
/ ceramic cartridge
/ temperature limitation adjustable
/ with isolated water conduction - without contact with nickel and lead
/ suitable for continuous flow water heaters
/ push-open waste set G 1¼
/ connection type: basic set
/ connection dimension: DN15
/ EU taxonomy: max. 6 l/min - Substantial Contribution (SC) possible

with plate

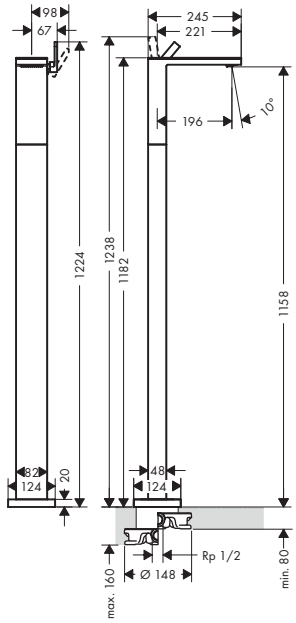

without plate

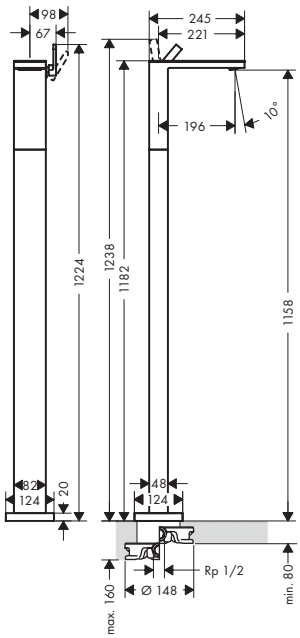

Sustainability

EcoSmart

Technologies

Quick Clean

Overview variants

Projection (mm)	Cover	Finish	Available from	Code no.
196	with plate	Chrome/Mirror Glass		47040000
		Chrome/Black Glass		47040600
		Matt Black/ Black Glass	Q1/2024	47040670
196	without plate	Chrome		47042000
		Brushed Bronze		47042140
		Brushed Gold Optic		47042250
		Polished Red Gold		47042300
		Brushed Red Gold		47042310
		Polished Black Chrome		47042330
		Brushed Black Chrome		47042340
		Matt Black	Q1/2024	47042670
		Stainless Steel Optic		47042800
		Brushed Brass		47042950
		Polished Gold Optic		47042990
		AXOR FinishPlus*		47042XXX

Required parts:	Code no.
Basic set for mixers floor-standing	10452180

Measurements within scale drawings are in mm.
Technical specifications and units of measure are subject to change.

Single lever bath mixers floor-standing

Features of all variants

/ 2 functions
/ projection: 196 mm
/ spray type mixer: normal spray
/ spray type hand shower: Rain, Mono
/ maximum flow rate at 3 bar: 20 l/min
/ flow rate for bath spout at 3 bar: 20 l/min
/ flow rate of hand shower at 3 bar: 13 l/min
/ Ceramic cartridge
/ temperature limitation adjustable
/ diverter with automatic resetting
/ non-return valve
/ connection dimension: DN15
/ connection type: basic set
/ deck mounted
/ min. operating pressure: 1 bar
/ max. operating pressure: 10 bar

with plate

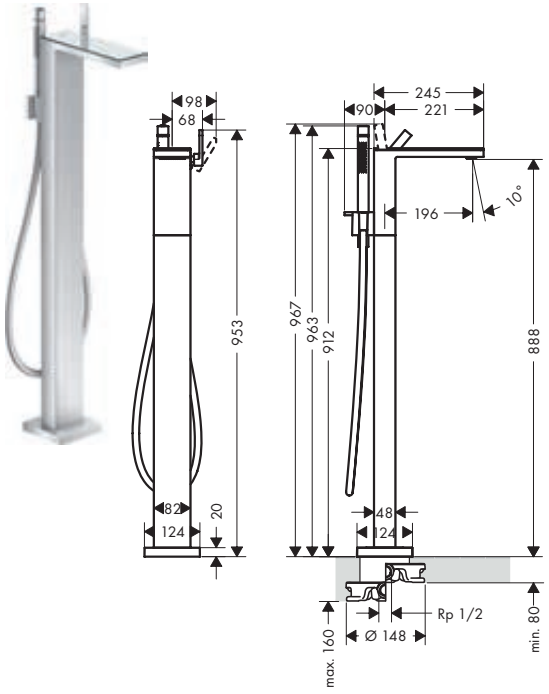

without plate

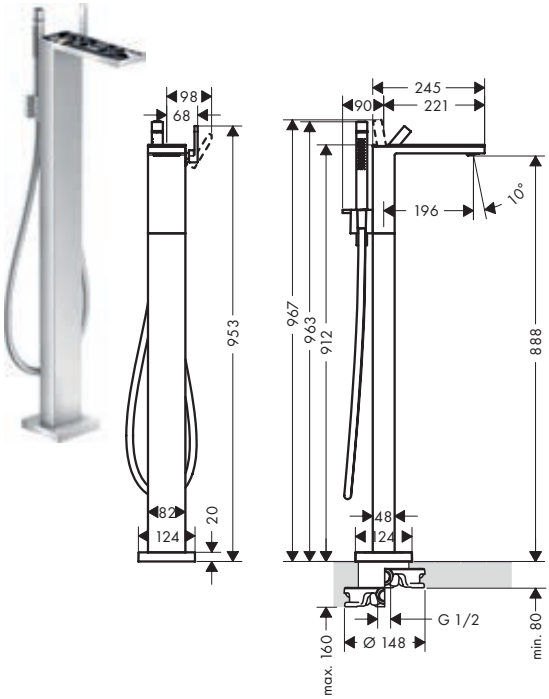

Technologies

Quick Clean

Spray types

Rain | Mono

Overview variants

Projection (mm)	Cover	Finish	Available from	Code no.
196	with plate	Chrome/Mirror Glass		47440000
		Chrome/Black Glass		47440600
		Matt Black/ Black Glass		47440670
196	without plate	Chrome		47442000
		Brushed Bronze		47442140
		Brushed Black Chrome		47442340
		Matt Black	Q1/2024	47442670
		AXOR FinishPlus*		47442XXX

Required parts:	Code no.
Basic set for mixers floor-standing	10452180

*AXOR FinishPlus: For further AXOR FinishPlus surfaces please see the AXOR FinishPlus overview on page 27.

Bath spouts

Features of all variants

/ 1 function
/ projection: 176 mm
/ wall-mounted
/ maximum flow rate at 3 bar: 24 l/min
/ connection dimension: DN15
/ spray type: normal spray

with plate

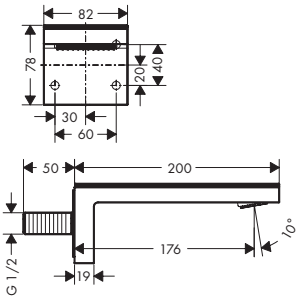

without plate

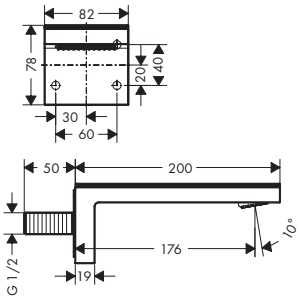

Technologies

AirPower
Quick Clean

Overview variants

Projection (mm)	Cover	Finish	Available from	Code no.
176	with plate	Chrome/Mirror Glass		47410000
		Chrome/Black Glass		47410600
		Matt Black/ Black Glass	Q1/2024	47410670
176	without plate	Chrome		47412000
		Brushed Bronze		47412140
		Brushed Black Chrome		47412340
		Matt Black	Q1/2024	47412670
		AXOR FinishPlus*		47412XXX

Measurements within scale drawings are in mm.
Technical specifications and units of measure are subject to change.

Plates metal

Features of all variants

/ material: metal
/ removable

117

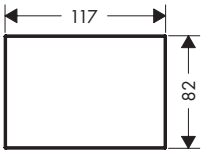

200

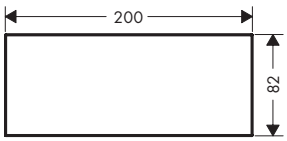

245

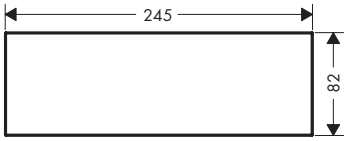

Overview variants

	Length (mm)	Finish	Available from	Code no.
	117	Chrome		47905000
		Brushed Bronze		47905140
		Brushed Black Chrome		47905340
		Matt Black	Q1/2024	47905670
		AXOR FinishPlus*		47905XXX
	200	Chrome		47903000
		Brushed Bronze		47903140
		Brushed Black Chrome		47903340
		Matt Black	Q1/2024	47903670
		AXOR FinishPlus*		47903XXX
	245	Chrome		47904000
		Brushed Bronze		47904140
		Brushed Black Chrome		47904340
		Matt Black	Q1/2024	47904670
		AXOR FinishPlus*		47904XXX

For more information about this product, please see the next page.

*AXOR FinishPlus: For further AXOR FinishPlus surfaces please see the AXOR FinishPlus overview on page 27.

Plates glass

Features of all variants

/ material: glass
/ removable

117

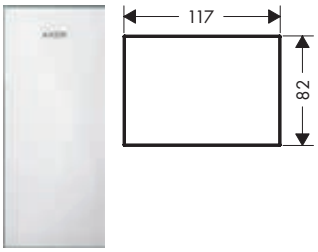

200

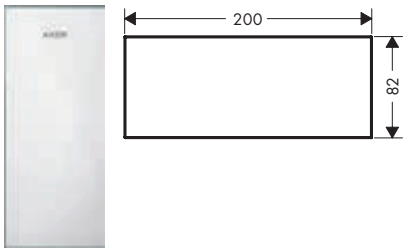

245

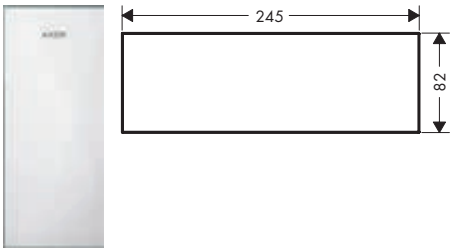

Overview variants

Length (mm)	Finish	Code no.
117	Mirror	47902000
	Black	47902600
200	Mirror	47900000
	Black	47900600
245	Mirror	47901000
	Black	47901600

Plates American Walnut

Features of all variants

/ material: walnut
/ removable
/ since wood is a natural material, each piece is unique, and wood markings may vary

117

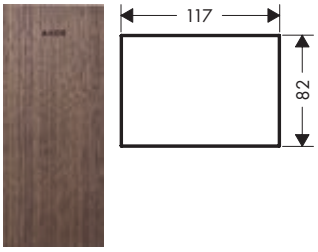

200

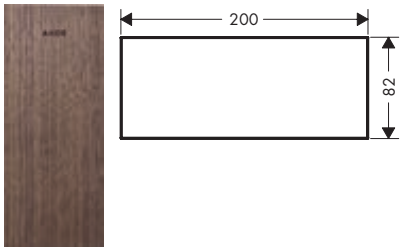

245

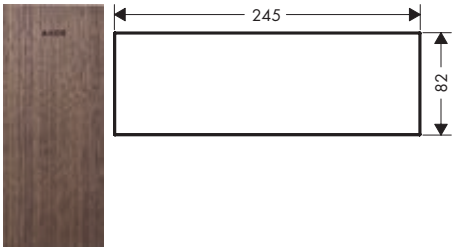

Overview variants

Length (mm)	Finish	Code no.
117	Black Walnut	47908000
200	Black Walnut	47906000
245	Black Walnut	47907000

Measurements within scale drawings are in mm.
Technical specifications and units of measure are subject to change.

Plates Marble Lasa Covelano Vena Oro

Features of all variants

/ material: marble
/ removable

/ since marble is a natural material, each piece is unique, and marbling markings may vary

117

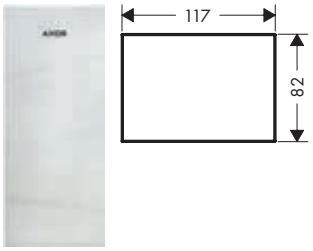

200

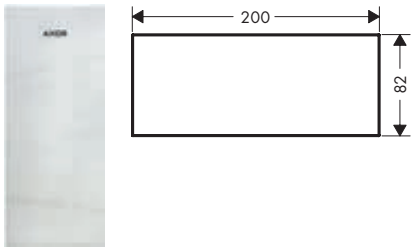

245

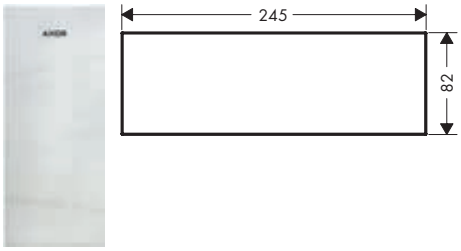

Overview variants

	Length (mm)	Finish	Code no.
	117	Marble Lasa Covelano Vena Oro	47911000
	200	Marble Lasa Covelano Vena Oro	47909000
	245	Marble Lasa Covelano Vena Oro	47910000

Plates Marble Nero Marquina

Features of all variants

/ material: marble
/ removable

/ since marble is a natural material, each piece is unique, and marbling markings may vary

117

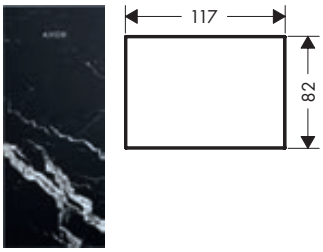

200

245

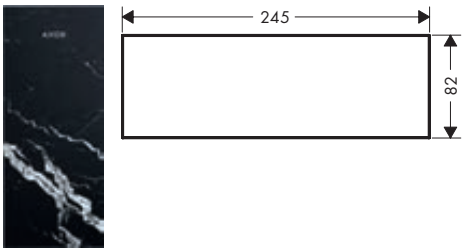

Overview variants

	Length (mm)	Finish	Code no.
	117	Marble Nero Marquina	47915000
	200	Marble Nero Marquina	47913000
	245	Marble Nero Marquina	47914000

Plates Leather

Features of all variants

/ material: leather
/ removable

117

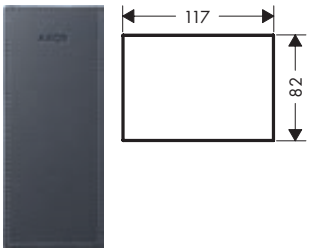

200

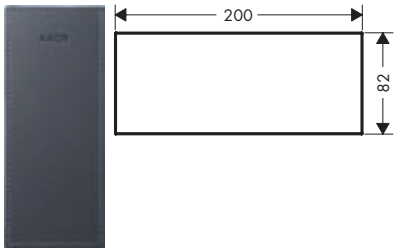

245

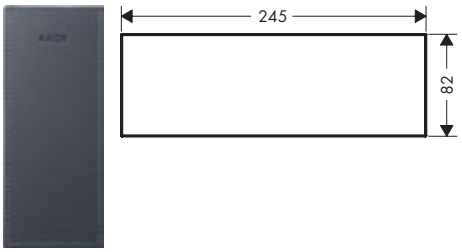

Overview variants

	Length (mm)	Finish	Code no.
	117	Leather	47918000
	200	Leather	47916000
	245	Leather	47917000

Measurements within scale drawings are in mm.
Technical specifications and units of measure are subject to change.

Mounting plates

Features of all variants

/ the mounting plate is required to attach an individual material to the AXOR MyEdition products without plate
/ material thickness: recommended 3-5 mm (individual material)
/ material: stainless steel
/ the corresponding AXOR MyEdition template is required for exact positioning of the individual material on the mounting plate
/ removable
/ with rubber seal for tight fit
/ not included: individual material, glue

117

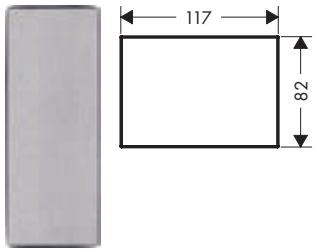

200

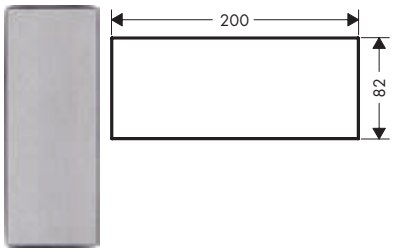

245

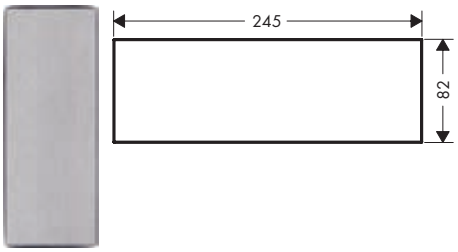

Overview variants

Length (mm)	Code no.
117	47923000
200	47921000
245	47922000

Required parts:	For	Code no.
Template 117	47923XXX	47924000
Template 200	47921XXX	47925000
Template 245	47922XXX	47926000

*AXOR FinishPlus: For further AXOR FinishPlus surfaces please see the AXOR FinishPlus overview on page 27.

Template 117

Features

/ for exact positioning during gluing of the individual material on the AXOR MyEdition
mounting plate # 47923000
/ the template can be used several times
/ not included: individual material, glue

Code no.
47924000

Template 200

Features

/ for exact positioning during gluing of the individual material on the AXOR MyEdition
mounting plate # 47921000
/ the template can be used several times
/ not included: individual material, glue

Code no.
47925000

Template 245

Features

/ for exact positioning during gluing of the individual material on the AXOR MyEdition
mounting plate # 47922000
/ the template can be used several times
/ not included: individual material, glue

Code no.
47926000

Measurements within scale drawings are in mm.
Technical specifications and units of measure are subject to change.

AXOR Starck

Basin	114
Bath	116
Shower	117

"THE IDEA WITH AXOR STARCK WAS TO MAKE A DESIGN THAT WAS DEEPLY, STRUCTURALLY RESPECTFUL OF WATER. THE FIRST THING TO BRING WATER IN HISTORY WAS THE PUMP, AND SO THE IDEA WAS TO MAKE SOMETHING AS SIMPLE AS THIS."

Philippe Starck

AXOR Starck

Minimalist bathroom design

AXOR Starck embodies the aesthetic of minimalism. The design focuses on the essential. A familiar shape, uncompromising in function, with an elemental connection to water. And therefore, an archetype: The collection is inspired by the historic hand pump used to pump water from wells.

Design: Philippe Starck

CHARACTERISTIC DESIGN FEATURE:
Rigorously cylindrical with a diagonal spout.

THE DESIGNER'S IDEA:
A minimalist statement: The basic form is derived from the historical hand pump – the first and most elementary object that made water available. Everything here has to do with the pure water and its beauty.

SPECIAL COLLECTION HIGHLIGHTS:

- Three handle variants: the classic feather handle, the modern pin handle and the ergonomic lever handle
- Mixers in various ComfortZones that can be combined with various wash basins
- AXOR Starck has been a bestseller for 25 years and is now a design classic
- Innovative baton hand shower: the first of its kind and now a classic

Learn more about AXOR Starck:
axor-design.com

Three single lever mixers – three handle variants

Three handles, one design: from the classic feather handle – the original from 1994 and a classic today – to the modern, totally streamlined pin handle and the ergonomic lever handle. The iconic, diagonal spout shape and the minimalist design underscore the focus on the essentials.

AXOR STARCK SINGLE LEVER WASH BASIN MIXER WITH LEVER HANDLE
/ Lever handle: The ergonomic lever handle represents modern minimalism
/ Available in three heights: 80, 100, 250
/ A CoolStart variant for saving energy and water is available

AXOR STARCK SINGLE LEVER WASH BASIN MIXER WITH PIN HANDLE
/ Pin handle with integrated joystick cartridge: The sophisticated handle completes the minimalist design
/ Integrated cartridge enables a slim body
/ Three simple cylinders engender the minimalist design
/ Available in four heights: 70, 90, 170, 250

AXOR STARCK SINGLE LEVER WASH BASIN MIXER WITH FEATHER HANDLE
/ Feather handle: classic form with a wink. The feather is a surprising detail within the overall minimalist look
/ Available in three heights: 60, 70, 220
/ Original design from 1994: inspired by the hand pump

For matching products please refer to the AXOR Program chapters

AXOR Showers P. 208 AXOR Accessories P. 272 AXOR Basins & bathtubs P. 322 AXOR Electronic P. 312

Single lever basin mixer 80 with lever handle for hand wash basins with pop-up waste set Finland

Features

/ consists of: single lever basin mixer, waste set
/ ComfortZone 80
/ spout height: 75 mm
/ handle variant: lever handle
/ spray type: normal spray
/ maximum flow rate at 3 bar: 5 l/min
/ ceramic cartridge
/ temperature limitation adjustable
/ suitable for continuous flow water heaters
/ pop-up waste set G 1¼
/ connection type: G ⅜ connections
/ connection dimension: DN15
/ EU taxonomy: max. 6 l/min - Substantial Contribution (SC) possible

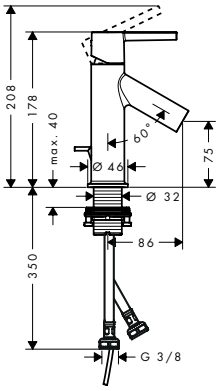

Sustainability

EcoSmart

Technologies

AirPower | Comfort Zone | Quick Clean

Finish	LVI-nro	Code no.
Chrome	6150773	12102000
AXOR FinishPlus*		12102XXX

Single lever basin mixers with pin handle

Features of all variants

/ consists of: single lever basin mixer, waste set
/ projection: 112 mm
/ handle variant: pin handle
/ spray type: normal spray
/ maximum flow rate at 3 bar: 5 l/min
/ ceramic cartridge
/ suitable for continuous flow water heaters
/ connection type: G ⅜ connections
/ connection dimension: DN15
/ EU taxonomy: max. 6 l/min - Substantial Contribution (SC) possible

90

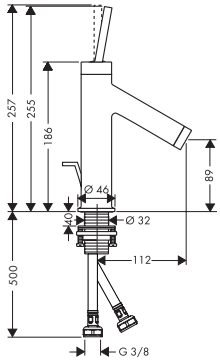

170

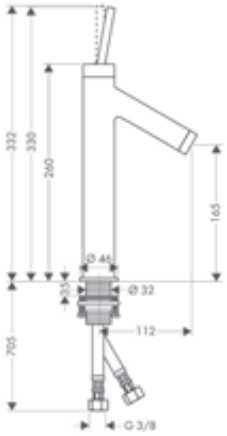

250

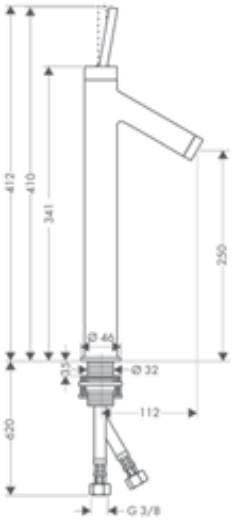

Sustainability

EcoSmart

Technologies

AirPower | Comfort Zone | Quick Clean

Overview variants

ComfortZone	Projection (mm)	Spout height (mm)	Waste set	For wash bowls	Finish	LVI-nro	Code no.
90	112	89	pop-up	–	Chrome	6150224	10111000
					AXOR FinishPlus*		10111XXX
90	112	89	non-closing	–	Chrome		10117000
					AXOR FinishPlus*		10117XXX
170	112	165	non-closing	■	Chrome	6150171	10123000
					AXOR FinishPlus*		10123XXX
250	112	250	non-closing	■	Chrome	6150360	10129000
					AXOR FinishPlus*		10129XXX

Measurements within scale drawings are in mm.
Technical specifications and units of measure are subject to change.

Single lever basin mixers with lever handle

Features of all variants

/ consists of: single lever basin mixer, waste set
/ handle variant: lever handle
/ spray type: normal spray
/ ceramic cartridge
/ temperature limitation adjustable
/ suitable for continuous flow water heaters
/ connection type: G ⅜ connections
/ connection dimension: DN15
/ EU taxonomy: max. 6 l/min - Substantial Contribution (SC) possible

100

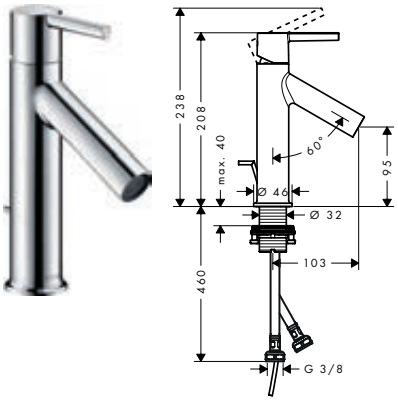

250

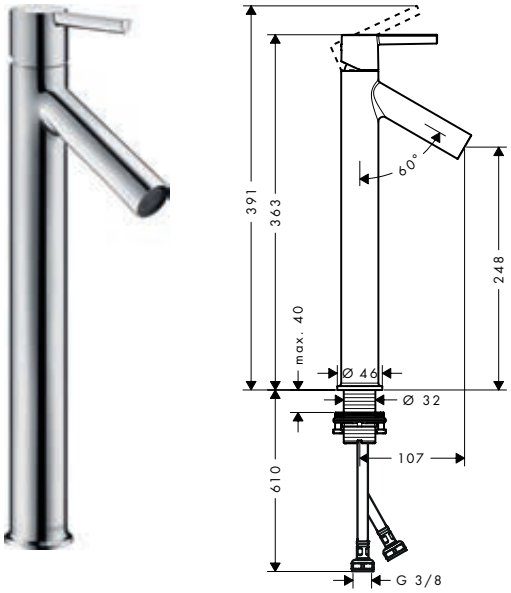

Sustainability

Technologies

Certificates/declarations

Overview variants

ComfortZone	Projection (mm)	Spout height (mm)	Waste set	CoolStart	For wash bowls	Max. flow rate at 3 bar (l/min)	Finish	Code no.
100	103	95	pop-up	■	–	3.5	Chrome	10007000
							AXOR FinishPlus*	10007XXX
100	103	95	pop-up	–	–	5	Chrome	10001000
							AXOR FinishPlus*	10001XXX
100	103	95	non-closing	–	–	5	Chrome	10003000
							AXOR FinishPlus*	10003XXX
250	107	248	non-closing	–	■	5	Chrome	10103000
							AXOR FinishPlus*	10103XXX

10003XXX This product is only available in the AXOR FinishPlus surface Brushed Red Gold via AXOR Signature.

*AXOR FinishPlus: For further AXOR FinishPlus surfaces please see the AXOR FinishPlus overview on page 27.

Single lever basin mixer 90 with bidette hand shower and shower hose 1.60 m

Features

/ consists of: single lever basin mixer, bidette hand shower, shower holder, shower hose, waste set
/ ComfortZone 90
/ projection: 112 mm
/ spout height: 89 mm
/ handle variant: pin handle
/ spray type: normal spray
/ spray type Bidette: shower spray
/ maximum flow rate at 3 bar: 5 l/min
/ ceramic cartridge
/ suitable for continuous flow water heaters
/ push-open waste set G 1¼
/ connection type: G ⅜ connections
/ connection dimension: DN15
/ EU taxonomy: max. 6 l/min - Substantial Contribution (SC) possible

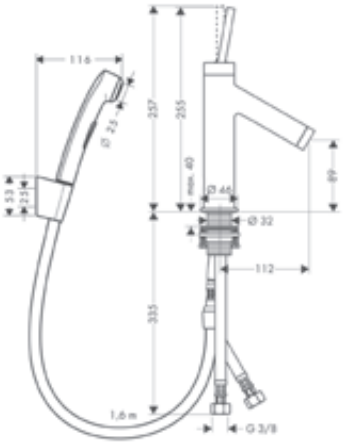

Sustainability

Technologies

AirPower | Comfort Zone | Quick Clean

Certificates/declarations

EPD

Finish	LVI-nro	Code no.
Chrome	6150272	10300000
AXOR FinishPlus*		10300XXX

This product is only available in the AXOR FinishPlus surface Polished Gold Optic via AXOR Signature.

Single lever bath mixers floor-standing

Features of all variants

/ 2 functions
/ projection: 156 mm
/ spray type mixer: normal spray
/ spray type hand shower: Rain, Mono
/ maximum flow rate at 3 bar: 18 l/min
/ flow rate for bath spout at 3 bar: 18 l/min
/ flow rate of hand shower at 3 bar: 15 l/min
/ ceramic cartridge
/ temperature limitation adjustable
/ diverter with automatic resetting
/ non-return valve
/ suitable for continous flow water heaters
/ connection dimension: DN15
/ connection type: basic set
/ deck mounted
/ min. operating pressure: 1 bar
/ max. operating pressure: 10 bar

pin handle

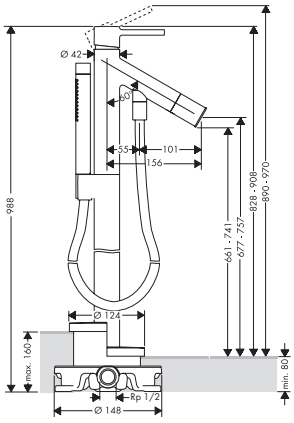

lever handle

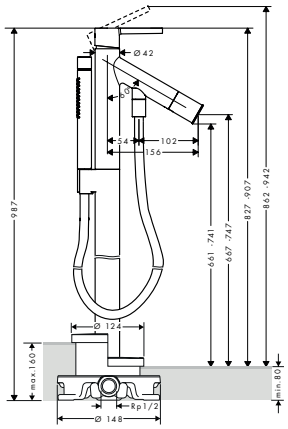

Technologies

AirPower

Spray types

Rain | Mono

Certificates/declarations

EPD

Overview variants

Projection (mm)	Handle version	Finish	LVI-nro	Code no.
156	pin	Chrome	6350732	10456000
		AXOR FinishPlus*		10456XXX
156	lever	Chrome	6350731	10455000
		Matt Black		10455670
		AXOR FinishPlus*		10455XXX

Required parts:	Code no.
Basic set for mixers floor-standing	10452180

Measurements within scale drawings are in mm.
Technical specifications and units of measure are subject to change.

Bath spout

Features

/ 1 function
/ projection: 122 mm
/ maximum flow rate at 3 bar: 20 l/min
/ connection dimension: device connection DN20
/ spray type: normal spray

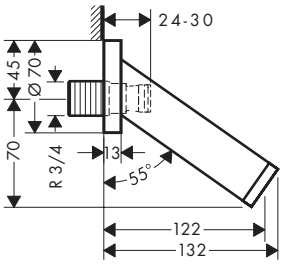

Technologies

AirPower

Finish	LVI-nro	Code no.
Chrome	6557006	10410000
AXOR FinishPlus*		10410XXX

Rim mounted bath set with hand shower

Features

/ consists of: hand shower, shower holder, shower hose, Secubox, Secuflex hose brake, hose insert
/ suitable for for installation on bath rim or tile surround (no mounting plate available)
/ connection dimension: DN15
/ drilling diameter on bath tub: Ø 50 mm
/ maximum pull-out length of hand shower 1.10 m

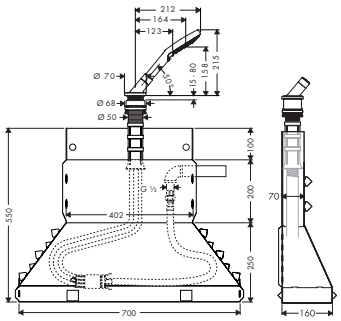

Finish	LVI-nro	Code no.
Chrome	6559379	19418000
AXOR FinishPlus*		19418XXX

Overhead shower 240 1jet

Features

/ shower head size: 240 mm
/ spray type: RainAir
/ ball-joint: overhead shower angle adjustable
/ material spray disc: metal
/ maximum flow rate at 3 bar: 19 l/min
/ flow rate RainAir spray (at 3 bar): 19 l/min
/ minimum flow pressure: 1,5 bar
/ spray disc removable for cleaning
/ installation: ceiling or wall
/ connection thread G ½
/ connection dimension: DN15
/ suitable for continous flow water heaters
/ pressure: low

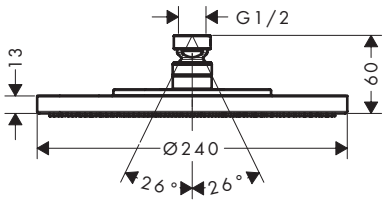

Technologies

Quick Clean
AirPower

Spray types

Rain Air

Certificates/declarations

EPD

Finish	LVI-nro	Code no.
Chrome	6559362	28494000
AXOR FinishPlus*		28494XXX

Required parts (choose one):

AXOR ShowerSolutions Shower arm 390 mm

Finish	Code no.
Chrome	26431000
AXOR FinishPlus*	26431XXX

For more information about this product, please see the next page.

*AXOR FinishPlus: For further AXOR FinishPlus surfaces please see the AXOR FinishPlus overview on page 27.

Overhead shower 240 1jet

Required parts (choose one):		Finish	Code no.
	AXOR ShowerSolutions Ceiling connector 100 mm	Chrome	26432000
		AXOR FinishPlus*	26432XXX
	AXOR ShowerSolutions Ceiling connector 300 mm	Chrome	26433000
		AXOR FinishPlus*	26433XXX

Baton hand showers 2jet, 1jet

Features of all variants

/ shower head size: 68 x 24 mm
/ minimum flow pressure: 1 bar
/ rinseable screen seal
/ connection thread G ½
/ suitable for continous flow water heaters

2 spray types

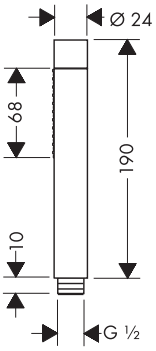

1 spray type

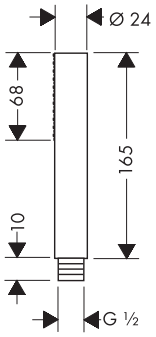

Sustainability

EcoSmart

Technologies

Quick Clean

Spray types

Rain Mono

Certificates/declarations

EPD

Overview variants

Shoulder shower size	Number of sprays	Spray types	Max. flow rate at 3 bar (l/min)	Min. flow pressure (bar)	Finish	LVI-nro	Code no.
68/24	2	Rain, Mono	14.5	1	Chrome	6555615	28532000
					Matt Black		28532670
					Matt White		28532700
					Polished Gold Optic		28532990
					AXOR FinishPlus*		28532XXX
68/24	1	Rain	8	1	Chrome	6559389	10531000
					AXOR FinishPlus*		10531XXX

Measurements within scale drawings are in mm.
Technical specifications and units of measure are subject to change.

Shower sets 2jet, 1jet

Features of all variants

/ consists of: baton hand shower, shower bar, shower hose, slider
/ shower head size: 70 mm
/ minimum flow pressure: 1 bar
/ operating pressure: min. 1 bar/max. 6 bar
/ wall mounting: screw fastening
/ wall supports made of plastic
/ profile pipe: round
/ shower bar diameter: 25 mm
/ drilling distance 915 mm
/ shower hose with cylindrical nut on both ends
/ pivot connector prevents hose from tangling

2 spray types

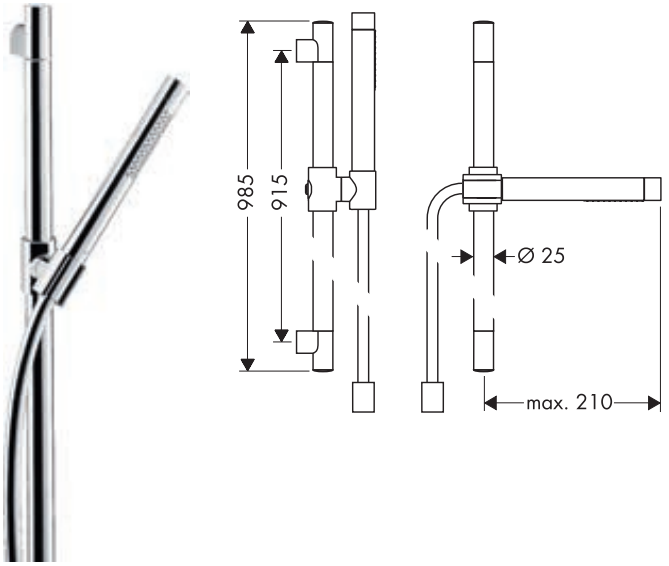

1 spray type

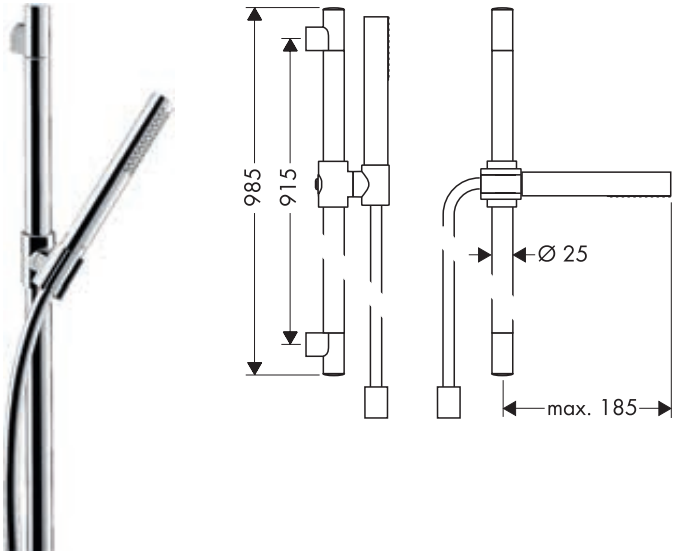

Sustainability

EcoSmart

Technologies

Quick Clean

Spray types

Rain, Mono

Overview variants

Shoulder shower size	Number of sprays	Spray types	Max. flow rate at 3 bar (l/min)	Min. flow pressure (bar)	Finish	LVI-nro	Code no.
68/24	2	Rain, Mono	14.5	1	Chrome	6559150	27980000
					AXOR FinishPlus*		27980XXX
68/24	1	Rain	8	1	Chrome	6559404	27983000
					AXOR FinishPlus*		27983XXX

Shower bar 0.90 m with shower hose 1.60 m

Features

/ consists of: shower bar, shower hose, slider
/ pipe length: 985 mm
/ shower bar diameter: 25 mm
/ profile pipe: round
/ drilling distance: 915 mm
/ metal hand shower holder
/ slider steplessly adjustable

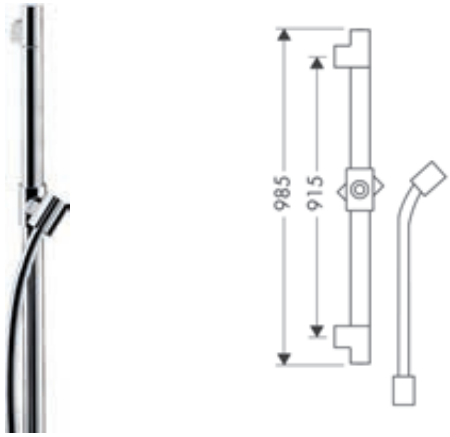

Finish	Code no.
Chrome	27830000
AXOR FinishPlus*	27830XXX

*AXOR FinishPlus: For further AXOR FinishPlus surfaces please see the AXOR FinishPlus overview on page 27.

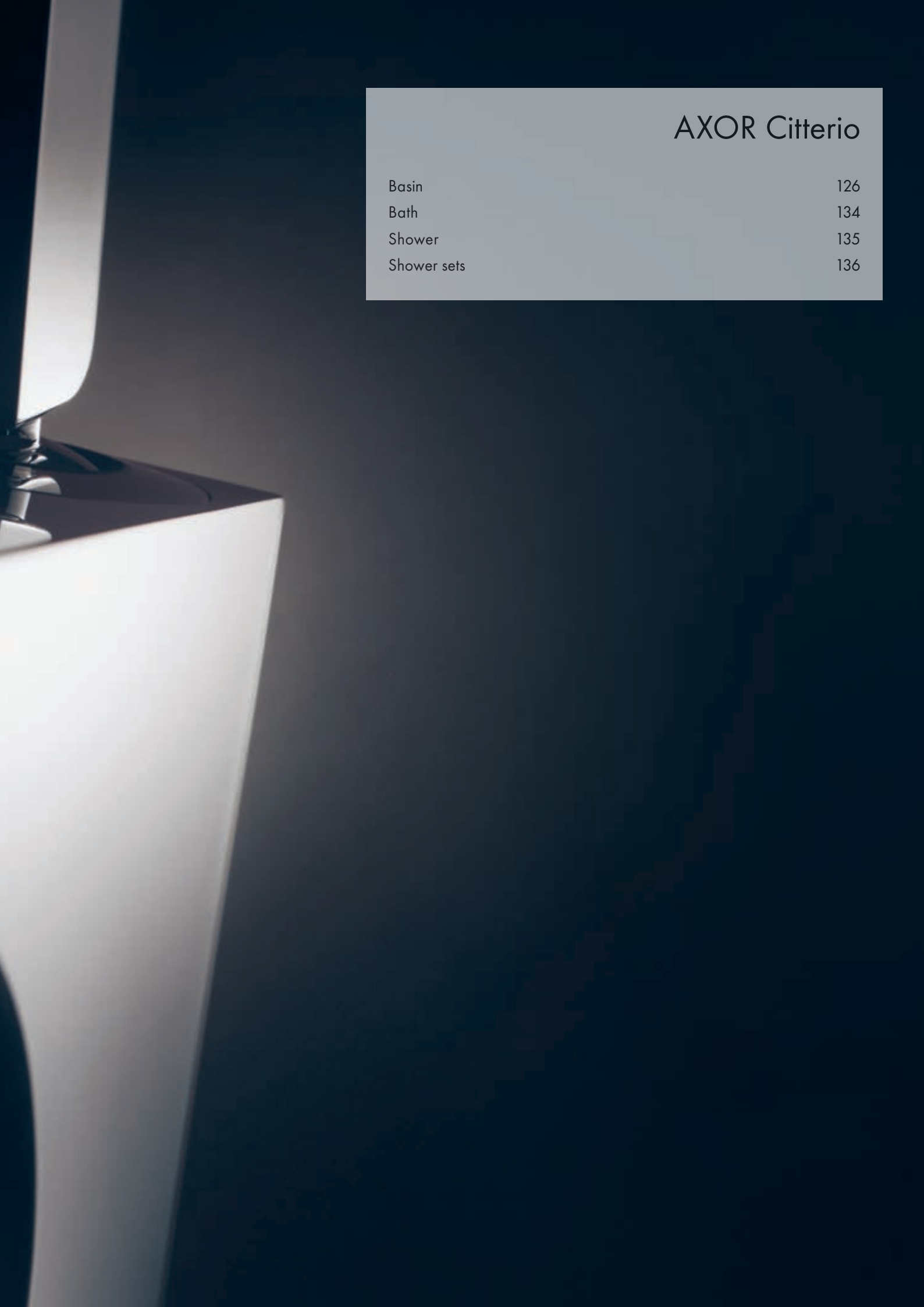

AXOR Citterio

Basin	126
Bath	134
Shower	135
Shower sets	136

AXOR Citterio

A contemporary classic

AXOR Citterio is an icon of modern bathroom design. Understated yet unmistakably luxurious, with distinctive flat surfaces that brilliantly reflect the light, AXOR Citterio celebrates the preciousness of water itself. With its balanced proportions and elegant geometries, the collection is perfectly suited to any bathroom ambiance.

Design: Antonio Citterio and Toan Nguyen

"THOSE WHO ENJOY CELEBRATING THE DAILY RITUAL OF WASHING SHOULD DO SO WITH BEAUTIFUL OBJECTS SUCH AS AXOR CITTERIO."

Antonio Citterio

CHARACTERISTIC DESIGN FEATURE:
Monumental faucet design: Geometric precision and striking, flat surfaces – from spout to handles.

THE DESIGNER'S IDEA:
Luxury at second glance: Appreciate the value of water with this special faucet and experience the element more fully.

SPECIAL COLLECTION HIGHLIGHTS:

- Various handle versions: modern pin handle, classic cross handle, original lever handle and new, floating lever handle
- Rhombic cut: The new lever handle's exclusive surface pattern is a haptic and optical experience
- The flatness of the spout is an especially striking feature of the collection
- Extensive product range with different faucet heights, installation possibilities, versions with plate or single escutcheon
- AXOR Citterio product history: 2003 collection launch, 2010 enhanced design, 2021 extension of the product portfolio. AXOR Citterio is the first of three AXOR collections designed in cooperation with Antonio Citterio. Today, AXOR Citterio is a classic in bathroom design.

Learn more about AXOR Citterio:
axor-design.com

A monument at the wash basin

The AXOR Citterio collection offers a variety of product variants: pin, cross and lever handles as well as products with cover plates and escutcheons. Various installation types and diverse spout lenghts and faucet heights cover nearly every installation situation. In its geometric precision and monumentality, AXOR Citterio conveys the spirit of Italian neoclassical architecture. The comprehensive product range for wash basin, shower and bathtub enables endless individual solutions, all within a consistent design language.

LEVER HANDLE WITH SURFACE PATTERN
The „rhombic cut" is a haptic and optical experience and exclusively available for the new lever handle

STRIKING HANDLE DESIGN
Conscious control turns every interaction with water into a celebration

MONUMENTAL DESIGN
Right angles meet rounded shapes and soft radii – characteristic of the collection's monumental design

FULLY INTEGRATED SPRAY FORMER
Emphasizes the immaculate design

ROUND ESCUTCHEONS
Exciting contrast with the angular design of the faucet body

Striking pin handle:
- / Iconic handle with modern, technological enhanced joystick cartridge
- / The striking design creates a deeper awareness and appreciation of water

New lever handle:
- / „Floating" form continues the architectonic design language
- / Even more ergonomic, intuitive and easy to use
- / Offers precise control of water temperature and volume
- / Optional available with exclusive „rhombic cut"

Classic cross handles:
- / Timeless design, proven functionality and familiar mechanical operation
- / Underscore the classic air of the three-hole mixer version and offer direct and separate control of hot and cold water
- / Available with escutcheons or plate

A variety of products with perfect form

Single lever basin mixer 190 with pin handle
and pop-up waste set in Brushed Gold Optic.

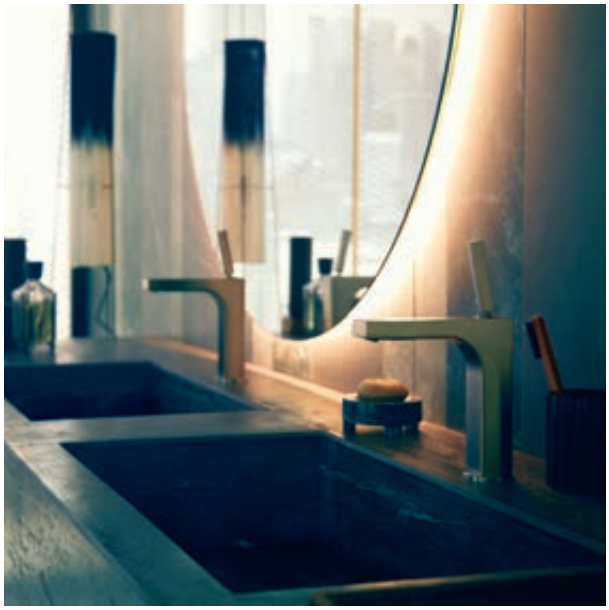

Single-hole lavatory faucet 160 with pin handle in Brushed Nickel.

Three-hole basin mixer for concealed installation,
wall-mounted, with spout 162 mm, lever handles
and escutcheons in Polished Black Chrome.

Single lever basin mixer for concealed installation,
wall-mounted, with flat lever handle, spout 220 mm
and cover plate in Polished Gold Optic.

For matching products please refer to the AXOR Program chapters

AXOR Showers P. 208
AXOR Accessories P. 272
AXOR Basins & bathtubs P. 322
AXOR Electronic P. 312

Single lever basin mixers for hand washbasins

Features of all variants

/ consists of: single lever basin mixer, waste set
/ ComfortZone 90
/ projection: 112 mm
/ spout height: 92 mm
/ handle variant: lever handle
/ spray type: laminar spray
/ swiveling spray former
/ maximum flow rate at 3 bar: 5 l/min
/ ceramic cartridge
/ suitable for continuous flow water heaters
/ pop-up waste set G 1¼
/ connection type: G ⅜ connections
/ connection dimension: DN15
/ EU taxonomy: max. 6 l/min - Substantial Contribution (SC) possible

90

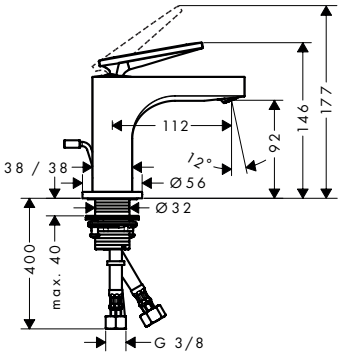

90 rhombic cut

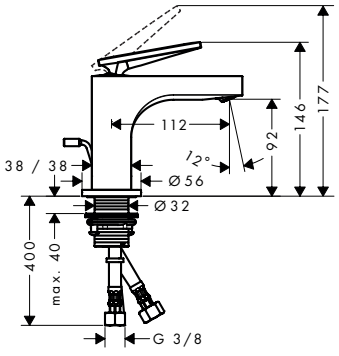

Sustainability

EcoSmart

Technologies

Comfort Zone | Quick Clean

Overview variants

ComfortZone	Projection (mm)	Spout height (mm)	Spray types	Handle version	Structure element	Finish	LVI-nro	Code no.
90	112	92	laminar spray	lever	without structure	Chrome	6150820	39022000
						AXOR FinishPlus*		39022XXX
90	112	92	laminar spray	lever	rhombic cut	Chrome	6150818	39001000
						AXOR FinishPlus*		39001XXX

Measurements within scale drawings are in mm.
Technical specifications and units of measure are subject to change.

Single lever basin mixers with pin handle

Features of all variants

/ consists of: single lever basin mixer, waste set
/ handle variant: pin handle
/ maximum flow rate at 3 bar: 5 l/min
/ ceramic cartridge
/ suitable for continuous flow water heaters
/ connection type: G ⅜ connections
/ connection dimension: DN15
/ EU taxonomy: max. 6 l/min - Substantial Contribution (SC) possible

160

280

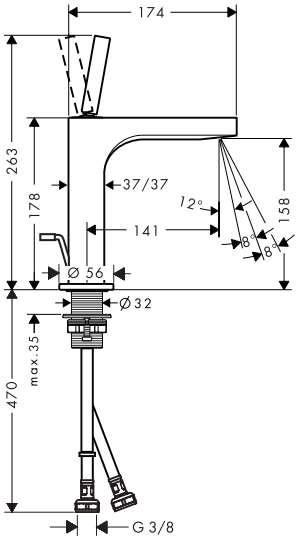

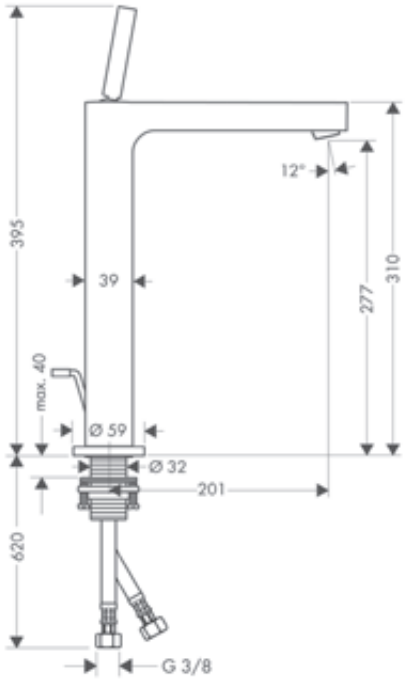

Sustainability

EcoSmart

Technologies

AirPower | Comfort Zone | Quick Clean

Overview variants

ComfortZone	Projection (mm)	Spout height (mm)	Spray types	Waste set	For wash bowls	Finish	LVI-nro	Code no.
160	141	158	laminar spray	pop-up	–	Chrome	6150602	39031000
						AXOR FinishPlus*		39031XXX
160	141	158	laminar spray	non-closing	–	Chrome		39032000
						AXOR FinishPlus*		39032XXX
280	201	277	normal spray	pop-up	■	Chrome	6150263	39020000
						AXOR FinishPlus*		39020XXX

*AXOR FinishPlus: For further AXOR FinishPlus surfaces please see the AXOR FinishPlus overview on page 27.

Single lever basin mixers with lever handle

Features of all variants

/ consists of: single lever basin mixer, waste set
/ handle variant: lever handle
/ maximum flow rate at 3 bar: 5 l/min
/ ceramic cartridge
/ suitable for continuous flow water heaters
/ connection type: G ⅜ connections
/ connection dimension: DN15
/ EU taxonomy: max. 6 l/min - Substantial Contribution (SC) possible

160

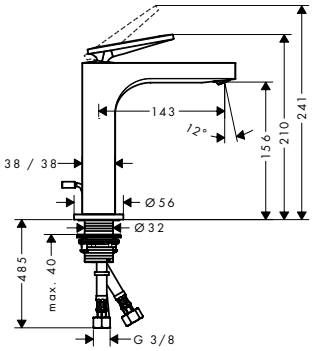

280 rhombic cut

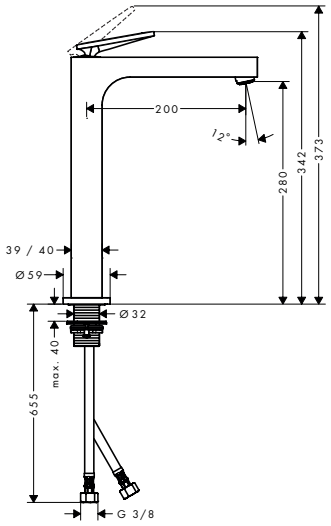

Sustainability

EcoSmart

Technologies

AirPower | Comfort Zone | Quick Clean

Overview variants

ComfortZone	Projection (mm)	Spout height (mm)	Spray types	Waste set	For wash bowls	Structure element	Finish	LVI-nro	Code no.
160	143	156	laminar spray	pop-up	–	without structure	Chrome	6150821	39023000
							AXOR FinishPlus*		39023XXX
160	143	156	laminar spray	non-closing	–	without structure	Chrome	6150822	39024000
							AXOR FinishPlus*		39024XXX
160	143	156	laminar spray	pop-up	–	rhombic cut	Chrome	6150823	39071000
							AXOR FinishPlus*		39071XXX
160	143	156	laminar spray	non-closing	–	rhombic cut	Chrome	6150824	39081000
							AXOR FinishPlus*		39081XXX
280	200	280	normal spray	non-closing	■	without structure	Chrome	6150819	39021000
							AXOR FinishPlus*		39021XXX
280	200	280	normal spray	non-closing	■	rhombic cut	Chrome	6150827	39151000
							AXOR FinishPlus*		39151XXX

Measurements within scale drawings are in mm.
Technical specifications and units of measure are subject to change.

Single lever basin mixers for concealed installation wall-mounted with plate

Features of all variants

/ consists of: single lever basin mixer for concealed installation wall-mounted, waste set
/ spray type: normal spray
/ maximum flow rate at 3 bar: 5 l/min
/ ceramic cartridge
/ suitable for continuous flow water heaters
/ non-closing waste set
/ connection type: basic set
/ connection dimension: DN15
/ handle can be positioned on the right or left, depending on the basic set installation
/ EU taxonomy: max. 6 l/min - Substantial Contribution (SC) possible

160

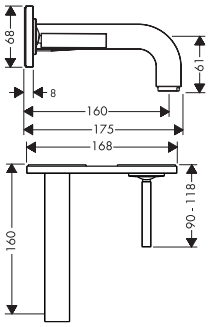

220

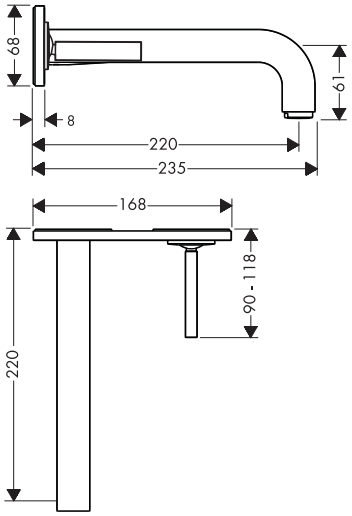

220 rhombic cut

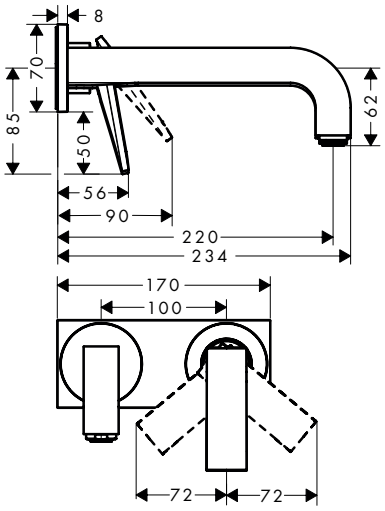

Sustainability

EcoSmart

Technologies

AirPower Quick Clean

Overview variants

Projection (mm)	Handle version	Structure element	Finish	LVI-nro	Code no.
160	pin	without structure	Chrome	6150264	39112000
			AXOR FinishPlus*		39112XXX
220	pin	without structure	Chrome	6150266	39115000
			AXOR FinishPlus*		39115XXX
220	lever	without structure	Chrome	6150825	39119000
			AXOR FinishPlus*		39119XXX
220	lever	rhombic cut	Chrome	6150828	39171000
			AXOR FinishPlus*		39171XXX

Required parts:	Code no.
Basic set for single lever basin mixer for concealed installation wall-mounted	13623180

*AXOR FinishPlus: For further AXOR FinishPlus surfaces please see the AXOR FinishPlus overview on page 27.

Single lever basin mixers for concealed installation wall-mounted with escutcheons

Features of all variants

/ consists of: single lever basin mixer for concealed installation wall-mounted, waste set
/ spray type: normal spray
/ maximum flow rate at 3 bar: 5 l/min
/ ceramic cartridge
/ suitable for continuous flow water heaters
/ non-closing waste set
/ connection type: basic set
/ connection dimension: DN15
/ handle can be positioned on the right or left, depending on the basic set installation
/ EU taxonomy: max. 6 l/min - Substantial Contribution (SC) possible

160

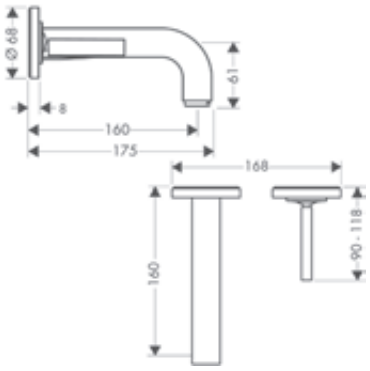

220

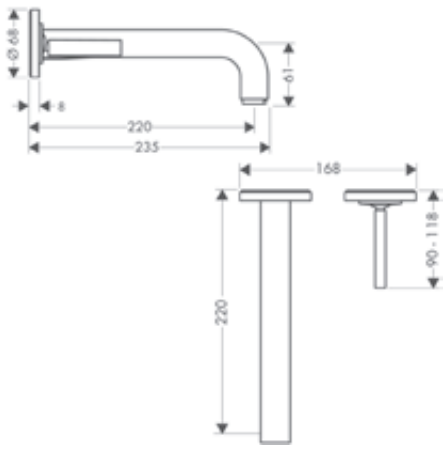

220 rhombic cut

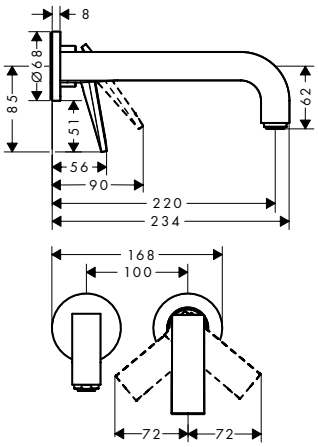

Sustainability

EcoSmart

Technologies

AirPower

Quick Clean

Overview variants

Projection (mm)	Handle version	Structure element	Finish	LVI-nro	Code no.
160	pin	without structure	Chrome	6150265	39113000
			AXOR FinishPlus*		39113XXX
220	pin	without structure	Chrome	6150267	39116000
			AXOR FinishPlus*		39116XXX
220	lever	without structure	Chrome	6150826	39121000
			AXOR FinishPlus*		39121XXX
220	lever	rhombic cut	Chrome	6150829	39181000
			AXOR FinishPlus*		39181XXX

Required parts:	Code no.
Basic set for single lever basin mixer for concealed installation wall-mounted	13623180

Measurements within scale drawings are in mm.
Technical specifications and units of measure are subject to change.

3-hole basin mixers with plate

Features of all variants

/ consists of: 3-hole basin mixer, waste set
/ ComfortZone 170
/ projection: 140 mm
/ spout height: 166 mm
/ spray type: normal spray
/ maximum flow rate at 3 bar: 5 l/min
/ suitable for continuous flow water heaters
/ pop-up waste set G 1¼
/ connection type: G ⅜ connections
/ connection dimension: DN15
/ for use only at flat, plain surfaces
/ EU taxonomy: max. 6 l/min - Substantial Contribution (SC) possible

lever handle

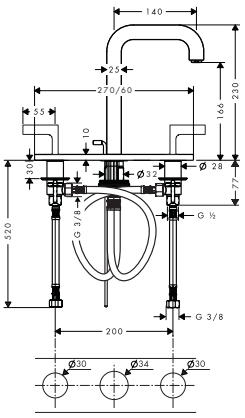

cross handle

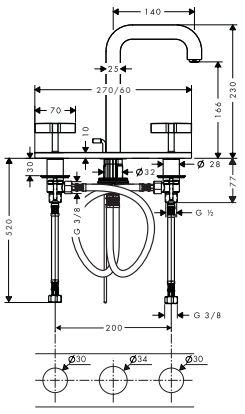

Sustainability

EcoSmart

Technologies

AirPower | Comfort Zone

Overview variants

ComfortZone	Projection (mm)	Spout height (mm)	Handle version	Finish	LVI-nro	Code no.
170	140	166	lever	Chrome	6150606	39136000
				AXOR FinishPlus*		39136XXX
170	140	166	cross	Chrome	6150604	39134000
				AXOR FinishPlus*		39134XXX

3-hole basin mixers with escutcheons

Features of all variants

/ consists of: 3-hole basin mixer, waste set
/ ComfortZone 170
/ projection: 140 mm
/ spout height: 166 mm
/ spray type: normal spray
/ maximum flow rate at 3 bar: 5 l/min
/ suitable for continuous flow water heaters
/ pop-up waste set G 1¼
/ connection type: G ⅜ connections
/ connection dimension: DN15
/ EU taxonomy: max. 6 l/min - Substantial Contribution (SC) possible

lever handle

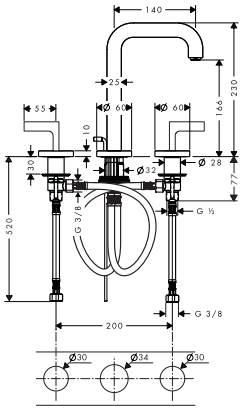

cross handle

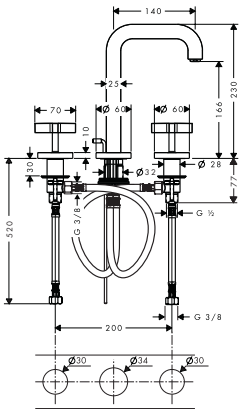

Sustainability

EcoSmart

Technologies

AirPower | Comfort Zone

Overview variants

ComfortZone	Projection (mm)	Spout height (mm)	Handle version	Finish	LVI-nro	Code no.
170	140	166	lever	Chrome	6150605	39135000
				AXOR FinishPlus*		39135XXX
170	140	166	cross	Chrome	6150603	39133000
				AXOR FinishPlus*		39133XXX

*AXOR FinishPlus: For further AXOR FinishPlus surfaces please see the AXOR FinishPlus overview on page 27.

3-hole basin mixers for concealed installation wall-mounted with plate

Features of all variants

/ consists of: 3-hole basin mixer for concealed installation wall-mounted, waste set
/ spray type: normal spray
/ maximum flow rate at 3 bar: 5 l/min
/ suitable for continuous flow water heaters
/ non-closing waste set
/ connection type: basic set
/ connection dimension: DN15
/ EU taxonomy: max. 6 l/min - Substantial Contribution (SC) possible

166

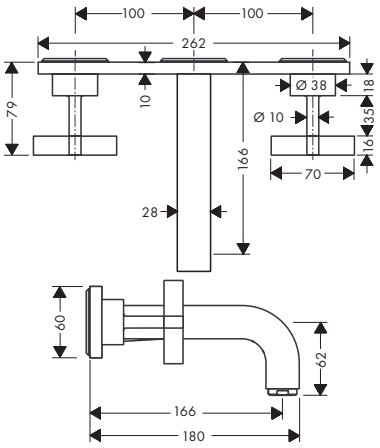

226 with lever handles

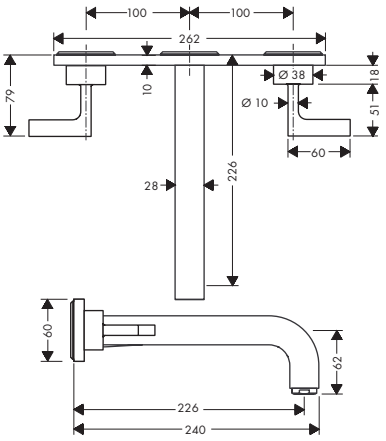

226 with cross handles

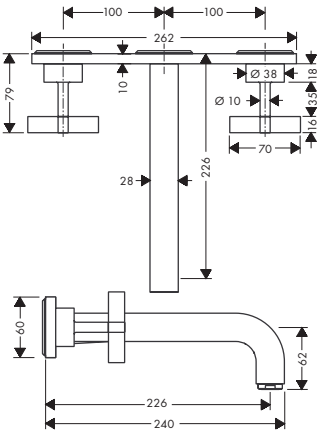

Sustainability

EcoSmart

Technologies

AirPower

Quick Clean

Overview variants

Projection (mm)	Handle version	Finish	LVI-nro	Code no.
166	cross	Chrome		39314000
		AXOR FinishPlus*		39314XXX
226	lever	Chrome	6150610	39148000
		AXOR FinishPlus*		39148XXX
226	cross	Chrome	6150608	39144000
		AXOR FinishPlus*		39144XXX

Required parts:	Code no.
Basic set for 3-hole basin mixer for concealed installation wall-mounted	10303180

Measurements within scale drawings are in mm.
Technical specifications and units of measure are subject to change.

3-hole basin mixers for concealed installation wall-mounted with escutcheons

Features of all variants

/ consists of: 3-hole basin mixer for concealed installation wall-mounted, waste set
/ spray type: normal spray
/ maximum flow rate at 3 bar: 5 l/min
/ suitable for continuous flow water heaters
/ non-closing waste set
/ connection type: basic set
/ connection dimension: DN15
/ EU taxonomy: max. 6 l/min - Substantial Contribution (SC) possible

162 with lever handles

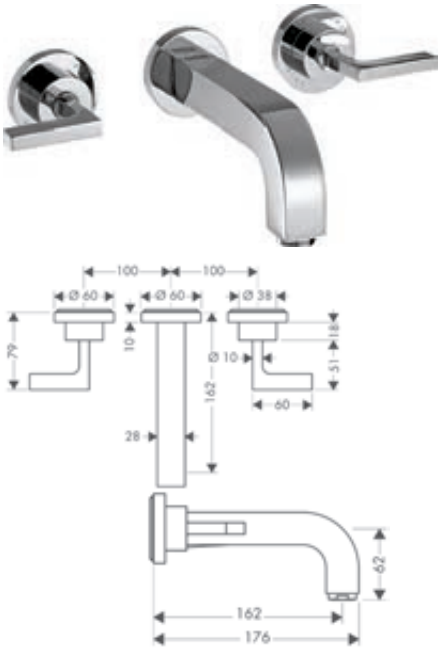

222 with lever handles

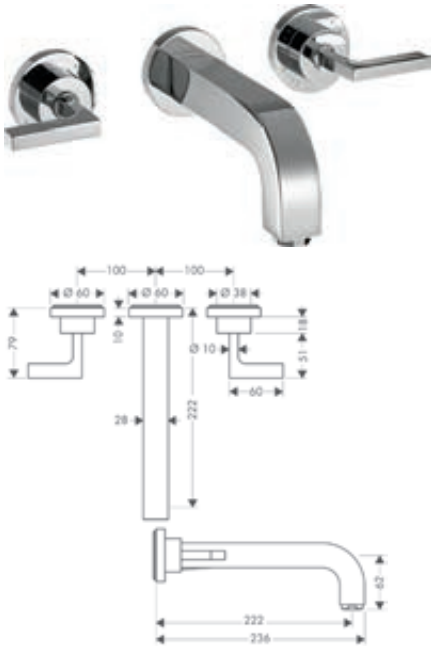

222 with cross handles

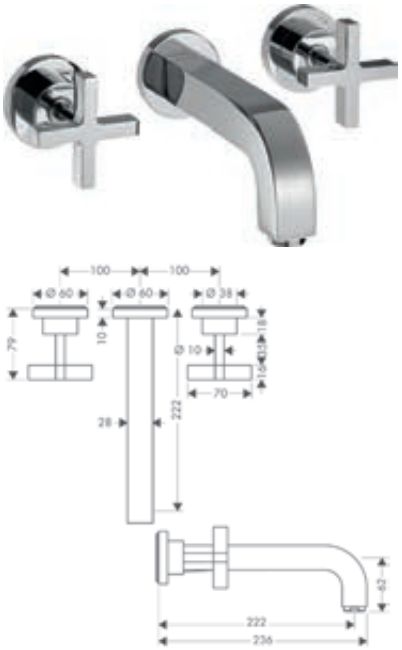

Sustainability

EcoSmart

Technologies

AirPower Quick Clean

Overview variants

Projection (mm)	Handle version	Finish	LVI-nro	Code no.
162	lever	Chrome	6150613	39315000
		AXOR FinishPlus*		39315XXX
162	cross	Chrome	6150612	39313000
		AXOR FinishPlus*		39313XXX
222	lever	Chrome	6150609	39147000
		AXOR FinishPlus*		39147XXX
222	cross	Chrome	6150607	39143000
		AXOR FinishPlus*		39143XXX

Required parts:	Code no.
Basic set for 3-hole basin mixer for concealed installation wall-mounted	10303180

*AXOR FinishPlus: For further AXOR FinishPlus surfaces please see the AXOR FinishPlus overview on page 27.

Single lever bath mixer floor-standing with pin handle

Features

/ consists of: single lever bath mixer floor standing, baton hand shower, shower hose, shower holder
/ 2 functions
/ projection: 200 mm
/ spray type mixer: normal spray
/ spray type hand shower: Rain, Mono
/ maximum flow rate at 3 bar: 22 l/min
/ flow rate for bath spout at 3 bar: 22 l/min
/ flow rate of hand shower at 3 bar: 16 l/min
/ joystick ceramic cartridge
/ diverter with automatic resetting
/ protected against backflow, according to DIN EN 1717
/ connection dimension: DN15
/ connection type: basic set
/ deck mounted
/ min. operating pressure: 1 bar
/ max. operating pressure: 10 bar

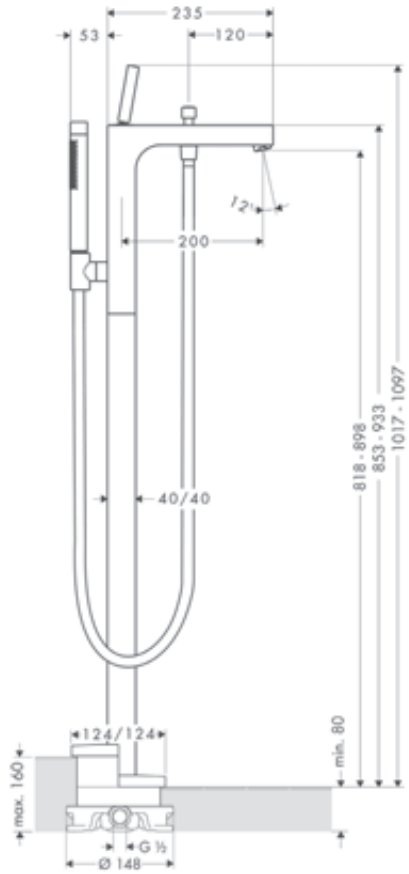

Technologies

AirPower, Quick Clean

Spray types

Rain, Mono

Finish	LVI-nro	Code no.
Chrome	6350838	39451000
AXOR FinishPlus*		39451XXX

Required parts:	Code no.
Basic set for mixers floor-standing	10452180

Bath spout

Features

/ 1 function
/ projection: 165 mm
/ maximum flow rate at 3 bar: 21 l/min
/ connection dimension: device connection DN20
/ spray type: normal spray

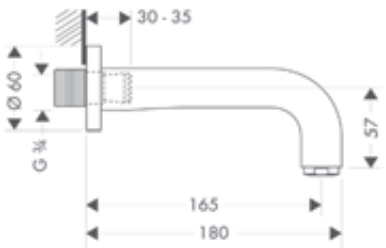

Technologies

AirPower, Quick Clean

Finish	LVI-nro	Code no.
Chrome	6557016	39410000
AXOR FinishPlus*		39410XXX

Measurements within scale drawings are in mm.
Technical specifications and units of measure are subject to change.

Rim mounted bath set with hand shower

Features

/ consists of: hand shower, shower holder, shower hose, Secubox, Secuflex hose brake, hose insert
/ suitable for for installation on bath rim or tile surround (no mounting plate available)
/ connection dimension: DN15
/ drilling diameter on bath tub: Ø 50 mm
/ maximum pull-out length of hand shower 1.10 m

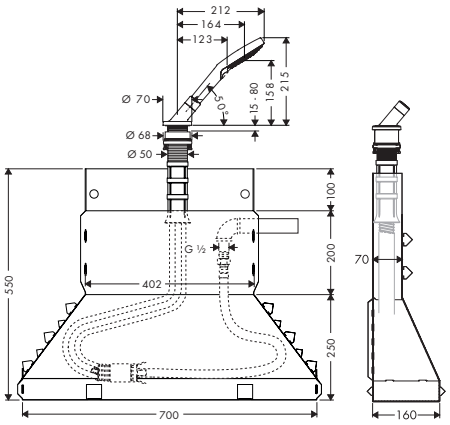

Finish	LVI-nro	Code no.
Chrome	6559379	19418000
AXOR FinishPlus*		19418XXX

Porter unit 120/120 with baton hand shower 2jet and shower hose

Features

/ consists of: porter unit, baton hand shower, shower holder, shower hose
/ shower head size: 68 x 24 mm
/ integrated support function
/ spray type: Rain, Mono
/ maximum flow rate at 3 bar: 16,2 l/min
/ minimum flow pressure: 1 bar
/ operating pressure: min. 1 bar/max. 10 bar
/ for shower hoses with conical or cylindrical nut on both sides
/ with non-return valve
/ wall mounting: screw fastening
/ rinseable screen seal
/ in a joined installation (10 mm distance), the basic set no.28486180 must be used
/ in a joined installation (10 mm distance) we recommend for perfect handling only the horizontal installation
/ in a freely-arranged installation (distance greater than 10 mm), no basic set is required

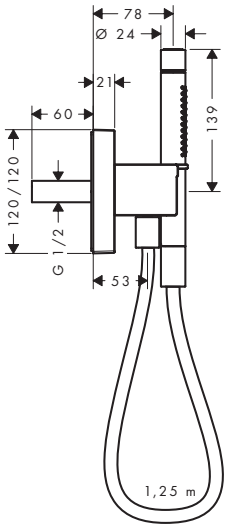

Spray types

Finish	LVI-nro	Code no.
Chrome	6559475	12626000
AXOR FinishPlus*		12626XXX

Shower holder round

Features

/ fixed holding position
/ for hose with conical nut
/ material: metal

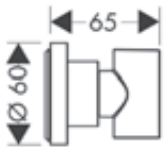

Finish	LVI-nro	Code no.
Chrome	6555616	39525000
AXOR FinishPlus*		39525XXX

*AXOR FinishPlus: For further AXOR FinishPlus surfaces please see the AXOR FinishPlus overview on page 27.

Shower set 0.90 m with hand shower 120 3jet

Features

/ consists of: hand shower, shower bar, shower hose, slider
/ shower head size: 120 mm
/ spray type: Rain, RainAir, WhirlAir
/ convenient spray selection via Select button
/ inclination angle can be adjusted by 30°
/ support for shower hose with conical nuts
/ maximum flow rate at 3 bar: 16 l/min
/ minimum flow pressure: 1 bar
/ operating pressure: min. 1 bar/max. 6 bar
/ wall mounting: screw fastening
/ wall supports of metal
/ profile pipe: round
/ shower bar diameter: 22 mm
/ drilling distance 915 mm
/ pivot connector prevents hose from tangling

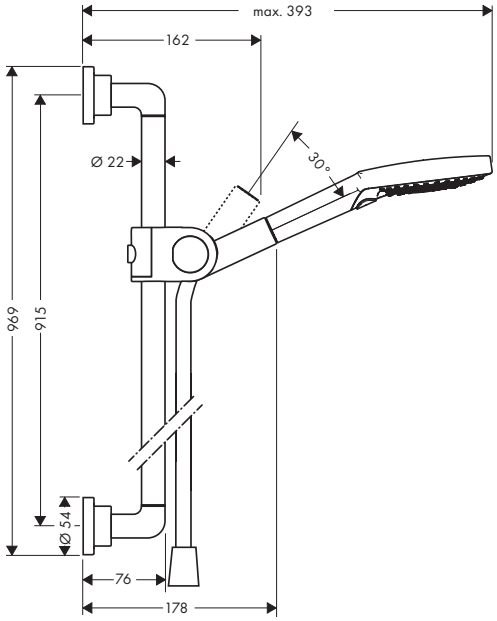

Technologies

Spray types

Finish	Code no.
Chrome	27991000
AXOR FinishPlus*	27991XXX

Shower bar 0.90 m with shower hose 1.60 m

Features

/ consists of: shower bar, shower hose, slider
/ pivot connector prevents hose from tangling
/ pipe length: 969 mm
/ shower bar diameter: 22 mm
/ profile pipe: round
/ drilling distance: 915 mm
/ metal hand shower holder
/ hand shower holder with locking mechanism
/ wall supports of metal

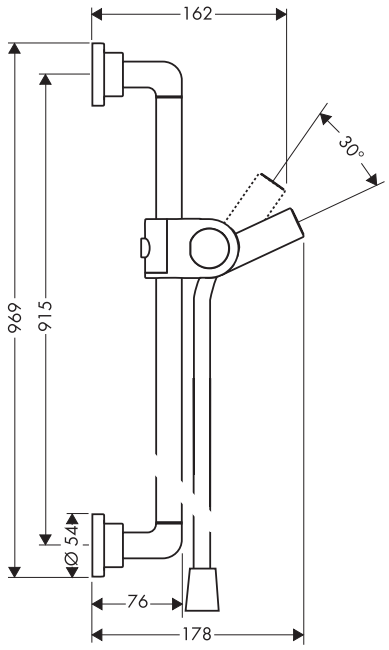

Finish	Code no.
Chrome	27831000
AXOR FinishPlus*	27831XXX

Measurements within scale drawings are in mm.
Technical specifications and units of measure are subject to change.

AXOR Citterio E

Basin	146
Bidet	149
Bath	150
Shower	150
Shower sets	154

AXOR Citterio E

The essence of elegance

AXOR Citterio E perfects the beauty of proportionality and connects curved and angular shapes, familiar and new, classic and modern, to create a timelessly elegant form. Balanced right down to the last detail. This is the E in AXOR Citterio E. Harmony is created in the balance of opposites.

Design: Antonio Citterio

"AXOR CITTERIO E IS A REDESIGN OF AN EVERYDAY OBJECTS. THESE LITTLE, BUT REFINED DETAILS ARE EXTREMELY IMPORTANT FOR PERCEPTION."

Antonio Citterio

CHARACTERISTIC DESIGN FEATURE:
Elegant, timeless design: Soft, round shapes, a tapered spout and classic cross handles that are especially ergonomic.

THE DESIGNER'S IDEA:
A symbiosis of opposites to create perfect beauty: With AXOR Citterio E we wanted to create something simple, but with high tangible and visible quality, to serve as an antidote to our complex world.

SPECIAL COLLECTION HIGHLIGHTS:

- Three handle variants: the classic cross handle, the modern pin handle and the ergonomic lever handle
- Modern functionality: pin handle, shower set with metal slider, thermostatic module with various handles for different functions and, unambiguous, ergonomic control
- Select products from the collection available in Matt Black
- AXOR Citterio E is the third collection in cooperation with Antonio Citterio

Learn more about AXOR Citterio E:
axor-design.com

A perfect symbiosis of right angles and soft, round shapes

Elegance and ease of use come together in the single-hole lavatory faucet. Precisely worked surfaces and edges are combined with gentle shapes and escutcheons in Softsquare design. Different handle variants, such as the slim joystick handle or the lever handle, are an expression of high quality.

VARIOUS HANDLE VARIANTS
/ Distinctive, modern pin handle with joystick cartridge – for ergonomic operation
/ Lever handle for easy, ergonomic control

A TAPERED SPOUT
Thoroughly planned design right down to the spout – for an elegant look

HARMONIOUS CHARACTER
Precisely developed surfaces and edges which, together with gentle curves, create a balanced look – even with very different handle variants

FULLY INTEGRATED SPRAY FORMERS
Uncompromising execution down to the spray former that underscores the intricate mixer design. Flow rate: 5 l/min (at 3 bar)

Cross handles, with their classic look, characterize the three-hole wash basin mixers. Ergonomic, with soft radii, they are easy to grip and to operate.

Elegance and functionality in the shower

The scope for individual design is almost boundless. The thermostatic module 380/120 can be installed with individual escutcheons for three functions or with a plate for two functions. In connection with the basic set based on the modular principle of the AXOR ShowerCollection, installation can be carried out for customized dimensions in rows spaced 10 mm apart. The building block system and the optional 120/120 square product grid offer more options for individuality and creativity in shower planning.

For matching products please refer to the AXOR Program chapters

AXOR Showers P. 208 AXOR Accessories P. 272 AXOR Basins & bathtubs P. 322 AXOR Electronic P. 312

Single lever basin mixers

Features of all variants

/ consists of: single lever basin mixer, waste set
/ spray type: laminar spray
/ maximum flow rate at 3 bar: 5 l/min

/ ceramic cartridge
/ suitable for continuous flow water heaters
/ connection type: G ⅜ connections

/ connection dimension: DN15
/ EU taxonomy: max. 6 l/min - Substantial Contribution (SC) possible

130

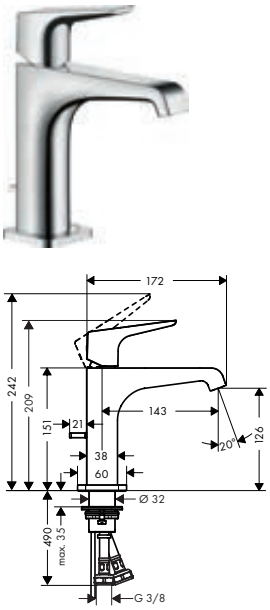

190

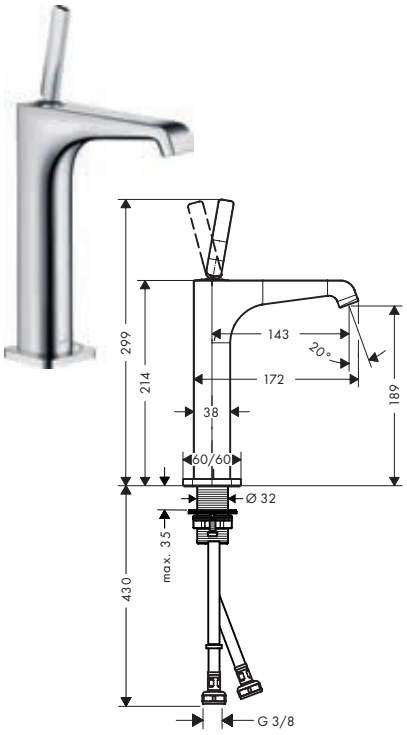

250

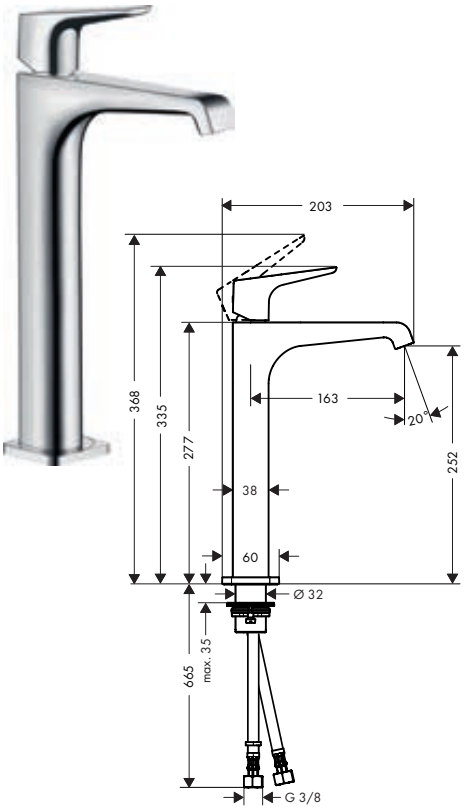

Sustainability

EcoSmart

Technologies

Comfort Zone

Certificates/declarations

EPD

Overview variants

ComfortZone	Projection (mm)	Spout height (mm)	Waste set	Handle version	For wash bowls	Finish	LVI-nro	Code no.
130	143	126	pop-up	pin	–	Chrome		36100000
						Matt Black		36100670
						AXOR FinishPlus*		36100XXX
130	143	126	non-closing	pin	–	Chrome		36101000
						Matt Black		36101670
						AXOR FinishPlus*		36101XXX
130	143	126	pop-up	lever	–	Chrome		36110000
						Matt Black		36110670
						AXOR FinishPlus*		36110XXX
130	143	126	non-closing	lever	–	Chrome		36111000
						Matt Black		36111670
						AXOR FinishPlus*		36111XXX
190	143	189	non-closing	pin	■	Chrome		36103000
						AXOR FinishPlus*		36103XXX
250	163	252	non-closing	pin	■	Chrome		36104000
						Matt Black		36104670
						AXOR FinishPlus*		36104XXX

Measurements within scale drawings are in mm.
Technical specifications and units of measure are subject to change.

Single lever basin mixers

Overview variants

ComfortZone	Projection (mm)	Spout height (mm)	Waste set	Handle version	For wash bowls	Finish	LVI-nro	Code no.
250	163	252	non-closing	lever	■	Chrome	6150499	36113000
						Matt Black		36113670
						AXOR FinishPlus*		36113XXX

Single lever basin mixers for concealed installation wall-mounted

Features of all variants

/ consists of: single lever basin mixer for concealed installation wall-mounted, waste set
/ projection: 221 mm
/ handle variant: pin handle
/ spray type: laminar spray
/ maximum flow rate at 3 bar: 5 l/min
/ ceramic cartridge
/ suitable for continuous flow water heaters
/ non-closing waste set
/ connection type: basic set
/ handle can be positioned on the right or left, depending on the basic set installation
/ EU taxonomy: max. 6 l/min - Substantial Contribution (SC) possible

with plate

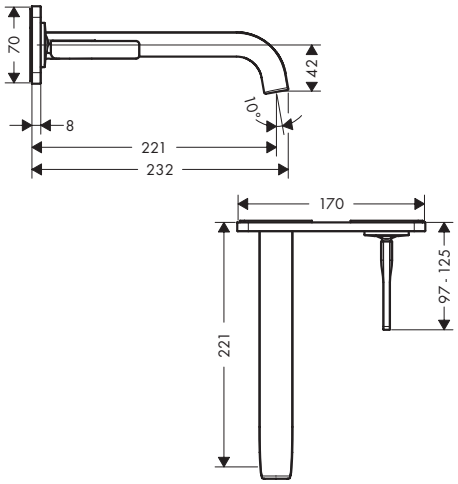

with escutcheons

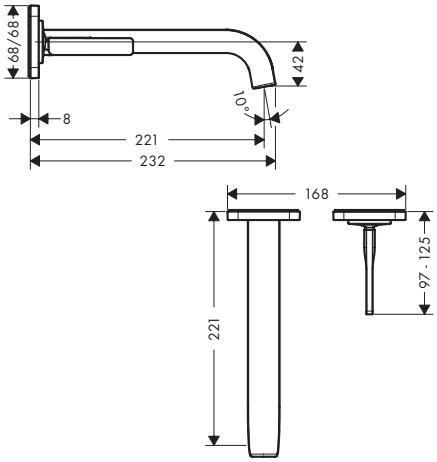

Sustainability

Certificates/declarations

Overview variants

Projection (mm)	Cover	Finish	Code no.
221	plate	Chrome	36114000
		AXOR FinishPlus*	36114XXX
221	escutcheons	Chrome	36106000
		Matt Black	36106670
		AXOR FinishPlus*	36106XXX

Required parts: Code no.

Basic set for single lever basin mixer for concealed installation wall-mounted — 13623180

*AXOR FinishPlus: For further AXOR FinishPlus surfaces please see the AXOR FinishPlus overview on page 27.

3-hole basin mixer 170 with plate and pop-up waste set

Features

/ consists of: 3-hole basin mixer, waste set
/ ComfortZone 170
/ projection: 165 mm
/ spout height: 170 mm
/ handle variant: cross handle

/ spray type: laminar spray
/ maximum flow rate at 3 bar: 5 l/min
/ ceramic valves hot/ cold 180°
/ suitable for continuous flow water heaters
/ pop-up waste set G 1¼

/ connection type: G ⅜ connections
/ connection dimension: DN15
/ for use only at flat, plain surfaces
/ EU taxonomy: max. 6 l/min - Substantial Contribution (SC) possible

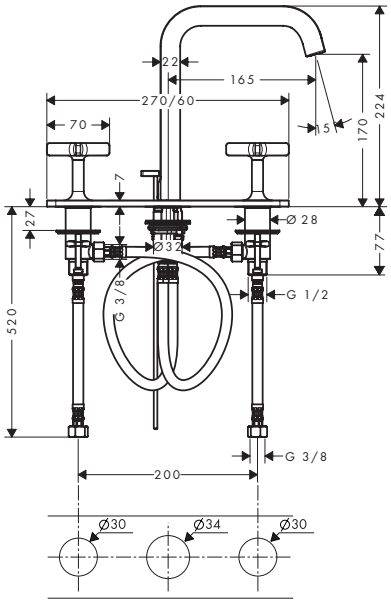

Sustainability

Technologies

Finish	LVI-nro	Code no.
Chrome	6150570	36116000
AXOR FinishPlus*		36116XXX

3-hole basin mixer 170 with escutcheons and pop-up waste set

Features

/ consists of: 3-hole basin mixer, waste set
/ ComfortZone 170
/ projection: 165 mm
/ spout height: 170 mm
/ handle variant: cross handle

/ spray type: laminar spray
/ maximum flow rate at 3 bar: 5 l/min
/ ceramic valves hot/ cold 180°
/ suitable for continuous flow water heaters
/ pop-up waste set G 1¼

/ connection type: G ⅜ connections
/ connection dimension: DN15
/ EU taxonomy: max. 6 l/min - Substantial Contribution (SC) possible

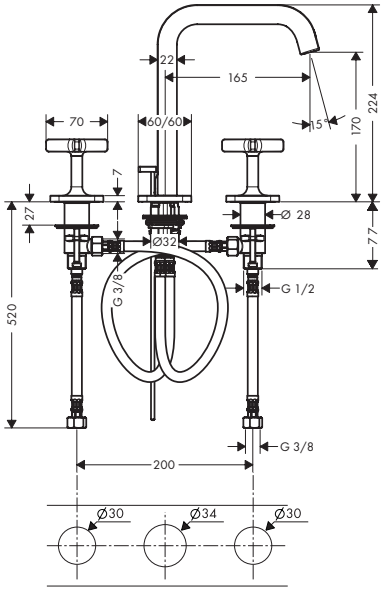

Sustainability

Technologies

Finish	LVI-nro	Code no.
Chrome	6150568	36108000
Matt Black		36108670
AXOR FinishPlus*		36108XXX

Measurements within scale drawings are in mm.
Technical specifications and units of measure are subject to change.

3-hole basin mixers wall mounted

Features of all variants

/ consists of: 3-hole basin mixer for concealed installation wall-mounted, waste set
/ projection: 220 mm
/ handle variant: cross handle
/ spray type: laminar spray
/ maximum flow rate at 3 bar: 5 l/min
/ ceramic valves hot/ cold 180°
/ suitable for continuous flow water heaters
/ non-closing waste set
/ connection type: basic set
/ connection dimension: DN15
/ EU taxonomy: max. 6 l/min - Substantial Contribution (SC) possible

with plate

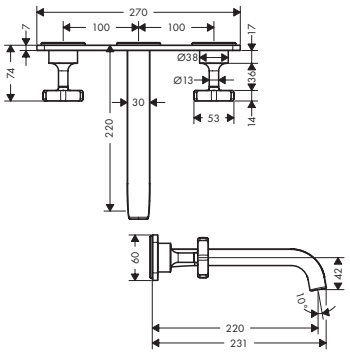

with escutcheons

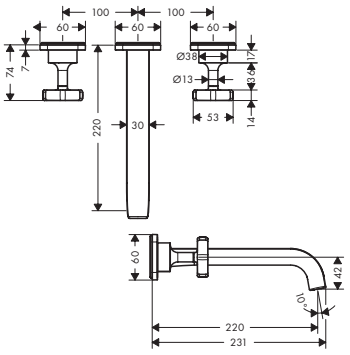

Sustainability

EcoSmart

Overview variants

Projection (mm)	Cover	Finish	LVI-nro	Code no.
220	plate	Chrome	6150569	36115000
		AXOR FinishPlus*		36115XXX
220	escutcheons	Chrome	6150567	36107000
		Matt Black		36107670
		AXOR FinishPlus*		36107XXX

Required parts:	Code no.
Basic set for 3-hole basin mixer for concealed installation wall-mounted	10303180

Single lever basin mixer 130 with bidette hand shower and shower hose 1.60 m

Features

/ consists of: single lever basin mixer, bidette hand shower, shower holder, shower hose, waste set
/ ComfortZone 130
/ projection: 143 mm
/ spout height: 126 mm
/ handle variant: pin handle
/ spray type: normal spray
/ spray type Bidette: shower spray
/ maximum flow rate at 3 bar: 5 l/min
/ ceramic cartridge
/ suitable for continuous flow water heaters
/ push-open waste set G 1¼
/ connection type: G ⅜ connections
/ connection dimension: DN15
/ EU taxonomy: max. 6 l/min - Substantial Contribution (SC) possible

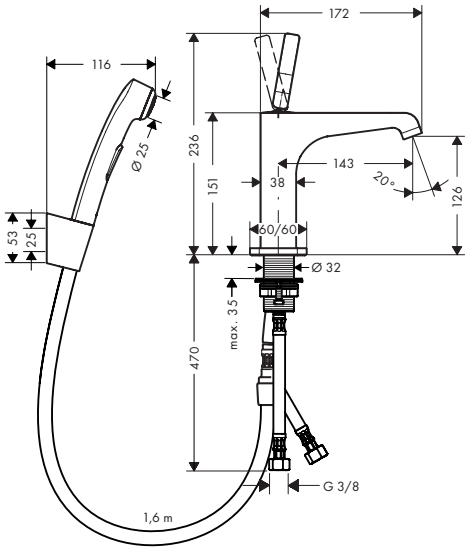

Sustainability

EcoSmart

Technologies

Comfort Zone

Certificates/declarations

EPD

Finish	LVI-nro	Code no.
Chrome	6150497	36130000
Matt Black		36130670
AXOR FinishPlus*		36130XXX

*AXOR FinishPlus: For further AXOR FinishPlus surfaces please see the AXOR FinishPlus overview on page 27.

Bath spout

Features

/ 1 function
/ connection type: G ¾
/ projection: 181 mm
/ maximum flow rate at 3 bar: 23 l/min
/ spray type: laminar spray

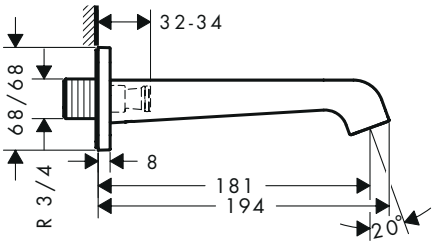

Finish	Code no.
Chrome	36425000
Matt Black	36425670
AXOR FinishPlus*	36425XXX

Rim mounted bath set with hand shower

Features

/ consists of: hand shower, shower holder, shower hose, Secubox, Secuflex hose brake, hose insert
/ suitable for for installation on bath rim or tile surround (no mounting plate available)
/ connection dimension: DN15
/ drilling diameter on bath tub: Ø 50 mm
/ maximum pull-out length of hand shower 1.10 m

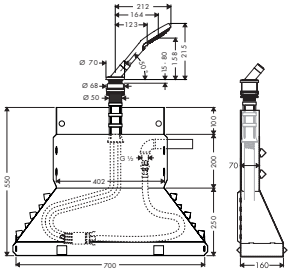

Finish	LVI-nro	Code no.
Chrome	6559379	19418000
AXOR FinishPlus*		19418XXX

Thermostatic module 380/120 for concealed installation for 2 functions with plate

Features

/ 2 functions
/ simultaneous utilization of 2 functions
/ thermostat cartridge
/ maximum flow rate at 3 bar: 42 l/min
/ flow rate upper outlet: 42 l/min
/ flow rate lower outlet: 40 l/min
/ combination of highflow thermostat with shut-off valve and Duo diverter valve for controlling 2 consumers
/ Safety stop at 40 °C
/ temperature limitation adjustable
/ connection dimension: DN20
/ connection type: basic set

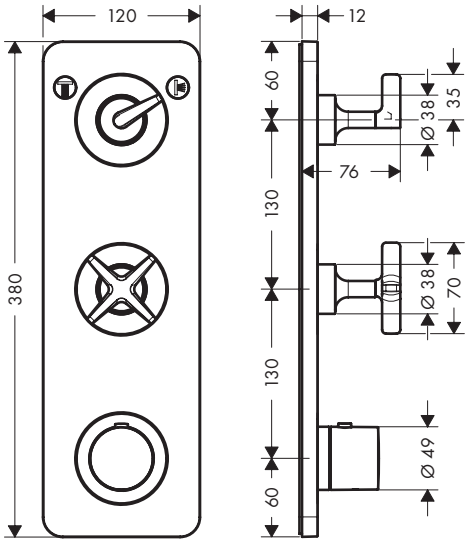

Sustainability

Water Flow Control

Technologies

Safety Stop 40°C
Thermostat

Certificates/declarations

EPD

Finish	Code no.
Chrome	36703000
Matt Black	36703670
AXOR FinishPlus*	36703XXX

Required parts:	Code no.
AXOR Citterio E Basic set for thermostatic module 380/120 for concealed installation for 2 functions	36701180

Measurements within scale drawings are in mm.
Technical specifications and units of measure are subject to change.

Thermostatic module 380/120 for concealed installation for 3 functions with escutcheons

Features

/ consists of: shower thermostat, shut-off/ diverter valve, shut-off valve
/ 3 functions
/ simultaneous utilization of 2 functions
/ thermostat cartridge
/ maximum flow rate at 3 bar: 42 l/min
/ flow rate lower outlet: 37,9 l/min
/ Flow rate left and right: 37,9 l/min
/ combination of highflow thermostat with shut-off valve and Quattro diverter valve for controlling 3 consumers
/ Safety stop at 40 °C
/ temperature limitation adjustable
/ connection dimension: DN20
/ connection type: basic set

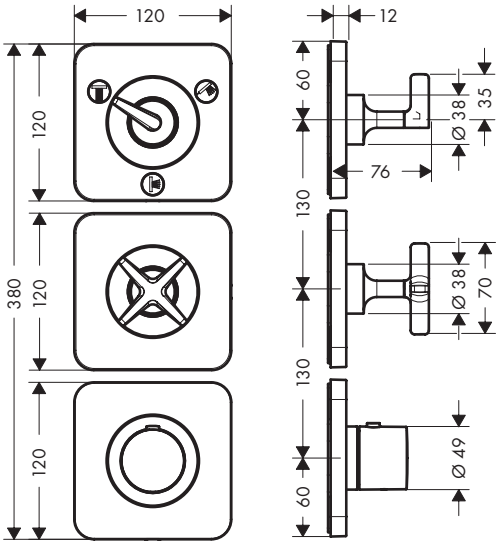

Sustainability

Water Flow Control

Technologies

Safety Stop 40°C | Thermostat

Certificates/declarations

EPD

Finish	Code no.
Chrome	36704000
Matt Black	36704670
AXOR FinishPlus*	36704XXX

Required parts: Code no.

AXOR Citterio E Basic set for thermostatic module 380/120 for concealed installation for 3 functions — 36708180

Thermostat 120/120 for concealed installation

Features

/ thermostat cartridge
/ maximum flow rate at 3 bar: 59 l/min
/ min. operating pressure: 1,5 bar
/ max. operating pressure: 10 bar
/ Safety stop at 40 °C
/ temperature limitation adjustable
/ non-return valve
/ connection dimension: DN20
/ connection type: basic set

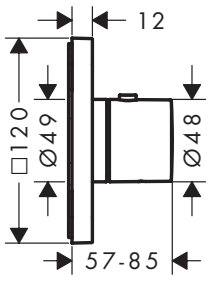

Technologies

Safety Stop 40°C | Thermostat

Finish	Code no.
Chrome	36702000
Matt Black	36702670
AXOR FinishPlus*	36702XXX

Required parts: Code no.

AXOR ShowerSolutions Basic set for thermostatic module 120/120 for concealed installation — 10754180

*AXOR FinishPlus: For further AXOR FinishPlus surfaces please see the AXOR FinishPlus overview on page 27.

Shut-off valve 120/120 for concealed installation

Features

/ connection type: basic set
/ in a freely arranged installation, basic sets no.16973180, no.16974180 or no.16970180 can also be used
/ in a joined installation (10 mm distance) with no.36703000 or no.36704000, the basic set no.10971180 must be used
/ in a joined installation (10 mm distance) with no.36702000 and no.36772000, the thermostat module finish set for 3 consumers with 3 escutcheons 12x12 no.36704000 and the basic set no.36708180 must be used

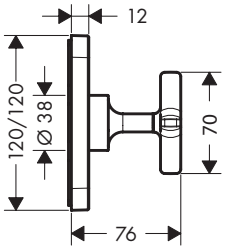

Finish	Code no.
Chrome	36771000
Matt Black	36771670
AXOR FinishPlus*	36771XXX

Required parts (choose one):	Code no.
AXOR ShowerSolutions Basic set for shut-off valve 120/120 for concealed installation	10971180

Shut-off/ diverter valve Trio/ Quattro 120/120 for concealed installation

Features

/ 3 consumers: in a joined installation (10 mm distance) with no.36702000 and no.36771000, please use the thermostat module finish set for 3 consumers with 3 escutcheons 12x12 no.36704000 and the basic set no.36708180
/ 3 consumers: in a freely-arranged installation (distance greater than 10 mm), the basic set no.15930180 must be used
/ 2 consumers: in a joined installation (10 mm distance) with no.36702000, the basic set no.36770180 must be used
/ 2 consumers: in a freely-arranged installation (distance greater than 10 mm), the basic set no.15981180 must be used
/ 3 functions
/ simultaneous utilization of 2 functions
/ connection dimension: DN15

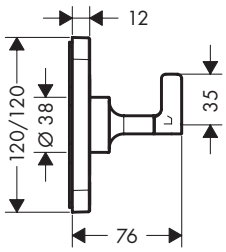

Finish	Code no.
Chrome	36772000
Matt Black	36772670
AXOR FinishPlus*	36772XXX

Required parts (choose one):	Code no.
AXOR Citterio E Basic set for shut-off/ diverter valve Trio 120/120 for concealed installation	36770180

Measurements within scale drawings are in mm.
Technical specifications and units of measure are subject to change.

Shower module 120/120 for concealed installation softsquare

Features

/ shower head size: 120 mm
/ spray type: Rain
/ spray angle adjustable in five steps
/ field of application: functions as overhead, shoulder or side shower
/ maximum flow rate at 3 bar: 5,3 l/min
/ flow rate Rain spray (at 3 bar): 5,3 l/min
/ minimum flow pressure: 1 bar
/ operating pressure: min. 1 bar/max. 6 bar
/ connection thread: G ½
/ in a joined installation (10 mm distance) the use of basic set no.28486180 is recommended
/ in a freely arranged installation, connection via a G ½ connecting thread is possible
/ if installed as an overhead shower with several joint modules, the use of installation aid no.28470180 is recommended
/ suitable for continous flow water heaters
/ connection dimension: DN15
/ material: metal
/ EU taxonomy: max. 6 l/min - Substantial Contribution (SC) possible

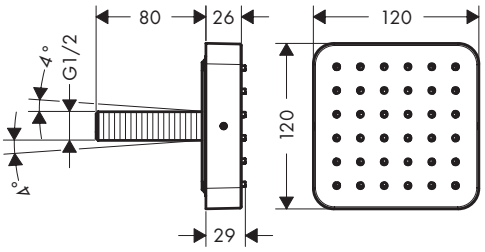

Sustainability

Eco Smart+

Technologies

Quick Clean

Spray types

Rain

Finish	Code no.
Chrome	36822000
AXOR FinishPlus*	36822XXX

Porter unit 120/120 softsquare

Features

/ integrated support function
/ metal connection angle
/ non-return valve
/ connection type: G ½
/ for shower hoses with a conical nut
/ in a joined installation (10 mm distance) we recommend for perfect handling only the horizontal installation
/ in a joined installation (10 mm distance), the basic set no.28486180 must be used
/ in a freely-arranged installation (distance greater than 10 mm), no basic set is required

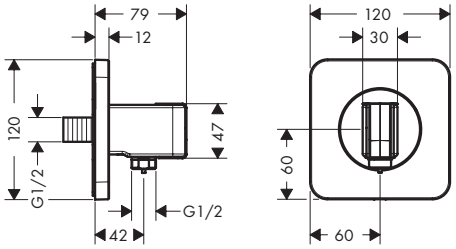

Finish	Code no.
Chrome	36724000
Matt Black	36724670
AXOR FinishPlus*	36724XXX

*AXOR FinishPlus: For further AXOR FinishPlus surfaces please see the AXOR FinishPlus overview on page 27.

Shower set 0.90 m with hand shower 120 3jet

Features

/ consists of: hand shower, shower bar, shower hose, slider
/ shower head size: 120 mm
/ spray type: Rain, RainAir, WhirlAir
/ convenient spray selection via Select button
/ maximum flow rate at 3 bar: 15 l/min
/ minimum flow pressure: 1 bar
/ operating pressure: min. 1 bar/max. 6 bar
/ wall mounting: screw fastening
/ wall supports of metal
/ bar width: 30 mm
/ drilling distance 915 mm
/ pivot connector prevents hose from tangling

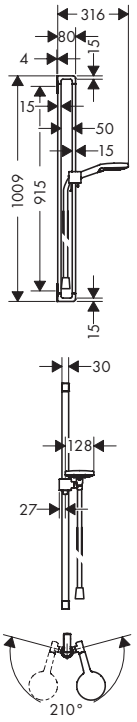

Technologies

Spray types

Finish	Code no.
Chrome	36735000
AXOR FinishPlus*	36735XXX

Shower bar 0.90 m with shower hose 1.60 m

Features

/ consists of: shower bar, shower hose, slider
/ pivot connector prevents hose from tangling
/ support for shower hose with conical nuts
/ hand shower holder moves sideways,up/down and pivots
/ bar width: 30 mm
/ profile pipe: square
/ drilling distance: 915 mm
/ metal hand shower holder
/ slider steplessly adjustable
/ silent inclination angle adjustment
/ wall supports of metal

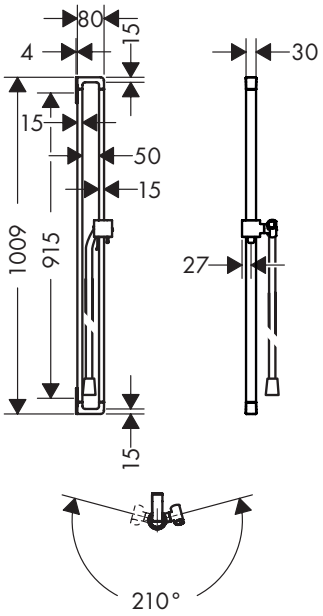

Finish	Code no.
Chrome	36736000
AXOR FinishPlus*	36736XXX

Measurements within scale drawings are in mm.
Technical specifications and units of measure are subject to change.

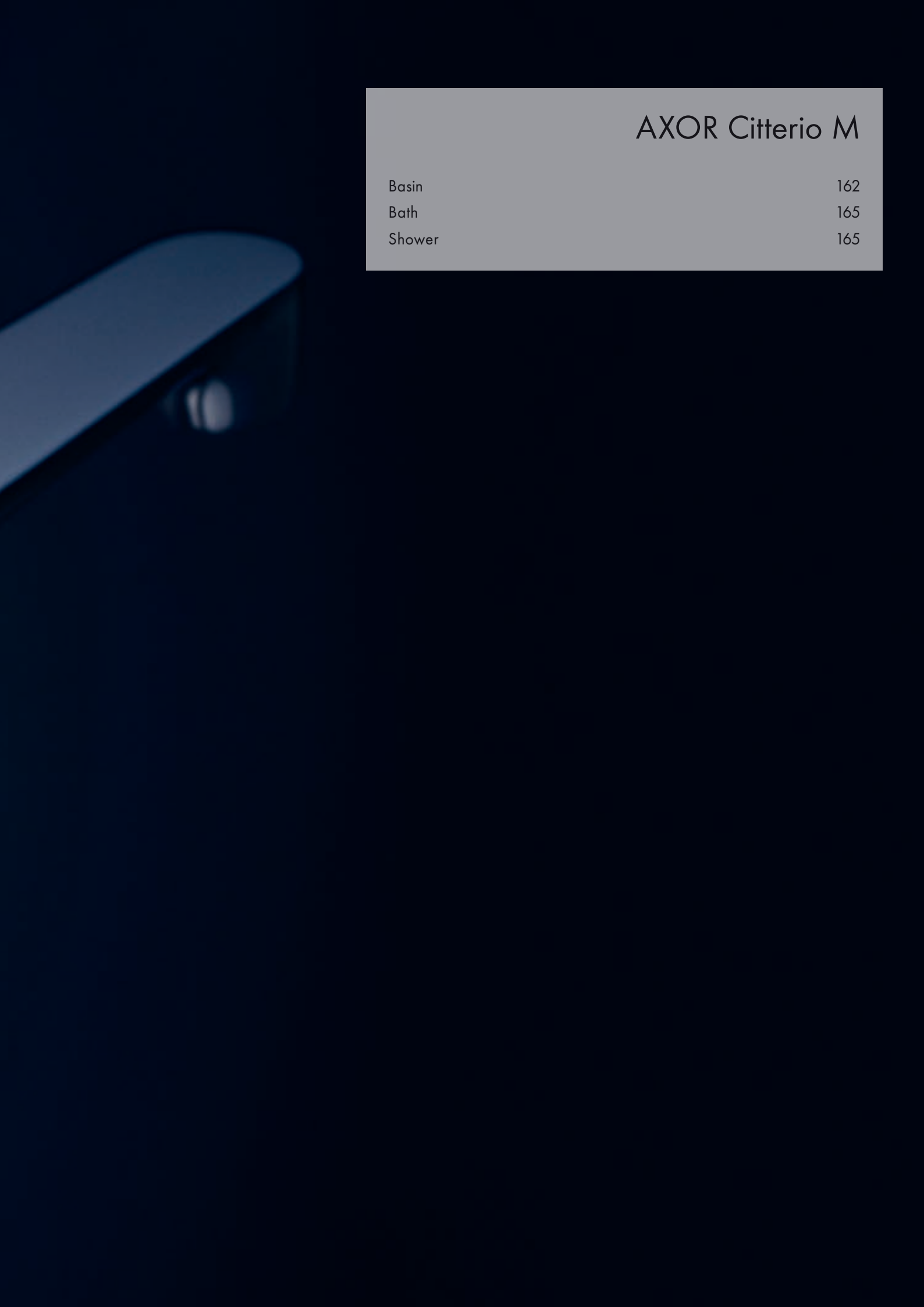

AXOR Citterio M

Basin 162
Bath 165
Shower 165

"IF I HAVE ONLY A SMALL SPACE AVAILABLE, IT IS EVEN MORE IMPORTANT THAT I FURNISH IT WITH CAREFULLY SELECTED, VALUABLE OBJECTS – SUCH AS AXOR CITTERIO M."

Antonio Citterio

AXOR Citterio M

Urban lifestyle

M as in metropolis. AXOR Citterio M stands for cultivated, urban living. With simple, slim forms and clearly defined lines, the collection is an expression of modern, urban elegance. With a quiet and understated presence in the bathroom. A masterpiece, offering an everyday retreat from the frenetic pace of the city.

Design: Antonio Citterio and Toan Nguyen

CHARACTERISTIC DESIGN FEATURE:
Clear, svelte, quiet and understated: characteristically slim, simple, cylindrical forms and elegant surfaces

THE DESIGNER'S IDEA:
A symbol for urbanization: AXOR Citterio M is a collection that meets the demands of modern, urban life. All with modern elegance and slender forms

SPECIAL COLLECTION HIGHLIGHTS:

- Variants: single lever, two-hole and three-hole mixers
- Clear, easy operation with flat lever handles
- Timeless urban design: space-saving wall-mounted mixers, understated elements for the bathroom
- Perfect form: the first AXOR mixer with a fully integrated spray former
- AXOR Citterio M, the second collection in cooperation with Antonio Citterio, was introduced in 2008

Learn more about AXOR Citterio M:
axor-design.com

Delicate and understated design for the modern metropolis

AXOR Citterio M – a bathroom collection inspired by modern city life. M as in modernity. Metropolis. Milan. With characteristically slim forms, the overall impression is particularly elegant and a nod to Italian design. The collection fits easily and seamlessly into a variety of bathroom furnishings and lifestyles. The slim, single lever mixer with a flat handle and striking spout is both modern and timeless. Combinations are possible with wash basins of nearly any form with this extraordinary classic and elegant design.

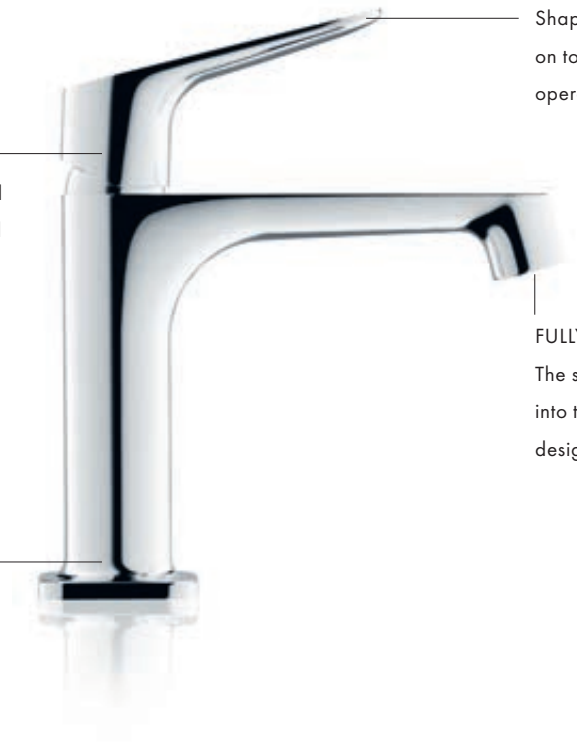

ERGONOMIC HANDLE
Shaped like half of a river pebble – flat on top, round on the bottom – handle operation is as sensitive as a caress

REFINED DESIGN
The cartridge was specially developed to make possible the slender body and the intricate, but understated design

FULLY INTEGRATED SPRAY FORMER
The spray former, fully integrated into the spout, makes the product design even more svelte and refined

ONE CAST PART
The escutcheon and body are made from one cast part, so they are especially easy to clean

Classic in function, modern in design:
The mixer comes to life in the tension between its traditional three-hole arrangement and the clear, uncomplicated form.

Urban chic in all of its rich variations: With its various design versions, the concealed, wall-mounted mixer offers a modern, space-saving solution.

For matching products please refer to the AXOR Program chapters

AXOR Showers P. 208 AXOR Accessories P. 272 AXOR Basins & bathtubs P. 322 AXOR Electronic P. 312

Single lever basin mixers

Features of all variants

/ consists of: single lever basin mixer, waste set
/ handle variant: lever handle
/ maximum flow rate at 3 bar: 5 l/min
/ ceramic cartridge
/ temperature limitation adjustable
/ suitable for continuous flow water heaters
/ connection type: G ⅜ connections
/ connection dimension: DN15
/ EU taxonomy: max. 6 l/min - Substantial Contribution (SC) possible

100

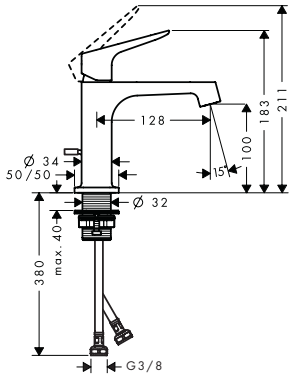

250

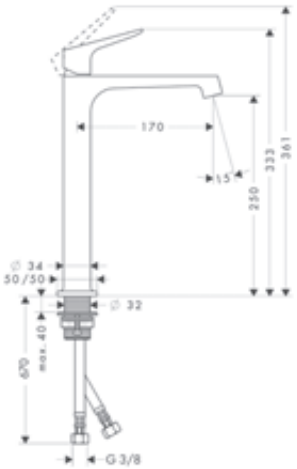

Sustainability

EcoSmart

Technologies

AirPower
Comfort Zone

Certificates/declarations

EPD

Overview variants

ComfortZone	Projection (mm)	Spout height (mm)	Waste set	For wash bowls	Finish	LVI-nro	Code no.
100	128	100	pop-up		Chrome	6150786	34013000
					AXOR FinishPlus*		34013XXX
100	128	100	non-closing		Chrome	6150787	34018000
					AXOR FinishPlus*		34018XXX
250	170	250	non-closing	■	Chrome		34127000
					AXOR FinishPlus*		34127XXX

Single lever basin mixers for concealed installation wall-mounted with plate

Features of all variants

/ consists of: single lever basin mixer for concealed installation wall-mounted, waste set
/ handle variant: lever handle
/ spray type: normal spray
/ maximum flow rate at 3 bar: 5 l/min
/ ceramic cartridge
/ temperature limitation adjustable
/ suitable for continuous flow water heaters
/ non-closing waste set
/ connection type: basic set
/ connection dimension: DN15
/ handle can be positioned on the right or left, depending on the basic set installation
/ EU taxonomy: max. 6 l/min - Substantial Contribution (SC) possible

167

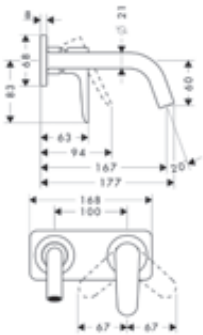

227

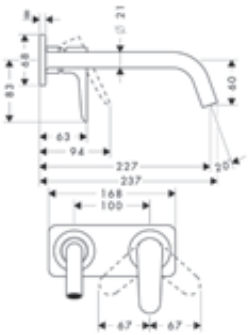

Sustainability

EcoSmart

Technologies

AirPower

Overview variants

Projection (mm)	Finish	LVI-nro	Code no.
167	Chrome	6150242	34112000
	AXOR FinishPlus*		34112XXX
227	Chrome	6150244	34115000
	AXOR FinishPlus*		34115XXX

Measurements within scale drawings are in mm.
Technical specifications and units of measure are subject to change.

Single lever basin mixers for concealed installation wall-mounted with plate

Required parts:	Code no.
Basic set for single lever basin mixer for concealed installation wall-mounted	13623180

Single lever basin mixers for concealed installation wall-mounted with escutcheons

Features of all variants

/ consists of: single lever basin mixer for concealed installation wall-mounted, waste set
/ handle variant: lever handle
/ spray type: normal spray
/ maximum flow rate at 3 bar: 5 l/min
/ ceramic cartridge
/ temperature limitation adjustable
/ suitable for continuous flow water heaters
/ non-closing waste set
/ connection type: basic set
/ connection dimension: DN15
/ handle can be positioned on the right or left, depending on the basic set installation
/ EU taxonomy: max. 6 l/min - Substantial Contribution (SC) possible

167

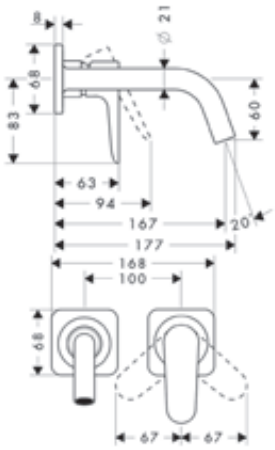

227

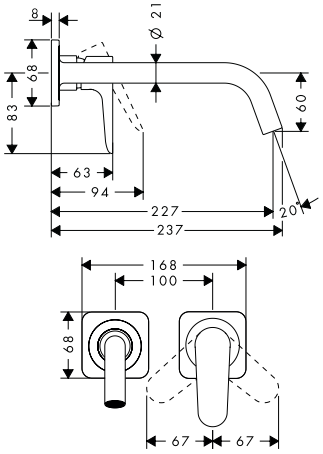

Sustainability

EcoSmart

Technologies

AirPower

Overview variants

	Projection (mm)	Finish	LVI-nro	Code no.
	167	Chrome	6150243	34113000
		AXOR FinishPlus*		34113XXX
	227	Chrome	6150245	34116000
		AXOR FinishPlus*		34116XXX

Required parts:	Code no.
Basic set for single lever basin mixer for concealed installation wall-mounted	13623180

*AXOR FinishPlus: For further AXOR FinishPlus surfaces please see the AXOR FinishPlus overview on page 27.

3-hole basin mixer 160 with lever handles, escutcheons and pop-up waste set

Features

/ consists of: 3-hole basin mixer, waste set
/ ComfortZone 160
/ projection: 135 mm
/ spout height: 156 mm
/ handle variant: lever handle
/ spray type: normal spray
/ maximum flow rate at 3 bar: 5 l/min
/ ceramic valves hot/cold 90°
/ suitable for continuous flow water heaters
/ pop-up waste set G 1¼
/ connection type: G ⅜ connections
/ connection dimension: DN15
/ EU taxonomy: max. 6 l/min - Substantial Contribution (SC) possible

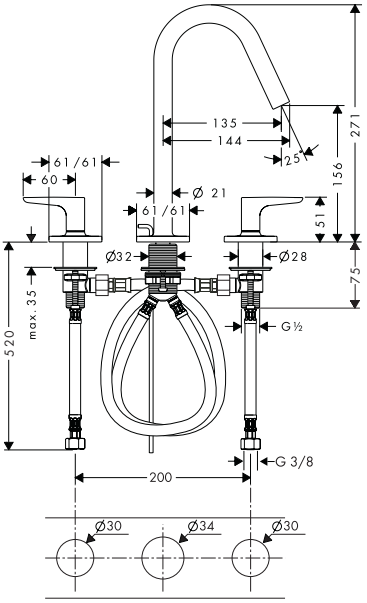

Sustainability

EcoSmart

Technologies

AirPower | Comfort Zone

Finish	LVI-nro	Code no.
Chrome	6150564	34133000
AXOR FinishPlus*		34133XXX

3-hole basin mixers for concealed installation wall-mounted with escutcheons

Features of all variants

/ consists of: 3-hole basin mixer for concealed installation wall-mounted, waste set
/ handle variant: lever handle
/ spray type: normal spray
/ maximum flow rate at 3 bar: 5 l/min
/ ceramic valves hot/cold 90°
/ suitable for continuous flow water heaters
/ non-closing waste set
/ connection type: basic set
/ connection dimension: DN15
/ EU taxonomy: max. 6 l/min - Substantial Contribution (SC) possible

166

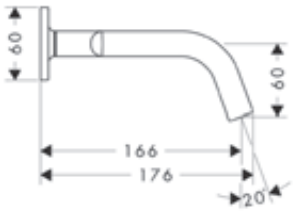

226

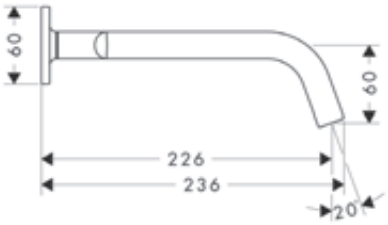

Sustainability

EcoSmart

Technologies

AirPower

Overview variants

Projection (mm)	Finish	LVI-nro	Code no.
166	Chrome	6150565	34313000
	AXOR FinishPlus*		34313XXX
226	Chrome	6150566	34315000
	AXOR FinishPlus*		34315XXX

Required parts:		Code no.
	Basic set for 3-hole basin mixer for concealed installation wall-mounted	10303180

Measurements within scale drawings are in mm.
Technical specifications and units of measure are subject to change.

Bath spout

Features

/ 1 function
/ projection: 182 mm
/ maximum flow rate at 3 bar: 22 l/min
/ connection dimension: DN20
/ spray type: normal spray

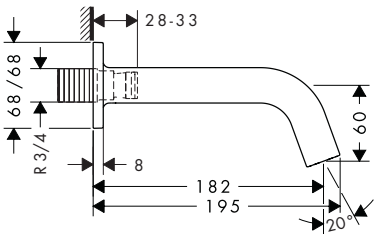

Technologies

AirPower

Finish	LVI-nro	Code no.
Chrome	6557013	34410000
AXOR FinishPlus*		34410XXX

Porter units

Features of all variants

/ integrated support function
/ metal housing with internal water supply made of plastic
/ non-return valve
/ connection type: G ½
/ for shower hoses with a conical nut

round

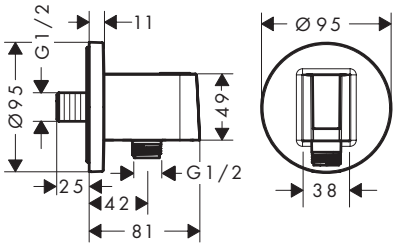

square

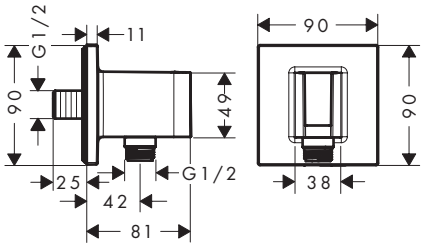

softsquare

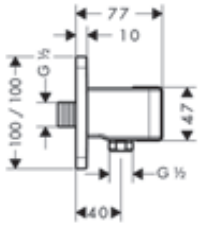

Overview variants

Shape	Finish	LVI-nro	Code no.
round	Chrome		36733000
	Matt Black		36733670
	AXOR FinishPlus*		36733XXX
square	Chrome		36734000
	Matt Black		36734670
	AXOR FinishPlus*		36734XXX
softsquare	Chrome	6551013	11626000
	Matt Black		11626670
	AXOR FinishPlus*		11626XXX

*AXOR FinishPlus: For further AXOR FinishPlus surfaces please see the AXOR FinishPlus overview on page 27.

Porter unit 120/120 softsquare

Features

/ integrated support function
/ metal connection angle
/ non-return valve
/ connection type: G ½

/ for shower hoses with a conical nut
/ in a joined installation (10 mm distance) we recommend for perfect handling only the horizontal installation

/ in a joined installation (10 mm distance), the basic set no.28486180 must be used
/ in a freely-arranged installation (distance greater than 10 mm), no basic set is required

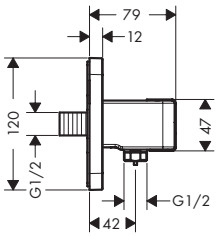

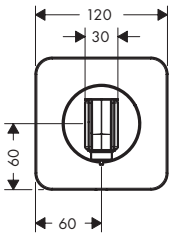

Finish	Code no.
Chrome	36724000
Matt Black	36724670
AXOR FinishPlus*	36724XXX

Shower holder round

Features

/ fixed holding position

/ for hose with conical nut

/ material: metal

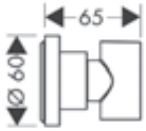

Finish	LVI-nro	Code no.
Chrome	6555616	39525000
AXOR FinishPlus*		39525XXX

Measurements within scale drawings are in mm.
Technical specifications and units of measure are subject to change.

AXOR Uno

Basin 174
Bath 183

AXOR Uno

The power of simplicity

AXOR Uno is about the purity of perfection. And about the simple shapes that form a visible design. Inspired by the original purists. The mixer consists of pipes – the original form of water transport – put together at precise right angles. Subtly excessive, based on the golden ratio. This ascetic form exudes a great strength. The power of simplicity.

Design: PHOENIX

"IMPLEMENTED AT THE HIGHEST TECHNOLOGICAL LEVELS, AXOR UNO IS THE QUINTESSENCE OF PURISM: CLEAN, MINIMALIST AND SUBTLE."

Andreas Diefenbach, PHOENIX

CHARACTERISTIC DESIGN FEATURE:
Purist mixer design: A clear design language with basic cylindrical forms. Precisely put together at right angles. Subtly excessive, based on the golden ratio.

THE DESIGNER'S IDEA:
An appreciation of design and material: With the pipe, one of the oldest forms of water transport, AXOR Uno embodies radical reduction to the essentials. The material and the design are the clear focus of the mixers.

SPECIAL COLLECTION HIGHLIGHTS:

- Two design families and three handle variants: a modern, bow-shaped handle, a purist zero handle or a handle with Select technology
- The design of the AXOR Uno 200 wash basin mixers is based on the principle of the golden ratio, a classic proportional relationship
- The perfect addition to AXOR Uno in the shower: AXOR Showerpipe 800 – also rigorously purist in design
- AXOR FinishPlus surface in Brushed Nickel is available ex stock
- AXOR Uno is a redesign of the successful AXOR Uno collection introduced in 1985

Learn more about AXOR Uno:
axor-design.com

Purism. Without exception

The two design families of the AXOR Uno collection embody purism in different versions. Characteristic of all of the products are clear lines and cylinders put together at precise right angles. With handle variants such as the bow-shaped handle, the zero handle or the handle with Select technology, maximum ergonomics meets minimalist design.

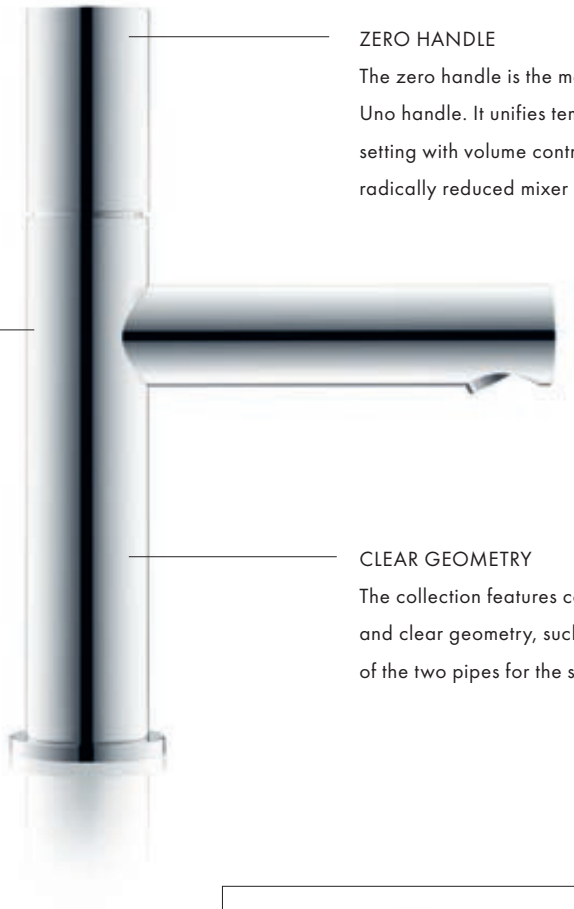

ZERO HANDLE
The zero handle is the most purist AXOR Uno handle. It unifies temperature setting with volume control for a radically reduced mixer form

INTERLOCKING PIPES
Pipes, precisely put together, are the characteristic feature of AXOR Uno and underscore the purist look

CLEAR GEOMETRY
The collection features concise contours and clear geometry, such as the right angle of the two pipes for the spout and body

BOW-SHAPED HANDLE
The bow-shaped handle offers especially ergonomic operation.

SELECT BUTTON
The Select button is an intuitive control element.

For matching products please refer to the AXOR Program chapters

Single lever basin mixers with zero handle

Features of all variants

/ consists of: single lever basin mixer, waste set
/ handle variant: cylinder handle
/ spray type: laminar spray
/ maximum flow rate at 3 bar: 5 l/min
/ ceramic cartridge
/ temperature limitation adjustable
/ suitable for continuous flow water heaters
/ connection type: G ⅜ connections
/ connection dimension: DN15
/ EU taxonomy: max. 6 l/min - Substantial Contribution (SC) possible

110

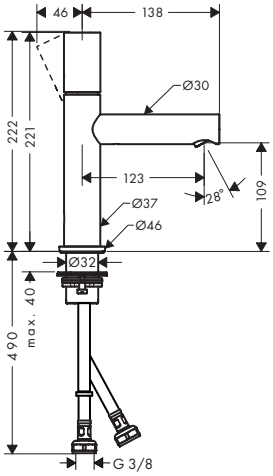

200

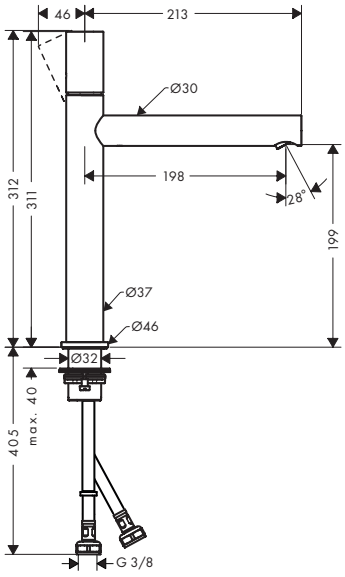

260

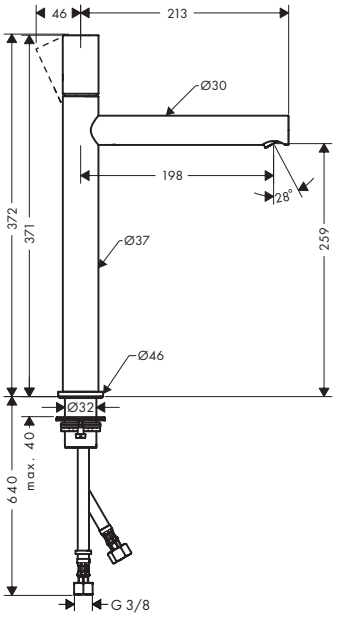

Sustainability

EcoSmart

Technologies

Comfort Zone

Overview variants

ComfortZone	Projection (mm)	Spout height (mm)	Waste set	For wash bowls	Finish	LVI-nro	Code no.
110	123	109	pop-up	–	Chrome	6150614	45001000
					Brushed Nickel	6150615	45001820
					AXOR FinishPlus*		45001XXX
110	123	109	non-closing	–	Chrome	6150617	45002000
					Brushed Nickel	6150618	45002820
					AXOR FinishPlus*		45002XXX
200	198	199	non-closing	■	Chrome	6150620	45003000
					Brushed Nickel	6150621	45003820
					AXOR FinishPlus*		45003XXX
260	198	259	non-closing	■	Chrome	6150623	45004000
					Brushed Nickel	6150624	45004820
					AXOR FinishPlus*		45004XXX

Measurements within scale drawings are in mm.
Technical specifications and units of measure are subject to change.

Basin mixers Select

Features of all variants

/ consists of: Basin mixer, waste set
/ handle variant: cylinder handle
/ spray type: laminar spray
/ maximum flow rate at 3 bar: 5 l/min
/ Select cartridge with temperature control
/ temperature limitation adjustable
/ suitable for continuous flow water heaters
/ connection type: G ⅜ connections
/ connection dimension: DN15
/ EU taxonomy: max. 6 l/min - Substantial Contribution (SC) possible

80

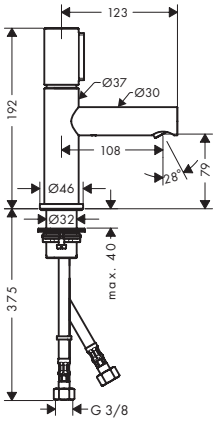

110

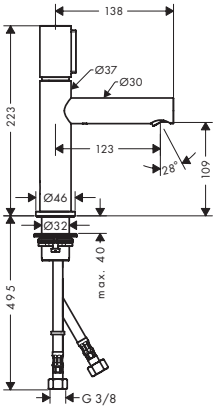

200

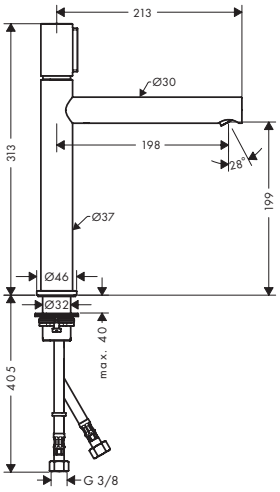

260

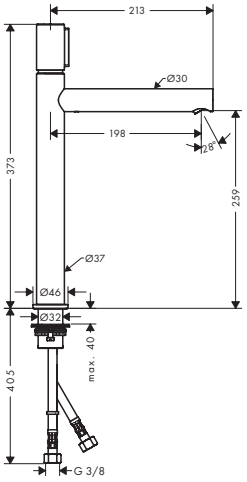

Sustainability

EcoSmart

Technologies

Select | Comfort Zone

Overview variants

ComfortZone	Projection (mm)	Spout height (mm)	Waste set	For wash bowls	Finish	LVI-nro	Code no.
80	108	79	non-closing	–	Chrome	6150641	45015000
					Brushed Nickel	6150642	45015820
					AXOR FinishPlus*		45015XXX
110	123	109	pop-up	–	Chrome	6150629	45010000
					Brushed Nickel	6150630	45010820
					AXOR FinishPlus*		45010XXX
110	123	109	non-closing	–	Chrome	6150632	45012000
					Brushed Nickel	6150633	45012820
					AXOR FinishPlus*		45012XXX
200	198	199	non-closing	■	Chrome	6150635	45013000
					Brushed Nickel	6150636	45013820
					AXOR FinishPlus*		45013XXX
260	198	259	non-closing	■	Chrome	6150638	45014000
					Brushed Nickel	6150639	45014820
					AXOR FinishPlus*		45014XXX

*AXOR FinishPlus: For further AXOR FinishPlus surfaces please see the AXOR FinishPlus overview on page 27.

Single lever basin mixers with loop handle

Features of all variants

/ consists of: single lever basin mixer, waste set
/ spray type: normal spray
/ maximum flow rate at 3 bar: 5 l/min
/ ceramic cartridge
/ temperature limitation adjustable
/ suitable for continuous flow water heaters
/ connection type: G ⅜ connections
/ connection dimension: DN15
/ EU taxonomy: max. 6 l/min - Substantial Contribution (SC) possible

70

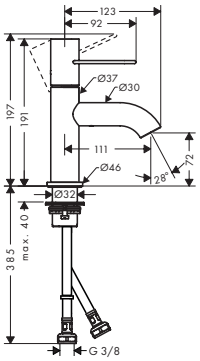

100

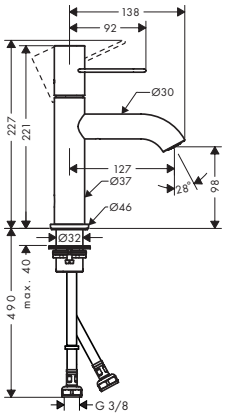

190

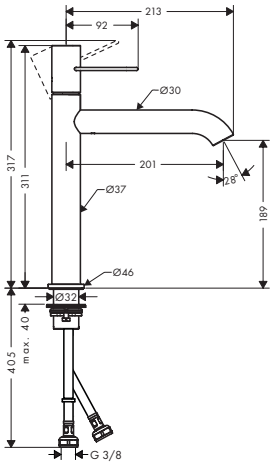

250

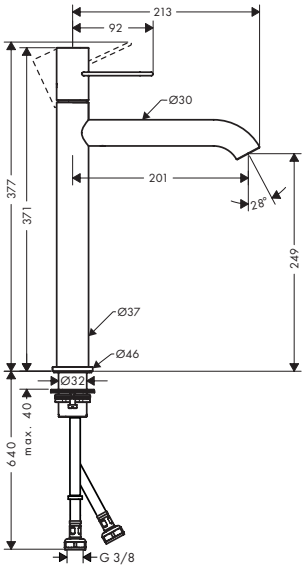

Sustainability

EcoSmart

Technologies

AirPower | Comfort Zone | Quick Clean

Certificates/declarations

EPD

Overview variants

ComfortZone	Projection (mm)	Spout height (mm)	Waste set	For wash bowls	Finish	LVI-nro	Code no.
70	111	72			Chrome	6150788	38038000
					Brushed Nickel		38038820
					AXOR FinishPlus*		38038XXX
100	127	98	pop-up	–	Chrome	6150575	38023000
					Brushed Nickel	6150576	38023820
					AXOR FinishPlus*		38023XXX
100	127	98	non-closing	–	Chrome	6150578	38026000
					Brushed Nickel	6150579	38026820
					AXOR FinishPlus*		38026XXX
190	201	189	non-closing	■	Chrome	6150581	38032000
					Brushed Nickel	6150582	38032820
					AXOR FinishPlus*		38032XXX
250	201	249	non-closing	■	Chrome	6150584	38034000
					Brushed Nickel	6150585	38034820
					AXOR FinishPlus*		38034XXX

Measurements within scale drawings are in mm.
Technical specifications and units of measure are subject to change.

Single lever basin mixer 240 with loop handle and pop-up waste set

Features

/ consists of: single lever basin mixer, waste set
/ ComfortZone 240
/ projection: 174 mm
/ spout height: 238 mm
/ handle variant: flat handle
/ swivel range 115°
/ spray type: normal spray
/ maximum flow rate at 3 bar: 5 l/min
/ ceramic cartridge
/ temperature limitation adjustable
/ suitable for continuous flow water heaters
/ pop-up waste set G 1¼
/ connection type: G ⅜ connections
/ connection dimension: DN15
/ EU taxonomy: max. 6 l/min - Substantial Contribution (SC) possible

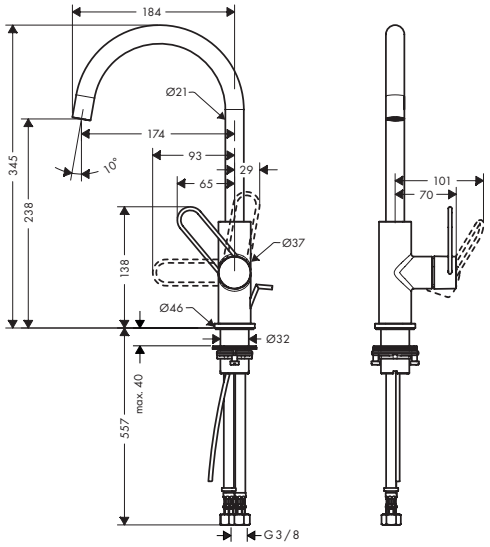

Sustainability

EcoSmart

Technologies

AirPower · Comfort Zone

Finish	LVI-nro	Code no.
Chrome	6150587	38036000
Brushed Nickel	6150588	38036820
AXOR FinishPlus*		38036XXX

Basin mixers for concealed installation wall-mounted Select

Features of all variants

/ consists of: basin mixer for concealed installation wall-mounted, waste set
/ handle variant: cylinder handle
/ spray type: normal spray
/ maximum flow rate at 3 bar: 5 l/min
/ Start/stop valve to operate the functions
/ separation of temperature control and open/close
/ suitable for continuous flow water heaters
/ non-closing waste set
/ connection type: basic set
/ connection dimension: DN15
/ handle can be positioned on the right or left, depending on the basic set installation
/ EU taxonomy: max. 6 l/min - Substantial Contribution (SC) possible

158

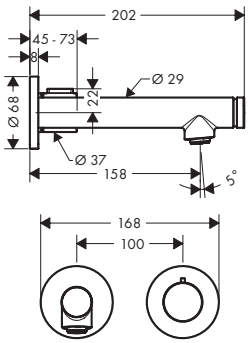

221

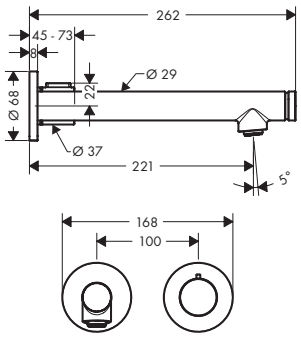

Sustainability

EcoSmart

Technologies

Select · AirPower · Quick Clean

Certificates/declarations

EPD

Overview variants

	Projection (mm)	Finish	LVI-nro	Code no.
	158	Chrome	6150652	45112000
		Brushed Nickel	6150653	45112820
		AXOR FinishPlus*		45112XXX
	221	Chrome	6150655	45113000
		Brushed Nickel	6150656	45113820
		AXOR FinishPlus*		45113XXX

Required parts:		Code no.
	Basic set for single lever basin mixer for concealed installation wall-mounted	13623180

*AXOR FinishPlus: For further AXOR FinishPlus surfaces please see the AXOR FinishPlus overview on page 27.

Single lever basin mixers for concealed installation wall-mounted with escutcheons

Features of all variants

/ consists of: single lever basin mixer for concealed installation wall-mounted, waste set
/ spray type: normal spray
/ maximum flow rate at 3 bar: 5 l/min
/ ceramic cartridge
/ suitable for continuous flow water heaters
/ non-closing waste set
/ connection type: basic set
/ connection dimension: DN15
/ handle can be positioned on the right or left, depending on the basic set installation
/ EU taxonomy: max. 6 l/min - Substantial Contribution (SC) possible

165

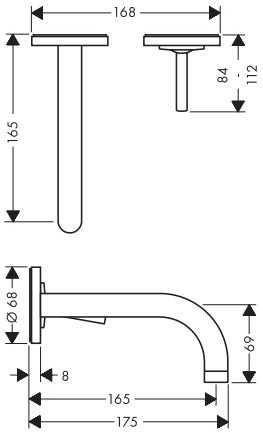

225

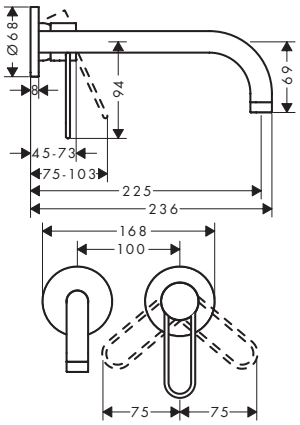

Sustainability

EcoSmart

Technologies

AirPower

Certificates/declarations

EPD

Overview variants

Projection (mm)	Handle version	Finish	LVI-nro	Code no.
165	pin	Chrome	6150257	38113000
		Brushed Nickel		38113820
		AXOR FinishPlus*		38113XXX
225	pin	Chrome	6150258	38116000
		Brushed Nickel		38116820
		AXOR FinishPlus*		38116XXX
165	loop	Chrome	6150596	38121000
		Brushed Nickel	6150597	38121820
		AXOR FinishPlus*		38121XXX
225	loop	Chrome	6150599	38122000
		Brushed Nickel	6150600	38122820
		AXOR FinishPlus*		38122XXX

Required parts:	Code no.
Basic set for single lever basin mixer for concealed installation wall-mounted	13623180

Measurements within scale drawings are in mm.
Technical specifications and units of measure are subject to change.

Single lever basin mixers for concealed installation wall-mounted with plate

Features of all variants

/ consists of: single lever basin mixer for concealed installation wall-mounted, waste set
/ handle variant: pin handle
/ spray type: normal spray
/ maximum flow rate at 3 bar: 5 l/min
/ ceramic cartridge
/ suitable for continuous flow water heaters
/ non-closing waste set
/ connection type: basic set
/ connection dimension: DN15
/ handle can be positioned on the right or left, depending on the basic set installation
/ EU taxonomy: max. 6 l/min - Substantial Contribution (SC) possible

165

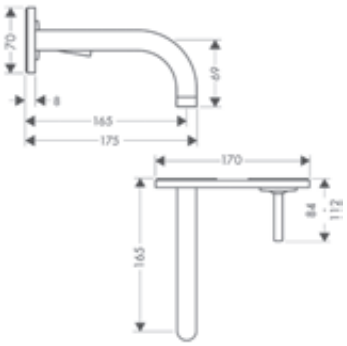

225

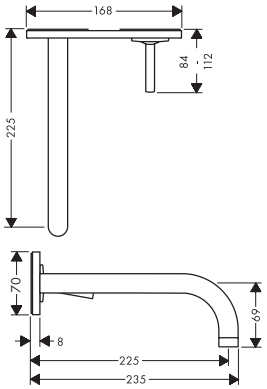

Sustainability

EcoSmart

Technologies

AirPower

Overview variants

	Projection (mm)	Finish	LVI-nro	Code no.
	165	Chrome	6150256	38112000
		Brushed Nickel		38112820
		AXOR FinishPlus*		38112XXX
	225	Chrome		38115000
		Brushed Nickel		38115820
		AXOR FinishPlus*		38115XXX

Required parts:

		Code no.
	Basic set for single lever basin mixer for concealed installation wall-mounted	13623180

3-hole basin mixers

Features of all variants

/ consists of: 3-hole basin mixer, waste set
/ swivel range 110°
/ maximum flow rate at 3 bar: 5 l/min
/ ceramic valves hot/cold 90°
/ suitable for continuous flow water heaters
/ pop-up waste set G 1¼
/ connection type: G ⅜ connections
/ connection dimension: DN15
/ EU taxonomy: max. 6 l/min - Substantial Contribution (SC) possible

160

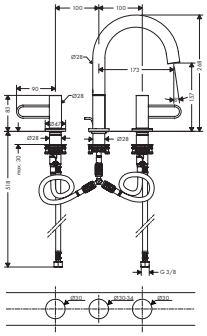

200

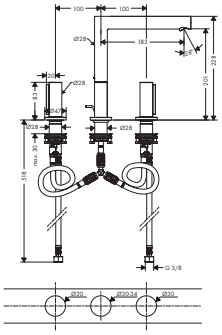

Sustainability

EcoSmart

Technologies

AirPower | Comfort Zone | Quick Clean

Overview variants

ComfortZone	Projection (mm)	Spout height (mm)	Spray types	Waste set	Handle version	Finish	LVI-nro	Code no.
160	173	157	normal spray	pop-up	loop	Chrome	6150593	38054000
						Brushed Nickel	6150594	38054820
						AXOR FinishPlus*		38054XXX

For more information about this product, please see the next page.

*AXOR FinishPlus: For further AXOR FinishPlus surfaces please see the AXOR FinishPlus overview on page 27.

3-hole basin mixers

Overview variants

ComfortZone	Projection (mm)	Spout height (mm)	Spray types	Waste set	Handle version	Finish	LVI-nro	Code no.
200	183	201	laminar spray	pop-up	zero	Chrome	6150658	45133000
						Brushed Nickel	6150659	45133820
						AXOR FinishPlus*		45133XXX

Single lever basin mixers floor-standing

Features of all variants

/ maximum flow rate at 3 bar: 5 l/min
/ ceramic cartridge
/ temperature limitation adjustable
/ suitable for continuous flow water heaters
/ connection type: basic set
/ connection dimension: DN15
/ EU taxonomy: max. 6 l/min - Substantial Contribution (SC) possible

loop handle

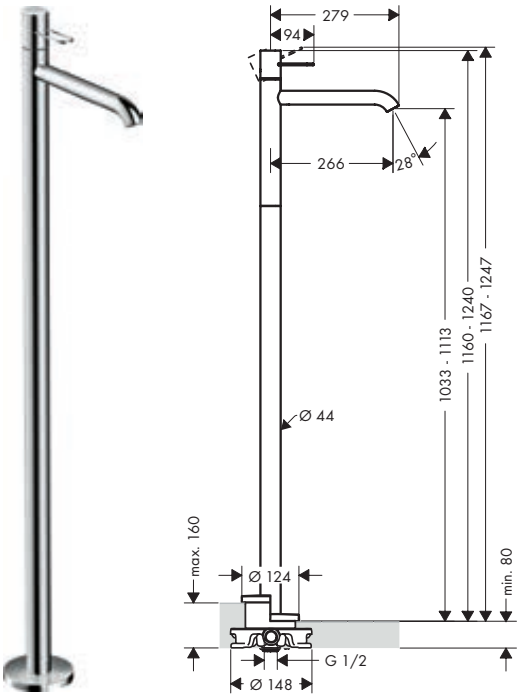

zero handle

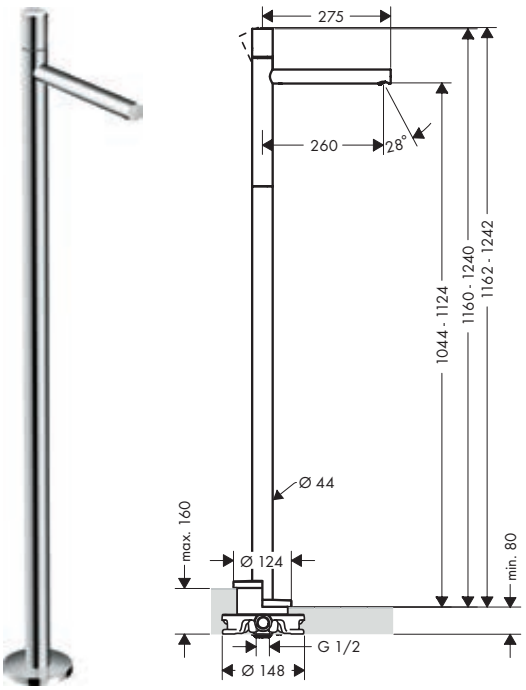

Sustainability

EcoSmart

Technologies

AirPower
Quick Clean

Overview variants

Projection (mm)	Spray types	Handle version	Finish	LVI-nro	Code no.
266	normal spray	loop	Chrome	6150590	38037000
			Brushed Nickel	6150591	38037820
			AXOR FinishPlus*		38037XXX
260	laminar spray	zero	Chrome	6150647	45037000
			Brushed Nickel	6150648	45037820
			AXOR FinishPlus*		45037XXX

Required parts:	Code no.
Basic set for mixers floor-standing	10452180

Measurements within scale drawings are in mm.
Technical specifications and units of measure are subject to change.

Electronic basin mixers for concealed installation wall-mounted

Features of all variants

/ spray type: laminar spray
/ maximum flow rate at 3 bar: 5 l/min
/ temperature adjustable via basic set
/ infrared sensor technology
/ automatic environmental adjustment of infrared sensor
/ adjustable optical range of infrared sensor (5 settings)
/ 230 V / 50 Hz mains connection
/ hygiene rinse activatable (automatic water flow)
/ frequency of hygiene rinse: 24 h
/ flushing time hygiene rinse: 10 s
/ permanent rinse activatable (single water flow for 180 seconds, suitable for thermal disinfection)
/ cleaning mode: manual water stop for washbasin cleaning
/ TÜV certified
/ dirt filters in the connection hoses
/ for ideal function please note a minimum distance of 140 mm from the aerators center to the back rim of the wash basin

161

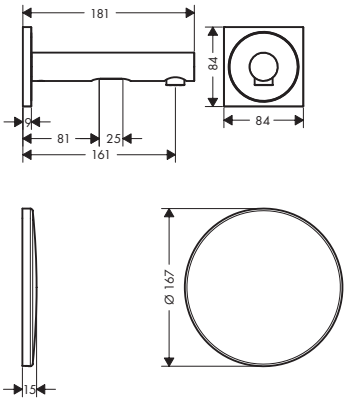

221

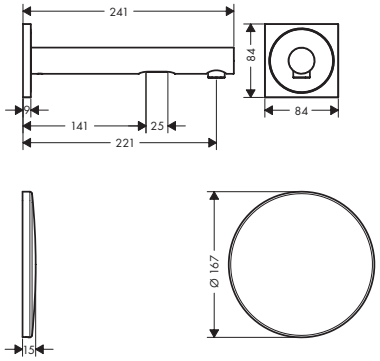

Sustainability

EcoSmart

Technologies

Sensor Activation

Overview variants

	Projection (mm)	Finish	LVI-nro	Code no.
	161	Chrome	6150650	45110000
		AXOR FinishPlus*		45110XXX
	221	Chrome	6150651	45111000
		AXOR FinishPlus*		45111XXX

Required parts:		Code no.
	Basic set for electronic basin mixer for concealed installation wall-mounted	16180180

*AXOR FinishPlus: For further AXOR FinishPlus surfaces please see the AXOR FinishPlus overview on page 27.

Electronic basin mixer with temperature pre-adjustment with mains connection 230 V

Features

/ ComfortZone 100
/ projection: 148 mm
/ spray type: normal spray
/ maximum flow rate at 3 bar: 3,5 l/min
/ temperature adjustable via basic set
/ suitable for continous flow water heaters
/ infrared sensor technology
/ automatic environmental adjustment of infrared sensor
/ adjustable optical range of infrared sensor (2 settings)
/ 230 V / 50 Hz mains connection
/ running time: 10 s
/ hygiene rinse activatable (automatic water flow)
/ frequency of hygiene rinse: 24 h
/ flushing time hygiene rinse: 10 s
/ permanent rinse activatable (single water flow for 180 seconds, suitable for thermal disinfection)
/ cleaning mode: manual water stop for washbasin cleaning
/ connection dimension: DN15
/ dirt filters in the connection hoses

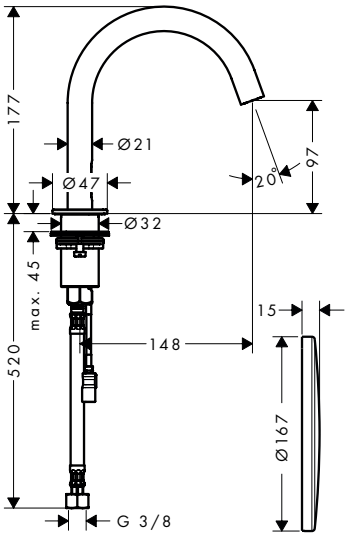

Sustainability

EcoSmart

Technologies

Sensor Activation | AirPower | Comfort Zone

Finish	LVI-nro	Code no.
Chrome	6150571	38010000
Brushed Gold Optic		38010250
Matt Black	6150815	38010670
Matt White		38010700
Stainless Steel Optic		38010800
Brushed Nickel		38010820
Brushed Brass		38010950
Polished Gold Optic		38010990
AXOR FinishPlus*		38010XXX

This product is not available in the AXOR FinishPlus surfaces Red Gold and Black Chrome.

Required parts:	Code no.
AXOR Uno Basic set for electronic basin mixer	16182180

Measurements within scale drawings are in mm.
Technical specifications and units of measure are subject to change.

Single lever bath mixers floor-standing

Features of all variants

/ consists of: single lever bath mixer floor standing, baton hand shower, shower hose, shower holder
/ 2 functions
/ spray type mixer: normal spray
/ spray type hand shower: Rain, Mono
/ maximum flow rate at 3 bar: 18 l/min
/ flow rate for bath spout at 3 bar: 18 l/min
/ flow rate of hand shower at 3 bar: 13 l/min
/ ceramic cartridge
/ temperature limitation adjustable
/ diverter with automatic resetting
/ non-return valve
/ connection dimension: DN15
/ connection type: basic set
/ deck mounted
/ min. operating pressure: 1 bar
/ max. operating pressure: 10 bar

loop handle

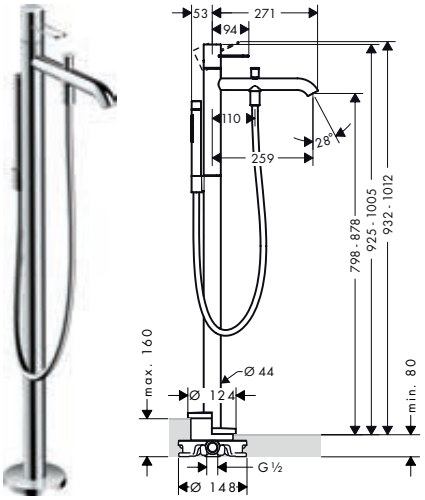

zero handle

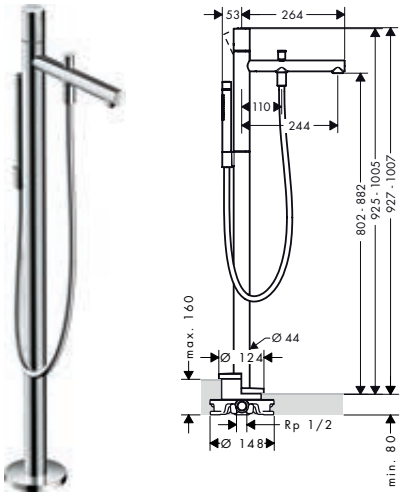

Technologies

AirPower, Quick Clean

Spray types

Rain, Mono

Overview variants

Projection (mm)	Handle version	Finish	LVI-nro	Code no.
259	loop	Chrome	6350823	38442000
		Brushed Nickel	6350824	38442820
		AXOR FinishPlus*		38442XXX
244	zero	Chrome	6350847	45416000
		Brushed Nickel	6350848	45416820
		AXOR FinishPlus*		45416XXX

Required parts:	Code no.
Basic set for mixers floor-standing	10452180

Rim mounted bath set with hand shower

Features

/ consists of: hand shower, shower holder, shower hose, Secubox, Secuflex hose brake, hose insert
/ suitable for for installation on bath rim or tile surround (no mounting plate available)
/ connection dimension: DN15
/ drilling diameter on bath tub: Ø 50 mm
/ maximum pull-out length of hand shower 1.10 m

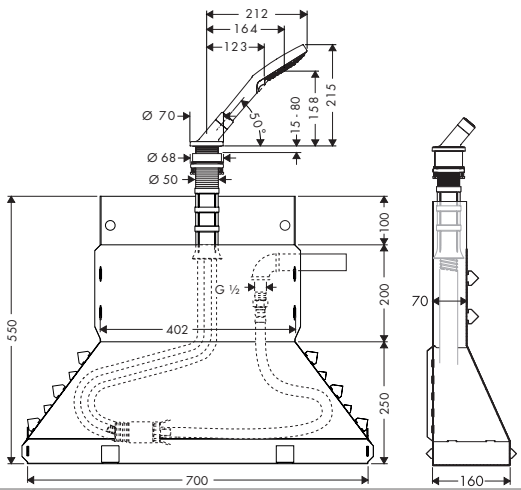

Finish	LVI-nro	Code no.
Chrome	6559379	19418000
AXOR FinishPlus*		19418XXX

*AXOR FinishPlus: For further AXOR FinishPlus surfaces please see the AXOR FinishPlus overview on page 27.

Bath spouts floor-standing

Features of all variants

/ 1 function
/ connection type: basic set
/ projection: 226 mm
/ free-standing installation
/ maximum flow rate at 3 bar: 18 l/min
/ spray type: normal spray

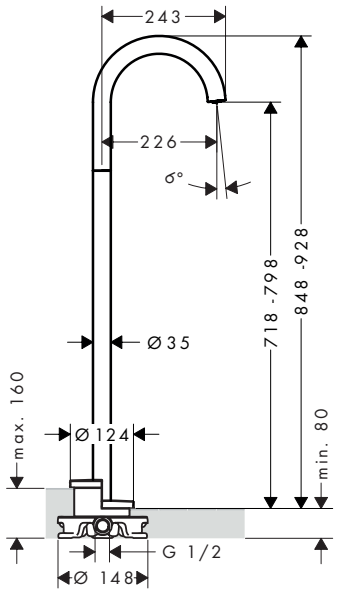

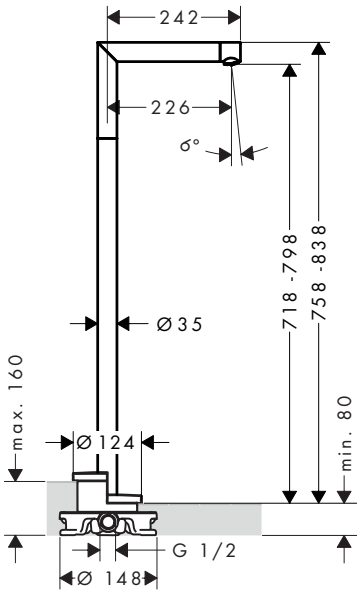

Technologies

AirPower
Quick Clean

Overview variants

Projection (mm)	Version	Finish	Code no.
226	curved	Chrome	38412000
		Matt Black	38412670
		Matt White	38412700
		Brushed Nickel	38412820
		AXOR FinishPlus*	38412XXX
226	straight	Chrome	45412000
		Brushed Nickel	45412820
		AXOR FinishPlus*	45412XXX

Required parts:	Code no.
Basic set for mixers floor-standing	10452180

Measurements within scale drawings are in mm.
Technical specifications and units of measure are subject to change.

Bath spouts

Features of all variants

/ 1 function
/ with escutcheon
/ wall-mounted
/ maximum flow rate at 3 bar: 19 l/min
/ connection dimension: DN20
/ spray type: normal spray

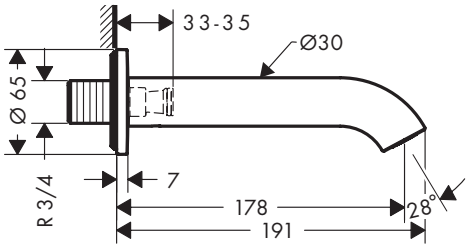

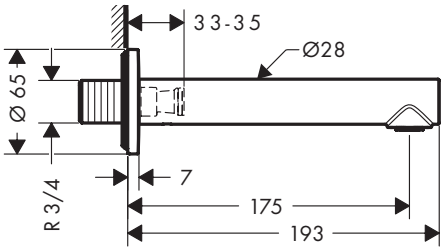

Technologies

AirPower | Quick Clean

Overview variants

Projection (mm)	Version	Finish	Code no.
178	curved	Chrome	38411000
		Matt Black	38411670
		Matt White	38411700
		Brushed Nickel	38411820
		AXOR FinishPlus*	38411XXX
175	straight	Chrome	45410000
		Brushed Nickel	45410820
		AXOR FinishPlus*	45410XXX

*AXOR FinishPlus: For further AXOR FinishPlus surfaces please see the AXOR FinishPlus overview on page 27.

C
H

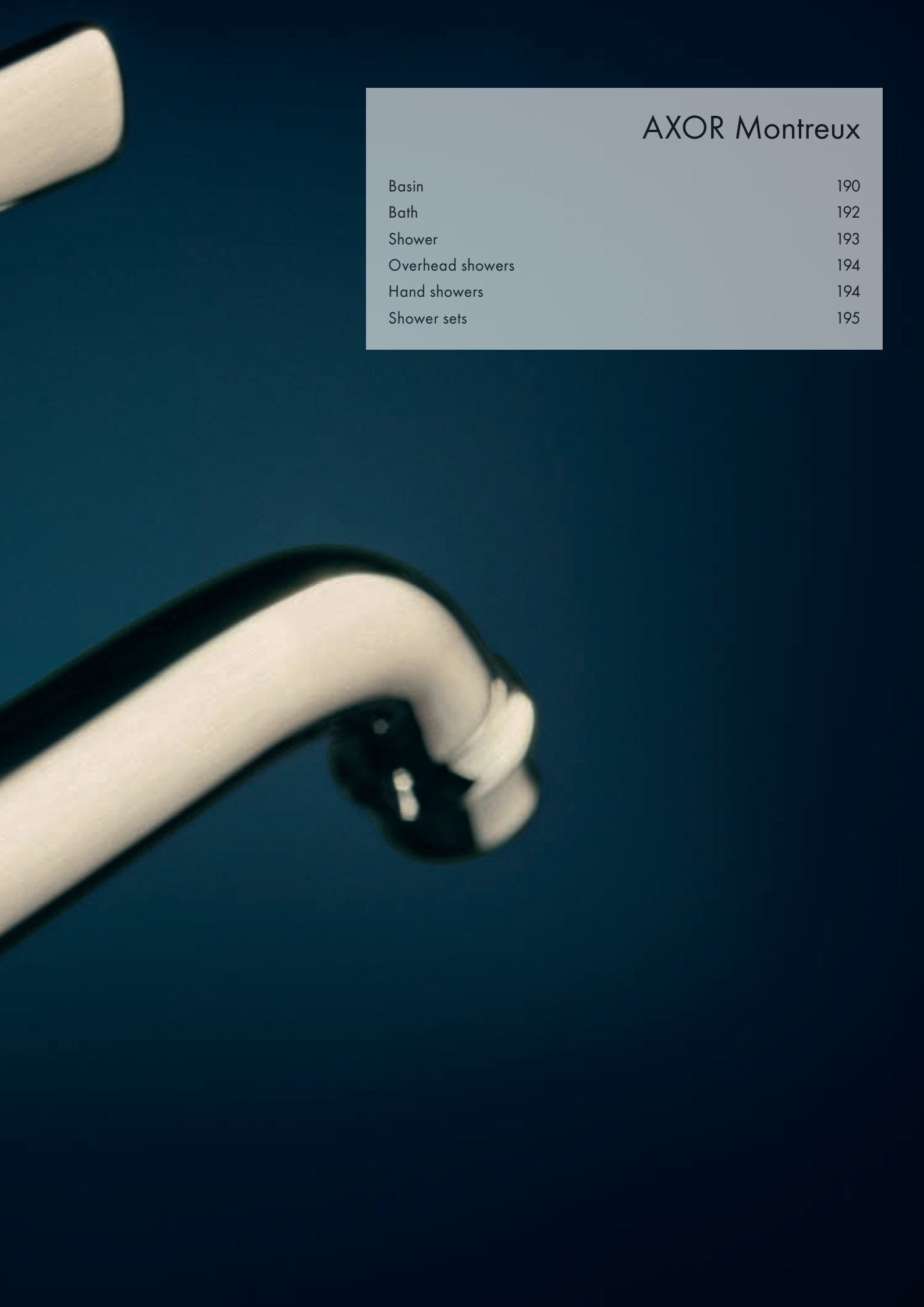

AXOR Montreux

Basin	190
Bath	192
Shower	193
Overhead showers	194
Hand showers	194
Shower sets	195

AXOR Montreux

The tradition of industrial design

The AXOR Montreux mixer collection is modelled on the first industrially produced mixers from around the turn of the last century. The Belle Époque era symbolizes a time of fundamental change and technical progress. Immortalized in Europe's grand hotels and in Montreux, the legendary spa resort on the shores of Lake Geneva. AXOR Montreux combines outstanding technology with modern functionality.

Design: PHOENIX

"AXOR MONTREUX REINTERPRETS THE FEATURES OF THE EARLY 20TH CENTURY WITH GREAT PRECISION AND WORKMANSHIP, OFFERING USERS THE BEST IN DESIGN AND FUNCTIONALITY."

Andreas Haug, PHOENIX

CHARACTERISTIC DESIGN FEATURE:
Classic, authentic bathroom design: AXOR Montreux is a modern reinterpretation of industrial design with couplings, valves and pipes. Additive design elements for a richly detailed look.

THE DESIGNER'S IDEA:
Authentic aesthetics: AXOR Montreux is an authentic, historical journey back in time to the heady days of industrialization. The collection combines the design of the first industrially manufactured mixers from the turn of the last century with outstanding technology and modern functionality, bringing the Belle Époque into the 21st century.

SPECIAL COLLECTION HIGHLIGHTS:

- Two handle variants: classic with cross handles, modern reinterpretation with lever handles
- Various spout heights for wash basin mixers
- The bridge mixer: A classic three-hole variant
- Particular attention to detail: Porcelain inlays – with individualized inscriptions by request
- Perfect for an overall classic atmosphere and for classic accents in a modern atmosphere
- 2016: AXOR Montreux collection of 2006 expanded

Learn more about AXOR Montreux:
axor-design.com

For matching products please refer to the AXOR Program chapters

AXOR Showers P. 208
AXOR Accessories P. 272
AXOR Basins & bathtubs P. 322
AXOR Electronic P. 312

Single lever basin mixers

Features of all variants

/ consists of: single lever basin mixer, waste set
/ ComfortZone 100
/ projection: 142 mm
/ spout height: 98 mm
/ handle variant: lever handle
/ spray type: normal spray
/ maximum flow rate at 3 bar: 5 l/min
/ ceramic cartridge
/ temperature limitation adjustable
/ suitable for continuous flow water heaters
/ connection type: G ⅜ connections
/ connection dimension: DN15
/ EU taxonomy: max. 6 l/min - Substantial Contribution (SC) possible

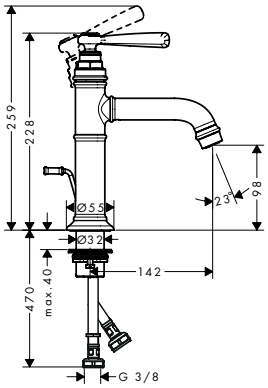

Sustainability

EcoSmart

Technologies

AirPower | Comfort Zone

Certificates/declarations

EPD

Overview variants

ComfortZone	Projection (mm)	Spout height (mm)	Waste set	Finish	LVI-nro	Code no.
100	142	98	pop-up	Chrome	6150530	16515000
				Brushed Nickel	6150531	16515820
				AXOR FinishPlus*		16515XXX
100	142	98	non-closing	Chrome		16516000
				Brushed Nickel		16516820
				AXOR FinishPlus*		16516XXX

3-hole basin mixers

Features of all variants

/ consists of: 3-hole basin mixer, waste set
/ ComfortZone 30
/ projection: 143 mm
/ spout height: 30 mm
/ spray type: normal spray
/ maximum flow rate at 3 bar: 5 l/min
/ ceramic valves hot/cold 90°
/ suitable for continuous flow water heaters
/ pop-up waste set G 1¼
/ connection type: G ⅜ connections
/ connection dimension: DN15
/ EU taxonomy: max. 6 l/min - Substantial Contribution (SC) possible

lever handle

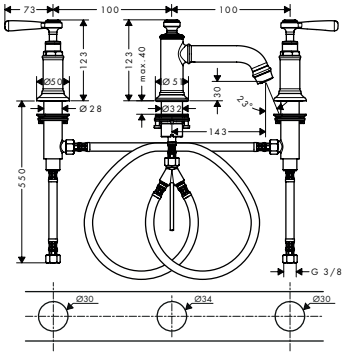

cross handle

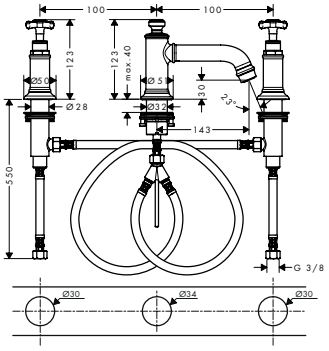

Sustainability

EcoSmart

Technologies

AirPower | Comfort Zone

Overview variants

ComfortZone	Projection (mm)	Spout height (mm)	Handle version	Finish	LVI-nro	Code no.
30	143	30	lever	Chrome	6150538	16535000
				Brushed Nickel	6150539	16535820
				AXOR FinishPlus*		16535XXX

Measurements within scale drawings are in mm.
Technical specifications and units of measure are subject to change.

3-hole basin mixers

Overview variants

ComfortZone	Projection (mm)	Spout height (mm)	Handle version	Finish	LVI-nro	Code no.
30	143	30	cross	Chrome	6150540	16536000
				Brushed Nickel	6150541	16536820
				AXOR FinishPlus*		16536XXX

3-hole basin mixers

Features of all variants

/ consists of: 3-hole basin mixer, waste set
/ ComfortZone 180
/ projection: 175 mm
/ spout height: 179 mm
/ swivel range 120°
/ spray type: laminar spray
/ maximum flow rate at 3 bar: 5 l/min
/ ceramic valves hot/cold 90°
/ suitable for continuous flow water heaters
/ pop-up waste set G 1¼
/ connection type: G ⅜ connections
/ connection dimension: DN15
/ EU taxonomy: max. 6 l/min - Substantial Contribution (SC) possible

lever handle

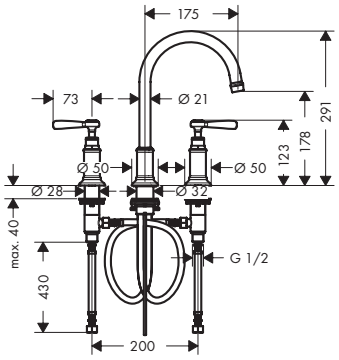

cross handle

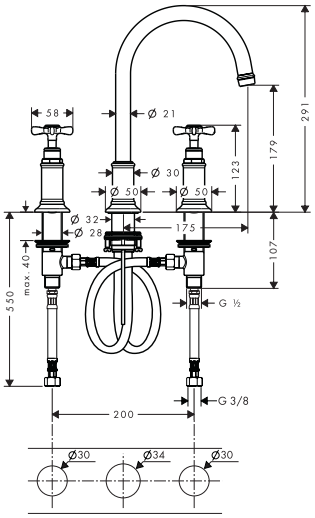

Sustainability

EcoSmart

Technologies

Comfort Zone

Overview variants

ComfortZone	Projection (mm)	Spout height (mm)	Handle version	Finish	LVI-nro	Code no.
180	175	179	lever	Chrome	6150528	16514000
				Brushed Nickel	6150529	16514820
				AXOR FinishPlus*		16514XXX
180	175	179	cross	Chrome	6150526	16513000
				Brushed Nickel	6150527	16513820
				AXOR FinishPlus*		16513XXX

*AXOR FinishPlus: For further AXOR FinishPlus surfaces please see the AXOR FinishPlus overview on page 27.

3-hole basin mixers wall mounted

Features of all variants

/ consists of: 3-hole basin mixer for concealed installation wall-mounted, waste set
/ projection: 165 - 225 mm
/ spray type: normal spray
/ maximum flow rate at 3 bar: 5 l/min
/ ceramic valves hot/cold 90°
/ suitable for continuous flow water heaters
/ non-closing waste set
/ connection type: basic set
/ connection dimension: DN15
/ EU taxonomy: max. 6 l/min - Substantial Contribution (SC) possible

lever handle

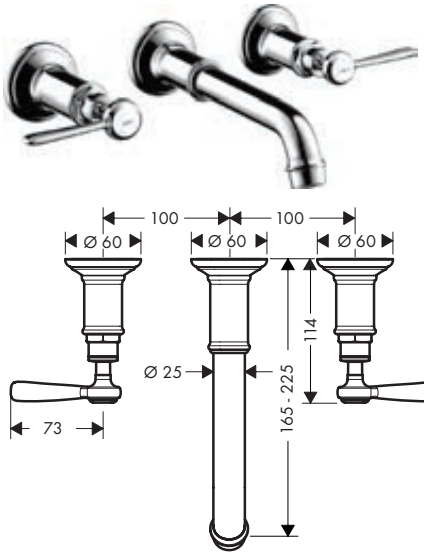

cross handle

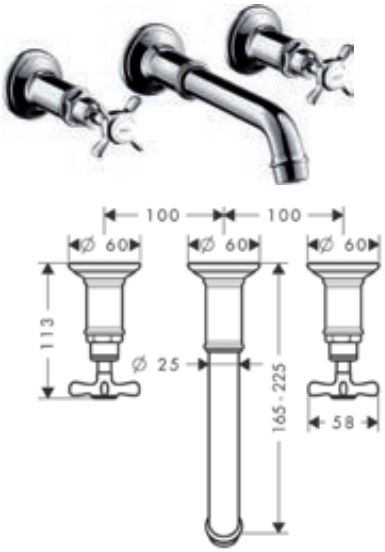

Sustainability

EcoSmart

Technologies

AirPower | Quick Clean

Overview variants

Projection (mm)	Handle version	Finish	LVI-nro	Code no.
165	lever	Chrome	6150536	16534000
		Brushed Nickel	6150537	16534820
		AXOR FinishPlus*		16534XXX
165	cross	Chrome	6150534	16532000
		Brushed Nickel	6150535	16532820
		AXOR FinishPlus*		16532XXX

Required parts:	Code no.
Basic set for 3-hole basin mixer for concealed installation wall-mounted	10303180

Bath spout

Features

/ 1 function
/ connection type: G ¾
/ projection: 166 - 220 mm
/ maximum flow rate at 3 bar: 20 l/min
/ spray type: normal spray

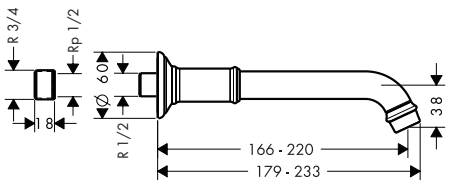

Technologies

AirPower | Quick Clean

Finish	LVI-nro	Code no.
Chrome	6557008	16541000
Brushed Nickel	6557009	16541820
AXOR FinishPlus*		16541XXX

Measurements within scale drawings are in mm.
Technical specifications and units of measure are subject to change.

Shower holder

Features

/ fixed holding position / for hose with conical nut / material: metal

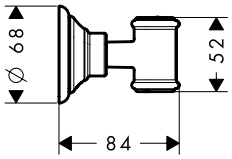

Finish	LVI-nro	Code no.
Chrome	6555613	16325000
Brushed Nickel	6555614	16325820
AXOR FinishPlus*		16325XXX

Wall outlet with non-return valve

Features

/ metal connection angle / non-return valve / connection type: G ½

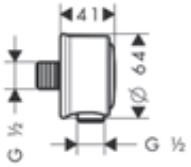

Finish	LVI-nro	Code no.
Chrome	6555309	16884000
Brushed Nickel	6555310	16884820
AXOR FinishPlus*		16884XXX

*AXOR FinishPlus: For further AXOR FinishPlus surfaces please see the AXOR FinishPlus overview on page 27.

Overhead showers 1jet

Features of all variants

/ spray type: RainAir
/ ball-joint: overhead shower angle adjustable
/ material spray disc: metal
/ minimum flow pressure: 1,5 bar
/ spray disc removable for cleaning
/ installation: ceiling or wall
/ connection thread G ½
/ connection dimension: DN15
/ suitable for continous flow water heaters

240

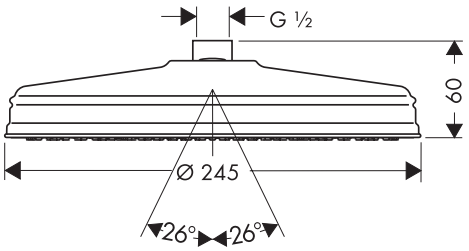

180

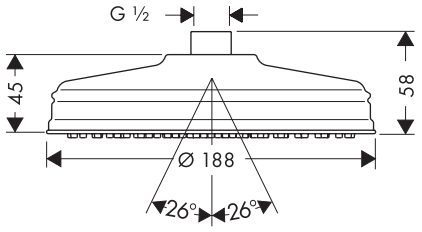

Technologies

Quick Clean, AirPower

Spray types

Rain Air

Certificates/declarations

EPD

Overview variants

Shoulder shower size	Number of sprays	Spray types	Max. flow rate at 3 bar (l/min)	Min. flow pressure (bar)	Finish	Code no.
240	1	RainAir	17	1.5	Chrome	28474000
					Brushed Nickel	28474820
					AXOR FinishPlus*	28474XXX
180	1	RainAir	18	1.5	Chrome	28487000
					Brushed Nickel	28487820
					AXOR FinishPlus*	28487XXX

Hand shower 100 1jet

Features

/ shower head size: 100 mm
/ spray type: RainAir
/ spray disc surface: grey
/ maximum flow rate at 3 bar: 16 l/min
/ minimum flow pressure: 1 bar
/ rinseable screen seal
/ connection thread G ½
/ suitable for continous flow water heaters

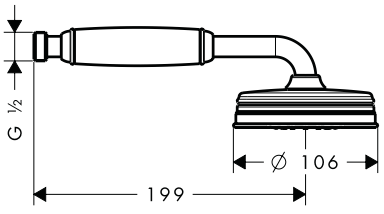

Technologies

Quick Clean, AirPower

Spray types

Rain Air

Finish	LVI-nro	Code no.
Chrome	6555611	16320000
Brushed Nickel	6555612	16320820
AXOR FinishPlus*		16320XXX

Measurements within scale drawings are in mm.
Technical specifications and units of measure are subject to change.

Shower set 0.90 m with hand shower 100 1jet

Features

/ consists of: hand shower, shower bar, shower hose, slider
/ shower head size: 100 mm
/ spray type: RainAir
/ support for shower hose with conical nuts
/ AXOR Montreux wall bar 0.90 m
/ maximum flow rate at 3 bar: 16 l/min
/ minimum flow pressure: 1 bar
/ operating pressure: min. 1 bar/max. 6 bar
/ wall mounting: screw fastening
/ wall supports of metal
/ profile pipe: round
/ shower bar diameter: 25 mm
/ drilling distance 915 mm

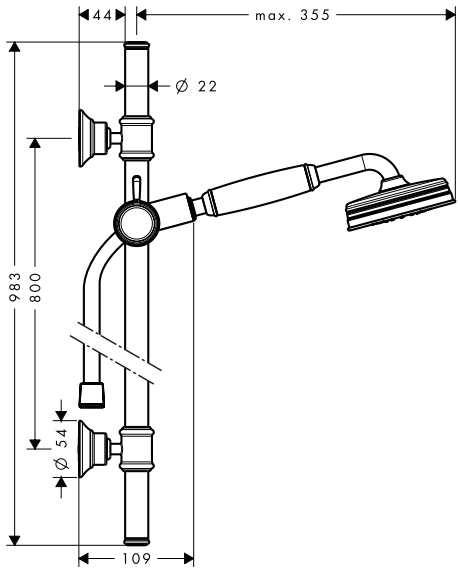

Technologies

Quick Clean
AirPower

Spray types

Rain Air

Finish	LVI-nro	Code no.
Chrome	6559354	27982000
Brushed Nickel	6559355	27982820
AXOR FinishPlus*		27982XXX

*AXOR FinishPlus: For further AXOR FinishPlus surfaces please see the AXOR FinishPlus overview on page 27.

Programs

AXOR ShowerComposition 198

AXOR Showers 208

AXOR Shower controls 260

AXOR Accessories 272

AXOR Electronic faucets 312

AXOR Wash basins and bathtubs 322

AXOR Drain, wastes and overflows 340

AXOR Basic sets 348

AXOR ShowerComposition

Overhead showers	204
Shower panel	205
Thermostats	384

" WITH THE NEW AXOR SHOWERCOMPOSITION SHOWER PROGRAM, WE HAVE COMPOSED THREE TO FOUR OBJECTS IN ONE."

Philippe Starck

AXOR ShowerComposition

Reflecting uniqueness - making an architectural statement

A shower is a very intimate space, and it must be flexible and adaptable to an individual's needs. Designed by world-renowned creator Philippe Starck, AXOR ShowerComposition introduces a striking new universal design language, modern and timeless, to the shower area.

Design: Philippe Starck

CHARACTERISTIC DESIGN FEATURE:
Reduced, rectilinear design with flat, elegant surfaces and ultra-slim profiles.

THE DESIGNERS´IDEA:
The AXOR ShowerComposition Program combines three to four objects in one.

SPECIAL PROGRAM HIGHLIGHTS:

- The all-in-one shower panel integrates an overhead shower, a body shower, a thermostatic module, and a hand shower
- Individual shower modules can be composed and arranged for a truly personalized shower experience.
- PowderRain cocoons the body in ultra-fine droplets
- The AXOR textile shower hose brings more coziness and comfort to the bathroom.

Learn more about AXOR ShowerComposition:
axor-design.com

Innovation meets design

The program features sleek, flat surfaces and ultra-slim profiles in an architectonic composition that presents novel possibilities for individual expression. Whether as an all-in-one shower panel or a personalized arrangement of floating modules, AXOR ShowerComposition offers exceptional performance, including immersive PowderRain spray mode overhead and PowderRain shoulder showers with angle adjustment. AXOR ShowerComposition provides the maximum of services by using the minimum of matter.

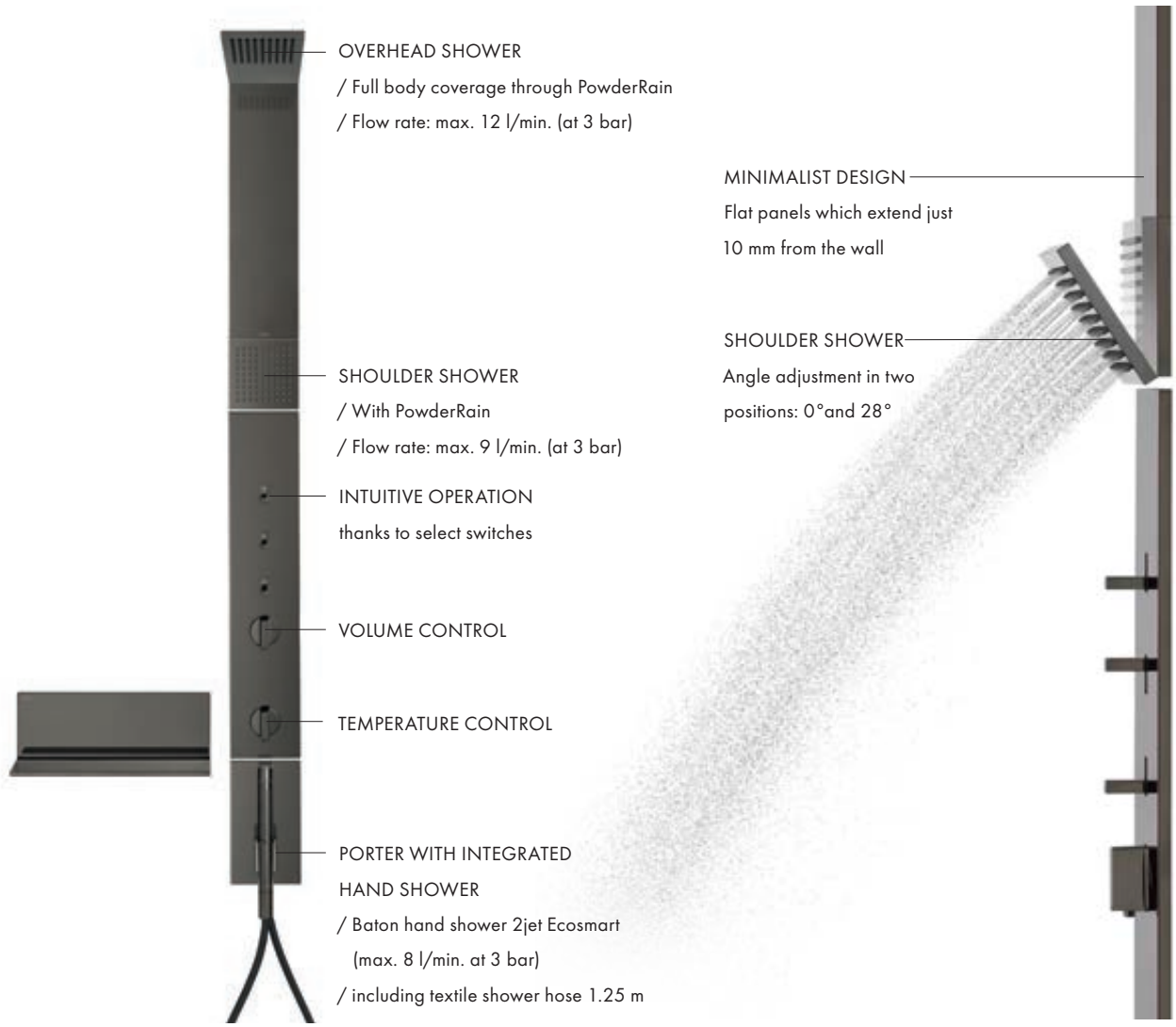

AXOR ShowerComposition features a reduced, rectilinear design, the diminutive depth of the showerhead and vertical panels (which extend just 10mm from the wall) counterbalanced by their generous width. Versatile and easy to install, the AXOR ShowerComposition program is available in a variety of configurations and in the full range of exclusive AXOR FinishPlus surfaces, including Matt Black.

Overhead shower module 110/220 1jet

Features

/ shower head size: 110 x 220 mm
/ spray type: PowderRain
/ projection 425 mm
/ material spray disc: metal
/ shower arm length 324 mm
/ maximum flow rate at 3 bar: 11,2 l/min
/ flow rate PowderRain spray (at 3 bar): 11,2 l/min
/ function from: 8,5 l/min
/ minimum flow pressure: 1,7 bar
/ installation: wall
/ mounting type: concealed
/ connection dimension: DN15
/ connection type: basic set
/ suitable for continous flow water heaters

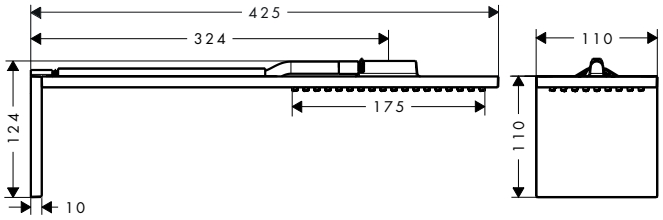

Technologies

Quick Clean

Spray types

Powder Rain

Finish	Available from	Code no.
Chrome		12592000
Matt Black	Q1/2024	12592670
AXOR FinishPlus*		12592XXX

Required parts:	Code no.
Basic set for overhead shower with shower arm	35361180

Shower modules 2jet, 1jet with shoulder shower

Features of all variants

/ consists of: overhead shower, shoulder shower
/ material spray disc: metal
/ spraytype shoulder shower: PowderRain
/ max. operating pressure: 6 bar
/ connection type: basic set

250/250

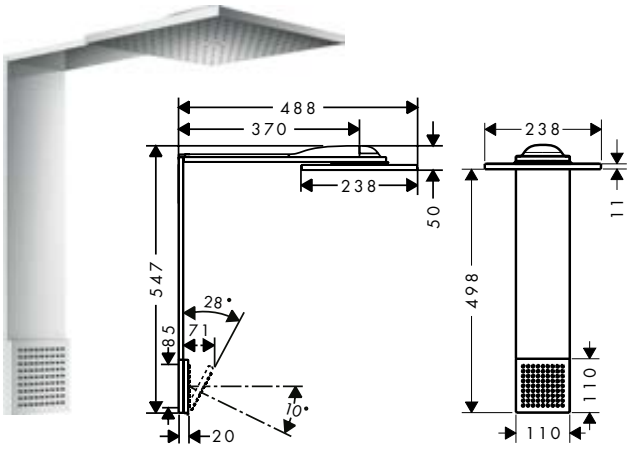

110/220

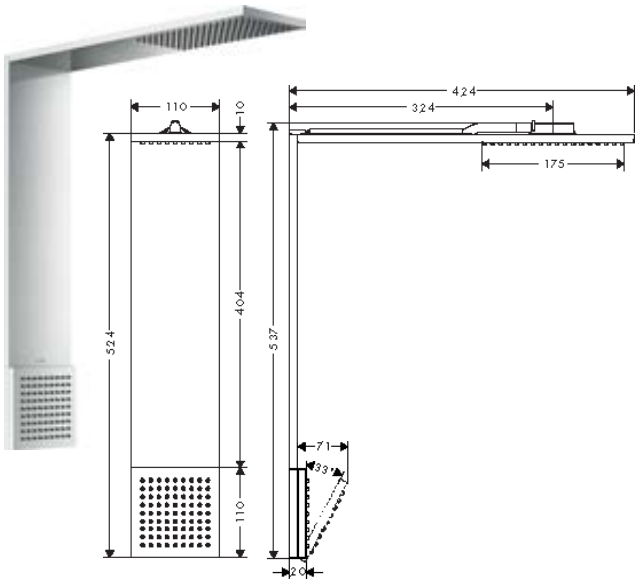

Technologies

Quick Clean

Spray types

Powder Rain
Intense Powder Rain

Overview variants

Shower head size	Number of sprays	Spray types overhead shower	Spray types shoulder shower	Max. flow rate at 3 bar (l/min)	Min. flow pressure (bar)	Lenght shower arm (mm)	Finish	Available from	Code no.
250/250	2	Powder-Rain, Intense Powder-Rain	Powder-Rain	21.6	1.8	370	Chrome		12594000
							Matt Black	Q1/2024	12594670
							AXOR FinishPlus*		12594XXX

Measurements within scale drawings are in mm.
Technical specifications and units of measure are subject to change.

Shower modules 2jet, 1jet with shoulder shower

Overview variants

Shower head size	Number of sprays	Spray types overhead shower	Spray types shoulder shower	Max. flow rate at 3 bar (l/min)	Min. flow pressure (bar)	Lenght shower arm (mm)	Finish	Available from	Code no.
110/220	1	Powder-Rain	Powder-Rain	17	2.5	324	Chrome		12593000
							Matt Black	Q1/2024	12593670
							AXOR FinishPlus*		12593XXX

Required parts:	Code no.
Basic set for overhead shower with shower arm	35361180

Shower panel with thermostat, overhead shower 110/220 1jet and shoulder shower

Features

/ consists of: overhead shower, shoulder shower, baton hand shower, shower thermostat, textile shower hose
/ shower head size: 110 x 220 mm
/ spray type overhead shower: PowderRain
/ flow rate PowderRain spray (at 3 bar): 11,6 l/min
/ spray type body shower: PowderRain
/ flow rate of shoulder shower at 3 bar: 6,4 l/min
/ flow rate of hand shower at 3 bar: 12,3 l/min
/ shower arm length: 324 mm
/ minimum flow pressure: 1,5 bar
/ scald protection at 40°
/ adjustable hot water limitation
/ isolated water conduction
/ mounting type: concealed
/ suitable for continuous flow water heaters
/ max. operating pressure: 10 bar
/ maximum flow rate at 3 bar: 21,6 l/min
/ projection: 425 mm
/ use of outlets: simultaneous use of several outlets
/ connection type: basic set
/ Eco-Function: depending on volume flow and installation situation approx. 50% flow rate reduction and integrated shut off function

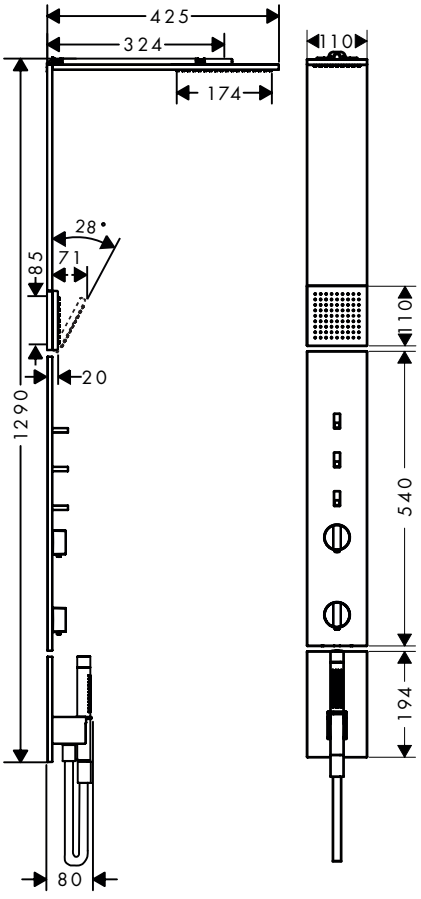

Technologies

Quick Clean

Spray types

Powder Rain | Rain | Mono

Finish	Available from	Code no.
Chrome		12595000
Matt Black	Q1/2024	12595670
AXOR FinishPlus*		12595XXX

Required parts:	Code no.
Basic set for shower panel	12676180

*AXOR FinishPlus: For further AXOR FinishPlus surfaces please see the AXOR FinishPlus overview on page 27.

Shoulder shower 110/110 1jet

Features

/ shower head size: 110 x 110 mm
/ spray type: PowderRain
/ angle of shower adjustable (2 positions)
/ rosette: angular
/ maximum flow rate at 3 bar: 6,8 l/min
/ flow rate PowderRain spray (at 3 bar): 6,8 l/min
/ minimum flow pressure: 1,2 bar
/ operating pressure: min. 1 bar/max. 6 bar
/ suitable for continous flow water heaters
/ connection dimension: DN15
/ material: metal
/ connection type: basic set
/ EU taxonomy: max. 8 l/min - Do No Significant Harm (DNSH)

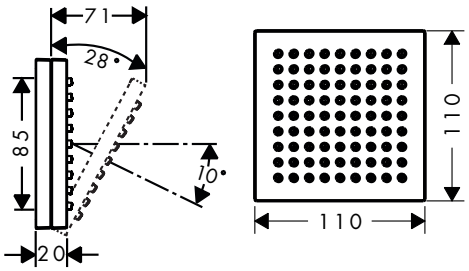

Sustainability

EcoSmart

Technologies

Quick Clean

Spray types

Powder Rain

Finish	Available from	Code no.
Chrome		12596000
Matt Black	Q1/2024	12596670
AXOR FinishPlus*		12596XXX

Required parts:	Code no.
Basic set for overhead shower with shower arm	35361180

Thermostatic modules for concealed installation

Features of all variants

/ consists of: thermostatic module, shower holder, baton hand shower, textile shower hose
/ simultaneous use of several outlets
/ sliding movement of handle for switching water on and off
/ temperature and water flow control
/ depending on volume flow and installation situation approx. 50% flow rate reduction and integrated shut off function
/ thermostat cartridge, Start/stop valve to operate the functions
/ spray type hand shower: Rain, Mono
/ flow rate per outlet: 26 l/min
/ min. operating pressure: 1 bar
/ max. operating pressure: 10 bar
/ Safety stop at 40 °C
/ temperature limitation adjustable
/ non-return valve
/ connection type: basic set

2 functions

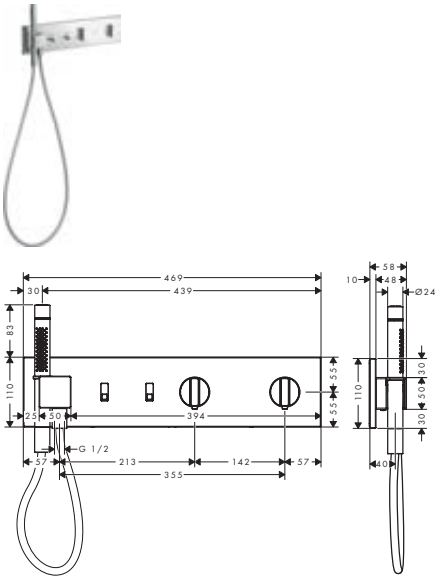

3 functions

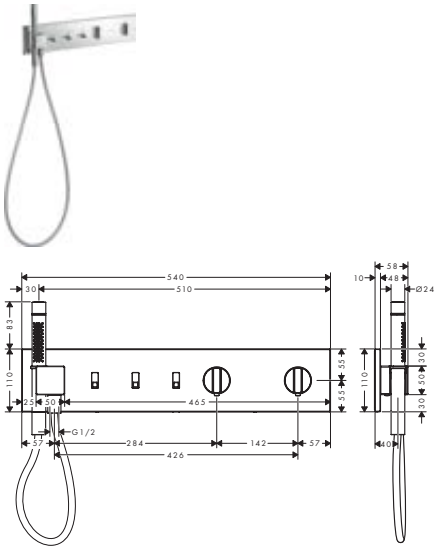

4 functions

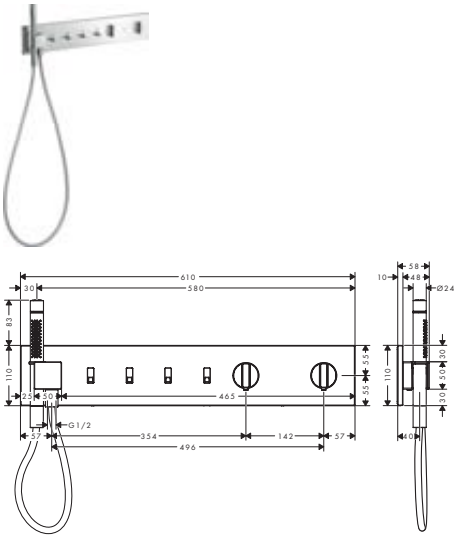

Sustainability

Water Flow Control

Technologies

Safety Stop 40°C

Thermostat

Spray types

Rain

Mono

Measurements within scale drawings are in mm.
Technical specifications and units of measure are subject to change.

Thermostatic modules for concealed installation

Overview variants

Product dimensions (mm)	Number of functions	Flow rate per user	Finish	Available from	Code no.
470/110	2 functions	26	Chrome		12571000
			Matt Black	Q1/2024	12571670
			AXOR FinishPlus*		12571XXX
540/110	3 functions	26	Chrome		12572000
			Matt Black	Q1/2024	12572670
			AXOR FinishPlus*		12572XXX
610/110	4 functions	26	Chrome		12573000
			Matt Black	Q1/2024	12573670
			AXOR FinishPlus*		12573XXX

Required parts:		For	Code no.
	Basic set for thermostatic module Select for 2 functions	12571XXX	18310180
	Basic set for thermostatic module Select for 3 functions	12572XXX	18311180
	Basic set for thermostatic module Select for 4 functions	12573XXX	18312180

*AXOR FinishPlus: For further AXOR FinishPlus surfaces please see the AXOR FinishPlus overview on page 27.

AXOR Showers

Overhead showers	218
Wall plates	240
Body shower / Shower module	241
Hand showers	242
Shower sets	245
Shower holders	251
Porter	253
Shower hoses	255

AXOR SHOWER PRODUCTS REPRESENT DESIGN, INNOVATION AND WATER EXPERIENCES AT THE HIGHEST LEVEL.

AXOR Showers

Excellence in the shower

Three features distinguish the various AXOR shower products: All are luxurious design objects, shape the space definitively and provide fascinating experiences of water. AXOR Showers impart a sense of appreciation for water and for the body.

Design: Philippe Starck, PHOENIX, Nendo, Front, Barber Osgerby

CHARACTERISTIC DESIGN FEATURE:
Avant-garde design objects with universal appeal – for combinations across different collections.

THE DESIGNERS' IDEA:
Luxury in the shower: AXOR Showers offer fascinating design, perfect function and a one-of-a-kind water experience. The user is the focus of the luxurious physical experience provided by an AXOR Shower.

SPECIAL PROGRAM HIGHLIGHTS:
- AXOR ShowerHeaven 1200/300 4jet: Large dimensions and the innovative PowderRain spray mode impart a spa feel
- AXOR LampShower designed by Nendo: A source of light and water
- AXOR Conscious Showers: sustainable water use while setting highest aesthetic standards
- Wide variety of spray modes for various applications: From invigorating to massaging to softly enveloping

Learn more about AXOR Showers:
axor-design.com

AXOR Spray Modes

INTENSE POWDERRAIN

A powerful, concentrated shower spray invigorates the body and mind.

POWDERRAIN

Gentle droplets wrap around the body like a cocoon of water.

RAINAIR

Air-enriched water. For soft shower droplets in a full water jet.

RAIN

Lush, powerful spray with an invigorating effect. Perfect for rinsing hair.

RAINSTREAM

Voluminous beads of water. Precisely compacted into individual, parallel strands.

RAIN XL

A large-scale shower experience – surrounding the entire body.

RAIN/POWDERRAIN

Combination of powerful Rain and gently enveloping PowderRain sprays.

RAINFLOW

Powerful gush spray. Wets the body over a large area, like a waterfall.

MONORAIN

Intense, bundled spray. Pointed refreshment and relaxation.

WHIRLAIR

Concentrated water jet. Especially suited for body massages.

Spray innovation in the shower

The AXOR ShowerHeaven 1200/300 4jet is a new archetype in the shower, offering a grand stage for water. Here, it is staged in an extraordinary way: with a revitalizing water jet, a soothing rain shower, all the way up to the gentle PowderRain – the AXOR innovation in water design. Here, countless velvety-soft water droplets envelop the body like a cocoon of water.

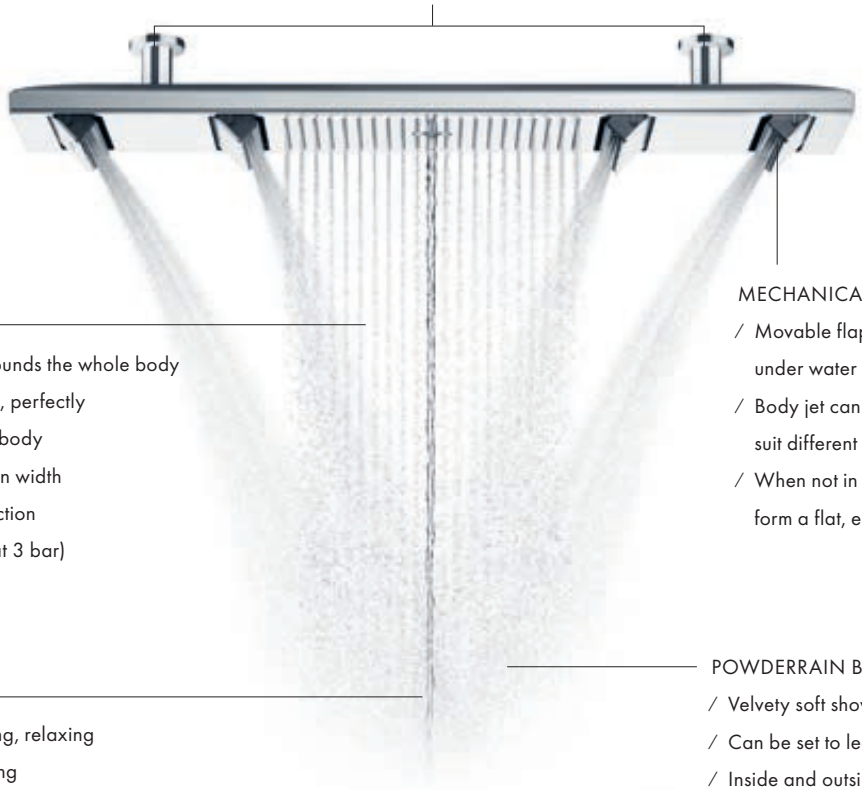

EXTENSION SET
/ The optional extension set (# 13603000) makes the product appear to float, providing a sense of weightlessness

RAIN JET
/ Shower rain that surrounds the whole body
/ Geometric spray field, perfectly adapted to the user's body
/ Spray field, 460 mm in width
/ With QuickClean function
/ Flow rate: 16 l/min (at 3 bar)

MECHANICAL WINGS
/ Movable flaps that open under water pressure
/ Body jet can be angled to suit different user heights
/ When not in use, the flaps close to form a flat, easy to clean surface

MONO JET
/ Concentrated, soothing, relaxing jet for a real spa feeling
/ Flow rate: 15 l/min (at 3 bar)

POWDERRAIN BODY SPRAY
/ Velvety soft shower rain
/ Can be set to leave the head dry
/ Inside and outside flaps controlled separately
/ With QuickClean function
/ Flow rate: approx. 12 l/min (at 3 bar)

USING THE RESOURCE OF WATER WISELY
/ Flow rate: max. 30 l/min (at 3 bar) if all outlets are used simultaneously
/ Water supply assisted with DN15 standard connection

Monolithic design for the shower

The AXOR One overhead showers and hand showers feature monolithic forms and an innovative organization of Rain and PowderRain spray types, reflected in the distinctive graphic language of the showerhead's spray disc. Available in 1jet and 2jet versions, the overhead shower 280 offers both spray types.

POWDERRAIN
/ 5 inner spray circles build a caressing PowderRain spray

RAIN SPRAY
/ 5 separate spray circles result in a body covering shower experience

The AXOR One overhead shower 75 1jet is configured as a shoulder shower with a flow rate of max. 8,7 l/min. (at 3 bar)

Purist design combined with a fascinating water experience in the shower

Purist design – based on the circle and square – characterizes the circular version of the AXOR overhead showers with diameters of 250 mm and 300 mm and the square versions of 250/250 mm and 300/300 mm. All versions are made for universal use and are compatible with every luxury shower design. Clear geometric forms with flat surfaces are the style-defining element throughout – from the spray disc to the ceiling or wall cover plate. Made of high-quality metal – with a bright Chrome surface or finished with one of the many special AXOR FinishPlus surfaces – the showers are perfect design elements for the bathroom. Inside: a technical masterpiece. The specially developed spray nozzles only become visible when the water is on and disappear again when the shower is switched off. This technology is based on water pressure and functions without any additional mechanism.

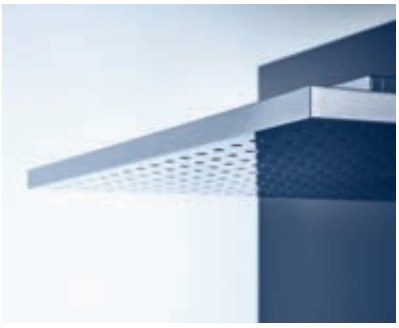

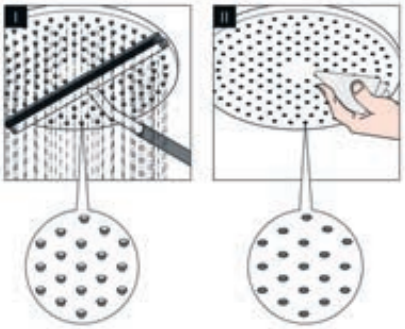

The dynamic spray nozzles emphasize the purist design of the high-quality metal spray disc. Because the disc has a flat surface without silicone naps, water droplets and limescale deposits can be easily removed from the spray disc with a towel or squeegee scraper. Thanks to the QuickClean function, limescale deposits can be simply wiped from the silicone naps. The bayonet connection allows the shower head to be easily removed, e.g. to be placed in solution to remove calcium deposits.

The integrated ServiceCard contains the shower filters. No tools are required to remove the overhead shower to clean the filters because the ServiceCard allows simple, efficient access to them. This makes necessary occasional maintenance more efficient and saves operating costs.

PowderRain

Intense PowderRain

PowderRain + Intense PowderRain

Innovative PowderRain and Intense PowderRain spray modes: PowderRain provides a fine rain shower (flow rate: 16–20 l/min at 3 bar) that feels like an enveloping cocoon of water. Or Intense PowderRain – a powerful spray jet (flow rate: 15–18 l/min at 3 bar) and a true innovation among the 2jet versions.

A source of light and water

The AXOR LampShower designed by Nendo integrates lighting with the shower to form an exclusive design object. The integrated lighting blurs the lines that normally divide a space to bring a sense of coziness to the shower. A wide wreath of rain completely surrounds the body with water.

SPRAY DISC
/ Made of pure metal
/ Diameter 275 mm
/ Can be removed for easy cleaning

LIGHTING
/ Energy-efficient LED illuminant (4 W)
/ Power supply: Input voltage 100–240 V AC, 50–60 Hz/output voltage 12 V DC
/ Incl. power supply unit 12 V, 12 W
/ Color temperature warm white 2,700 K
/ Power supply: 7 m connection cable with power supply unit 12 V
/ Lighting controlled by a separate switch outside the shower

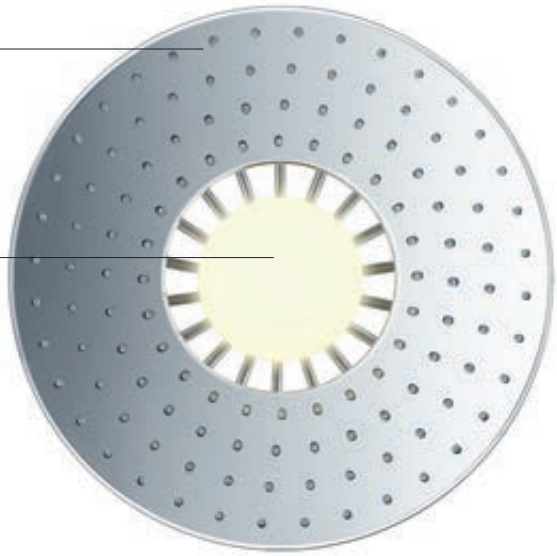

SHOWER ARM
/ Length 380 mm, can swivel horizontally in a range of 150°
/ Perfect shower jet alignment

BALL JOINT
/ Can be adjusted by 5° for the ideal spray direction

SPRAY MODE
/ Gentle rain jet for an exceptional shower experience
/ With QuickClean function
/ Flow rate:13 l/min (at 3 bar)

AXOR Conscious Showers. Water is precious.

Delightful showers are some of the most precious moments in our daily routines. To make a ritual like this as pleasant as it is responsible, AXOR has developed Conscious Showers. All shower products in this range are characterized by low water consumption, starting from 6 l/min.

AXOR Conscious Showers meet the specific requirements for sustainable use of the precious element of water, while satisfying even the highest aesthetic demands. Whether in round or square design, they can be combined with AXOR bathroom collections in a variety of styles.

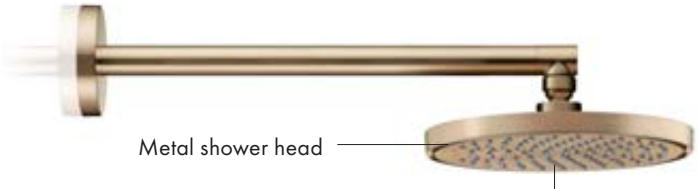

AXOR Overhead Shower 220 1jet

AXOR Overhead Shower 245/180 1jet

AXOR Overhead Shower 245 1jet

ShowerHeaven 1200/300 4jet with lighting

Features of all variants

/ shower head size: 1200 x 300 mm
/ spray type: PowderRain, Rain, Mono
/ material spray disc: metal
/ brass ceilling connector
/ ceiling connection length: 100 mm
/ maximum flow rate at 3 bar: 30 l/min
/ flow rate PowderRain spray outer (at 3 bar): 12 l/min
/ flow rate PowderRain spray inner (at 3 bar): 12 l/min
/ flow rate Rain spray (at 3 bar): 16 l/min
/ flow rate Mono spray (at 3 bar): 15 l/min
/ minimum flow pressure: 3 bar
/ spray types can be activated individually or in combination
/ overhead shower removable for cleaning
/ extendable flaps can be opened manually
/ installation: ceiling, extendable claps can be pre-set to the user size
/ connection dimension: DN15
/ connection type: basic set
/ with integrated lighting
/ illuminant: LED
/ power supply: 24 V
/ transformer power supply, 24 V, 30 W
/ input voltage: 100 - 240 V AC / 50 / 60 Hz
/ output voltage: 24 V DC
/ Light color: neutral white
/ not suitable for continuous flow water heaters

Technologies

Spray types

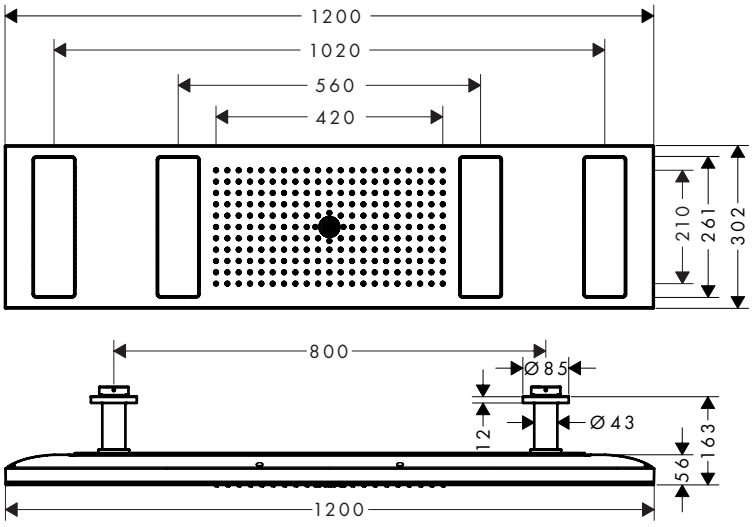

Overview variants

Shower head size	Number of sprays	Spray types	Max. flow rate at 3 bar (l/min)	Min. flow pressure (bar)	Colour temperature	Transformer power supply	Fullfilling EU Eco design guideline	Finish	Available from	Code no.
1200/300	4	Powder-Rain, Rain, Mono	30	3	3500 K	24 V, 30 W	■	Chrome	Q2/2024	12427000
								AXOR FinishPlus*		12427XXX
1200/300	4	Powder-Rain, Rain, Mono	30	3	5000 K	24 V, 30 W	■	Chrome	Q2/2024	12423000
								AXOR FinishPlus*		12423XXX

Required parts:	Code no.
AXOR ShowerSolutions Basic set for ShowerHeaven 1200/300 4jet with light module	12922180

Measurements within scale drawings are in mm.
Technical specifications and units of measure are subject to change.

ShowerHeaven 1200/300 4jet without lighting

Features

/ shower head size: 1200 x 300 mm
/ spray type: PowderRain, Rain, Mono
/ material spray disc: metal
/ brass ceilling connector
/ ceiling connection length: 100 mm
/ maximum flow rate at 3 bar: 30 l/min
/ flow rate PowderRain spray outer (at 3 bar): 11 l/min
/ flow rate PowderRain spray inner (at 3 bar): 12 l/min
/ flow rate Rain spray (at 3 bar): 16 l/min
/ flow rate Mono spray (at 3 bar): 14 l/min
/ minimum flow pressure: 3 bar
/ spray types can be activated individually or in combination
/ overhead shower removable for cleaning
/ extendable flaps can be opened manually
/ installation: ceiling, extendable claps can be pre-set to the user size
/ connection dimension: DN15
/ connection type: basic set
/ not suitable for continuous flow water heaters
/ TÜV certified

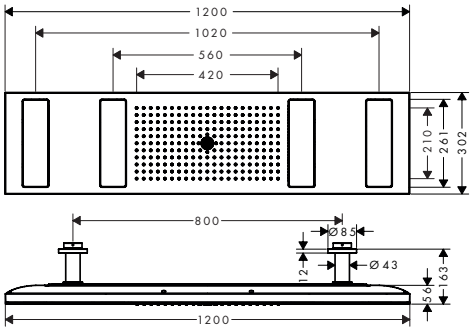

Technologies

Quick Clean

Spray types

Powder Rain | Rain | Mono

Finish	Code no.
Chrome	10637000
AXOR FinishPlus*	10637XXX

ShowerHeaven 3jet with lighting

Features of all variants

/ spray type: RainAir, Rain, Mono
/ frame: brushed stainless steel
/ material spray disc: metal
/ spray disc surface: polished stainless steel
/ minimum flow pressure: 2,5 bar
/ spray types can be activated individually or in combination, the 3 spray zones must be controlled via 3 valves or a diverter valve with 3 outlets
/ spray zones: Bodyzone - outer overhead shower zone, Rainzone - inner overhead shower zone with AirPower function, Mono spray at Ø 17 mm
/ installation: ceiling
/ connection dimension: DN20
/ with integrated lighting
/ illuminant: LED
/ power supply: 12 V
/ transformer power supply for concealed installation 12 V, 18 W
/ input voltage: 100 - 240 V AC / 50 / 60 Hz
/ output voltage: 12 V DC
/ colour temperature: 2700 K
/ Light color: warm white
/ energy efficiency class: contains light sources of energy efficiency class G
/ not suitable for continuous flow water heaters
/ TÜV certified

970/970

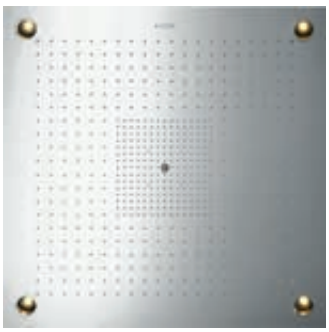

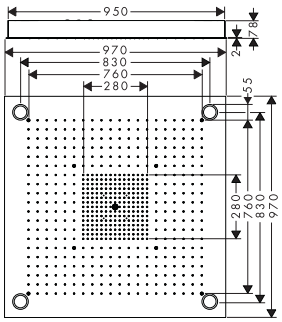

720/720

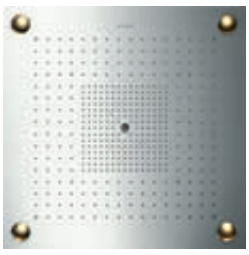

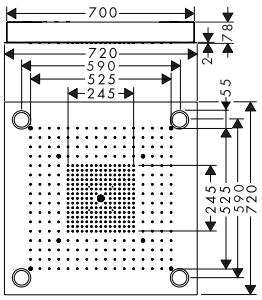

Technologies

Quick Clean | AirPower

Spray types

Rain Air | Rain | Mono

Overview variants

Shoulder shower size	Number of sprays	Spray types	Max. flow rate at 3 bar (l/min)	Min. flow pressure (bar)	Finish	LVI-nro	Code no.
970/970	3	RainAir, Rain, Mono	33.3	2.5	Stainless Steel Optic	6559012	10623800
720/720	3	RainAir, Rain, Mono	36.8	2.5	Stainless Steel Optic	6559014	10627800

*AXOR FinishPlus: For further AXOR FinishPlus surfaces please see the AXOR FinishPlus overview on page 27.

ShowerHeaven 3jet without lighting

Features of all variants

/ spray type: RainAir, Rain, Mono
/ frame: brushed stainless steel
/ material spray disc: metal
/ spray disc surface: polished stainless steel
/ minimum flow pressure: 2,5 bar
/ the 3 spray zones must be controlled via 3 valves or a diverter valve with 3 outlets, spray types can be activated individually or in combination
/ spray zones: Bodyzone - outer overhead shower zone, Rainzone - inner overhead shower zone with AirPower function, Mono spray at Ø 17 mm
/ installation: ceiling
/ connection dimension: DN20
/ not suitable for continuous flow water heaters
/ TÜV certified

970/970

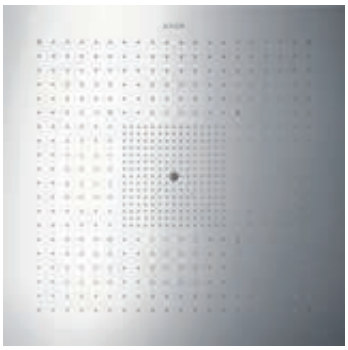

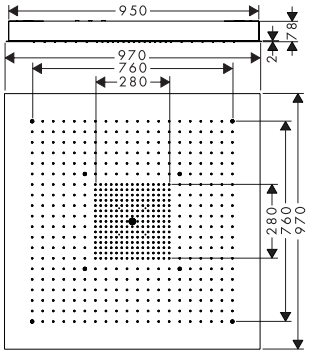

720/720

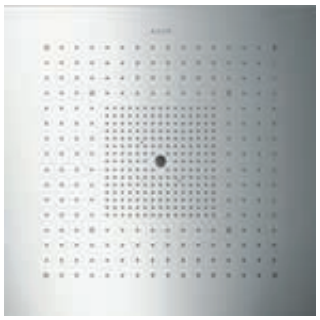

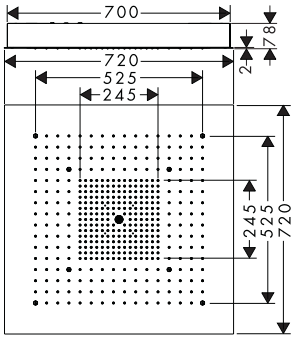

Technologies

Quick Clean | AirPower

Spray types

Rain Air | Rain | Mono

Overview variants

Shoulder shower size	Number of sprays	Spray types	Max. flow rate at 3 bar (l/min)	Min. flow pressure (bar)	Finish	LVI-nro	Code no.
970/970	3	RainAir, Rain, Mono	42	2.5	Stainless Steel Optic	6559011	10621800
720/720	3	RainAir, Rain, Mono	43	2.5	Stainless Steel Optic	6559013	10625800

Overhead shower 75 1jet EcoSmart with shower arm

Features

/ consists of: overhead shower, shower arm
/ shower head size: 73 mm
/ spray type: PowderRain
/ projection 116 mm
/ ball-joint: overhead shower angle adjustable
/ material spray disc: metal
/ shower arm length 85 mm
/ maximum flow rate at 3 bar: 8,7 l/min
/ flow rate PowderRain spray (at 3 bar): 8,7 l/min
/ function from: 6,3 l/min
/ minimum flow pressure: 1 bar
/ overhead shower removable for cleaning
/ installation: wall
/ connection thread G ½
/ connection dimension: DN15
/ suitable for continous flow water heaters

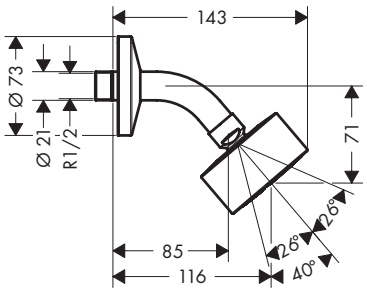

Sustainability

EcoSmart

Technologies

Quick Clean

Spray types

Powder Rain

Finish	Code no.
Chrome	48490000
Matt Black	48490670
Matt White	48490700
AXOR FinishPlus*	48490XXX

Measurements within scale drawings are in mm.
Technical specifications and units of measure are subject to change.

Overhead shower 2jet, 1jet with shower arm

2 spray types

1 spray type

Technologies

Spray types

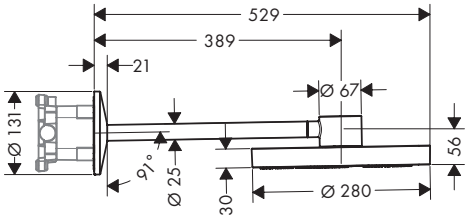

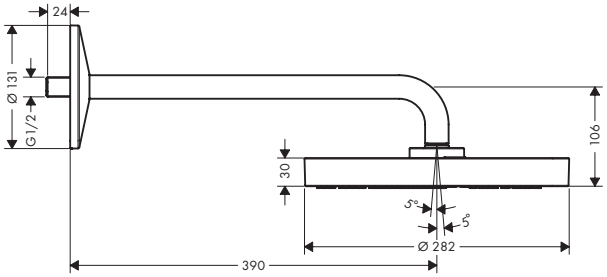

Overview variants

Shower head size	Number of sprays	Spray types	Max. flow rate at 3 bar (l/min)	Min. flow pressure (bar)	Lenght shower arm (mm)	Finish	Code no.
280	2	PowderRain, Rain	12	1.5	389	Chrome	48492000
						Matt Black	48492670
						Matt White	48492700
						AXOR FinishPlus*	48492XXX
280	1	PowderRain and Rain in combination	12.3	1.2	390	Chrome	48491000
						Matt Black	48491670
						Matt White	48491700
						AXOR FinishPlus*	48491XXX

Required parts:	For	Code no.
AXOR ShowerSolutions Basic set for overhead shower with shower arm	48492XXX	35361180

*AXOR FinishPlus: For further AXOR FinishPlus surfaces please see the AXOR FinishPlus overview on page 27.

Overhead showers 2jet, 1jet with ceiling connector

Features of all variants

/ consists of: overhead shower, ceiling connector
/ shower head size: 280 mm
/ material spray disc: metal
/ brass ceilling connector
/ overhead shower removable for cleaning
/ installation: ceiling
/ connection dimension: DN15
/ suitable for continous flow water heaters

2 spray types

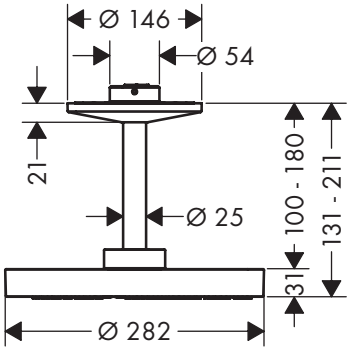

1 spray type

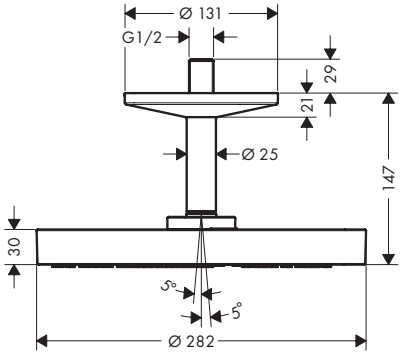

Technologies

Quick Clean

Spray types

Powder Rain

Rain

Overview variants

Shower head size	Number of sprays	Spray types	Max. flow rate at 3 bar (l/min)	Min. flow pressure (bar)	Finish	Code no.
280	2	PowderRain, Rain	18	1.5	Chrome	48494000
					Matt Black	48494670
					Matt White	48494700
					AXOR FinishPlus*	48494XXX
280	1	PowderRain and Rain in combination	12.2	1.4	Chrome	48493000
					Matt Black	48493670
					Matt White	48493700
					AXOR FinishPlus*	48493XXX

Required parts:	For	Code no.
AXOR ShowerSolutions Basic set for overhead shower with ceiling connector	48494XXX	26434180

Measurements within scale drawings are in mm.
Technical specifications and units of measure are subject to change.

Overhead shower 2jet, 1jet with shower arm

Features of all variants

/ consists of: overhead shower, shower arm
/ dynamic spray nozzles move out while using
/ material spray disc: metal
/ shower arm length 450 mm
/ overhead shower removable for cleaning
/ ServiceCard with sieve can be removed without tools for cleaning porpose
/ installation: wall
/ connection dimension: DN15

300

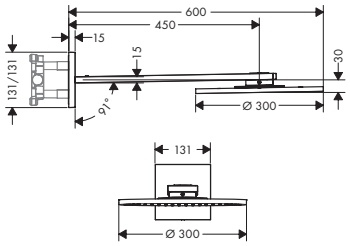

250

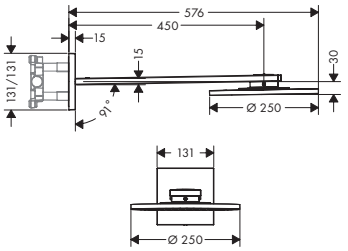

Technologies

Quick Clean

Spray types

Powder Rain | Intense Powder Rain

Overview variants

Shower head size	Number of sprays	Spray types	Max. flow rate at 3 bar (l/min)	Min. flow pressure (bar)	Connection	Finish	Code no.
300	2	PowderRain, Intense PowderRain	19	2	basic set	Chrome	35303000
						Matt Black	35303670
						AXOR FinishPlus*	35303XXX
300	1	PowderRain	17.6	1.9	G ½	Chrome	35300000
						Matt Black	35300670
						AXOR FinishPlus*	35300XXX
250	2	PowderRain, Intense PowderRain	19	2	basic set	Chrome	35296000
						AXOR FinishPlus*	35296XXX
250	1	PowderRain	18.1	1.5	G ½	Chrome	35284000
						AXOR FinishPlus*	35284XXX

Required parts:		For	Code no.
	AXOR ShowerSolutions Basic set for overhead shower with shower arm	35303XXX 35296XXX	35361180

Overhead showers 2jet, 1jet with ceiling connector

Features of all variants

/ consists of: overhead shower, ceiling connector
/ dynamic spray nozzles move out while using
/ material spray disc: metal
/ brass ceilling connector
/ ceiling connection length: 100 mm
/ overhead shower removable for cleaning
/ ServiceCard with sieve can be removed without tools for cleaning porpose
/ installation: ceiling
/ connection dimension: DN15
/ connection type: basic set
/ suitable for continous flow water heaters

300

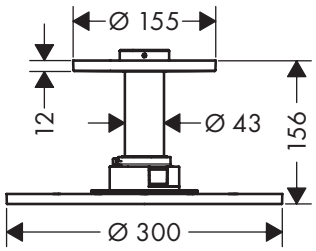

250

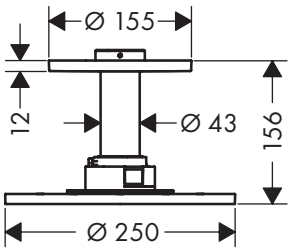

Technologies

Quick Clean

Spray types

Powder Rain | Intense Powder Rain

For more information about this product, please see the next page.

*AXOR FinishPlus: For further AXOR FinishPlus surfaces please see the AXOR FinishPlus overview on page 27.

Overhead showers 2jet, 1jet with ceiling connector

Overview variants

Shoulder shower size	Number of sprays	Spray types	Max. flow rate at 3 bar (l/min)	Min. flow pressure (bar)	Finish	Code no.
300	1	PowderRain	19	1.8	Chrome	35301000
					Matt Black	35301670
					AXOR FinishPlus*	35301XXX
300	2	PowderRain, Intense PowderRain	18	2.4	Chrome	35304000
					Matt Black	35304670
					AXOR FinishPlus*	35304XXX
250	1	PowderRain	19	1.8	Chrome	35286000
					AXOR FinishPlus*	35286XXX
250	2	PowderRain, Intense PowderRain	18	1.7	Chrome	35297000
					AXOR FinishPlus*	35297XXX

Required parts:	Code no.
AXOR ShowerSolutions Basic set for overhead shower with ceiling connector	26434180

Overhead showers 2jet, 1jet ceiling

Features of all variants

/ dynamic spray nozzles move out while using
/ material spray disc: metal
/ overhead shower removable for cleaning
/ installation: flush with the ceiling
/ connection dimension: DN15
/ suitable for continous flow water heaters

300

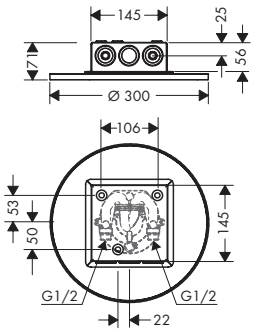

250

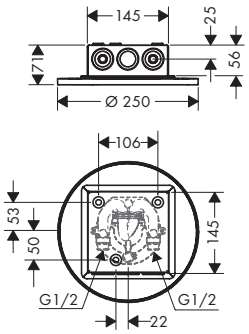

Technologies

Quick Clean

Spray types

Powder Rain | Intense Powder Rain

Overview variants

Shower head size	Number of sprays	Spray types	Max. flow rate at 3 bar (l/min)	Min. flow pressure (bar)	Connection	Finish	Code no.
300	2	PowderRain, Intense Powder-Rain	17	1.5	basic set	Chrome	35305000
						Matt Black	35305670
						AXOR FinishPlus*	35305XXX
300	1	PowderRain	18.1	1.8	G ½	Chrome	35302000
						Matt Black	35302670
						AXOR FinishPlus*	35302XXX
250	2	PowderRain, Intense Powder-Rain	21	1.5	basic set	Chrome	35298000
						AXOR FinishPlus*	35298XXX
250	1	PowderRain	17.7	1.5	G ½	Chrome	35287000
						AXOR FinishPlus*	35287XXX

Required parts:	Code no.
AXOR ShowerSolutions Basic set for overhead shower ceiling	35363180

Measurements within scale drawings are in mm.
Technical specifications and units of measure are subject to change.

Overhead shower 2jet, 1jet with shower arm

Features of all variants

/ consists of: overhead shower, shower arm
/ dynamic spray nozzles move out while using
/ material spray disc: metal
/ shower arm length 450 mm
/ overhead shower removable for cleaning
/ ServiceCard with sieve can be removed without tools for cleaning porpose
/ installation: wall
/ connection dimension: DN15
/ suitable for continous flow water heaters

300/300

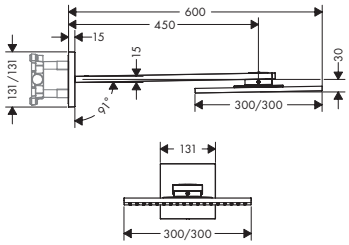

250/250

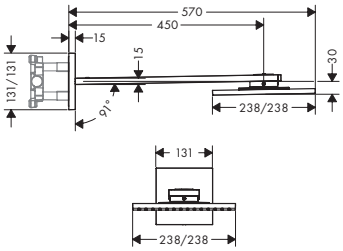

Technologies

Quick Clean

Spray types

Powder Rain | Intense Powder Rain

Certificates/declarations

EPD

Overview variants

Shower head size	Number of sprays	Spray types	Max. flow rate at 3 bar (l/min)	Min. flow pressure (bar)	Connection	Finish	Code no.
300/300	2	PowderRain, Intense PowderRain	19	2	basic set	Chrome	35318000
						AXOR FinishPlus*	35318XXX
300/300	1	PowderRain	18.2	2	G ½	Chrome	35314000
						AXOR FinishPlus*	35314XXX
250/250	2	PowderRain, Intense PowderRain	19	2	basic set	Chrome	35310000
						AXOR FinishPlus*	35310XXX
250/250	1	PowderRain	17	1.8	G ½	Chrome	35306000
						AXOR FinishPlus*	35306XXX

Required parts:		For	Code no.
	AXOR ShowerSolutions Basic set for overhead shower with shower arm	35318XXX 35310XXX	35361180

Overhead showers 2jet, 1jet with ceiling connector

Features of all variants

/ consists of: overhead shower, ceiling connector
/ dynamic spray nozzles move out while using
/ material spray disc: metal
/ brass ceilling connector
/ ceiling connection length: 100 mm
/ overhead shower removable for cleaning
/ ServiceCard with sieve can be removed without tools for cleaning porpose
/ installation: ceiling
/ connection dimension: DN15
/ connection type: basic set
/ suitable for continous flow water heaters

300/300

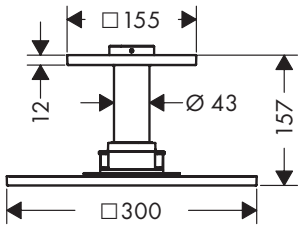

250/250

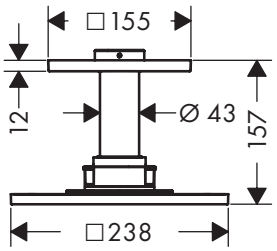

Technologies

Quick Clean

Spray types

Powder Rain | Intense Powder Rain

For more information about this product, please see the next page.

*AXOR FinishPlus: For further AXOR FinishPlus surfaces please see the AXOR FinishPlus overview on page 27.

Overhead showers 2jet, 1jet with ceiling connector

Overview variants

Shoulder shower size	Number of sprays	Spray types	Max. flow rate at 3 bar (l/min)	Min. flow pressure (bar)	Finish	Code no.
300/300	2	PowderRain, Intense PowderRain	18	1.7	Chrome	35320000
					AXOR FinishPlus*	35320XXX
300/300	1	PowderRain	19	1.8	Chrome	35316000
					AXOR FinishPlus*	35316XXX
250/250	2	PowderRain, Intense PowderRain	18	2.2	Chrome	35312000
					AXOR FinishPlus*	35312XXX
250/250	1	PowderRain	19	1.8	Chrome	35308000
					AXOR FinishPlus*	35308XXX

Required parts:	Code no.
AXOR ShowerSolutions Basic set for overhead shower with ceiling connector	26434180

Overhead showers 2jet, 1jet ceiling

Features of all variants

/ dynamic spray nozzles move out while using
/ material spray disc: metal
/ overhead shower removable for cleaning
/ installation: flush with the ceiling
/ connection dimension: DN15
/ connection type: basic set
/ suitable for continous flow water heaters

300/300

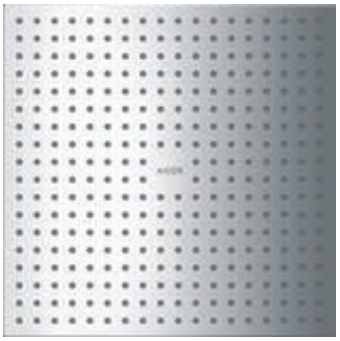

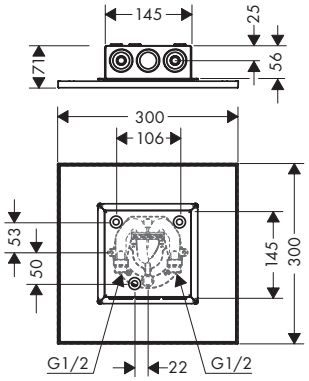

250/250

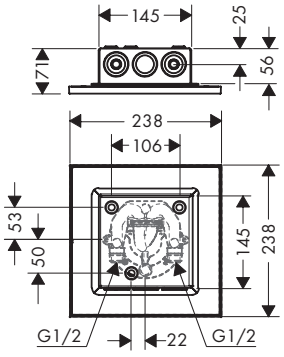

Technologies

Quick Clean

Spray types

Powder Rain | Intense Powder Rain

Overview variants

Shoulder shower size	Number of sprays	Spray types	Max. flow rate at 3 bar (l/min)	Min. flow pressure (bar)	Finish	Code no.
300/300	1	PowderRain	18.1	1.8	Chrome	35317000
					Polished Black Chrome	35317330
					AXOR FinishPlus*	35317XXX
300/300	2	PowderRain, Intense PowderRain	17	1.5	Chrome	35321000
					AXOR FinishPlus*	35321XXX
250/250	1	PowderRain	18.1	1.8	Chrome	35309000
					AXOR FinishPlus*	35309XXX
250/250	2	PowderRain, Intense PowderRain	17	1.5	Chrome	35313000
					AXOR FinishPlus*	35313XXX

Required parts:	Code no.
AXOR ShowerSolutions Basic set for overhead shower ceiling	35363180

Measurements within scale drawings are in mm.
Technical specifications and units of measure are subject to change.

Overhead shower 250/580 3jet

Features

/ consists of: overhead shower, wall connector
/ shower head size: 580 x 260 mm
/ spray type: Rain, RainFlow, Mono
/ material spray disc: metal
/ maximum flow rate at 3 bar: 20 l/min
/ flow rate Rain spray (at 3 bar): 17 l/min
/ flow rate RainFlow spray (at 3 bar): 17 l/min
/ flow rate Mono spray (at 3 bar): 20 l/min
/ minimum flow pressure: 1,7 bar
/ spray disc removable for cleaning
/ installation: wall
/ connection dimension: DN15
/ connection type: basic set
/ suitable for continous flow water heaters
/ pressure: low-medium

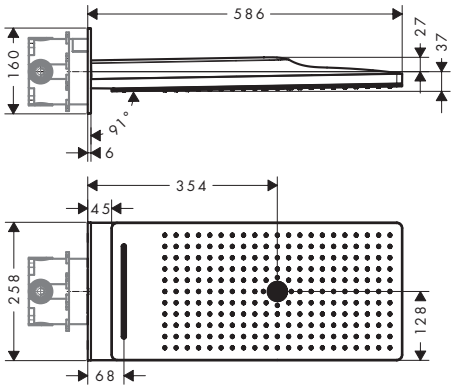

Technologies

Quick Clean

Spray types

Rain | Mono | RainFlow

Finish	Code no.
Chrome	35283000
AXOR FinishPlus*	35283XXX

Required parts:

	Code no.
AXOR iBox universal Basic set	01700180

Overhead shower 3jet, 2jet, 1jet with shower arm

Features of all variants

/ consists of: overhead shower, shower arm, escutcheon
/ material spray disc: metal
/ shower arm length 460 mm
/ minimum flow pressure: 1,5 bar
/ spray disc removable for cleaning
/ overhead shower removable for cleaning
/ connection dimension: DN15
/ suitable for continous flow water heaters

3 spray types

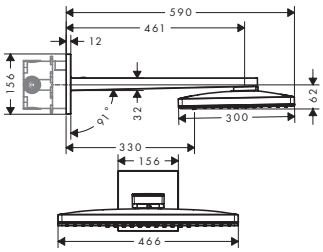

2 spray types

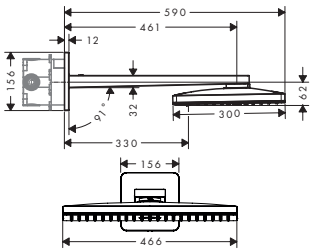

1 spray type

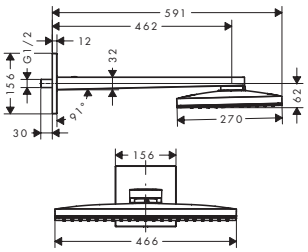

Technologies

Quick Clean

Spray types

Rain | Mono | Rain Stream

Overview variants

Shower head size	Number of sprays	Spray types	Max. flow rate at 3 bar (l/min)	Min. flow pressure (bar)	Escutcheon	Finish	LVI-nro	Code no.
460/300	3	Rain, RainStream, Mono	18	1.5	square	Chrome	6559837	35282000
						AXOR FinishPlus*		35282XXX
460/300	3	Rain, RainStream, Mono	18	1.5	softsquare	Chrome		35276000
						AXOR FinishPlus*		35276XXX

For more information about this product, please see the next page.

*AXOR FinishPlus: For further AXOR FinishPlus surfaces please see the AXOR FinishPlus overview on page 27.

Overhead shower 3jet, 2jet, 1jet with shower arm

Overview variants

Shower head size	Number of sprays	Spray types	Max. flow rate at 3 bar (l/min)	Min. flow pressure (bar)	Escutcheon	Finish	LVI-nro	Code no.
460/300	2	Rain, RainStream	18	1.5	square	Chrome		35280000
						AXOR FinishPlus*		35280XXX
460/300	2	Rain, RainStream	18	1.5	softsquare	Chrome		35275000
						AXOR FinishPlus*		35275XXX
460/270	1	Rain	19	1.5	square	Chrome		35278000
						AXOR FinishPlus*		35278XXX
460/270	1	Rain	19	1.5	softsquare	Chrome		35274000
						AXOR FinishPlus*		35274XXX

Required parts:	For	Code no.
AXOR iBox universal Basic set	35282XXX 35276XXX 35280XXX 35275XXX	01700180

Overhead showers 3jet, 2jet, 1jet with ceiling connector

Features of all variants

/ consists of: overhead shower, ceiling connector
/ material spray disc: metal
/ brass ceilling connector
/ ceiling connection length: 100 mm
/ minimum flow pressure: 1,5 bar
/ spray disc removable for cleaning
/ overhead shower removable for cleaning
/ installation: ceiling
/ connection dimension: DN15
/ connection type: basic set
/ suitable for continous flow water heaters

3 spray types

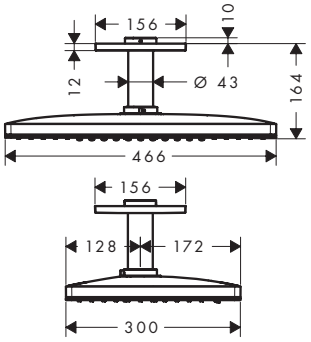

2 spray types

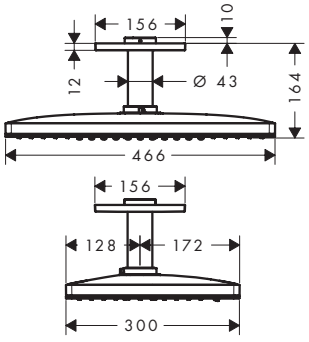

1 spray type

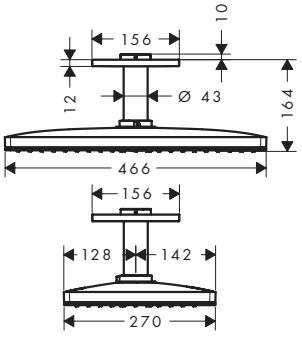

Technologies

Quick Clean

Spray types

Rain | Mono | Rain Stream

Overview variants

Shoulder shower size	Number of sprays	Spray types	Max. flow rate at 3 bar (l/min)	Min. flow pressure (bar)	Finish	Code no.
460/300	3	Rain, RainStream, Mono	23	1.5	Chrome	35281000
					AXOR FinishPlus*	35281XXX
460/300	2	Rain, RainStream	21	1.5	Chrome	35279000
					AXOR FinishPlus*	35279XXX

Measurements within scale drawings are in mm.
Technical specifications and units of measure are subject to change.

Overhead showers 3jet, 2jet, 1jet with ceiling connector

Overview variants

Shoulder shower size	Number of sprays	Spray types	Max. flow rate at 3 bar (l/min)	Min. flow pressure (bar)	Finish	Code no.
460/300	1	Rain	21	1.5	Chrome	35277000
					AXOR FinishPlus*	35277XXX

Required parts:	Code no.
AXOR ShowerSolutions Basic set for overhead shower with ceiling connector	26434180

Overhead shower 350 1jet with shower arm

Features

/ consists of: overhead shower, shower arm
/ shower head size: 350 mm
/ spray type: PowderRain
/ ball-joint: overhead shower angle adjustable
/ material spray disc: metal
/ shower arm length 390 mm
/ maximum flow rate at 3 bar: 26 l/min
/ flow rate PowderRain spray (at 3 bar): 26 l/min
/ minimum flow pressure: 1 bar
/ overhead shower removable for cleaning
/ installation: wall
/ connection thread G ½
/ connection dimension: DN15
/ suitable for continous flow water heaters

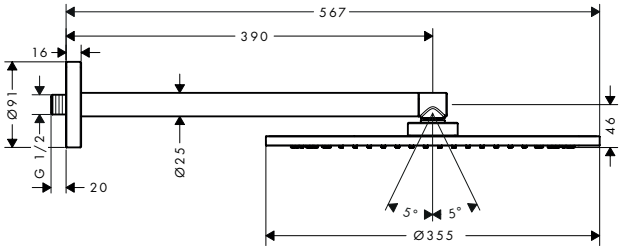

Technologies

Quick Clean

Spray types

Powder Rain

Finish	Code no.
Chrome	26034000
Brushed Nickel	26034820
AXOR FinishPlus*	26034XXX

Overhead shower 350 1jet with ceiling connection

Features

/ consists of: overhead shower, ceiling connector
/ shower head size: 350 mm
/ spray type: PowderRain
/ ball-joint: overhead shower angle adjustable
/ material spray disc: metal
/ brass ceilling connector
/ ceiling connection length: 100 mm
/ maximum flow rate at 3 bar: 26 l/min
/ flow rate PowderRain spray (at 3 bar): 26 l/min
/ minimum flow pressure: 1 bar
/ overhead shower removable for cleaning
/ installation: ceiling
/ connection thread G ½
/ connection dimension: DN15
/ suitable for continous flow water heaters

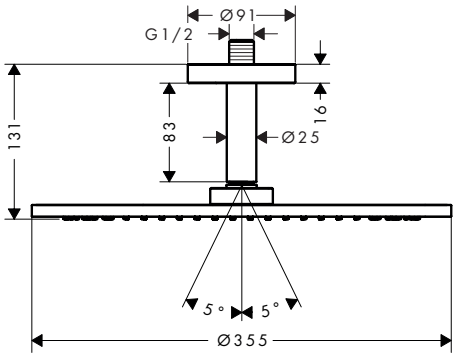

Technologies

Quick Clean

Spray types

Powder Rain

Finish	Code no.
Chrome	26035000
Brushed Nickel	26035820
AXOR FinishPlus*	26035XXX

*AXOR FinishPlus: For further AXOR FinishPlus surfaces please see the AXOR FinishPlus overview on page 27.

Overhead shower 240/240 1jet ceiling integrated

Features

/ shower head size: 240 x 240 mm
/ spray type: RainAir
/ material spray disc: metal
/ maximum flow rate at 3 bar: 12 l/min
/ flow rate RainAir spray (at 3 bar): 12 l/min
/ flow rate expansible to 25 l/min
/ minimum flow pressure: 2 bar
/ spray disc removable for cleaning
/ installation: flush with the ceiling
/ connection thread G ½
/ connection dimension: DN15
/ suitable for continous flow water heaters
/ pressure: medium

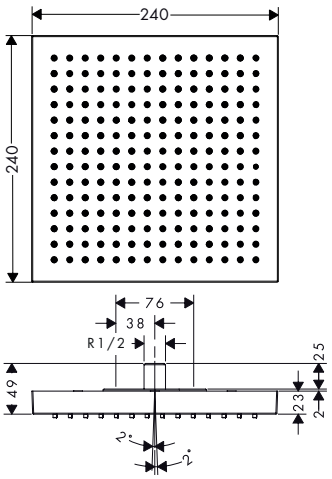

Technologies

Quick Clean · AirPower

Spray types

Rain Air

Certificates/declarations

EPD

Finish	Code no.
Chrome	10924000
AXOR FinishPlus*	10924XXX

Overhead shower 240/240 1jet with ceiling connection

Features

/ consists of: overhead shower, ceiling connector
/ shower head size: 240 x 240 mm
/ spray type: RainAir
/ material spray disc: metal
/ brass ceilling connector
/ ceiling connection length: 102 mm
/ maximum flow rate at 3 bar: 12 l/min
/ flow rate RainAir spray (at 3 bar): 12 l/min
/ flow rate expansible to 25 l/min
/ minimum flow pressure: 2 bar
/ spray disc removable for cleaning
/ installation: ceiling
/ connection thread G ½
/ connection dimension: DN15
/ suitable for continous flow water heaters
/ pressure: medium

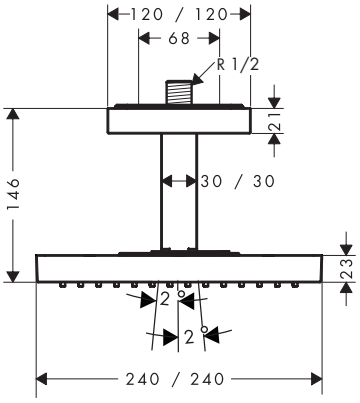

Technologies

Quick Clean · AirPower

Spray types

Rain Air

Finish	Code no.
Chrome	10929000
AXOR FinishPlus*	10929XXX

Measurements within scale drawings are in mm.
Technical specifications and units of measure are subject to change.

Overhead shower 240/240 1jet with shower arm

Features

/ consists of: overhead shower, shower arm, escutcheon
/ shower head size: 240 x 240 mm
/ spray type: RainAir
/ material spray disc: metal
/ shower arm length metal shower arm 411 - 458 mm
/ maximum flow rate at 3 bar: 12 l/min
/ flow rate RainAir spray (at 3 bar): 12 l/min
/ flow rate expansible to 25 l/min
/ minimum flow pressure: 2 bar
/ spray disc removable for cleaning
/ installation: wall
/ connection dimension: DN15
/ suitable for continous flow water heaters
/ pressure: medium

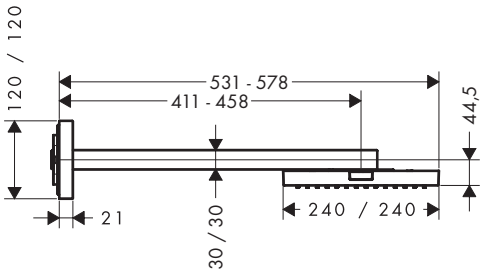

Technologies

Quick Clean | AirPower

Spray types

Rain Air

Finish	Code no.
Chrome	10925000
AXOR FinishPlus*	10925XXX

Required parts: | Code no.

AXOR ShowerSolutions Basic set for overhead shower 240/240 1jet with shower arm — 10921180

Flood spout 240/120 for concealed installation

Features

/ 1 function
/ projection: 180 mm
/ when positioning the spout between waterconducting parts (no.10751000, no.10755000, no.10972000, no.10651000, no.28491000, no.40872000, no.40873000) in joined installation (10 mm distance) it is recommended to use basic set no.10941180
/ can be used as bath spout or flood shower
/ maximum flow rate at 3 bar: 19 l/min
/ connection dimension: DN20
/ spray type: RainFlow

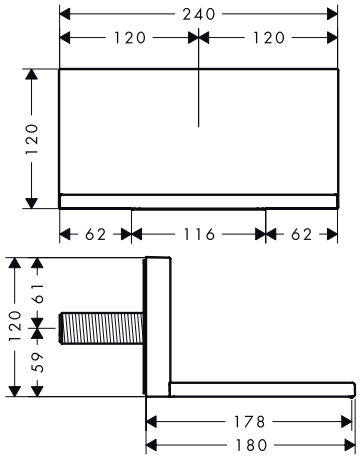

Technologies

Quick Clean

Spray types

RainFlow

Finish	Code no.
Chrome	10942000
AXOR FinishPlus*	10942XXX

*AXOR FinishPlus: For further AXOR FinishPlus surfaces please see the AXOR FinishPlus overview on page 27.

LampShower 275 1jet with ceiling connector

Features

/ consists of: overhead shower, ceiling connector
/ shower head size: 275 mm
/ spray type: Rain
/ ball-joint: overhead shower angle adjustable
/ material spray disc: metal
/ brass ceilling connector
/ ceiling connection length: 120 mm
/ maximum flow rate at 3 bar: 18 l/min
/ flow rate Rain spray (at 3 bar): 18 l/min
/ minimum flow pressure: 2 bar
/ spray zones: special spray image from placed inside spray nozzles on the inner diameter
/ spray disc removable for cleaning
/ installation: ceiling
/ connection thread G ½
/ connection dimension: DN15
/ with integrated lighting
/ illuminant: LED
/ power supply: 12 V
/ transformer power supply for concealed installation 12 V, 18 W
/ input voltage: 100 - 240 V AC / 50 / 60 Hz
/ output voltage: 12 V DC
/ colour temperature: 2700 K
/ energy efficiency class: contains a light source of energy efficiency class G
/ not suitable for continuous flow water heaters
/ TÜV certified

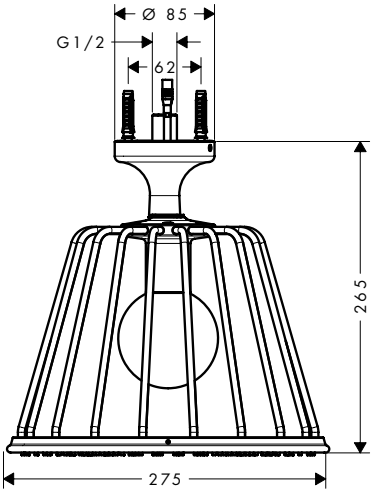

Technologies

Quick Clean

Spray types

Rain

Finish	Code no.
Chrome	26032000
AXOR FinishPlus*	26032XXX

LampShower 275 1jet with shower arm

Features

/ consists of: overhead shower, shower arm
/ shower head size: 275 mm
/ spray type: Rain
/ ball-joint: overhead shower angle adjustable
/ material spray disc: metal
/ shower arm length 380 mm
/ shower arm swivels by 150°
/ maximum flow rate at 3 bar: 13 l/min
/ flow rate Rain spray (at 3 bar): 13 l/min
/ minimum flow pressure: 2 bar
/ spray zones: special spray image from placed inside spray nozzles on the inner diameter
/ spray disc removable for cleaning
/ installation: wall
/ connection thread G ½
/ connection dimension: DN15
/ with integrated lighting
/ illuminant: LED
/ power supply: 12 V
/ transformer power supply for concealed installation 12 V, 18 W
/ input voltage: 100 - 240 V AC / 50 / 60 Hz
/ output voltage: 12 V DC
/ colour temperature: 2700 K
/ energy efficiency class: contains a light source of energy efficiency class G
/ not suitable for continuous flow water heaters
/ TÜV certified
/ pressure: medium

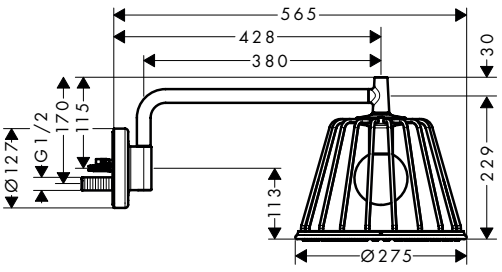

Technologies

Quick Clean

Spray types

Rain

Finish	Code no.
Chrome	26031000
AXOR FinishPlus*	26031XXX

Measurements within scale drawings are in mm.
Technical specifications and units of measure are subject to change.

Overhead shower 240 2jet with ceiling connector

Features

/ consists of: overhead shower, ceiling connector
/ shower head size: 279 mm
/ spray type: Rain, RainAir
/ Select button on overhead shower
/ ball-joint: overhead shower angle adjustable
/ material spray disc: metal
/ brass ceilling connector
/ ceiling connection length: 139 mm
/ maximum flow rate at 3 bar: 17 l/min
/ flow rate Rain spray (at 3 bar): 17 l/min
/ flow rate RainAir spray (at 3 bar): 16 l/min
/ minimum flow pressure: 1 bar
/ spray disc removable for cleaning
/ installation: ceiling
/ connection thread G ½
/ connection dimension: DN15
/ suitable for continous flow water heaters

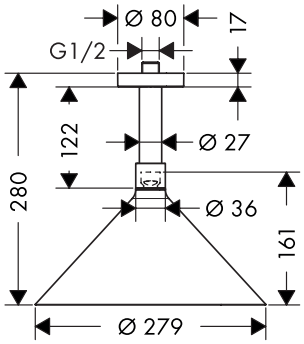

Technologies

Spray types

Finish	Code no.
Chrome	26022000
AXOR FinishPlus*	26022XXX

Overhead shower 240 2jet with shower arm

Features

/ consists of: overhead shower, shower arm
/ shower head size: 279 mm
/ spray type: Rain, RainAir
/ Select button on overhead shower
/ ball-joint: overhead shower angle adjustable
/ material spray disc: metal
/ shower arm length 400 mm
/ shower arm swivels by 150°
/ maximum flow rate at 3 bar: 15 l/min
/ flow rate Rain spray (at 3 bar): 15 l/min
/ flow rate RainAir spray (at 3 bar): 15 l/min
/ function from: 8 l/min
/ minimum flow pressure: 1 bar
/ spray disc removable for cleaning
/ installation: wall
/ connection thread G ½
/ connection dimension: DN15
/ suitable for continous flow water heaters
/ pressure: low

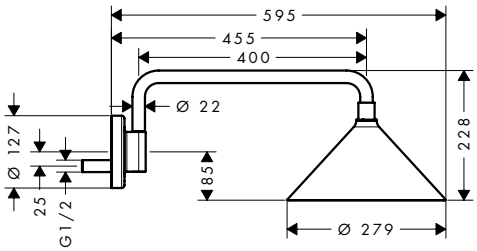

Technologies

Spray types

Finish	Code no.
Chrome	26021000
AXOR FinishPlus*	26021XXX

*AXOR FinishPlus: For further AXOR FinishPlus surfaces please see the AXOR FinishPlus overview on page 27.

Overhead showers 1jet

Features of all variants

/ shower head size: 245 x 185 mm
/ spray type: Rain
/ ball-joint: overhead shower angle adjustable
/ material spray disc: metal
/ overhead shower removable for cleaning
/ installation: ceiling or wall
/ connection thread G ½
/ suitable for continous flow water heaters

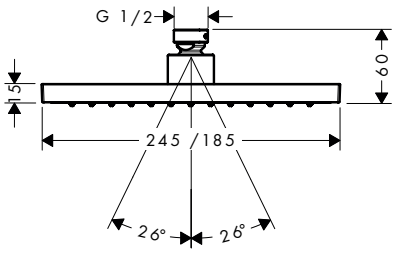

Sustainability

Technologies

Spray types

Overview variants

Shoulder shower size	Number of sprays	Spray types	Max. flow rate at 3 bar (l/min)	Min. flow pressure (bar)	Finish	Code no.
245/185	1	Rain	7.4	0.8	Chrome	35374000
					Matt Black	35374670
					AXOR FinishPlus*	35374XXX
245/185	1	Rain	5.2	0.6	Chrome	35387000
					Matt Black	35387670
					AXOR FinishPlus*	35387XXX
245/185	1	Rain	10.1	0.8	Chrome	35373000
					Matt Black	35373670
					AXOR FinishPlus*	35373XXX

Required parts (choose one):	Finish	Code no.
AXOR ShowerSolutions Shower arm 390 mm square	Chrome	26436000
	Matt Black	26436670
	AXOR FinishPlus*	26436XXX
AXOR ShowerSolutions Ceiling connector 100 mm square	Chrome	26437000
	Matt Black	26437670
	AXOR FinishPlus*	26437XXX
AXOR ShowerSolutions Ceiling connector 300 mm square	Chrome	26438000
	Matt Black	26438670
	AXOR FinishPlus*	26438XXX
AXOR ShowerSolutions Shower arm 390 mm softsquare	Chrome	26967000
	Matt Black	26967670
	AXOR FinishPlus*	26967XXX
AXOR ShowerSolutions Ceiling connector 100 mm softsquare	Chrome	26965000
	Matt Black	26965670
	AXOR FinishPlus*	26965XXX
AXOR ShowerSolutions Ceiling connector 300 mm softsquare	Chrome	26966000
	Matt Black	26966670
	AXOR FinishPlus*	26966XXX

Measurements within scale drawings are in mm.
Technical specifications and units of measure are subject to change.

Overhead showers 1jet

Features of all variants

/ shower head size: 220 mm
/ spray type: Rain
/ ball-joint: overhead shower angle adjustable
/ material spray disc: metal
/ overhead shower removable for cleaning
/ installation: ceiling or wall
/ connection thread G ½
/ suitable for continous flow water heaters

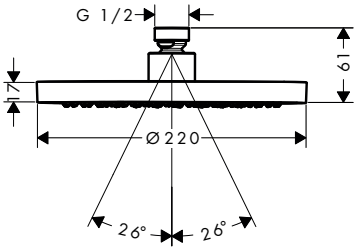

Sustainability

Eco Smart+ | EcoSmart

Technologies

Quick Clean

Spray types

Rain

Overview variants

Shoulder shower size	Number of sprays	Spray types	Max. flow rate at 3 bar (l/min)	Min. flow pressure (bar)	Finish	Code no.
220	1	Rain	7.4	0.8	Chrome	35383000
					Matt Black	35383670
					AXOR FinishPlus*	35383XXX
220	1	Rain	5.6	0.6	Chrome	35388000
					Matt Black	35388670
					AXOR FinishPlus*	35388XXX
220	1	Rain	10.1	0.8	Chrome	35382000
					Matt Black	35382670
					AXOR FinishPlus*	35382XXX

Required parts (choose one):		Finish	Code no.
	AXOR ShowerSolutions Shower arm 390 mm	Chrome	26431000
		Matt Black	26431670
		AXOR FinishPlus*	26431XXX
	AXOR ShowerSolutions Ceiling connector 100 mm	Chrome	26432000
		Matt Black	26432670
		AXOR FinishPlus*	26432XXX
	AXOR ShowerSolutions Ceiling connector 300 mm	Chrome	26433000
		Matt Black	26433670
		AXOR FinishPlus*	26433XXX
	AXOR ShowerSolutions Shower arm 390 mm softsquare	Chrome	26967000
		Matt Black	26967670
		AXOR FinishPlus*	26967XXX
	AXOR ShowerSolutions Ceiling connector 100 mm softsquare	Chrome	26965000
		Matt Black	26965670
		AXOR FinishPlus*	26965XXX
	AXOR ShowerSolutions Ceiling connector 300 mm softsquare	Chrome	26966000
		Matt Black	26966670
		AXOR FinishPlus*	26966XXX

*AXOR FinishPlus: For further AXOR FinishPlus surfaces please see the AXOR FinishPlus overview on page 27.

Overhead showers 1jet

Features of all variants

/ shower head size: 245 mm
/ spray type: Rain
/ ball-joint: overhead shower angle adjustable
/ material spray disc: metal
/ overhead shower removable for cleaning
/ installation: ceiling or wall
/ connection thread G ½
/ suitable for continous flow water heaters

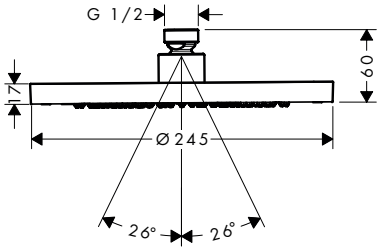

Sustainability

Technologies

Spray types

Overview variants

Shoulder shower size	Number of sprays	Spray types	Max. flow rate at 3 bar (l/min)	Min. flow pressure (bar)	Finish	Code no.
245	1	Rain	9	0.8	Chrome	35381000
					Matt Black	35381670
					AXOR FinishPlus*	35381XXX
245	1	Rain	5.2	0.6	Chrome	35389000
					Matt Black	35389670
					AXOR FinishPlus*	35389XXX
245	1	Rain	10.1	0.8	Chrome	35380000
					Matt Black	35380670
					AXOR FinishPlus*	35380XXX

Required parts (choose one):		Finish	Code no.
	AXOR ShowerSolutions Shower arm 390 mm	Chrome	26431000
		Matt Black	26431670
		AXOR FinishPlus*	26431XXX
	AXOR ShowerSolutions Ceiling connector 100 mm	Chrome	26432000
		Matt Black	26432670
		AXOR FinishPlus*	26432XXX
	AXOR ShowerSolutions Ceiling connector 300 mm	Chrome	26433000
		Matt Black	26433670
		AXOR FinishPlus*	26433XXX
	AXOR ShowerSolutions Shower arm 390 mm softsquare	Chrome	26967000
		Matt Black	26967670
		AXOR FinishPlus*	26967XXX
	AXOR ShowerSolutions Ceiling connector 100 mm softsquare	Chrome	26965000
		Matt Black	26965670
		AXOR FinishPlus*	26965XXX
	AXOR ShowerSolutions Ceiling connector 300 mm softsquare	Chrome	26966000
		Matt Black	26966670
		AXOR FinishPlus*	26966XXX

Measurements within scale drawings are in mm.
Technical specifications and units of measure are subject to change.

Overhead shower 240 1jet

Features

/ shower head size: 240 mm
/ spray type: RainAir
/ ball-joint: overhead shower angle adjustable
/ material spray disc: metal
/ maximum flow rate at 3 bar: 19 l/min
/ flow rate RainAir spray (at 3 bar): 19 l/min
/ minimum flow pressure: 1,5 bar
/ spray disc removable for cleaning
/ installation: ceiling or wall
/ connection thread G ½
/ connection dimension: DN15
/ suitable for continous flow water heaters
/ pressure: low

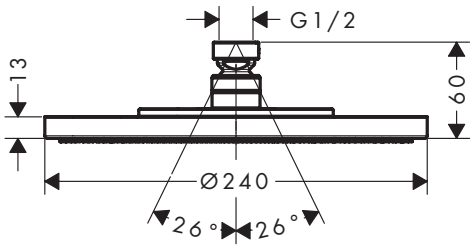

Technologies

Quick Clean | AirPower

Spray types

Rain Air

Certificates/declarations

EPD

Finish	LVI-nro	Code no.
Chrome	6559362	28494000
AXOR FinishPlus*		28494XXX

Required parts (choose one):		Finish	Code no.
	AXOR ShowerSolutions Shower arm 390 mm	Chrome	26431000
		AXOR FinishPlus*	26431XXX
	AXOR ShowerSolutions Ceiling connector 100 mm	Chrome	26432000
		AXOR FinishPlus*	26432XXX
	AXOR ShowerSolutions Ceiling connector 300 mm	Chrome	26433000
		AXOR FinishPlus*	26433XXX

Overhead showers 1jet

Features of all variants

/ spray type: RainAir
/ ball-joint: overhead shower angle adjustable
/ material spray disc: metal
/ minimum flow pressure: 1,5 bar
/ spray disc removable for cleaning
/ installation: ceiling or wall
/ connection thread G ½
/ connection dimension: DN15
/ suitable for continous flow water heaters

240

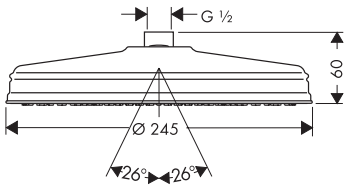

180

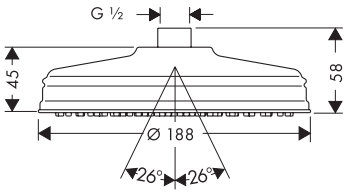

Technologies

Quick Clean | AirPower

Spray types

Rain Air

Certificates/declarations

EPD

Overview variants

Shoulder shower size	Number of sprays	Spray types	Max. flow rate at 3 bar (l/min)	Min. flow pressure (bar)	Finish	Code no.
240	1	RainAir	17	1.5	Chrome	28474000
					Brushed Nickel	28474820
					AXOR FinishPlus*	28474XXX

For more information about this product, please see the next page.

*AXOR FinishPlus: For further AXOR FinishPlus surfaces please see the AXOR FinishPlus overview on page 27.

Overhead showers 1jet

Overview variants

Shoulder shower size	Number of sprays	Spray types	Max. flow rate at 3 bar (l/min)	Min. flow pressure (bar)	Finish	Code no.
180	1	RainAir	18	1.5	Chrome	28487000
					Brushed Nickel	28487820
					AXOR FinishPlus*	28487XXX

Ceiling connectors

Features of all variants

/ installation type: exposed installation / material: brass / connection type: G ½

round

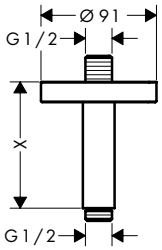

square

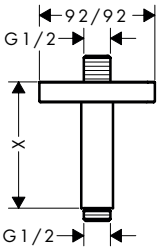

softsquare

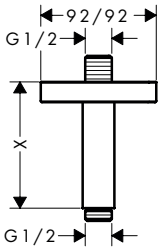

Overview variants

Length (mm)	Shape	Finish	Code no.
300	round	Chrome	26433000
		Matt Black	26433670
		Brushed Nickel	26433820
		AXOR FinishPlus*	26433XXX
100	round	Chrome	26432000
		Matt Black	26432670
		Brushed Nickel	26432820
		AXOR FinishPlus*	26432XXX
300	square	Chrome	26438000
		Matt Black	26438670
		AXOR FinishPlus*	26438XXX
100	square	Chrome	26437000
		Matt Black	26437670
		AXOR FinishPlus*	26437XXX
300	softsquare	Chrome	26966000
		Matt Black	26966670
		AXOR FinishPlus*	26966XXX
100	softsquare	Chrome	26965000
		Matt Black	26965670
		AXOR FinishPlus*	26965XXX

Measurements within scale drawings are in mm.
Technical specifications and units of measure are subject to change.

Ceiling connectors

Features of all variants

/ length: 300 mm
/ material: solid brass
/ connection type: G ½

for overhead shower 280 1jet

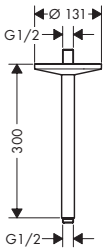

for overhead shower 280 2jet

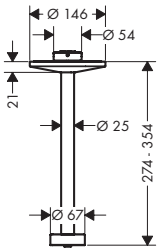

Overview variants

Special	Finish	Code no.
for overhead shower 280 1jet	Chrome	48495000
	Matt Black	48495670
	Matt White	48495700
	AXOR FinishPlus*	48495XXX
for overhead shower 280 2jet	Chrome	48496000
	Matt Black	48496670
	Matt White	48496700
	AXOR FinishPlus*	48496XXX

Shower arms

Features of all variants

/ length: 390 mm
/ installation type: exposed installation
/ material: brass
/ connection type: G ½

round

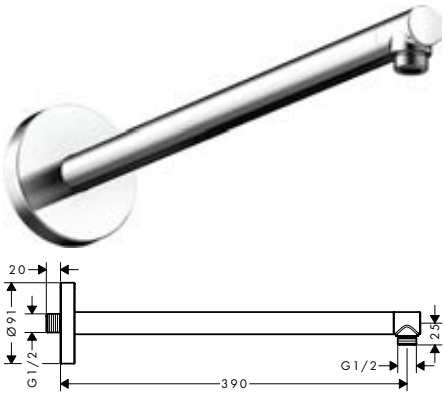

square

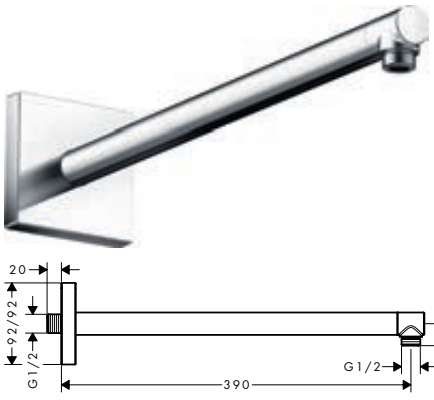

softsquare

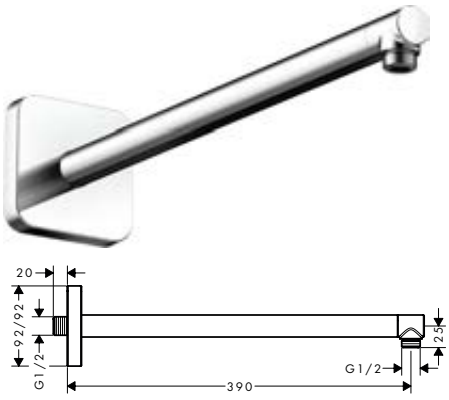

Overview variants

Shape	Finish	Code no.
round	Chrome	26431000
	Matt Black	26431670
	Brushed Nickel	26431820
	AXOR FinishPlus*	26431XXX

For more information about this product, please see the next page.

*AXOR FinishPlus: For further AXOR FinishPlus surfaces please see the AXOR FinishPlus overview on page 27.

Shower arms

Overview variants

Shape	Finish	Code no.
square	Chrome	26436000
	Matt Black	26436670
	AXOR FinishPlus*	26436XXX
softsquare	Chrome	26967000
	Matt Black	26967670
	AXOR FinishPlus*	26967XXX

Escutcheon softsquare

Features

/ material: metal
/ wall-mounted

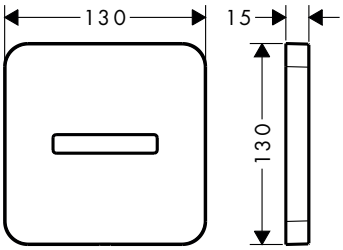

Finish	Code no.
Chrome	35214000
Matt Black	35214670
AXOR FinishPlus*	35214XXX

Shower arm 389 mm

Features

/ length: 389 mm
/ installation type: exposed installation
/ material: brass
/ version: 90° angle
/ connection type: G ½

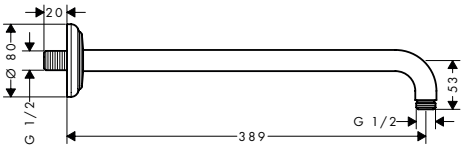

Finish	Code no.
Chrome	27348000
Brushed Nickel	27348820
AXOR FinishPlus*	27348XXX

Measurements within scale drawings are in mm.
Technical specifications and units of measure are subject to change.

Shower modules for concealed installation

Features of all variants

/ shower head size: 120 mm
/ spray type: Rain
/ spray angle adjustable in five steps
/ field of application: functions as overhead, shoulder or side shower
/ maximum flow rate at 3 bar: 5,3 l/min
/ flow rate Rain spray (at 3 bar): 5,3 l/min
/ minimum flow pressure: 1 bar
/ connection thread: G ½
/ in a joined installation (10 mm distance) the use of basic set no.28486180 is recommended
/ in a freely arranged installation, connection via a G ½ connecting thread is possible
/ if installed as an overhead shower with several joint modules, the use of installation aid no.28470180 is recommended
/ suitable for continous flow water heaters
/ connection dimension: DN15
/ material: metal
/ EU taxonomy: max. 6 l/min - Substantial Contribution (SC) possible

square

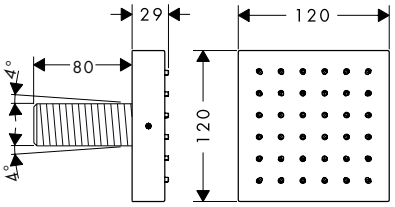

softsquare

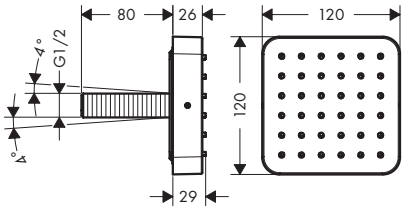

Sustainability

Eco Smart+

Technologies

Quick Clean

Spray types

Rain

Overview variants

Shower head size	Number of sprays	Spray types	Max. flow rate at 3 bar (l/min)	Min. flow pressure (bar)	Shape	Finish	LVI-nro	Code no.
120/120	1	Rain	5.3	1	square	Chrome	6559017	28491000
						AXOR FinishPlus*		28491XXX
120/120	1	Rain	5.3	1	softsquare	Chrome		36822000
						AXOR FinishPlus*		36822XXX

Body showers 1jet

Features of all variants

/ shower head size: 65 mm
/ spray type: Rain
/ spray disc surface: grey
/ side shower angle adjustable
/ maximum flow rate at 3 bar: 5 l/min
/ flow rate Rain spray (at 3 bar): 5 l/min
/ minimum flow pressure: 1,5 bar
/ connection thread: G ½
/ suitable for continous flow water heaters
/ connection dimension: DN15
/ material: metal
/ EU taxonomy: max. 6 l/min - Substantial Contribution (SC) possible

round

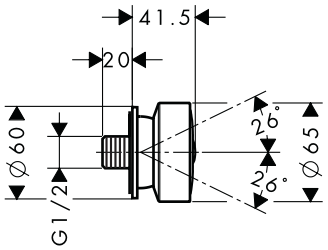

square

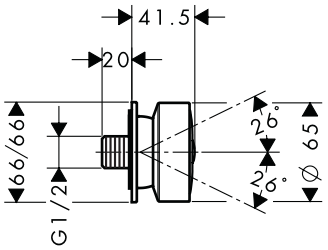

Sustainability

Eco Smart+

Technologies

Quick Clean

Spray types

Rain

Overview variants

Shower head size	Number of sprays	Spray types	Max. flow rate at 3 bar (l/min)	Min. flow pressure (bar)	Shape	Finish	Code no.
65	1	Rain	5	1.5	round	Chrome	28464000
						AXOR FinishPlus*	28464XXX

For more information about this product, please see the next page.

*AXOR FinishPlus: For further AXOR FinishPlus surfaces please see the AXOR FinishPlus overview on page 27.

Body showers 1jet

Overview variants

Shower head size	Number of sprays	Spray types	Max. flow rate at 3 bar (l/min)	Min. flow pressure (bar)	Shape	Finish	Code no.
65	1	Rain	5	1.5	square	Chrome	28469000
						AXOR FinishPlus*	28469XXX

Hand shower 75 1jet EcoSmart

Features

/ shower head size: 73 mm
/ spray type: PowderRain
/ maximum flow rate at 3 bar: 9,1 l/min
/ minimum flow pressure: 0,8 bar
/ material: metal
/ with internal water conduction
/ rinseable screen seal
/ connection thread G ½
/ suitable for continous flow water heaters

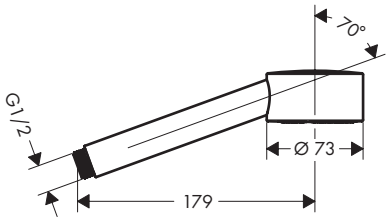

Sustainability

EcoSmart

Technologies

Quick Clean

Spray types

Powder Rain

Finish	LVI-nro	Code no.
Chrome	6550153	48651000
Matt Black	6550154	48651670
Matt White		48651700
AXOR FinishPlus*		48651XXX

Hand shower 2jet

Features

/ shower head size: 124 x 24 mm
/ spray type: Rain, flood spray
/ convenient spray selection via Select button
/ maximum flow rate at 3 bar: 12 l/min
/ minimum flow pressure: 2,4 bar
/ with internal water conduction
/ rinseable screen seal
/ connection thread G ½
/ suitable for continous flow water heaters
/ not recommended for rim-/ tile-mounted mixers

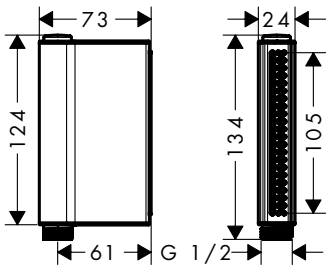

Technologies

Select SELECT Quick Clean

Spray types

Rain

Finish	Code no.
Chrome	45720000
Matt Black	45720670
Matt White	45720700
AXOR FinishPlus*	45720XXX

Measurements within scale drawings are in mm.
Technical specifications and units of measure are subject to change.

Baton hand showers 2jet, 1jet

Features of all variants

/ shower head size: 68 x 24 mm
/ minimum flow pressure: 1 bar
/ rinseable screen seal
/ connection thread G ½
/ suitable for continous flow water heaters

2 spray types

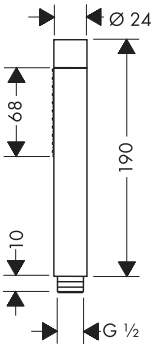

1 spray type

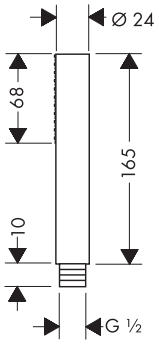

Sustainability

EcoSmart

Technologies

Quick Clean

Spray types

Rain Mono

Certificates/declarations

EPD

Overview variants

Shoulder shower size	Number of sprays	Spray types	Max. flow rate at 3 bar (l/min)	Min. flow pressure (bar)	Finish	LVI-nro	Code no.
68/24	2	Rain, Mono	14.5	1	Chrome	6555615	28532000
					Matt Black		28532670
					Matt White		28532700
					Polished Gold Optic		28532990
					AXOR FinishPlus*		28532XXX
68/24	1	Rain	8	1	Chrome	6559389	10531000
					AXOR FinishPlus*		10531XXX

Hand shower 85 1jet

Features

/ shower head size: 85 mm
/ spray type: Rain
/ maximum flow rate at 3 bar: 9 l/min
/ minimum flow pressure: 1 bar
/ with internal water conduction
/ rinseable screen seal
/ connection thread G ½
/ suitable for continous flow water heaters

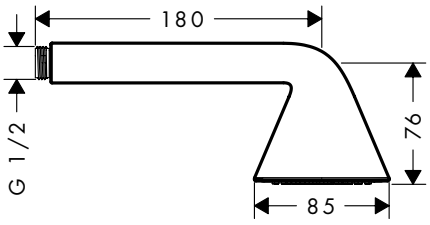

Sustainability

EcoSmart

Technologies

Quick Clean

Spray types

Rain

Finish	Code no.
Chrome	26025000
AXOR FinishPlus*	26025XXX

*AXOR FinishPlus: For further AXOR FinishPlus surfaces please see the AXOR FinishPlus overview on page 27.

Hand showers 3jet

Features of all variants

/ shower head size: 125 mm
/ spray type: Rain, RainAir, WhirlAir
/ convenient spray selection via Select button
/ with internal water conduction
/ rinseable screen seal
/ connection thread G ½
/ suitable for continous flow water heaters

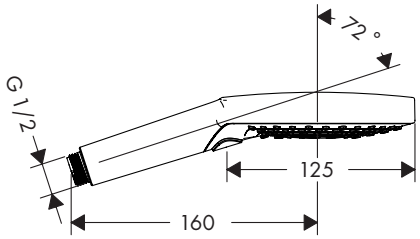

Sustainability

EcoSmart

Technologies

Select · Quick Clean · AirPower

Spray types

Rain Air · Rain · Whirl Air

Overview variants

Shoulder shower size	Number of sprays	Spray types	Max. flow rate at 3 bar (l/min)	Min. flow pressure (bar)	Finish	LVI-nro	Code no.
120	3	Rain, RainAir, WhirlAir	9	1.5	Chrome		26051000
					Matt Black		26051670
					AXOR FinishPlus*		26051XXX
120	3	Rain, RainAir, WhirlAir	15	1.4	Chrome	6559834	26050000
					Matt Black		26050670
					AXOR FinishPlus*		26050XXX

Hand shower 100 1jet

Features

/ shower head size: 100 mm
/ spray type: RainAir
/ spray disc surface: grey
/ maximum flow rate at 3 bar: 16 l/min
/ minimum flow pressure: 1 bar
/ rinseable screen seal
/ connection thread G ½
/ suitable for continous flow water heaters

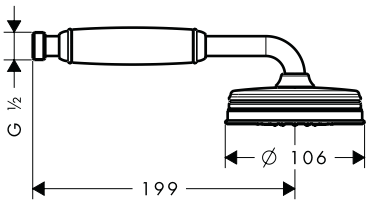

Technologies

Quick Clean · AirPower

Spray types

Rain Air

Finish	LVI-nro	Code no.
Chrome	6555611	16320000
Brushed Nickel	6555612	16320820
AXOR FinishPlus*		16320XXX

Measurements within scale drawings are in mm.
Technical specifications and units of measure are subject to change.

Shower set 75 1jet EcoSmart with wall connection

Features

/ consists of: hand shower, shower bar, shower hose, slider, wall connector
/ shower head size: 73 mm
/ spray type: PowderRain
/ maximum flow rate at 3 bar: 9,1 l/min
/ minimum flow pressure: 0,8 bar
/ operating pressure: min. 1.5 bar/max. 6 bar
/ metal hand shower holder
/ wall mounting: screw fastening
/ wall supports of metal
/ profile pipe: round
/ shower bar diameter: 25 mm
/ drilling distance 929 mm
/ shower hose with conical nut on both ends
/ pivot connector prevents hose from tangling

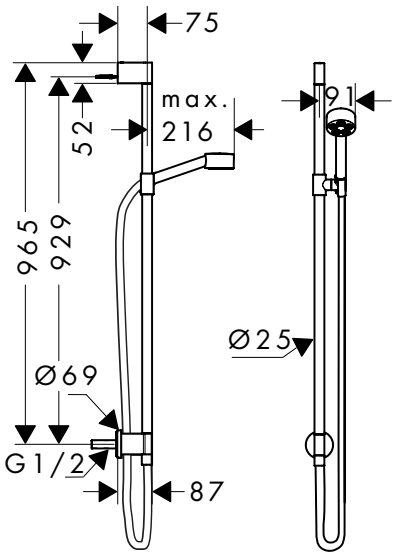

Sustainability

Technologies

Spray types

Finish	Code no.
Chrome	48791000
Matt Black	48791670
Matt White	48791700
AXOR FinishPlus*	48791XXX

Shower bar 0,90 m with wall connection and shower hose 1.60 m

Features

/ consists of: shower bar, slider, wall connector, shower hose
/ pivot connector prevents hose from tangling
/ hose nut: for shower hoses with a conical nut
/ pipe length: 965 mm
/ shower bar diameter: 25 mm
/ profile pipe: round
/ drilling distance: 929 mm
/ metal hand shower holder
/ slider steplessly adjustable
/ wall supports of metal

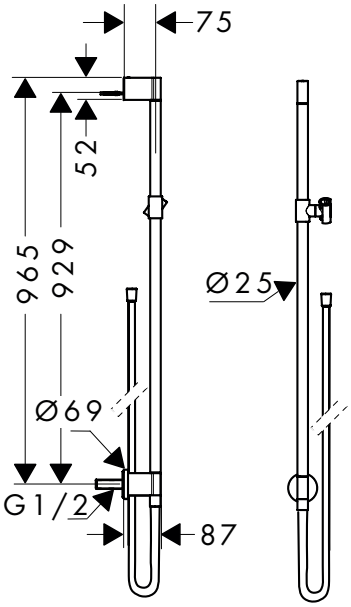

Finish	Code no.
Chrome	48792000
Matt Black	48792670
Matt White	48792700
AXOR FinishPlus*	48792XXX

*AXOR FinishPlus: For further AXOR FinishPlus surfaces please see the AXOR FinishPlus overview on page 27.

Shower set 0.90 m with hand shower 2jet

Features

/ consists of: hand shower, shower bar, shower hose, slider
/ shower head size: 124 x 24 mm
/ spray type: Rain, flood spray
/ convenient spray selection via Select button
/ AXOR Starck wall bar 0.90 m
/ maximum flow rate at 3 bar: 12 l/min
/ minimum flow pressure: 2,5 bar
/ operating pressure: min. 2.5 bar/max. 10 bar
/ wall mounting: screw fastening
/ wall supports made of plastic
/ profile pipe: round
/ shower bar diameter: 25 mm
/ drilling distance 915 mm
/ shower hose with cylindrical nut on both ends
/ pivot joints on shower and fixed side

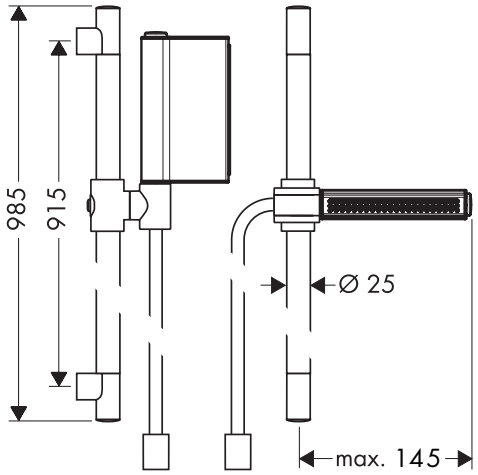

Technologies

Spray types

Finish	Code no.
Chrome	45722000
AXOR FinishPlus*	45722XXX

Shower set 0.90 m with hand shower 85 1jet EcoSmart

Features

/ consists of: hand shower, shower bar, shower hose, slider
/ shower head size: 85 mm
/ spray type: Rain
/ support for shower hose with conical nuts
/ maximum flow rate at 3 bar: 9 l/min
/ minimum flow pressure: 1 bar
/ operating pressure: min. 1 bar/max. 6 bar
/ wall mounting: screw fastening
/ wall supports of metal
/ profile pipe: round
/ shower bar diameter: 22 mm
/ drilling distance 915 mm
/ pivot connector prevents hose from tangling

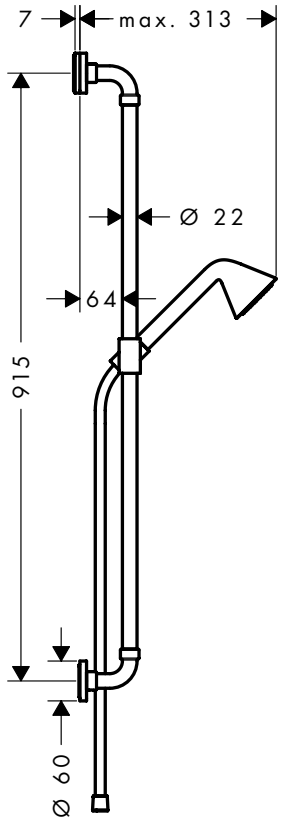

Sustainability

Technologies

Spray types

Finish	Code no.
Chrome	26023000
AXOR FinishPlus*	26023XXX

Measurements within scale drawings are in mm.
Technical specifications and units of measure are subject to change.

Shower sets 2jet, 1jet

Features of all variants

/ consists of: baton hand shower, shower bar, shower hose, slider
/ shower head size: 70 mm
/ minimum flow pressure: 1 bar
/ operating pressure: min. 1 bar/max. 6 bar
/ wall mounting: screw fastening
/ wall supports made of plastic
/ profile pipe: round
/ shower bar diameter: 25 mm
/ drilling distance 915 mm
/ shower hose with cylindrical nut on both ends
/ pivot connector prevents hose from tangling

2 spray types

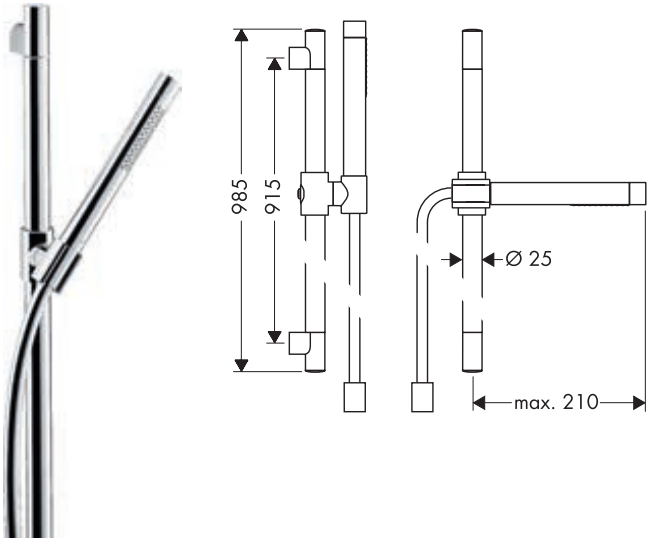

1 spray type

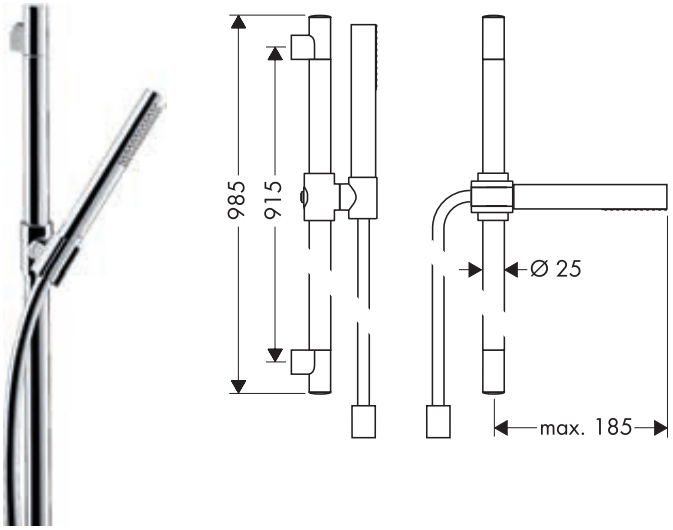

Sustainability

EcoSmart

Technologies

Quick Clean

Spray types

Rain Mono

Overview variants

Shoulder shower size	Number of sprays	Spray types	Max. flow rate at 3 bar (l/min)	Min. flow pressure (bar)	Finish	LVI-nro	Code no.
68/24	2	Rain, Mono	14.5	1	Chrome	6559150	27980000
					AXOR FinishPlus*		27980XXX
68/24	1	Rain	8	1	Chrome	6559404	27983000
					AXOR FinishPlus*		27983XXX

Shower bar 0.90 m with shower hose 1.60 m

Features

/ consists of: shower bar, shower hose, slider
/ pipe length: 985 mm
/ shower bar diameter: 25 mm
/ profile pipe: round
/ drilling distance: 915 mm
/ metal hand shower holder
/ slider steplessly adjustable

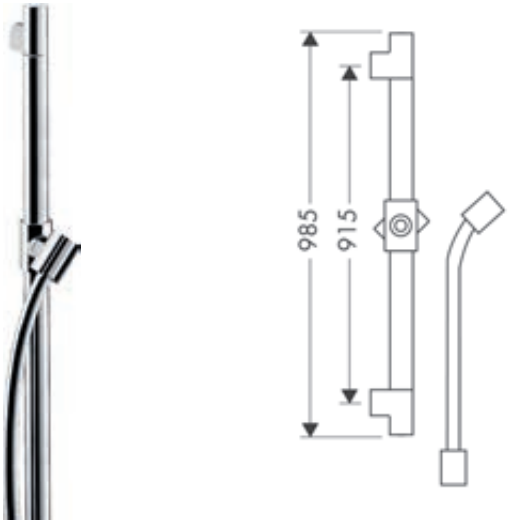

Finish	Code no.
Chrome	27830000
AXOR FinishPlus*	27830XXX

*AXOR FinishPlus: For further AXOR FinishPlus surfaces please see the AXOR FinishPlus overview on page 27.

Shower set 0.90 m with hand shower 120 3jet

Features

/ consists of: hand shower, shower bar, shower hose, slider
/ shower head size: 120 mm
/ spray type: Rain, RainAir, WhirlAir
/ convenient spray selection via Select button
/ inclination angle can be adjusted by 30°
/ wall bar 0.90 m
/ support for shower hose with conical nuts
/ maximum flow rate at 3 bar: 15 l/min
/ minimum flow pressure: 1 bar
/ operating pressure: min. 1 bar/max. 10 bar
/ wall mounting: screw fastening
/ wall supports of metal
/ profile pipe: round
/ drilling distance 915 mm
/ pivot connector prevents hose from tangling

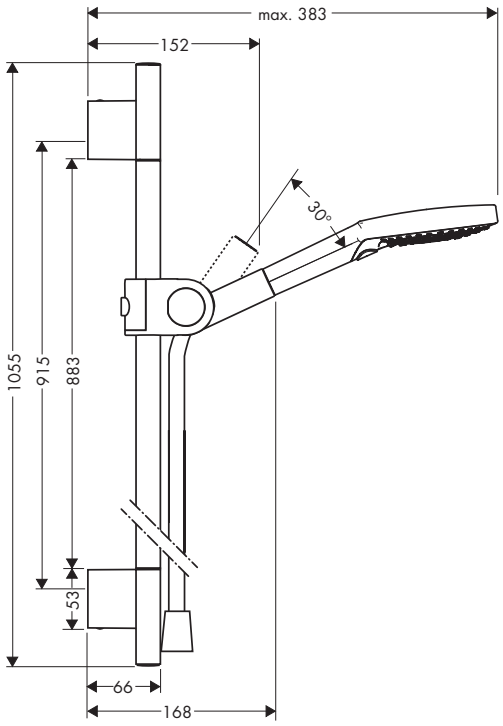

Technologies

Spray types

Finish	Code no.
Chrome	27987000
AXOR FinishPlus*	27987XXX

Shower bar 0.90 m with shower hose 1.60 m

Features

/ consists of: shower bar, shower hose, slider
/ shower bar diameter: 22 mm
/ profile pipe: round
/ drilling distance: 915 mm
/ metal hand shower holder
/ hand shower holder with locking mechanism
/ slider steplessly adjustable

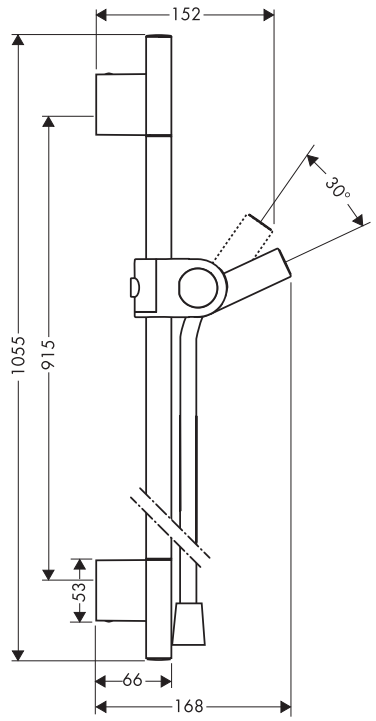

Finish	Code no.
Chrome	27989000
AXOR FinishPlus*	27989XXX

Measurements within scale drawings are in mm.
Technical specifications and units of measure are subject to change.

Shower set 0.90 m with hand shower 120 3jet

Features

/ consists of: hand shower, shower bar, shower hose, slider
/ shower head size: 120 mm
/ spray type: Rain, RainAir, WhirlAir
/ convenient spray selection via Select button
/ maximum flow rate at 3 bar: 15 l/min
/ minimum flow pressure: 1 bar
/ operating pressure: min. 1 bar/max. 6 bar
/ wall mounting: screw fastening
/ wall supports of metal
/ bar width: 30 mm
/ drilling distance 915 mm
/ pivot connector prevents hose from tangling

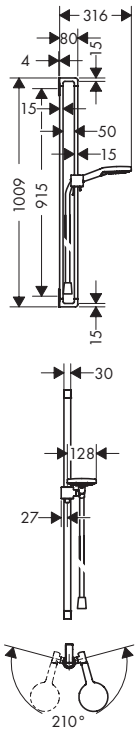

Technologies

Spray types

Finish	Code no.
Chrome	36735000
AXOR FinishPlus*	36735XXX

Shower bar 0.90 m with shower hose 1.60 m

Features

/ consists of: shower bar, shower hose, slider
/ pivot connector prevents hose from tangling
/ support for shower hose with conical nuts
/ hand shower holder moves sideways,up/down and pivots
/ bar width: 30 mm
/ profile pipe: square
/ drilling distance: 915 mm
/ metal hand shower holder
/ slider steplessly adjustable
/ silent inclination angle adjustment
/ wall supports of metal

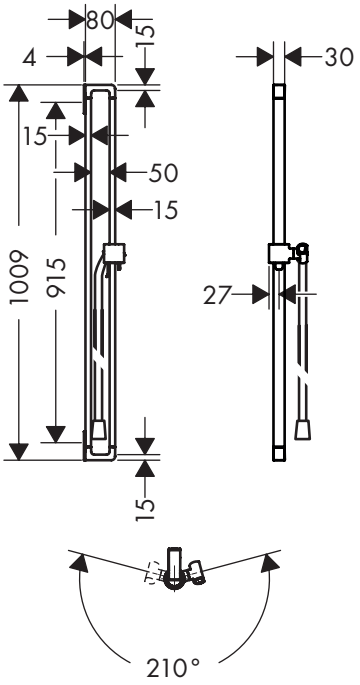

Finish	Code no.
Chrome	36736000
AXOR FinishPlus*	36736XXX

*AXOR FinishPlus: For further AXOR FinishPlus surfaces please see the AXOR FinishPlus overview on page 27.

Shower set 0.90 m with hand shower 120 3jet

Features

/ consists of: hand shower, shower bar, shower hose, slider
/ shower head size: 120 mm
/ spray type: Rain, RainAir, WhirlAir
/ convenient spray selection via Select button
/ inclination angle can be adjusted by 30°
/ support for shower hose with conical nuts
/ maximum flow rate at 3 bar: 16 l/min
/ minimum flow pressure: 1 bar
/ operating pressure: min. 1 bar/max. 6 bar
/ wall mounting: screw fastening
/ wall supports of metal
/ profile pipe: round
/ shower bar diameter: 22 mm
/ drilling distance 915 mm
/ pivot connector prevents hose from tangling

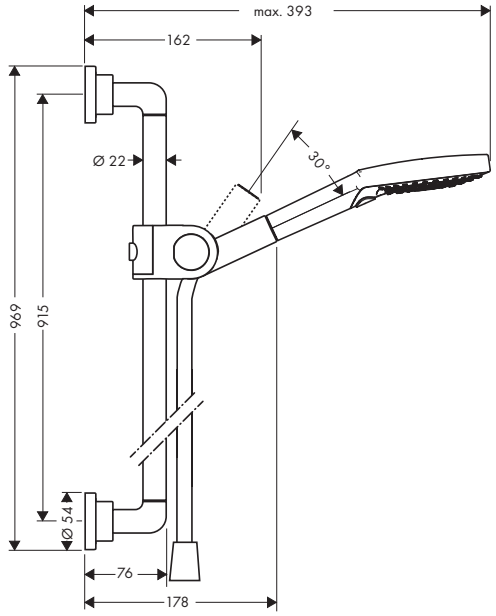

Technologies

Spray types

Finish	Code no.
Chrome	27991000
AXOR FinishPlus*	27991XXX

Shower bar 0.90 m with shower hose 1.60 m

Features

/ consists of: shower bar, shower hose, slider
/ pivot connector prevents hose from tangling
/ pipe length: 969 mm
/ shower bar diameter: 22 mm
/ profile pipe: round
/ drilling distance: 915 mm
/ metal hand shower holder
/ hand shower holder with locking mechanism
/ wall supports of metal

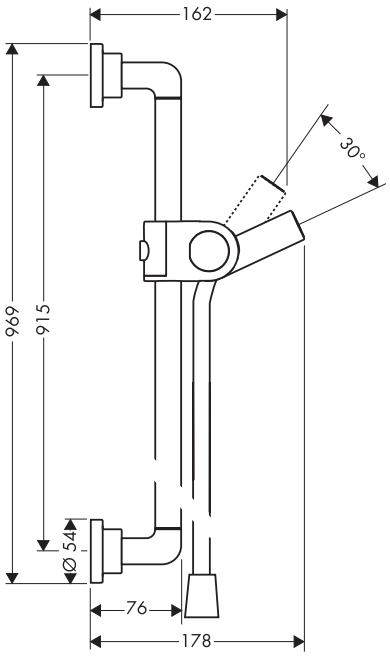

Finish	Code no.
Chrome	27831000
AXOR FinishPlus*	27831XXX

Measurements within scale drawings are in mm.
Technical specifications and units of measure are subject to change.

Shower set 0.90 m with hand shower 100 1jet

Features

/ consists of: hand shower, shower bar, shower hose, slider
/ shower head size: 100 mm
/ spray type: RainAir
/ support for shower hose with conical nuts
/ AXOR Montreux wall bar 0.90 m
/ maximum flow rate at 3 bar: 16 l/min
/ minimum flow pressure: 1 bar
/ operating pressure: min. 1 bar/max. 6 bar
/ wall mounting: screw fastening
/ wall supports of metal
/ profile pipe: round
/ shower bar diameter: 25 mm
/ drilling distance 915 mm

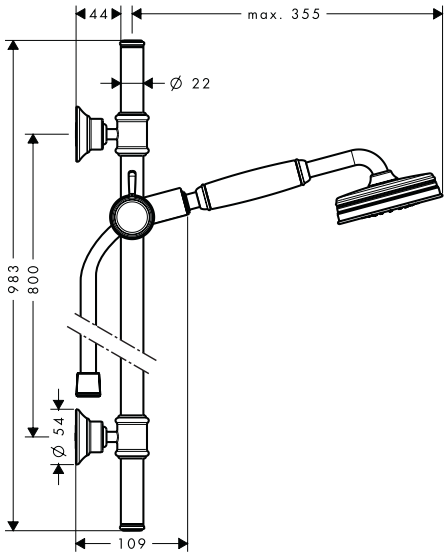

Technologies

Quick Clean | AirPower

Spray types

Rain Air

Finish	LVI-nro	Code no.
Chrome	6559354	27982000
Brushed Nickel	6559355	27982820
AXOR FinishPlus*		27982XXX

Shower holder

Features

/ fixed holding position
/ for hoses with cylindrical nuts
/ material: metal

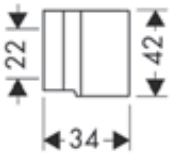

Finish	LVI-nro	Code no.
Chrome	6555704	27515000
AXOR FinishPlus*		27515XXX

Shower holder round

Features

/ fixed holding position
/ for hose with conical nut
/ material: metal

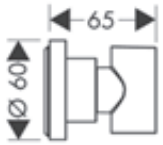

Finish	LVI-nro	Code no.
Chrome	6555616	39525000
AXOR FinishPlus*		39525XXX

*AXOR FinishPlus: For further AXOR FinishPlus surfaces please see the AXOR FinishPlus overview on page 27.

Shower holder

Features

/ fixed holding position
/ for hose with conical nut
/ material: metal

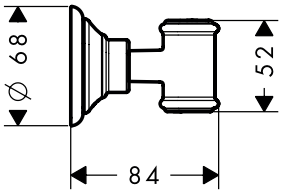

Finish	LVI-nro	Code no.
Chrome	6555613	16325000
Brushed Nickel	6555614	16325820
AXOR FinishPlus*		16325XXX

Shower holder

Features

/ fixed holding position
/ for hoses with cylindrical nuts
/ material: metal

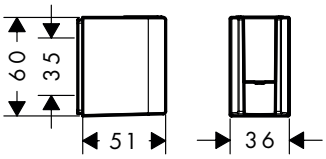

Finish	Code no.
Chrome	45721000
AXOR FinishPlus*	45721XXX

Wall outlets

Features of all variants

/ non-return valve
/ connection type: G ½

round

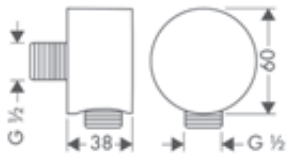

square

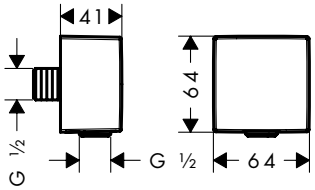

softsquare

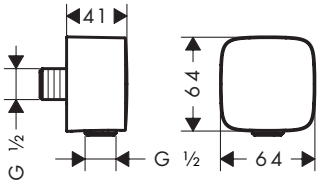

Overview variants

Shape	Finish	LVI-nro	Code no.
round	Chrome	6551002	27451000
	AXOR FinishPlus*		27451XXX
square	Chrome	6559838	36732000
	AXOR FinishPlus*		36732XXX
softsquare	Chrome		36731000
	Matt Black		36731670
	AXOR FinishPlus*		36731XXX

Measurements within scale drawings are in mm.
Technical specifications and units of measure are subject to change.

Wall outlet with non-return valve

Features

/ metal connection angle
/ non-return valve
/ connection type: G ½

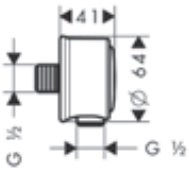

Finish	LVI-nro	Code no.
Chrome	6555309	16884000
Brushed Nickel	6555310	16884820
AXOR FinishPlus*		16884XXX

Porter units

Features of all variants

/ integrated support function
/ metal housing with internal water supply made of plastic
/ non-return valve
/ connection type: G ½
/ for shower hoses with a conical nut

round

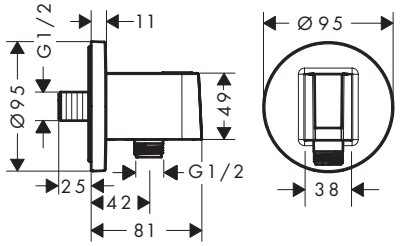

square

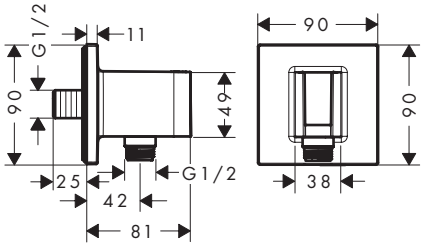

softsquare

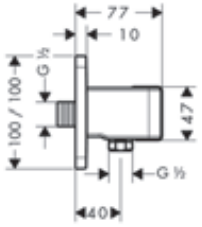

Overview variants

	Shape	Finish	LVI-nro	Code no.
	round	Chrome		36733000
		Matt Black		36733670
		AXOR FinishPlus*		36733XXX
	square	Chrome		36734000
		Matt Black		36734670
		AXOR FinishPlus*		36734XXX
	softsquare	Chrome	6551013	11626000
		Matt Black		11626670
		AXOR FinishPlus*		11626XXX

*AXOR FinishPlus: For further AXOR FinishPlus surfaces please see the AXOR FinishPlus overview on page 27.

Porter unit 120/120 softsquare

Features

/ integrated support function
/ metal connection angle
/ non-return valve
/ connection type: G ½
/ for shower hoses with a conical nut
/ in a joined installation (10 mm distance) we recommend for perfect handling only the horizontal installation
/ in a joined installation (10 mm distance), the basic set no.28486180 must be used
/ in a freely-arranged installation (distance greater than 10 mm), no basic set is required

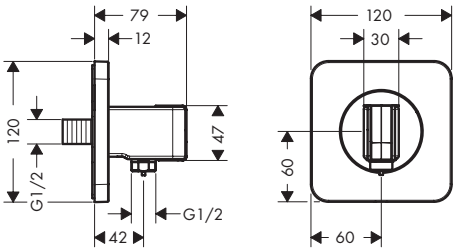

Finish	Code no.
Chrome	36724000
Matt Black	36724670
AXOR FinishPlus*	36724XXX

Porter unit 120/120 with baton hand shower 2jet and shower hose

Features

/ consists of: porter unit, baton hand shower, shower holder, shower hose
/ shower head size: 68 x 24 mm
/ integrated support function
/ spray type: Rain, Mono
/ maximum flow rate at 3 bar: 16,2 l/min
/ minimum flow pressure: 1 bar
/ operating pressure: min. 1 bar/max. 10 bar
/ for shower hoses with conical or cylindrical nut on both sides
/ with non-return valve
/ wall mounting: screw fastening
/ rinseable screen seal
/ in a joined installation (10 mm distance), the basic set no.28486180 must be used
/ in a joined installation (10 mm distance) we recommend for perfect handling only the horizontal installation
/ in a freely-arranged installation (distance greater than 10 mm), no basic set is required

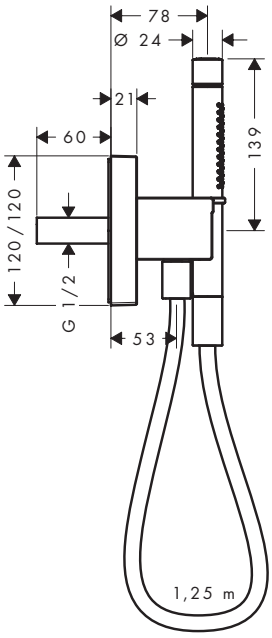

Spray types

Finish	LVI-nro	Code no.
Chrome	6559475	12626000
AXOR FinishPlus*		12626XXX

Measurements within scale drawings are in mm.
Technical specifications and units of measure are subject to change.

Porter unit

Features

/ for hoses with cylindrical nuts
/ integrated support function
/ metal
/ non-return valve
/ connection type: G ½

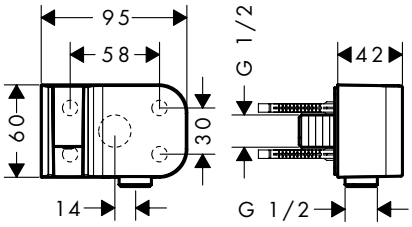

Finish	Code no.
Chrome	45723000
Matt Black	45723670
Matt White	45723700
AXOR FinishPlus*	45723XXX

Textile shower hoses

Features of all variants

/ high-quality textile hose with braiding
/ pivot connector prevents hose from tangling
/ kink-protected
/ water-resistant and water-repellant material
/ yarns are made of recycled PET
/ unique design with multi-colored braided yarns
/ warm, cotton-like material feels great to the skin
/ dishwasher proof up to 60°C
/ connection thread: G ½

conical and cylindrical nut

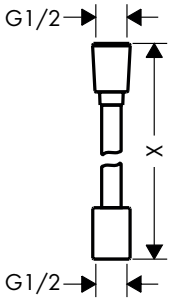

cylindrical nut on both sides

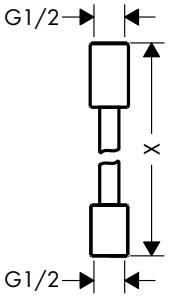

Overview variants

Nuts shower hose	Length (m)	Finish	Code no.
1x conical, 1x cylindrical	2,00	Chrome	28290000
		Brushed Bronze	28290140
		Brushed Gold Optic	28290250
		Polished Red Gold	28290300
		Brushed Red Gold	28290310
		Polished Black Chrome	28290330
		Brushed Black Chrome	28290340
		Matt Black	28290670
		Matt White	28290700
		Stainless Steel Optic	28290800
		Brushed Nickel	28290820
		Brushed Brass	28290950
		Polished Gold Optic	28290990

For more information about this product, please see the next page.

*AXOR FinishPlus: For further AXOR FinishPlus surfaces please see the AXOR FinishPlus overview on page 27.

Textile shower hoses

Overview variants

Nuts shower hose	Length (m)	Finish	Code no.
1x conical, 1x cylindrical	1,60	Chrome	28259000
		Brushed Bronze	28259140
		Brushed Gold Optic	28259250
		Polished Red Gold	28259300
		Brushed Red Gold	28259310
		Polished Black Chrome	28259330
		Brushed Black Chrome	28259340
		Matt Black	28259670
		Matt White	28259700
		Stainless Steel Optic	28259800
		Brushed Nickel	28259820
		Brushed Brass	28259950
		Polished Gold Optic	28259990
1x conical, 1x cylindrical	1,25	Chrome	28227000
		Brushed Bronze	28227140
		Brushed Gold Optic	28227250
		Polished Red Gold	28227300
		Brushed Red Gold	28227310
		Polished Black Chrome	28227330
		Brushed Black Chrome	28227340
		Matt Black	28227670
		Matt White	28227700
		Stainless Steel Optic	28227800
		Brushed Nickel	28227820
		Brushed Brass	28227950
		Polished Gold Optic	28227990
cylindrical on both sides	2,00	Chrome	28291000
		Brushed Bronze	28291140
		Brushed Gold Optic	28291250
		Polished Red Gold	28291300
		Brushed Red Gold	28291310
		Polished Black Chrome	28291330
		Brushed Black Chrome	28291340
		Matt Black	28291670
		Matt White	28291700
		Stainless Steel Optic	28291800
		Brushed Nickel	28291820
		Brushed Brass	28291950
		Polished Gold Optic	28291990

Measurements within scale drawings are in mm.
Technical specifications and units of measure are subject to change.

Textile shower hoses

Overview variants

Nuts shower hose	Length (m)	Finish	Code no.
cylindrical on both sides	1,60	Chrome	28261000
		Brushed Bronze	28261140
		Brushed Gold Optic	28261250
		Polished Red Gold	28261300
		Brushed Red Gold	28261310
		Polished Black Chrome	28261330
		Brushed Black Chrome	28261340
		Matt Black	28261670
		Matt White	28261700
		Stainless Steel Optic	28261800
		Brushed Nickel	28261820
		Brushed Brass	28261950
		Polished Gold Optic	28261990
cylindrical on both sides	1,25	Chrome	28228000
		Brushed Bronze	28228140
		Brushed Gold Optic	28228250
		Polished Red Gold	28228300
		Brushed Red Gold	28228310
		Polished Black Chrome	28228330
		Brushed Black Chrome	28228340
		Matt Black	28228670
		Matt White	28228700
		Stainless Steel Optic	28228800
		Brushed Nickel	28228820
		Brushed Brass	28228950
		Polished Gold Optic	28228990

Metal effect shower hoses

Features of all variants

/ high-quality shower hose with metal effect
/ with plastic coating, easy to clean
/ pivot connector prevents hose from tangling
/ kink-protected
/ connection thread: G ½

conical nut on both sides

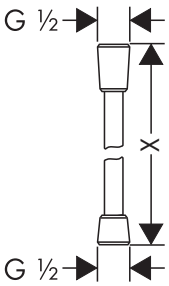

cylindrical nut on both sides

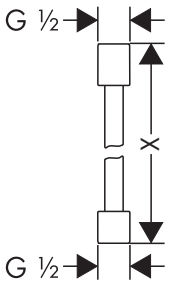

Certificates/declarations

EPD

Overview variants

Nuts shower hose	Length (m)	Finish	LVI-nro	Code no.
conical on both sides	2,00	Chrome		28624000
		Matt Black		28624670
		Brushed Nickel		28624820
		AXOR FinishPlus*		28624XXX

For more information about this product, please see the next page.

*AXOR FinishPlus: For further AXOR FinishPlus surfaces please see the AXOR FinishPlus overview on page 27.

Metal effect shower hoses

Overview variants

Nuts shower hose	Length (m)	Finish	LVI-nro	Code no.
conical on both sides	1,60	Chrome		28626000
		Matt Black		28626670
		Brushed Nickel		28626820
		AXOR FinishPlus*		28626XXX
conical on both sides	1,25	Chrome		28622000
		Matt Black		28622670
		Brushed Nickel		28622820
		AXOR FinishPlus*		28622XXX
cylindrical on both sides	2,00	Chrome	6555307	28284000
		AXOR FinishPlus*		28284XXX
cylindrical on both sides	1,60	Chrome	6555308	28286000
		Matt Black		28286670
		Matt White		28286700
		AXOR FinishPlus*		28286XXX
cylindrical on both sides	1,25	Chrome	6555306	28282000
		Matt Black	6550152	28282670
		Matt White		28282700
		AXOR FinishPlus*		28282XXX

Shower hoses with volume control

Features of all variants

/ high-quality shower hose with metal effect
/ with plastic coating, easy to clean
/ pivot connector prevents hose from tangling
/ kink-protected
/ adjustable flow rate between 6 l/min and 16 l/min
/ nuts shower hose: cylindrical nut on both ends
/ connection thread: G ½

1,60/1,25 m

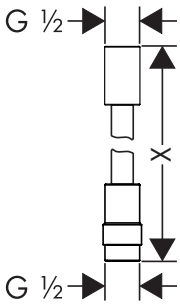

Certificates/declarations

EPD

Overview variants

Length (m)	Finish	LVI-nro	Code no.
1,60	Chrome	6559836	28128000
	Brushed Nickel		28128820
	AXOR FinishPlus*		28128XXX
1,25	Chrome	6559835	28127000
	AXOR FinishPlus*		28127XXX

Measurements within scale drawings are in mm.
Technical specifications and units of measure are subject to change.

Metal shower hoses

Features of all variants

/ metal shower hose
/ without plastic coating
/ pivot joints on both sides
/ kink-protected
/ nuts shower hose: conical nut on both ends
/ connection thread: G ½

2,00/1,60/1,25 m

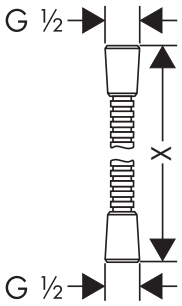

Certificates/declarations

EPD

Overview variants

Length (m)	Finish	LVI-nro	Code no.
2,00	Chrome		28120000
	Brushed Nickel		28120820
	AXOR FinishPlus*		28120XXX
1,60	Chrome	6555313	28116000
	Brushed Nickel	6555314	28116820
	AXOR FinishPlus*		28116XXX
1,25	Chrome	6555311	28112000
	Brushed Nickel	6555312	28112820
	AXOR FinishPlus*		28112XXX

*AXOR FinishPlus: For further AXOR FinishPlus surfaces please see the AXOR FinishPlus overview on page 27.

AXOR Shower controls

Thermostatic module Select 266

AXOR Shower controls

Innovative technology for the shower and bath

Perfectly calibrating hot and cold water, AXOR thermostatic mixers ensure ideal water temperature and volume in the bath and shower. Exposed, they offer elegant design and ease of installation. Concealed, they merge seamlessly with any bathroom décor. Both offer ecologically-conscious water consumption and luxurious customization options. Many AXOR thermostats enable the control of multiple spray outlets, providing an ideally personalized shower experience.

Design: Philippe Starck, PHOENIX, Antonio Citterio, Barber Osgerby

CHARACTERISTIC DESIGN FEATURE:
Available in an array of forms, styles and finishes offering an elegant, space-saving solution.

THE DESIGNERS' IDEA:
Intuitive controls offer ideal efficiency and comfort while enabling outlet selection, water volume control and temperature calibration.

SPECIAL PROGRAM HIGHLIGHTS:

/ AXOR One thermostatic modules: Innovative control and easy to use thanks to Select technology
/ AXOR ShowerCollection: A modular system consisting of thermostatic mixers, valves and shelves
/ AXOR ShowerSelect and thermostatic modules Select: Intuitive to use thanks to Select technology

Learn more about AXOR Showers:
axor-design.com

AXOR Thermostatic modules with Select technology: Intuitive control in the shower

Unmatched aesthetics. Impressive Functionality. AXOR thermostatic modules for concealed installation create unforgettable moments in the shower. For the ultimate ease of use: Select technology reduces operation to the touch of a button. With precise regulation for constant temperature control. With escutcheons made of high-grade metal and available in a variety of designs.

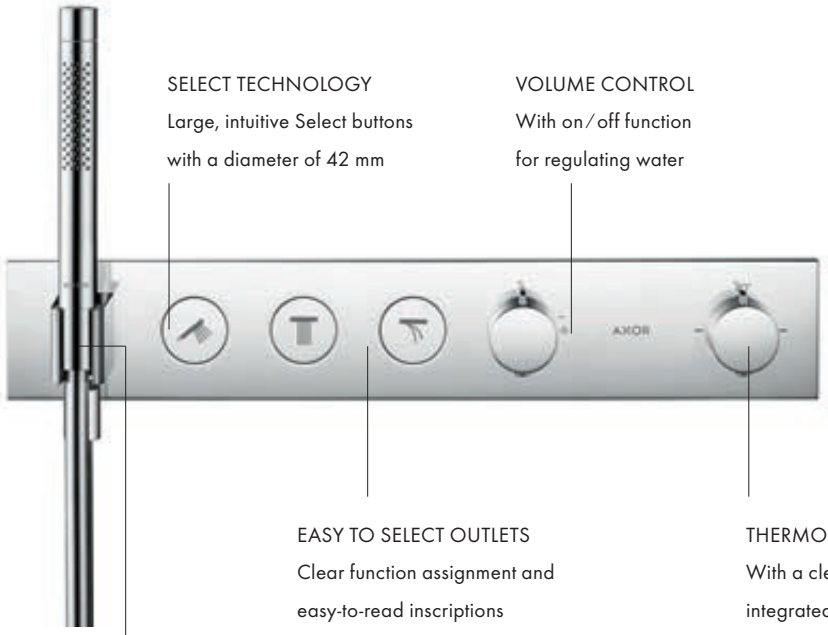

AXOR thermostatic mixers are elegant in design and simple to install Each mixer encases innovative technology within a striking aesthetic. The thermostatic module Select integrates all of the functions – outlet selection, volume control and temperature setting – in one control unit. The clearly designed icons are instantly recognizable and the large buttons are easy to operate, even with soapy fingers or limited mobility.

Thermostatic modules Select for concealed installation

Features of all variants

/ consists of: Thermostatic module, shower holder
/ simultaneous use of several outlets
/ depending on volume flow and installation situation approx. 50% flow rate reduction and integrated shut off function
/ thermostat cartridge, Start/stop valve to operate the functions
/ maximum flow rate at 3 bar: 26 l/min
/ min. operating pressure: 1 bar
/ max. operating pressure: 10 bar
/ Safety stop at 40 °C
/ temperature limitation adjustable
/ for shower hoses with a conical nut
/ connection type: basic set

2 functions

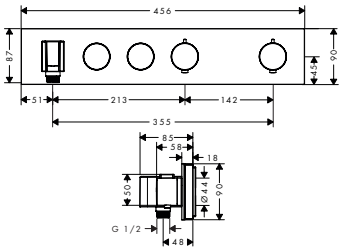

3 functions

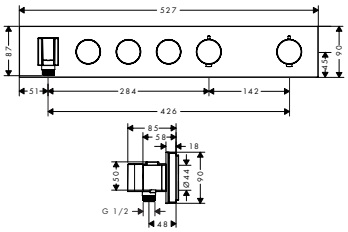

Sustainability

Water Flow Control

Technologies

Safety Stop 40°C | Thermostat °C | Select SELECT

Certificates/declarations

EPD

Overview variants

Number of functions	Max. flow rate at 3 bar (l/min)	Buttons included	Finish	Code no.
2 functions	26	Rain large, hand shower	Chrome	18355000
			AXOR FinishPlus*	18355XXX
3 functions	26	Rain large, Waterfall, hand shower	Chrome	18356000
			AXOR FinishPlus*	18356XXX

Required parts:	For	Code no.
Basic set for thermostatic module Select for 2 functions	18355XXX	18310180
Basic set for thermostatic module Select for 3 functions	18356XXX	18311180

Thermostatic modules Select for concealed installation

Features of all variants

/ consists of: Thermostatic module, shower holder
/ simultaneous use of several outlets
/ depending on volume flow and installation situation approx. 50% flow rate reduction and integrated shut off function
/ thermostat cartridge, Start/stop valve to operate the functions
/ maximum flow rate at 3 bar: 38 l/min
/ flow rate per outlet: 26 l/min
/ flow rate by simultaneous use of all outlets: 38 l/min
/ min. operating pressure: 1 bar
/ max. operating pressure: 10 bar
/ Safety stop at 40 °C
/ temperature limitation adjustable
/ for shower hoses with a conical nut
/ connection type: basic set

4 functions

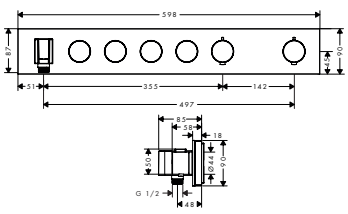

5 functions

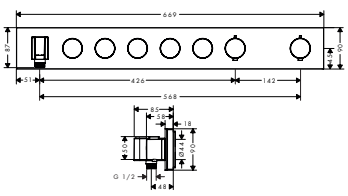

Sustainability

Water Flow Control

Technologies

Safety Stop 40°C | Thermostat °C | Select SELECT

Certificates/declarations

EPD

Measurements within scale drawings are in mm.
Technical specifications and units of measure are subject to change.

Thermostatic modules Select for concealed installation

Overview variants

Number of functions	Max. flow rate at 3 bar (l/min)	Flow rate per user	Buttons included	Finish	Code no.
4 functions	38	26	Rain large, Waterfall, Mono, hand shower	Chrome	18357000
				Polished Red Gold	18357300
				AXOR FinishPlus*	18357XXX
5 functions	38	26	PowderRain inside, PowderRain outside, Mono, overhead shower, hand shower	Chrome	18358000
				AXOR FinishPlus*	18358XXX

Required parts:	For	Code no.
Basic set for thermostatic module Select for 4 functions	18357XXX	18312180
Basic set for thermostatic module Select for 5 functions	18358XXX	18313180

Symbol handshower thermostatic module Select

Finish	Code no.
Chrome	93307000

Symbol overhead shower thermostatic module Select

Finish	Code no.
Chrome	93308000

Symbol overhead shower Rain small thernistatic module Select

Finish	Code no.
Chrome	93663000

Symbol Mono thermostatic module Select

Finish	Code no.
Chrome	93310000

*AXOR FinishPlus: For further AXOR FinishPlus surfaces please see the AXOR FinishPlus overview on page 27.

Symbol PowderRain inside thermostatic module Select

Finish	Code no.
Chrome	93311000

Symbol PowderRain outside thermostatic module Select

Finish	Code no.
Chrome	93312000

Thermostatic module 120/120 for concealed installation square

Features

/ thermostat cartridge
/ maximum flow rate at 3 bar: 59 l/min
/ min. operating pressure: 1,5 bar
/ max. operating pressure: 10 bar
/ Safety stop at 40 °C
/ temperature limitation adjustable
/ non-return valve
/ connection dimension: DN20
/ connection type: basic set

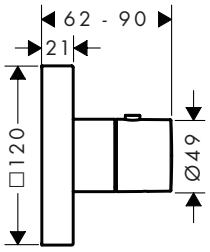

Technologies

Safety Stop 40°C
Thermostat °C

Finish	LVI-nro	Code no.
Chrome	6350097	10755000
AXOR FinishPlus*		10755XXX

Required parts:

	Code no.
Basic set for thermostatic module 120/120 for concealed installation	10754180

Thermostatic module 360/120 for concealed installation square for 3 functions

Features

/ 3 functions
/ simultaneous use of several outlets
/ thermostat cartridge
/ min. operating pressure: 1,5 bar
/ max. operating pressure: 10 bar
/ Safety stop at 40 °C
/ temperature limitation adjustable
/ non-return valve
/ connection dimension: DN20
/ connection type: basic set

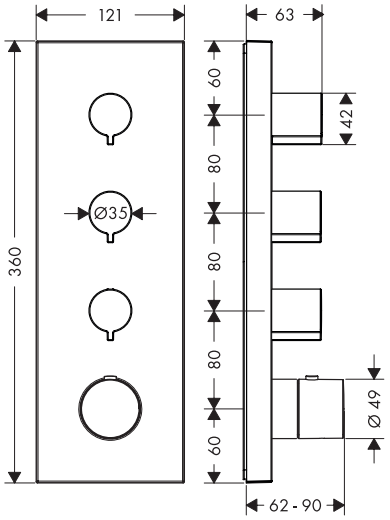

Sustainability

Water Flow Control

Technologies

Safety Stop 40°C
Thermostat °C

Certificates/declarations

EPD

Finish	LVI-nro	Code no.
Chrome	6350095	10751000
AXOR FinishPlus*		10751XXX

Measurements within scale drawings are in mm.
Technical specifications and units of measure are subject to change.

Thermostatic module 360/120 for concealed installation square for 3 functions

Required parts:	Code no.
Basic set for thermostatic module 360/120 for concealed installation	10750180

Shut-off valve 120/120 for concealed installation square

Features

/ connection type: DN15/DN20

/ in a joined installation (10 mm distance) with no.10755000, no.10751000, no.10651000, no.28491000, no.40872000 or no.40873000 the use of basic set no.10971180 is recommended

/ in a freely arranged installation, basic sets no.16973180, no.16974180 or no.16970180 can also be used

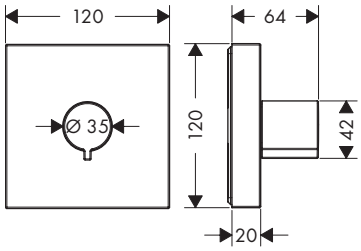

Finish	LVI-nro	Code no.
Chrome	6350100	10972000
AXOR FinishPlus*		10972XXX

Required parts (choose one):	Code no.
Basic set for shut-off valve 120/120 for concealed installation	10971180

Shut-off/ diverter valve Trio/ Quattro 120/120 for concealed installation

Features

/ 3 consumers: in a freely-arranged installation (distance greater than 10 mm), the basic set no.15930180 must be used

/ 2 consumers: in a joined installation (10 mm distance) with no.36702000, the basic set no.36770180 must be used

/ 2 consumers: in a freely-arranged installation (distance greater than 10 mm), the basic set no.15981180 must be used

/ simultaneous utilization of 2 functions

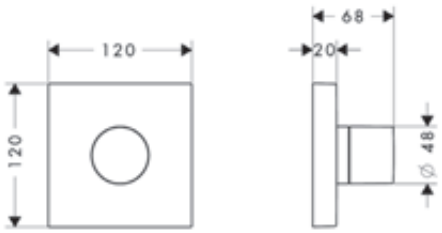

Finish	LVI-nro	Code no.
Chrome	6350098	10932000
AXOR FinishPlus*		10932XXX

Required parts (choose one):	Code no.
Basic set for shut-off/ diverter valve Trio 120/120 for concealed installation	36770180

*AXOR FinishPlus: For further AXOR FinishPlus surfaces please see the AXOR FinishPlus overview on page 27.

Hand shower module 120/120 for concealed installation square

Features

/ consists of: shut-off valve, hand shower module, baton hand shower, shower hose
/ hose nut: for shower hoses with a cylindrical nut
/ connection type: DN15
/ with non-return valve
/ maximum flow rate at 3 bar: 14,5 l/min
/ material: metal
/ flow rate of hand shower at 3 bar: 14,5 l/min

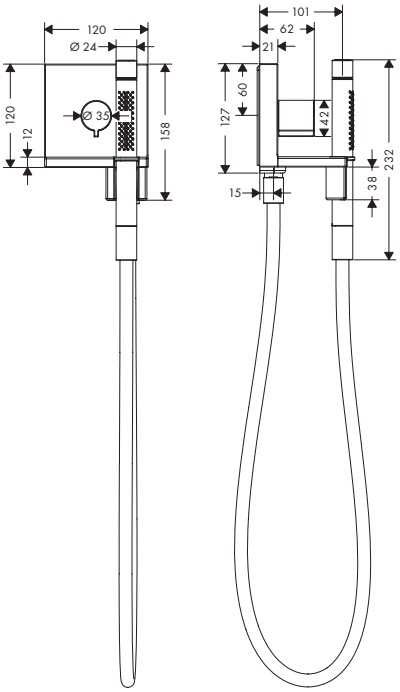

Finish	LVI-nro	Code no.
Chrome	6555628	10651000
AXOR FinishPlus*		10651XXX

Required parts:	Code no.
Basic set for hand shower module 120/120 for concealed installation	10650180

Shelves

Features of all variants

/ for use with either vertical or horizontal installation of the basic set
/ material frame: solid brass
/ material shelf: metal
/ with mounting material
/ concealed fastening
/ drilling distance: 72 mm
/ diameter drill hole: 6 mm

240/120

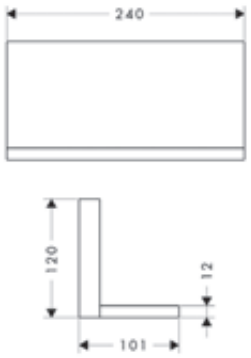

120/120

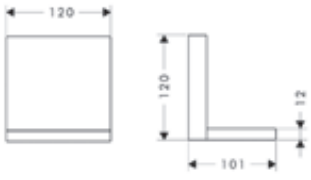

Overview variants

Product dimensions (mm)	Finish	LVI-nro	Code no.
240/120	Chrome	5773834	40873000
	AXOR FinishPlus*		40873XXX
120/120	Chrome	5773833	40872000
	AXOR FinishPlus*		40872XXX

Measurements within scale drawings are in mm.
Technical specifications and units of measure are subject to change.

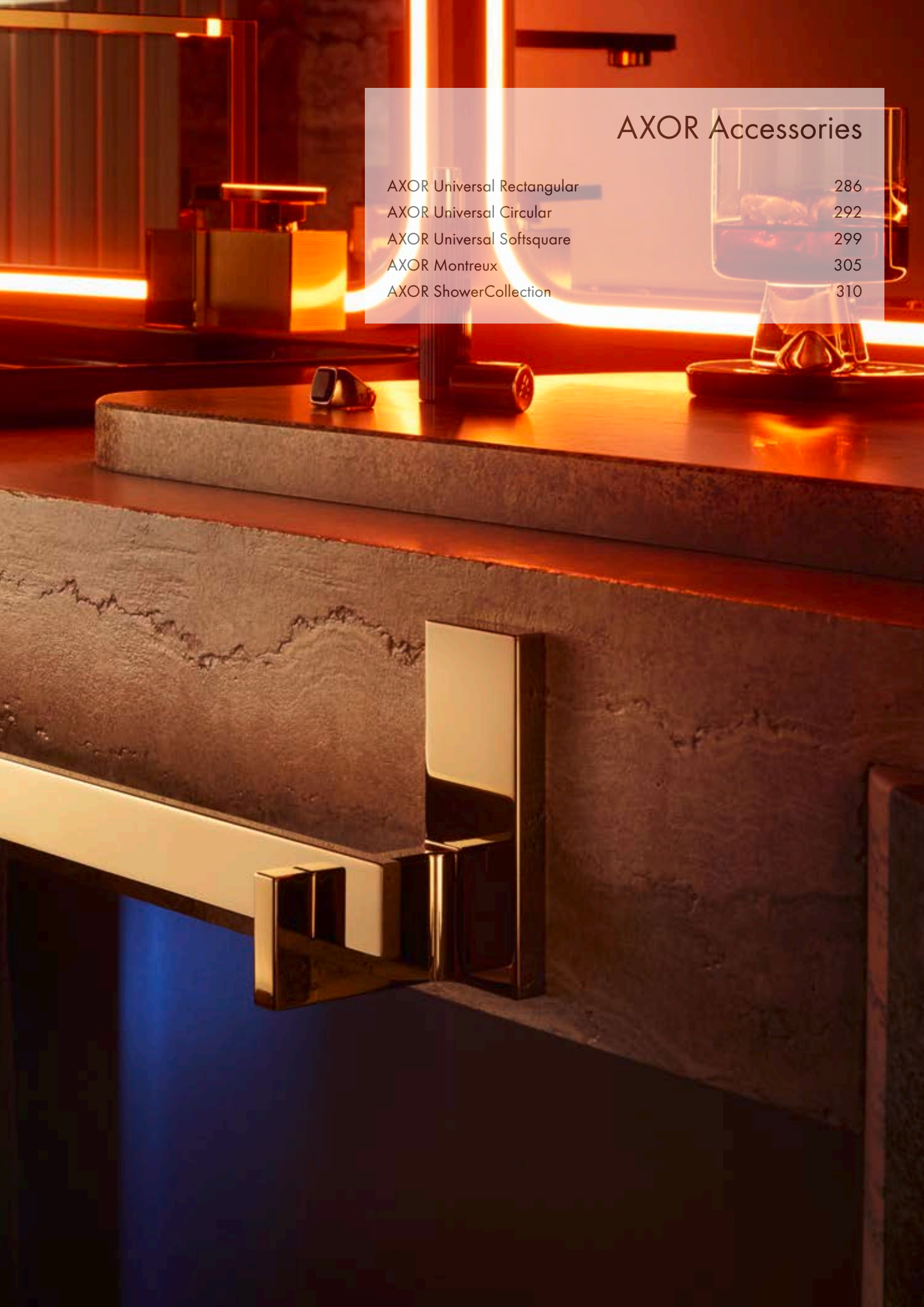

AXOR Accessories

AXOR Universal Rectangular	286
AXOR Universal Circular	292
AXOR Universal Softsquare	299
AXOR Montreux	305
AXOR ShowerCollection	310

AXOR

AXOR Accessories

Highest expression of individual style

Even the smallest details can say something about our personality. For individualists, accessories are no minor matter. They are that certain something. They are a statement with a message. AXOR accessories reflect the aspiration of individual design and holistic excellence that underlies the entire AXOR product range.

Design: Philippe Starck, Antonio Citterio, Barber Osgerby, PHOENIX

EACH INDIVIDUAL AXOR ACCESSORY IS, IN ITSELF, A ONE-OF-A-KIND DESIGN OBJECT.

CHARACTERISTIC DESIGN FEATURE:
From minimalist to sculptural, from organic to classic, from extravagant to universal.

THE DESIGNERS' IDEA:
Perfect accessories: AXOR Accessories are coordinated with the various collections so that they complement and complete the bathroom atmosphere. Or bring the extra flair of a design object to the bathroom or kitchen. In contrast, AXOR Universal Accessories are linear and modular in design, so they fit to many different collections.

SPECIAL PROGRAM HIGHLIGHTS:

- AXOR Universal Rectangular Accessories: ideal complement to AXOR collections with cubic or rectangular design language
- AXOR Universal Circular accessories: Timeless, round design, versatile combinations
- AXOR Universal Softsquare Accessories: Modular, versatile range in linear design
- AXOR Montreux: Authentic-traditional design, for combination with classic faucets and shower products

Learn more about AXOR Accessories:
axor-design.com

AXOR

AXOR Universal Rectangular Accessories

The new AXOR Universal Rectangular Accessories, developed in collaboration with Philippe Starck, are the ideal complement to any AXOR collection with a cubic or rectangular design language. Their clear, no-frills design never takes center stage, but sets understated, high-quality accents in the bathroom. The broad product range includes a shaving mirror, a soap dispenser, toilet paper holders, and a variety of towel bars.

Design: Philippe Starck

SHAVING MIRROR
/ Consistently rectangular design
/ Swiveling

SINGLE HOOK
/ Flat, precise design

BATH TOWEL BAR
/ Wall mounting perfectly reflects the collection's design

AXOR Universal Circular Accessories

With their minimalist, delicate, and timeless design combined with the utmost precision, AXOR Universal Circular accessories offer simplicity in form – for a harmonious overall impression in the bathroom. The products are characterized by a consistent, recognizable design language that runs through all areas of the bathroom – with slim silhouettes, rounded corners, and balanced proportions. Thanks to their timeless design, the products can be combined completely freely with different styles and fit perfectly with the AXOR portfolio collections. AXOR FinishPlus allows for customization with different PVD surfaces, as well as the new lacquered Matt Black surface.

Design: Barber Osgerby

DOUBLE HOOK
/ Minimalistic design
/ Slim silhouettes

WALL MIRROR
/ Diameter: 600 mm
/ New Matt Black painted surface

LOTION DISPENSER
/ Filling capacity: 300 ml
/ Dosage: 2 ml
/ Corrosion-resistant spout tube

AXOR Universal Softsquare Accessories

A new take on the special in everyday life: The AXOR Universal Softsquare accessories – including shelves, bath towel bars, soap dispensers, and even coat hooks – are timelessly elegant extras that can be used individually or flexibly combined with each other. With their straightforward, generic design, they complete the overall aesthetic impression of an individual bathroom or kitchen design. Their elegantly rounded corners and universal design harmonize with several AXOR collections and very different style worlds.

Design: Antonio Citterio

Products required:

a. Rail

b. # 42838000 + 2 x # 42870000 Adapterset

c. # 42834000 + 1 x # 42870000 Adapterset

1

Removable glass cover for easy filling and cleaning Highly hygienic because the scratch-resistant, white glass can be cleaned in the dishwasher

Generously sized shelf surface

Their timeless design allows AXOR Universal Softsquare Accessoires to match every bathroom style seamlessly

Liquid soap dispenser
42819000

Metal frame

180 ml volume for liquid soap or dishwashing liquid

Metal handle can be operated with one hand

AXOR Universal Softsquare Accessoires can be installed as single items or as a system on a rail – with the additionally required adapter set # 42870000

2

Asymmetrical positioning of shelf (300 mm) on the rail. Adapter set required.

Products required:
a. # 42838000 AXOR Universal Softsquare shelf 300 mm
+ 1 x # 42870000 Adapterset
b. Rail

3

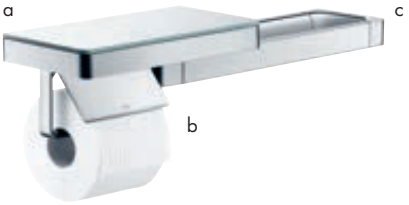

An elegant combination of a rail with shelf (300 mm, installed asymmetrically) and toilet paper holder. Two adapter sets required.

Products required:
a. # 42838000 AXOR Universal Softsquare shelf 300 mm
+ 1 x # 42870000 Adapterset
b. # 42836000 AXOR Universal Softsquare toilet paper holder
+ 1 x # 42870000 Adapterset
c. Rail

4

Large shelf surface: shelf (300 mm) and liquid soap dispenser on a rail. Three adapter sets required.

Products required:
a. # 42838000 AXOR Universal Softsquare shelf 300 mm
+ 2 x # 42870000 Adapterset
b. # 42819000 AXOR Universal Softsquare lotion dispenser
+ 1 x # 42870000 Adapterset
c. Rail

5

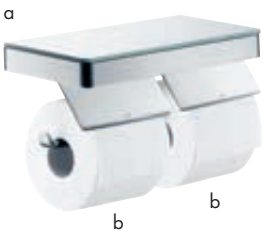

Triple duty: Shelf (300 mm) with two toilet paper holders. Two adapter sets required. One toilet paper holder is mounted in mirrored position.

Products required:
a. # 42838000 AXOR Universal Softsquare shelf 300 mm
+ 2 x # 42870000 Adapterset
b. 2 x # 42836000

6

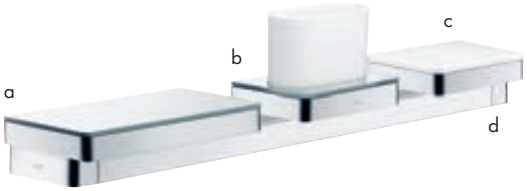

Everything is right where you need it: Multi-functional combination of a rail with shelf (300 mm), toothbrush holder and soap dish / shelf (150 mm). Four adapter sets required.

Products required:
a. # 42838000 AXOR Universal Softsquare shelf 300 mm
+ 2 x # 42870000 Adapterset
b. # 42836000 AXOR Universal Softsquare toilet paper holder
+ 1 x # 42870000 Adapterset
c. # 42803000 + 1 x # 42870000 Adapterset
d. Rail

7

Toilet paper holder with soap dish / shelf (150 mm) – a space-saving combination for the guest bathroom. One adapter set required.

Products required:
a. # 42803000 AXOR Universal Softsquare soap dish
+ 1 x # 42870000 Adapterset
b. # 42836000 AXOR Universal Softsquare toilet paper holder

AXOR Accessories are available with surfaces in Chrome -000 as well as in AXOR FinishPlus -xxx surfaces.

An array of accessories inspired by the early industrial age

AXOR Montreux brings Belle Époque elegance and charm to the bathroom. Complete the classic look with a wide range of accessories, from soap basket to towel rail, shaving mirror to toothbrush tumbler. Like the mixers and showers of the collection, each accessory is an authentic luxury design object, inspired by the bathroom fittings of the early industrial age and manufactured to the highest standards of quality.

AXOR Universal Rectangular Toothbrush tumbler

Features

/ wall-mounted
/ material: metal, glass
/ holder material: metal
/ with mounting material
/ concealed fastening
/ drilling distance: 35 mm
/ diameter drill hole: 6 mm

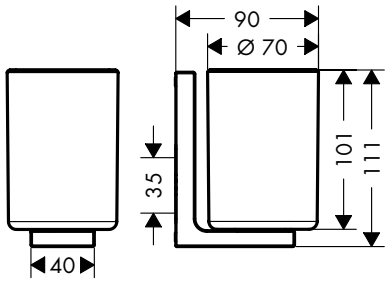

Finish	Code no.
Chrome	42604000
Brushed Bronze	42604140
Brushed Black Chrome	42604340
Matt Black	42604670
Brushed Nickel	42604820
Polished Gold Optic	42604990
AXOR FinishPlus*	42604XXX

AXOR Universal Rectangular Soap dish

Features

/ wall-mounted
/ material shelf: glass
/ holder material: metal
/ with mounting material
/ concealed fastening
/ drilling distance: 35 mm
/ diameter drill hole: 6 mm

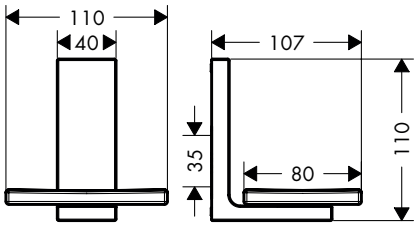

Finish	Code no.
Chrome	42605000
Brushed Bronze	42605140
Brushed Black Chrome	42605340
Matt Black	42605670
Brushed Nickel	42605820
Polished Gold Optic	42605990
AXOR FinishPlus*	42605XXX

AXOR Universal Rectangular Liquid soap dispenser

Features

/ wall-mounted
/ holder material: metal
/ material container: plastic
/ type of soap: liquid soap
/ filling capacity 600 ml
/ dosage 0.5 ml
/ with mounting material
/ drilling distance: 35 mm
/ diameter drill hole: 6 mm
/ suitable for shower

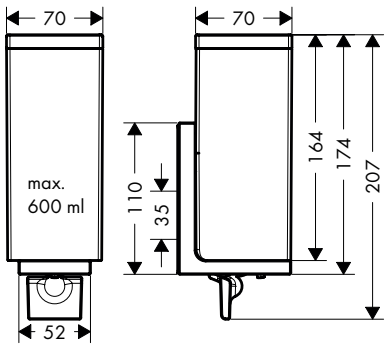

Finish	Code no.
Chrome	42610000
Brushed Bronze	42610140
Brushed Black Chrome	42610340
Matt Black	42610670
Brushed Nickel	42610820
Polished Gold Optic	42610990
AXOR FinishPlus*	42610XXX

Measurements within scale drawings are in mm.
Technical specifications and units of measure are subject to change.

AXOR Universal Rectangular Grab bar

Features

/ wall-mounted
/ material: metal
/ length: 340 mm
/ with mounting material
/ concealed fastening
/ drilling distance: 300 mm
/ diameter drill hole: 6 mm
/ suitable for shower

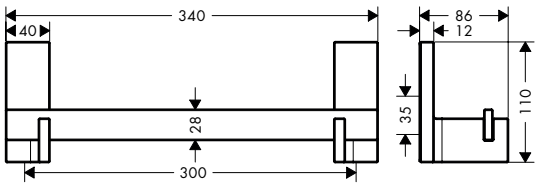

Finish	Code no.
Chrome	42613000
Brushed Bronze	42613140
Brushed Black Chrome	42613340
Matt Black	42613670
Brushed Nickel	42613820
Polished Gold Optic	42613990
AXOR FinishPlus*	42613XXX

AXOR Universal Rectangular Shower door handle

Features

/ material: metal
/ holder material: metal
/ with mounting material
/ thickness of glass: 6 - 12 mm
/ diameter drill hole: 6 mm
/ concealed fastening

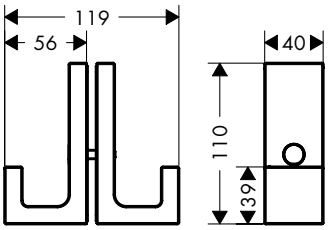

Finish	Code no.
Chrome	42639000
Brushed Bronze	42639140
Brushed Black Chrome	42639340
Matt Black	42639670
Brushed Nickel	42639820
Polished Gold Optic	42639990
AXOR FinishPlus*	42639XXX

AXOR Universal Rectangular Bath towel rails

Features of all variants

/ wall-mounted
/ material: metal
/ with mounting material
/ diameter drill hole: 6 mm

600/800

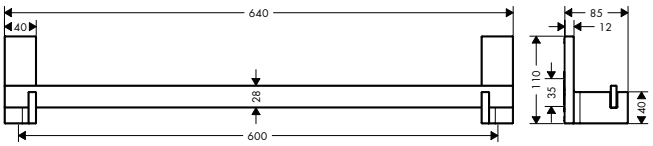

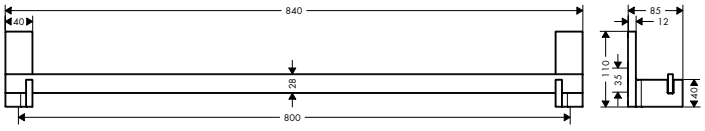

For more information about this product, please see the next page.

*AXOR FinishPlus: For further AXOR FinishPlus surfaces please see the AXOR FinishPlus overview on page 27.

AXOR Universal Rectangular Bath towel rails

Overview variants

Product dimensions (mm)	Finish	Code no.
600	Chrome	42661000
	Brushed Bronze	42661140
	Brushed Black Chrome	42661340
	Matt Black	42661670
	Brushed Nickel	42661820
	Polished Gold Optic	42661990
	AXOR FinishPlus*	42661XXX
800	Chrome	42683000
	Brushed Bronze	42683140
	Brushed Black Chrome	42683340
	Matt Black	42683670
	Brushed Nickel	42683820
	Polished Gold Optic	42683990
	AXOR FinishPlus*	42683XXX

AXOR Universal Rectangular Towel holders

Features of all variants

/ wall-mounted
/ material: metal
/ fixed
/ length: 380 mm
/ with mounting material
/ drilling distance: 35 mm
/ diameter drill hole: 6 mm
/ concealed fastening

single

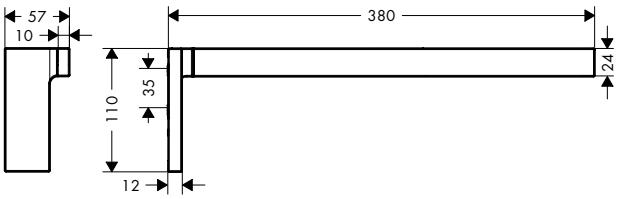

double

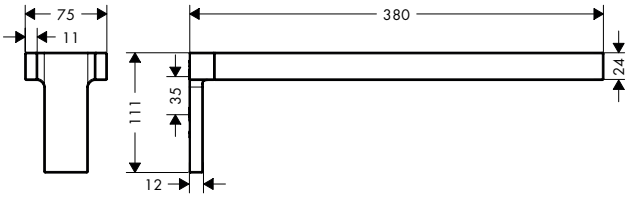

Overview variants

Number of holder	Finish	Code no.
1 holder	Chrome	42626000
	Brushed Bronze	42626140
	Brushed Black Chrome	42626340
	Matt Black	42626670
	Brushed Nickel	42626820
	Polished Gold Optic	42626990
	AXOR FinishPlus*	42626XXX
2 holders	Chrome	42622000
	Brushed Bronze	42622140
	Brushed Black Chrome	42622340
	Matt Black	42622670
	Brushed Nickel	42622820
	Polished Gold Optic	42622990
	AXOR FinishPlus*	42622XXX

Measurements within scale drawings are in mm.
Technical specifications and units of measure are subject to change.

AXOR Universal Rectangular Towel ring

Features

/ wall-mounted
/ material: metal
/ swivelling
/ with mounting material
/ concealed fastening
/ drilling distance: 35 mm
/ diameter drill hole: 6 mm

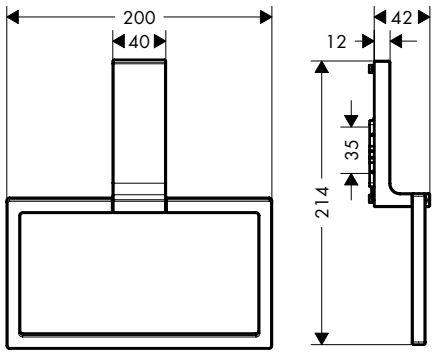

Finish	Code no.
Chrome	42623000
Brushed Bronze	42623140
Brushed Black Chrome	42623340
Matt Black	42623670
Brushed Nickel	42623820
Polished Gold Optic	42623990
AXOR FinishPlus*	42623XXX

AXOR Universal Rectangular Towel hook

Features

/ wall-mounted
/ material: metal
/ with mounting material
/ concealed fastening
/ drilling distance: 35 mm
/ diameter drill hole: 6 mm

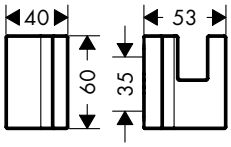

Finish	Code no.
Chrome	42611000
Brushed Bronze	42611140
Brushed Black Chrome	42611340
Matt Black	42611670
Brushed Nickel	42611820
Polished Gold Optic	42611990
AXOR FinishPlus*	42611XXX

AXOR Universal Rectangular Shelf 300

Features

/ wall-mounted
/ material shelf: metal
/ length: 300 mm
/ with mounting material
/ concealed fastening
/ drilling distance: 200 mm
/ diameter drill hole: 6 mm
/ suitable for shower

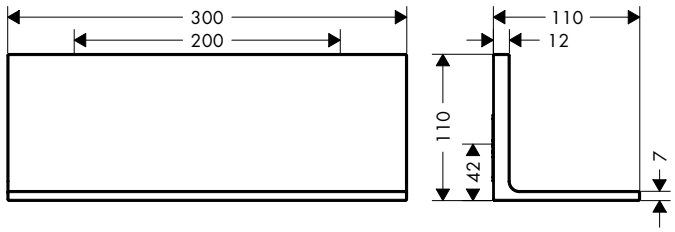

Finish	Code no.
Chrome	42644000
Brushed Bronze	42644140
Brushed Black Chrome	42644340
Matt Black	42644670
Brushed Nickel	42644820
Polished Gold Optic	42644990
AXOR FinishPlus*	42644XXX

*AXOR FinishPlus: For further AXOR FinishPlus surfaces please see the AXOR FinishPlus overview on page 27.

AXOR Universal Rectangular Toilet paper holders

Features of all variants

/ wall-mounted
/ material: metal
/ with mounting material
/ concealed fastening
/ drilling distance: 35 mm
/ diameter drill hole: 6 mm

single

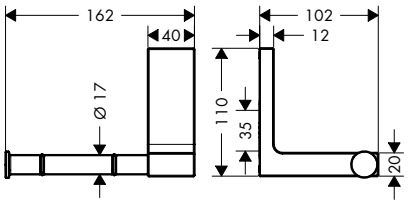

double

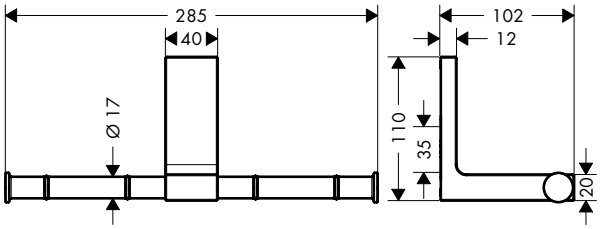

Overview variants

	Version	Finish	Code no.
	single	Chrome	42656000
		Brushed Bronze	42656140
		Brushed Black Chrome	42656340
		Matt Black	42656670
		Brushed Nickel	42656820
		Polished Gold Optic	42656990
		AXOR FinishPlus*	42656XXX
	double	Chrome	42657000
		Brushed Bronze	42657140
		Brushed Black Chrome	42657340
		Matt Black	42657670
		Brushed Nickel	42657820
		Polished Gold Optic	42657990
		AXOR FinishPlus*	42657XXX

AXOR Universal Rectangular Spare roll holder

Features

/ wall-mounted
/ material: metal
/ with mounting material
/ concealed fastening
/ drilling distance: 35 mm
/ diameter drill hole: 6 mm

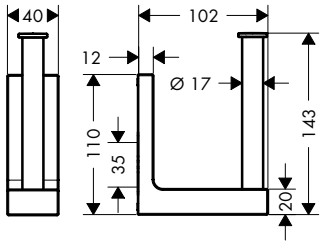

Finish	Code no.
Chrome	42654000
Brushed Bronze	42654140
Brushed Black Chrome	42654340
Matt Black	42654670
Brushed Nickel	42654820
Polished Gold Optic	42654990
AXOR FinishPlus*	42654XXX

Measurements within scale drawings are in mm.
Technical specifications and units of measure are subject to change.

AXOR Universal Rectangular Toilet brush holder wall-mounted

Features

/ wall-mounted
/ material: metal
/ with cover lid
/ with removable insert
/ with mounting material
/ concealed fastening
/ drilling distance 35 mm
/ diameter drill hole: 6 mm

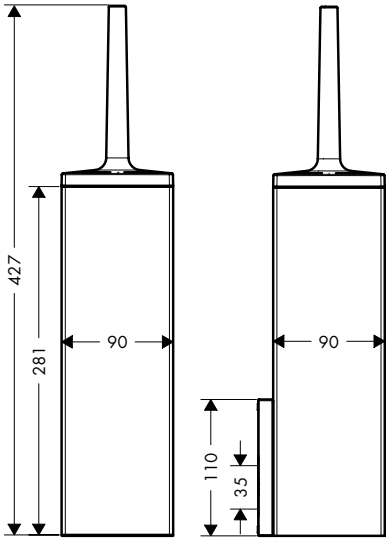

Finish	Code no.
Chrome	42655000
Brushed Bronze	42655140
Brushed Black Chrome	42655340
Matt Black	42655670
Brushed Nickel	42655820
Polished Gold Optic	42655990
AXOR FinishPlus*	42655XXX

AXOR Universal Rectangular Shaving mirror

Features

/ material: mirror glass
/ material frame: metal
/ mirror is inclinable
/ enlargement: 1 x magnification, 1,7 x magnification
/ with mounting material
/ concealed fastening
/ drilling distance: 35 mm
/ diameter drill hole: 6 mm
/ wall-mounted

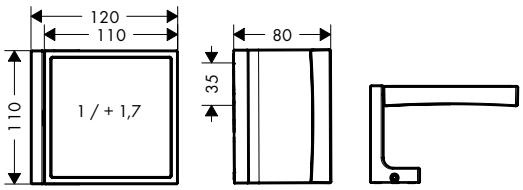

Finish	Code no.
Chrome	42649000
Brushed Bronze	42649140
Brushed Black Chrome	42649340
Matt Black	42649670
Brushed Nickel	42649820
Polished Gold Optic	42649990
AXOR FinishPlus*	42649XXX

*AXOR FinishPlus: For further AXOR FinishPlus surfaces please see the AXOR FinishPlus overview on page 27.

AXOR Universal Circular Toothbrush tumbler

Features

/ wall-mounted
/ material: metal, glass
/ holder material: metal
/ with mounting material
/ concealed fastening
/ drilling distance: 35 mm
/ diameter drill hole: 6 mm

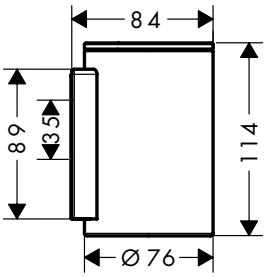

Finish	Code no.
Chrome	42804000
Matt Black	42804670
Matt White	42804700
AXOR FinishPlus*	42804XXX

AXOR Universal Circular Soap dish

Features

/ wall-mounted
/ with mounting material
/ concealed fastening
/ drilling distance: 35 mm
/ diameter drill hole: 6 mm

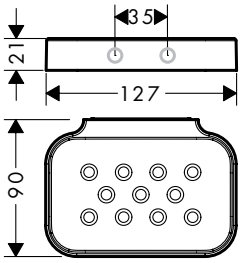

Finish	Code no.
Chrome	42805000
Matt Black	42805670
Matt White	42805700
AXOR FinishPlus*	42805XXX

AXOR Universal Circular Liquid soap dispenser

Features

/ wall-mounted
/ holder material: metal
/ material container: metal
/ type of soap: liquid soap
/ filling capacity 300 ml
/ dosage 2 ml
/ with mounting material
/ drilling distance: 35 mm
/ diameter drill hole: 6 mm

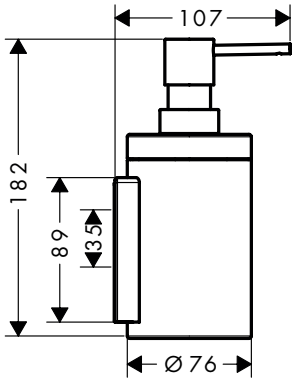

Finish	Code no.
Chrome	42810000
Matt Black	42810670
Matt White	42810700
AXOR FinishPlus*	42810XXX

Measurements within scale drawings are in mm.
Technical specifications and units of measure are subject to change.

AXOR Universal Circular Grab bar

Features

/ wall-mounted
/ material: metal
/ holder material: metal
/ length: 355 mm
/ with mounting material
/ concealed fastening
/ drilling distance: 300 mm
/ diameter drill hole: 6 mm
/ TÜV certified

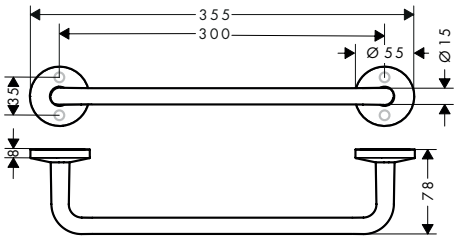

Finish	Code no.
Chrome	42813000
Matt Black	42813670
Matt White	42813700
AXOR FinishPlus*	42813XXX

AXOR Universal Circular Bath towel rails

Features of all variants

/ wall-mounted
/ material: metal
/ holder material: metal
/ fixed
/ with mounting material
/ diameter drill hole: 6 mm
/ concealed fastening

600/800

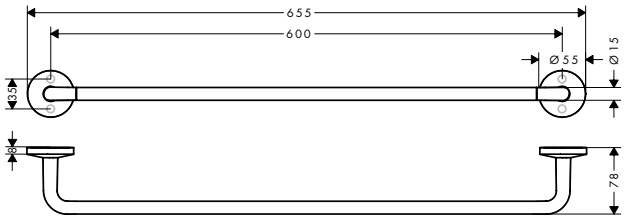

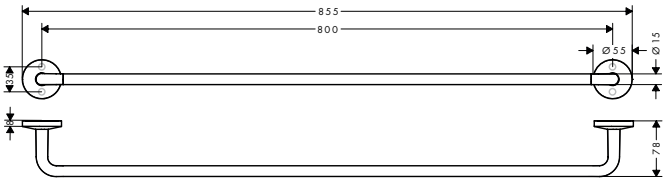

Overview variants

Product dimensions (mm)	Finish	Code no.
600	Chrome	42860000
	Matt Black	42860670
	Matt White	42860700
	AXOR FinishPlus*	42860XXX
800	Chrome	42880000
	Matt Black	42880670
	Matt White	42880700
	AXOR FinishPlus*	42880XXX

*AXOR FinishPlus: For further AXOR FinishPlus surfaces please see the AXOR FinishPlus overview on page 27.

AXOR Universal Circular Towel holders

Features of all variants

/ wall-mounted
/ material: metal
/ holder material: metal
/ with mounting material
/ drilling distance: 35 mm
/ diameter drill hole: 6 mm
/ concealed fastening

single

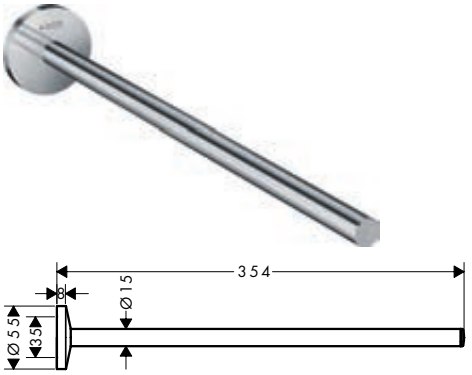

double

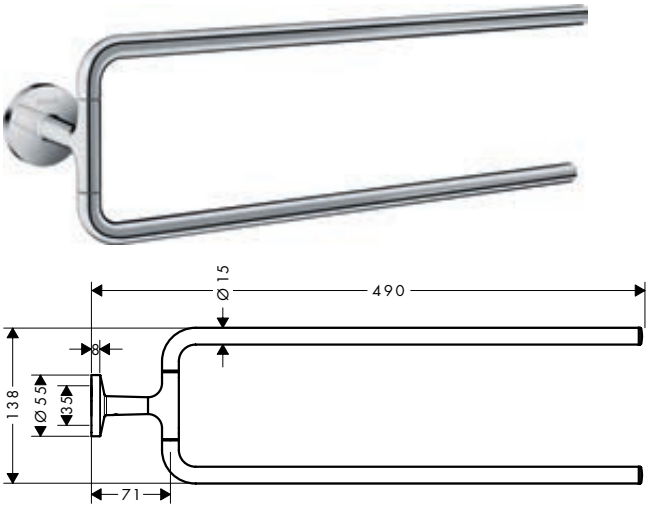

Overview variants

Number of holder	Swivelling	Finish	Code no.
1 holder	–	Chrome	42826000
		Matt Black	42826670
		Matt White	42826700
		AXOR FinishPlus*	42826XXX
2 holders	■	Chrome	42822000
		Matt Black	42822670
		Matt White	42822700
		AXOR FinishPlus*	42822XXX

AXOR Universal Circular Towel ring

Features

/ wall-mounted
/ material: metal
/ holder material: metal
/ swivelling
/ with mounting material
/ concealed fastening
/ drilling distance: 35 mm
/ diameter drill hole: 6 mm

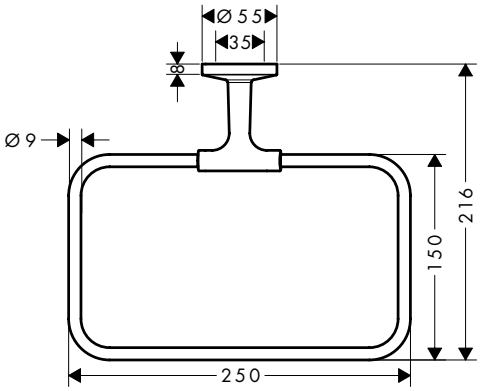

Finish	Code no.
Chrome	42823000
Matt Black	42823670
Matt White	42823700
AXOR FinishPlus*	42823XXX

Measurements within scale drawings are in mm.
Technical specifications and units of measure are subject to change.

AXOR Universal Circular Towel hooks

Features of all variants

/ wall-mounted
/ material: metal
/ with mounting material
/ concealed fastening
/ diameter drill hole: 6 mm

single

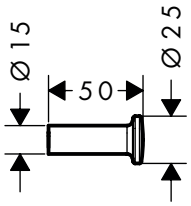

double

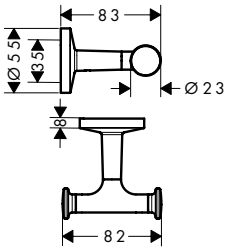

Overview variants

	Number of hooks	Finish	Code no.
	1 hook	Chrome	42811000
		Matt Black	42811670
		Matt White	42811700
		AXOR FinishPlus*	42811XXX
	2 hooks	Chrome	42812000
		Matt Black	42812670
		Matt White	42812700
		AXOR FinishPlus*	42812XXX

AXOR Universal Circular Towel rack with towel holder

Features

/ wall-mounted
/ material: metal
/ length: 655 mm
/ with mounting material
/ concealed fastening
/ drilling distance: 600 mm
/ diameter drill hole: 6 mm

Finish	Code no.
Chrome	42843000
Matt Black	42843670
Matt White	42843700
AXOR FinishPlus*	42843XXX

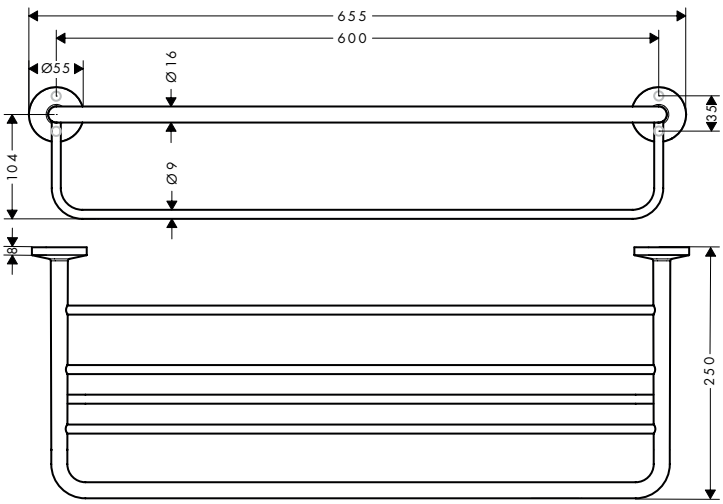

*AXOR FinishPlus: For further AXOR FinishPlus surfaces please see the AXOR FinishPlus overview on page 27.

AXOR Universal Circular Shelf 400

Features

/ wall-mounted
/ material frame: solid brass
/ material shelf: metal
/ length: 400 mm
/ with mounting material
/ concealed fastening
/ drilling distance: 340 mm
/ diameter drill hole: 6 mm
/ suitable for shower

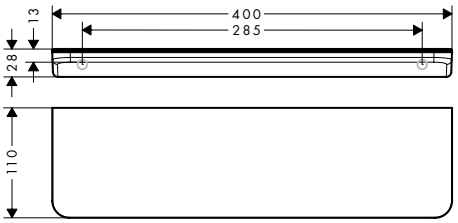

Finish	Code no.
Chrome	42844000
Matt White	42844700
Matt Black	42844670
AXOR FinishPlus*	42844XXX

AXOR Universal Circular Toilet paper holders

Features of all variants

/ wall-mounted
/ material: metal
/ with mounting material
/ concealed fastening
/ drilling distance: 35 mm
/ diameter drill hole: 6 mm

single

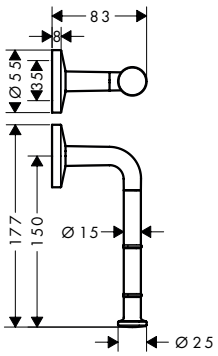

double

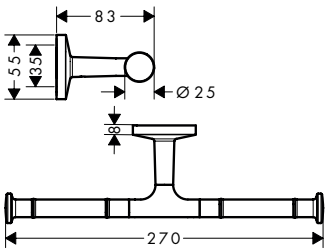

with cover

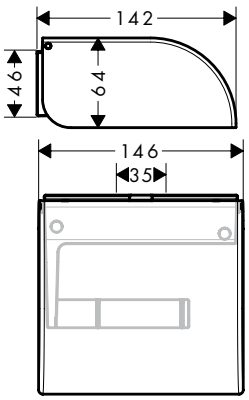

Overview variants

Version	Finish	Code no.
single	Chrome	42856000
	Matt Black	42856670
	Matt White	42856700
	AXOR FinishPlus*	42856XXX
double	Chrome	42857000
	Matt Black	42857670
	Matt White	42857700
	AXOR FinishPlus*	42857XXX
with cover	Chrome	42858000
	Matt Black	42858670
	Matt White	42858700
	AXOR FinishPlus*	42858XXX

Measurements within scale drawings are in mm.
Technical specifications and units of measure are subject to change.

AXOR Universal Circular Toilet brush holder wall-mounted

Features

/ wall-mounted
/ material: metal
/ material recess: matt plastic
/ with cover lid
/ with removable insert
/ with mounting material
/ concealed fastening
/ drilling distance 35 mm
/ diameter drill hole: 6 mm

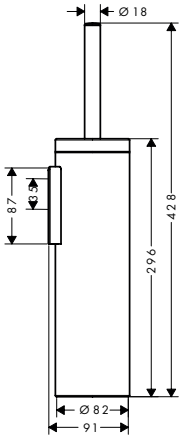

Finish	Code no.
Chrome	42855000
Matt Black	42855670
Matt White	42855700
AXOR FinishPlus*	42855XXX

AXOR Universal Circular Tissue box

Features

/ wall-mounted
/ screw fastening
/ material: metal, plastic
/ with mounting material
/ concealed fastening
/ drilling distance 200 mm
/ diameter drill hole: 6 mm

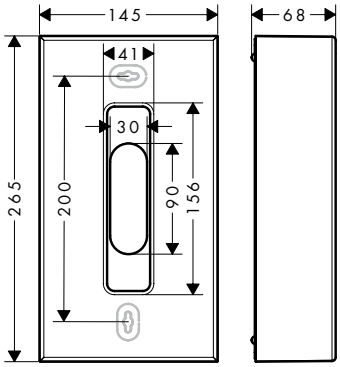

Finish	Code no.
Chrome	42873000
Matt Black	42873670
Matt White	42873700
AXOR FinishPlus*	42873XXX

AXOR Universal Circular Waste bin

Features

/ free-standing
/ material: metal
/ material recess: plastic
/ capacity: 5 l
/ with removable insert

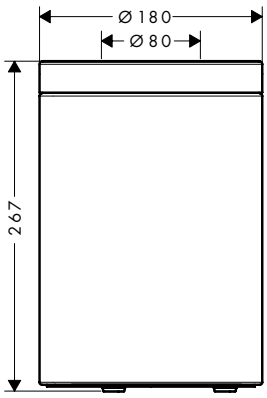

Finish	Code no.
Chrome	42872000
Matt Black	42872670
Matt White	42872700
AXOR FinishPlus*	42872XXX

*AXOR FinishPlus: For further AXOR FinishPlus surfaces please see the AXOR FinishPlus overview on page 27.

AXOR Universal Circular Shaving mirror

Features

/ material: mirror glass
/ material frame: metal
/ mirror is inclinable
/ swivelling
/ enlargement: 1,7 x magnification
/ with mounting material
/ concealed fastening
/ drilling distance: 51 mm
/ diameter drill hole: 6 mm
/ wall-mounted

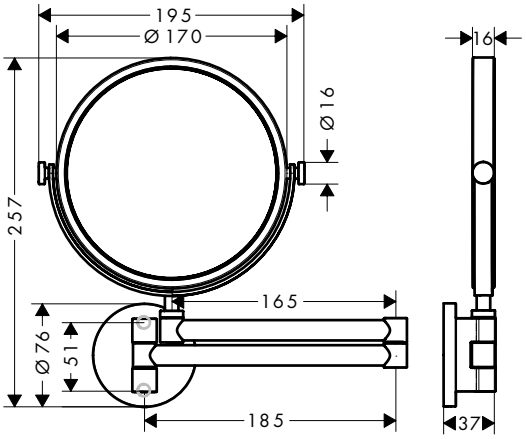

Finish	Code no.
Chrome	42849000
Matt Black	42849670
Matt White	42849700
AXOR FinishPlus*	42849XXX

AXOR Universal Circular Wall mirror

Features

/ material: mirror glass
/ material frame: metal
/ with mounting material
/ concealed fastening
/ drilling distance: 260 mm
/ diameter drill hole: 6 mm
/ wall-mounted

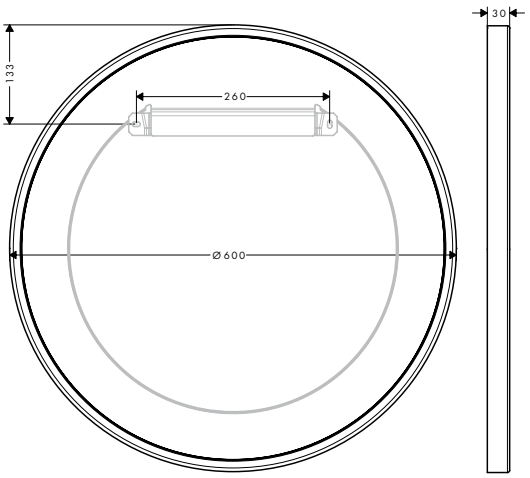

Finish	Code no.
Chrome	42848000
Matt Black	42848670
Matt White	42848700

Measurements within scale drawings are in mm.
Technical specifications and units of measure are subject to change.

AXOR Universal Softsquare Toothbrush tumbler

Features

/ wall-mounted
/ adapter set no.42870XXX must be used when installing on a rail
/ material: metal, glass
/ holder material: metal
/ with mounting material
/ concealed fastening
/ drilling distance: 108 mm
/ diameter drill hole: 6 mm

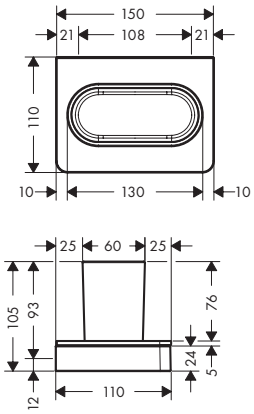

Finish	Code no.
Chrome	42834000
Matt Black	42834670
AXOR FinishPlus*	42834XXX

AXOR Universal Softsquare Soap dish/ shelf

Features

/ wall-mounted
/ adapter set no.42870XXX must be used when installing on a rail
/ combinable with roll holder no.42836XXX (adapter no.42870XXX necessary)
/ material recess: ceramic
/ with mounting material
/ concealed fastening
/ drilling distance: 108 mm
/ diameter drill hole: 6 mm

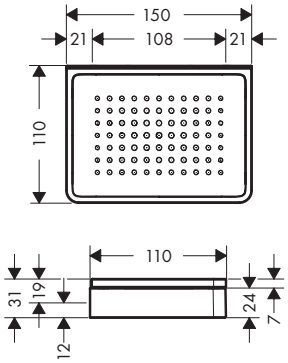

Finish	Code no.
Chrome	42803000
Matt Black	42803670
AXOR FinishPlus*	42803XXX

AXOR Universal Softsquare Liquid soap dispenser with shelf

Features

/ wall-mounted
/ adapter set no.42870XXX must be used when installing on a rail
/ holder material: metal
/ material container: glass
/ type of soap: liquid soap
/ filling capacity 180 ml
/ dosage 0.5 ml
/ with mounting material
/ drilling distance: 108 mm
/ diameter drill hole: 6 mm
/ can be used additional as a shelf
/ suitable for shower

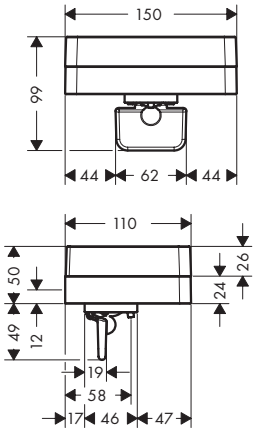

Finish	Code no.
Chrome	42819000
Matt Black	42819670
AXOR FinishPlus*	42819XXX

*AXOR FinishPlus: For further AXOR FinishPlus surfaces please see the AXOR FinishPlus overview on page 27.

AXOR Universal Softsquare Shelves

Features of all variants

/ wall-mounted
/ combinable with roll holder no.42836XXX (adapter no.42870XXX necessary)
/ material frame: solid brass
/ material shelf: safety glass
/ with mounting material
/ concealed fastening
/ diameter drill hole: 6 mm
/ suitable for shower

150

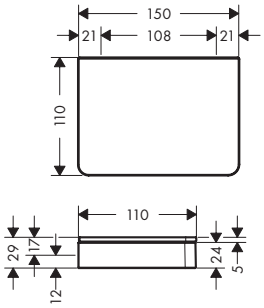

300

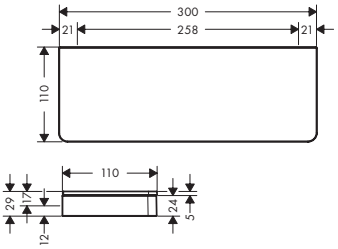

Overview variants

	Product dimensions (mm)	Finish	Code no.
	150	Chrome	42840000
		Matt Black	42840670
		AXOR FinishPlus*	42840XXX
	300	Chrome	42838000
		AXOR FinishPlus*	42838XXX

AXOR Universal Softsquare Shelf 150/70 for shower

Features

/ wall-mounted
/ adapter set no.42870XXX must be used when installing on a rail
/ holder material: metal
/ material shelf: glass
/ with drain holes
/ with mounting material
/ concealed fastening
/ drilling distance: 108 mm
/ diameter drill hole: 6 mm
/ suitable for shower

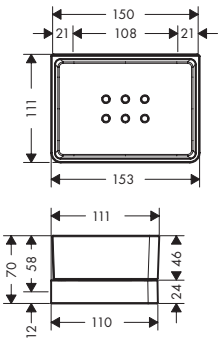

Finish	Code no.
Chrome	42802000
AXOR FinishPlus*	42802XXX

AXOR Universal Softsquare Rail grab bar 300 mm

Features

/ wall-mounted
/ across or upright mountable
/ material: metal
/ holder material: metal
/ length: 374 mm
/ with mounting material
/ concealed fastening
/ drilling distance: 280 mm
/ diameter drill hole: 6 mm
/ use as a rail for accessoiries and grab bar
/ TÜV certified

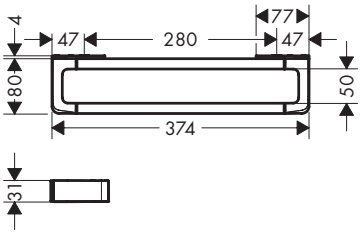

Finish	Code no.
Chrome	42830000
Matt Black	42830670
AXOR FinishPlus*	42830XXX

Measurements within scale drawings are in mm.
Technical specifications and units of measure are subject to change.

AXOR Universal Softsquare Bath towel rails

Features of all variants

/ wall-mounted
/ material: metal
/ holder material: metal
/ fixed
/ with mounting material
/ diameter drill hole: 6 mm
/ use as a rail for accessories and bath towel holder
/ concealed fastening

600/800

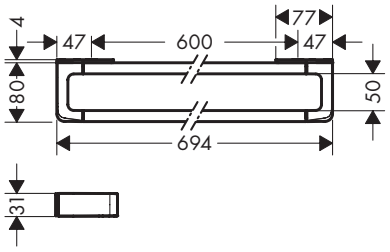

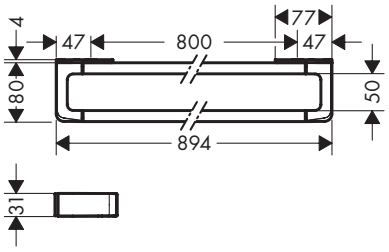

Overview variants

Product dimensions (mm)	Finish	Code no.
600	Chrome	42832000
	Satin Black	42832350
	Matt Black	42832670
	AXOR FinishPlus*	42832XXX
800	Chrome	42833000
	Matt Black	42833670
	AXOR FinishPlus*	42833XXX

AXOR Universal Softsquare Shower door handle 444 mm

Features

/ material: metal
/ holder material: metal
/ fixed
/ length: 444 mm
/ with mounting material
/ thickness of glass: 6 - 12 mm
/ drilling distance: 350 mm
/ can be used simultaneously as a bath towel holder
/ concealed fastening

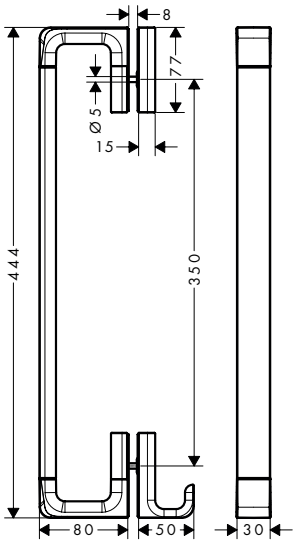

Finish	Code no.
Chrome	42837000
Matt Black	42837670
AXOR FinishPlus*	42837XXX

*AXOR FinishPlus: For further AXOR FinishPlus surfaces please see the AXOR FinishPlus overview on page 27.

AXOR Universal Softsquare Bath towel shelf

Features

/ wall-mounted
/ material: glass, metal
/ length: 600 mm
/ thickness of glass: 6 mm
/ with mounting material
/ drilling distance: 400 mm
/ diameter drill hole: 6 mm
/ for hanging bathrobes

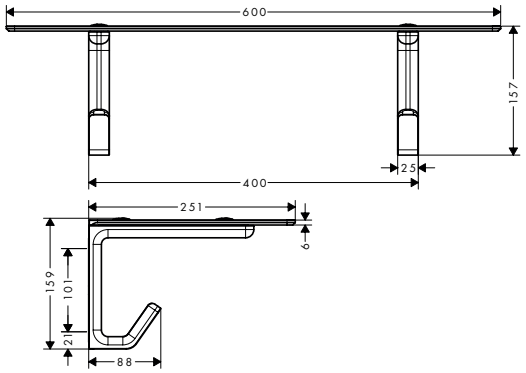

Finish	Code no.
Chrome	42842000
AXOR FinishPlus*	42842XXX

AXOR Universal Softsquare Towel holder twin-handle

Features

/ wall-mounted
/ material: metal
/ holder material: metal
/ swivelling
/ length: 409 mm
/ with mounting material
/ drilling distance: 80 mm
/ diameter drill hole: 6 mm
/ concealed fastening

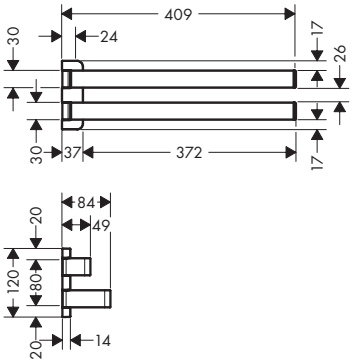

Finish	Code no.
Chrome	42821000
Matt Black	42821670
AXOR FinishPlus*	42821XXX

AXOR Universal Softsquare Towel hook

Features

/ wall-mounted
/ material: metal
/ with mounting material
/ concealed fastening
/ drilling distance: 35 mm
/ diameter drill hole: 6 mm

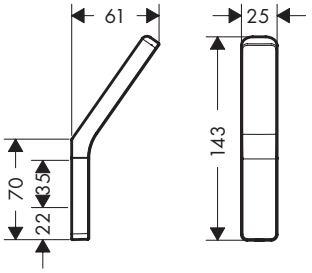

Finish	Code no.
Chrome	42801000
Matt Black	42801670
AXOR FinishPlus*	42801XXX

Measurements within scale drawings are in mm.
Technical specifications and units of measure are subject to change.

AXOR Universal Softsquare Toilet paper holders

Features of all variants

/ wall-mounted
/ with mounting material
/ concealed fastening
/ drilling distance: 35 mm
/ diameter drill hole: 6 mm

without cover

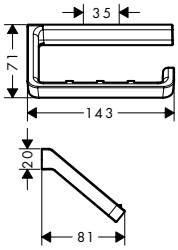

with cover

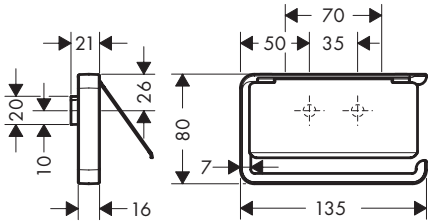

with shelf

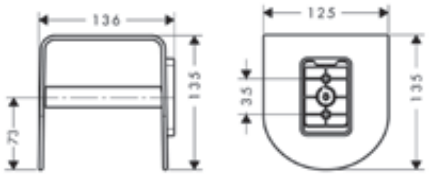

Overview variants

Version	Finish	LVI-nro	Code no.
without cover	Chrome		42846000
	Matt Black		42846670
	AXOR FinishPlus*		42846XXX
with cover	Chrome		42836000
	Matt Black		42836670
	AXOR FinishPlus*		42836XXX
with shelf	Chrome	5773844	42436000
	AXOR FinishPlus*		42436XXX

AXOR Universal Softsquare Toilet brush holder wall-mounted

Features

/ wall-mounted
/ material: metal, glass
/ material recess: glass
/ with removable insert
/ with mounting material
/ concealed fastening
/ drilling distance 108 mm
/ diameter drill hole: 6 mm

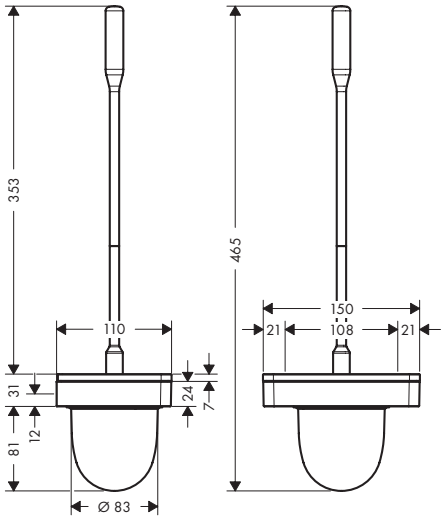

Finish	Code no.
Chrome	42835000
Matt Black	42835670
AXOR FinishPlus*	42835XXX

*AXOR FinishPlus: For further AXOR FinishPlus surfaces please see the AXOR FinishPlus overview on page 27.

AXOR Universal Softsquare Adapter set

Features

/ for assembling AXOR Universal Accessories on a rail
/ for combination of soap dish/shelf no.42803XXX or shelf 300 mm no.42838XXX with roll holder no.42836XXX

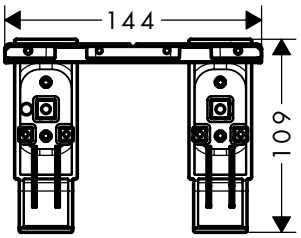

Finish	Code no.
Chrome	42870000
Matt Black	42870670
AXOR FinishPlus*	42870XXX

AXOR Universal Softsquare Cover for rail

Features

/ for covering the mounting holes if a continuous cover is not desired

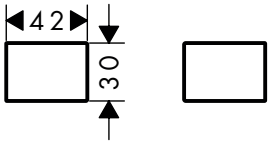

Finish	Code no.
Chrome	42871000
Matt Black	42871670
AXOR FinishPlus*	42871XXX

AXOR Universal Softsquare Mounting kit for two-sided glass installation

Features

/ thickness of glass: 6 - 12 mm
/ diameter drill hole: 6 mm

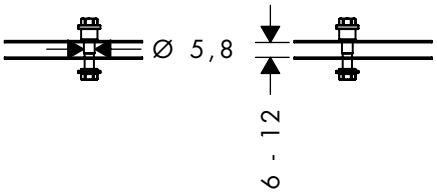

	Code no.
	42841000

Measurements within scale drawings are in mm.
Technical specifications and units of measure are subject to change.

AXOR Montreux Toothbrush tumbler

Features

/ wall-mounted
/ material: metal, porcelain
/ holder material: metal
/ with mounting material
/ concealed fastening
/ drilling distance: 35 mm
/ diameter drill hole: 6 mm

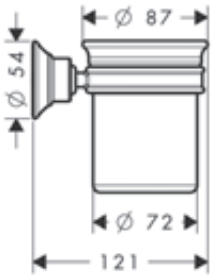

Finish	Code no.
Chrome	42134000
Brushed Nickel	42134820
AXOR FinishPlus*	42134XXX

AXOR Montreux Liquid soap dispenser

Features

/ wall-mounted
/ holder material: metal
/ material container: porcelain
/ type of soap: liquid soap
/ filling capacity 300 ml
/ with mounting material
/ concealed fastening
/ drilling distance: 35 mm
/ diameter drill hole: 6 mm

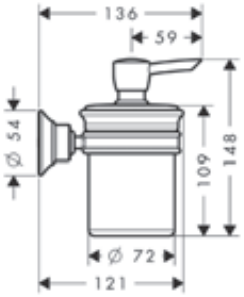

Finish	Code no.
Chrome	42019000
Brushed Nickel	42019820
AXOR FinishPlus*	42019XXX

AXOR Montreux Soap dish

Features

/ wall-mounted
/ material recess: porcelain
/ holder material: metal
/ with mounting material
/ concealed fastening
/ drilling distance: 35 mm
/ diameter drill hole: 6 mm

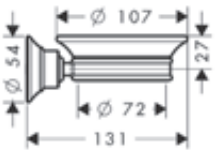

Finish	Code no.
Chrome	42033000
Brushed Nickel	42033820
AXOR FinishPlus*	42033XXX

*AXOR FinishPlus: For further AXOR FinishPlus surfaces please see the AXOR FinishPlus overview on page 27.

AXOR Montreux Corner basket 160/101

Features

/ wall-mounted
/ with mounting material
/ drilling distance: 35 mm
/ diameter drill hole: 6 mm

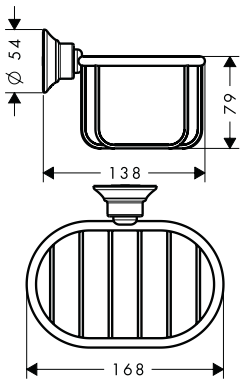

Finish	Code no.
Chrome	42065000
Brushed Nickel	42065820
AXOR FinishPlus*	42065XXX

AXOR Montreux Corner basket 160/83

Features

/ with mounting material
/ suitable for mounting on Unica wall bar Ø 22 mm

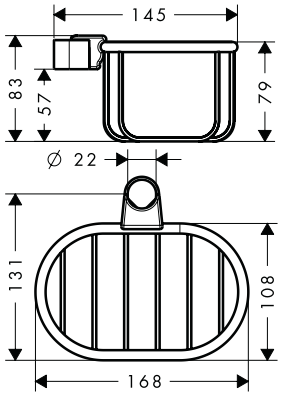

Finish	Code no.
Chrome	42066000
Brushed Nickel	42066820
AXOR FinishPlus*	42066XXX

AXOR Montreux Grab bar

Features

/ wall-mounted
/ material: metal
/ holder material: metal
/ length: 463 mm
/ with mounting material
/ concealed fastening
/ drilling distance: 280 x 170 mm
/ TÜV certified

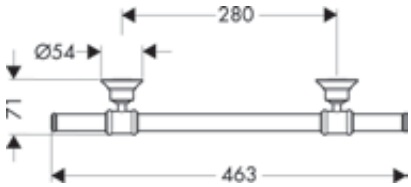

Finish	Code no.
Chrome	42030000
Brushed Nickel	42030820
AXOR FinishPlus*	42030XXX

Measurements within scale drawings are in mm.
Technical specifications and units of measure are subject to change.

AXOR Montreux Bath towel rails

Features of all variants

/ wall-mounted
/ material: metal
/ holder material: metal
/ with mounting material
/ diameter drill hole: 6 mm
/ concealed fastening

600/800

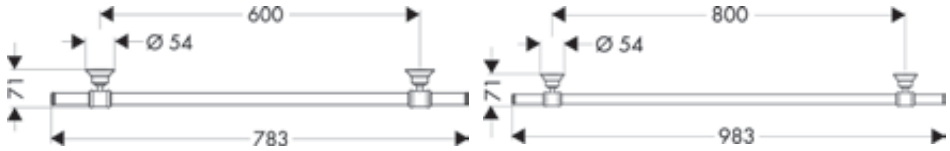

Overview variants

	Product dimensions (mm)	Finish	Code no.
	600	Chrome	42060000
		Brushed Nickel	42060820
		AXOR FinishPlus*	42060XXX
	800	Chrome	42080000
		Brushed Nickel	42080820
		AXOR FinishPlus*	42080XXX

AXOR Montreux Towel holder

Features

/ wall-mounted
/ material: metal
/ holder material: metal
/ fixed
/ length: 433 mm
/ with mounting material
/ diameter drill hole: 10 mm
/ concealed fastening

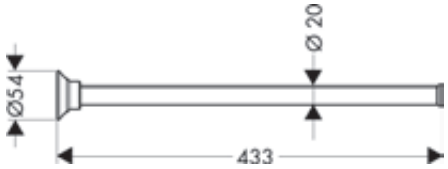

Finish	Code no.
Chrome	42020000
Brushed Nickel	42020820
AXOR FinishPlus*	42020XXX

AXOR Montreux Towel ring

Features

/ wall-mounted
/ material: metal
/ holder material: metal
/ swivelling
/ with mounting material
/ concealed fastening
/ drilling distance: 35 mm
/ diameter drill hole: 6 mm

Finish	Code no.
Chrome	42021000
Brushed Nickel	42021820
AXOR FinishPlus*	42021XXX

*AXOR FinishPlus: For further AXOR FinishPlus surfaces please see the AXOR FinishPlus overview on page 27.

AXOR Montreux Towel hook

Features

/ wall-mounted
/ material: metal
/ with mounting material
/ concealed fastening
/ diameter drill hole: 6 mm

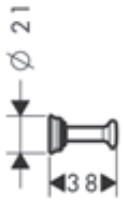

Finish	Code no.
Chrome	42137000
Brushed Nickel	42137820
AXOR FinishPlus*	42137XXX

AXOR Montreux Toilet paper holder with cover

Features

/ wall-mounted
/ material: metal
/ with mounting material
/ concealed fastening
/ drilling distance: 35 mm
/ diameter drill hole: 6 mm

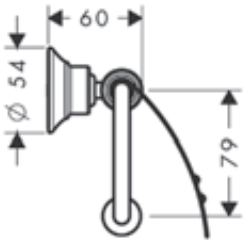

Finish	Code no.
Chrome	42036000
Brushed Nickel	42036820
AXOR FinishPlus*	42036XXX

AXOR Montreux Toilet paper holder

Features

/ wall-mounted
/ material: metal
/ holder material: metal
/ with mounting material
/ concealed fastening
/ diameter drill hole: 10 mm
/ length 159 mm
/ for spare rolls

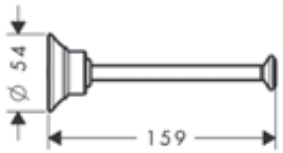

Finish	Code no.
Chrome	42028000
Brushed Nickel	42028820
AXOR FinishPlus*	42028XXX

Measurements within scale drawings are in mm.
Technical specifications and units of measure are subject to change.

AXOR Montreux Toilet brush holder wall-mounted

Features

/ wall-mounted
/ material: metal, porcelain
/ material recess: porcelain
/ with removable insert
/ with mounting material
/ concealed fastening
/ drilling distance 35 mm
/ diameter drill hole: 6 mm

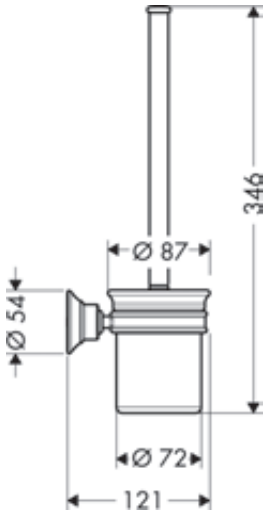

Finish	Code no.
Chrome	42035000
Brushed Nickel	42035820
AXOR FinishPlus*	42035XXX

AXOR Montreux Shaving mirror

Features

/ material: mirror glass
/ material frame: metal
/ mirror is inclinable
/ swivelling
/ enlargement: 1 x magnification
/ with mounting material
/ concealed fastening
/ drilling distance: 35 mm
/ diameter drill hole: 6 mm
/ wall-mounted

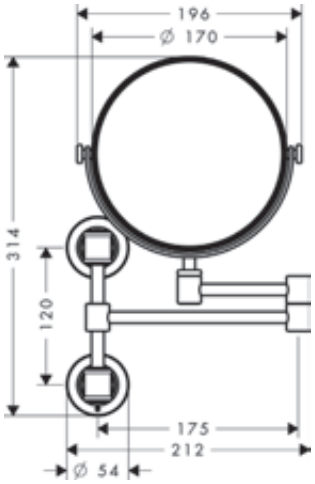

Finish	Code no.
Chrome	42090000
Brushed Nickel	42090820
AXOR FinishPlus*	42090XXX

*AXOR FinishPlus: For further AXOR FinishPlus surfaces please see the AXOR FinishPlus overview on page 27.

AXOR ShowerSolutions Shelves

Features of all variants

/ for use with either vertical or horizontal installation of the basic set
/ material frame: solid brass
/ material shelf: metal
/ with mounting material
/ concealed fastening
/ drilling distance: 72 mm
/ diameter drill hole: 6 mm

240/120

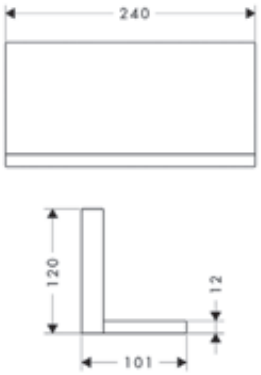

120/120

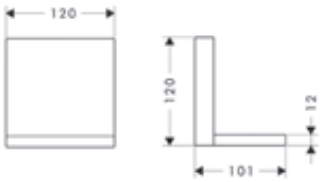

Overview variants

	Product dimensions (mm)	Finish	LVI-nro	Code no.
	240/120	Chrome	5773834	40873000
		AXOR FinishPlus*		40873XXX
	120/120	Chrome	5773833	40872000
		AXOR FinishPlus*		40872XXX

Measurements within scale drawings are in mm.
Technical specifications and units of measure are subject to change.

ELECTRONIC
AXOR

AXOR Electronic faucets

AXOR Starck	316
AXOR Starck Organic	316
AXOR Citterio	317
AXOR Uno	318

AXOR UNO
Minimalist in design, this electronic, wall-mounted mixer has a sensor field on the bottom of the spout.

AXOR STARCK ORGANIC
This minimalist, organic faucets saves a great deal of water: The ample mixer shower jet uses just 3.5 l/min. The faucet is available with and without temperature control.

AXOR STARCK
Also reduced to the basics is the electronic variant of the purist AXOR Starck basin faucets. Available with and without temperature control.

AXOR Electronic faucets combine functionality and technology with exclusive design known for its proven brand quality. The innovative sensor technology is discreetly integrated so that mixer design can be reduced to the basics. Non-contact faucets are not only hygienic, but also save water: The intelligent electronics release water only when it is actually needed, which protects this natural resource.

AXOR ELECTRONIC MIXERS ARE THE PERFECT COMBINATION OF TECHNOLOGY AND DESIGN.

AXOR Electronic Faucets

Functionality, technology and exclusive design

Electronic mixers by AXOR set standards for comfort, hygiene and design. The non-contact operation makes them perfect for use in public areas such as hotels, restaurants or lounges. But they also make a masterful statement in private bathrooms and meet the highest requirements for efficient water consumption. Combined with outstanding design and functionality.

Design: Philippe Starck, Antonio Citterio, PHOENIX

CHARACTERISTIC DESIGN FEATURE:
Reduced to the bare essentials: The faucets do not need handles because sensor technology controls the water.

THE DESIGNERS' IDEA:
Masterpieces of comfort, hygiene and design:
AXOR Electronic faucets combine sensor control with outstanding design – simply excellent.
Masterpieces of non-contact operation.

SPECIAL PROGRAM HIGHLIGHTS:

- AXOR Electronic is available in the design of these collections: AXOR Starck, AXOR Starck Organic, AXOR Citterio and AXOR Uno
- Sensor control: non-contact means extremely hygienic
- Efficient water use: Sensor controlled mixers switch off automatically
- Available in two versions: With temperature preset or temperature control
- Operates with 230 V power connection or battery

Learn more about AXOR Electronic faucets:
axor-design.com

AXOR Starck Electronic basin mixers

Features of all variants

/ ComfortZone 90
/ projection: 103 mm
/ spray type: normal spray
/ maximum flow rate at 3 bar: 5 l/min
/ suitable for continous flow water heaters
/ infrared sensor technology
/ automatic environmental adjustment of infrared sensor
/ adjustable optical range of infrared sensor (2 settings)
/ hygiene rinse activatable (automatic water flow)
/ frequency of hygiene rinse: 24 h
/ flushing time hygiene rinse: 10 s
/ permanent rinse activatable (single water flow for 180 seconds, suitable for thermal disinfection)
/ cleaning mode: manual water stop for washbasin cleaning
/ connection dimension: DN15
/ TÜV certified
/ dirt filters in the connection hoses

pre adjustable

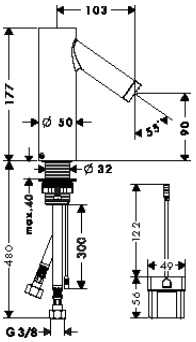

adjustable

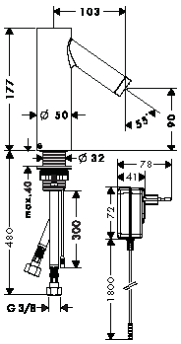

Sustainability

EcoSmart

Technologies

Sensor Activation | AirPower | Comfort Zone | Quick Clean

Overview variants

Power supply	Temperature adjustment	Finish	LVI-nro	Code no.
battery operation	pre adjustable	Chrome	6150223	10106000
		AXOR FinishPlus*		10106XXX
battery operation	adjustable	Chrome	6150222	10101000
		AXOR FinishPlus*		10101XXX
mains connection	pre adjustable	Chrome	6150228	10145000
		AXOR FinishPlus*		10145XXX
mains connection	adjustable	Chrome	6150227	10140000
		AXOR FinishPlus*		10140XXX

10140XXX This product is only available in the AXOR FinishPlus surface Polished Nickel via AXOR Signature.

AXOR Starck Organic Electronic basin mixers

Features of all variants

/ ComfortZone 90
/ spray type: shower spray
/ maximum flow rate at 3 bar: 3,5 l/min
/ with isolated water conduction - without contact with nickel and lead
/ infrared sensor technology
/ automatic environmental adjustment of infrared sensor
/ adjustable optical range of infrared sensor (2 settings)
/ running time: 10 s
/ hygiene rinse activatable (automatic water flow)
/ frequency of hygiene rinse: 24 h
/ flushing time hygiene rinse: 10 s
/ permanent rinse activatable (single water flow for 180 seconds, suitable for thermal disinfection)
/ cleaning mode: manual water stop for washbasin cleaning
/ connection dimension: DN15
/ dirt filters in the connection hoses

pre adjustable

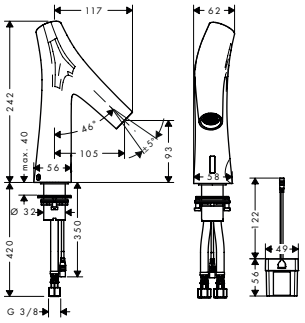

adjustable

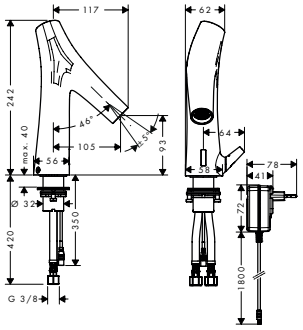

Sustainability

EcoSmart

Technologies

Sensor Activation | Comfort Zone | Quick Clean

Measurements within scale drawings are in mm.
Technical specifications and units of measure are subject to change.

AXOR Starck Organic Electronic basin mixers

Overview variants

Power supply	Temperature adjustment	Finish	LVI-nro	Code no.
battery operation	pre adjustable	Chrome	6150513	12172000
		AXOR FinishPlus*		12172XXX
battery operation	adjustable	Chrome	6150512	12171000
		AXOR FinishPlus*		12171XXX
mains connection	pre adjustable	Chrome	6150515	12174000
		AXOR FinishPlus*		12174XXX
mains connection	adjustable	Chrome	6150514	12173000
		AXOR FinishPlus*		12173XXX

AXOR Citterio Electronic basin mixers

Features of all variants

/ spray type: normal spray
/ maximum flow rate at 3 bar: 5 l/min
/ temperature adjustable via basic set
/ infrared sensor technology
/ automatic environmental adjustment of infrared sensor
/ adjustable optical range of infrared sensor (5 settings)
/ 230 V / 50 Hz mains connection
/ hygiene rinse activatable (automatic water flow)
/ frequency of hygiene rinse: 24 h
/ flushing time hygiene rinse: 10 s
/ permanent rinse activatable (single water flow for 180 seconds, suitable for thermal disinfection)
/ cleaning mode: manual water stop for washbasin cleaning
/ TÜV certified
/ dirt filters in the connection hoses
/ for ideal function please note a minimum distance of 140 mm from the aerators center to the back rim of the wash basin

161

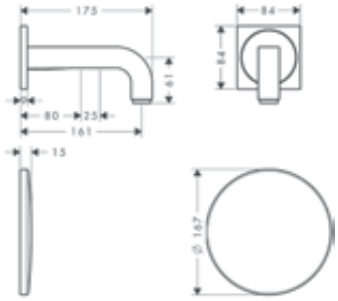

221

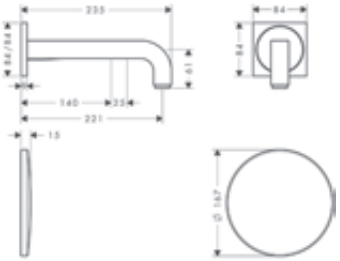

Sustainability

EcoSmart

Technologies

Sensor Activation

AirPower

Overview variants

	Projection (mm)	Finish	LVI-nro	Code no.
	161	Chrome	6150167	39117000
		AXOR FinishPlus*		39117XXX
	221	Chrome	6150168	39118000
		AXOR FinishPlus*		39118XXX

Required parts:		Code no.
	Basic set for electronic basin mixer for concealed installation wall-mounted	16180180

*AXOR FinishPlus: For further AXOR FinishPlus surfaces please see the AXOR FinishPlus overview on page 27.

AXOR Uno Electronic basin mixers for concealed installation wall-mounted

Features of all variants

/ spray type: normal spray
/ maximum flow rate at 3 bar: 5 l/min
/ temperature adjustable via basic set
/ infrared sensor technology
/ automatic environmental adjustment of infrared sensor
/ adjustable optical range of infrared sensor (5 settings)
/ 230 V / 50 Hz mains connection
/ hygiene rinse activatable (automatic water flow)
/ frequency of hygiene rinse: 24 h
/ flushing time hygiene rinse: 10 s
/ permanent rinse activatable (single water flow for 180 seconds, suitable for thermal disinfection)
/ cleaning mode: manual water stop for washbasin cleaning
/ TÜV certified
/ dirt filters in the connection hoses
/ for ideal function please note a minimum distance of 140 mm from the aerators center to the back rim of the wash basin

165

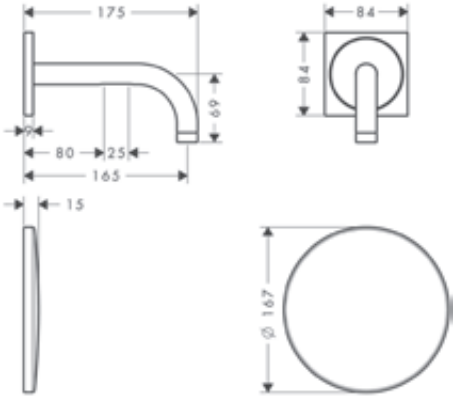

225

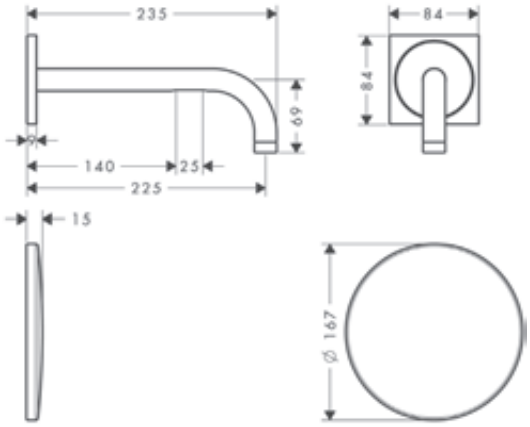

Sustainability

EcoSmart

Technologies

Sensor Activation

AirPower

Certificates/declarations

EPD

Overview variants

	Projection (mm)	Finish	LVI-nro	Code no.
	165	Chrome	6150165	38119000
		Matt Black	6150816	38119670
		Matt White		38119700
		AXOR FinishPlus*		38119XXX
	225	Chrome	6150166	38120000
		Matt Black	6150817	38120670
		Matt White		38120700
		AXOR FinishPlus*		38120XXX

Required parts:		Code no.
	Basic set for electronic basin mixer for concealed installation wall-mounted	16180180

Measurements within scale drawings are in mm.
Technical specifications and units of measure are subject to change.

AXOR Uno Electronic basin mixers for concealed installation wall-mounted

Features of all variants

/ spray type: laminar spray
/ maximum flow rate at 3 bar: 5 l/min
/ temperature adjustable via basic set
/ infrared sensor technology
/ automatic environmental adjustment of infrared sensor
/ adjustable optical range of infrared sensor (5 settings)
/ 230 V / 50 Hz mains connection
/ hygiene rinse activatable (automatic water flow)
/ frequency of hygiene rinse: 24 h
/ flushing time hygiene rinse: 10 s
/ permanent rinse activatable (single water flow for 180 seconds, suitable for thermal disinfection)
/ cleaning mode: manual water stop for washbasin cleaning
/ TÜV certified
/ dirt filters in the connection hoses
/ for ideal function please note a minimum distance of 140 mm from the aerators center to the back rim of the wash basin

161

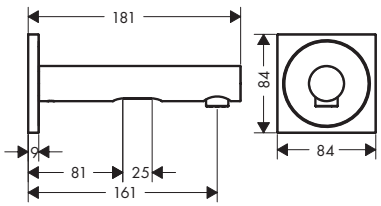

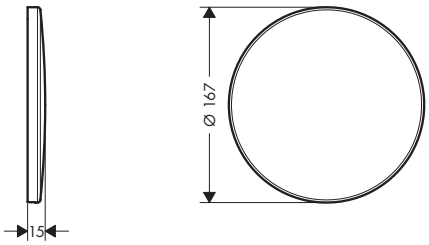

221

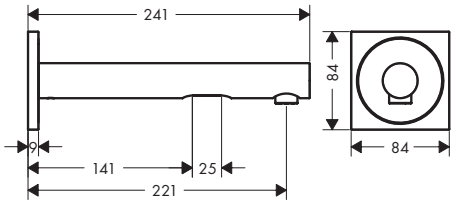

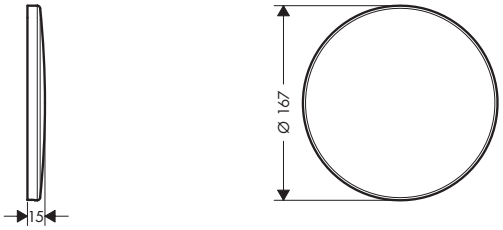

Sustainability

EcoSmart

Technologies

Sensor Activation

Overview variants

	Projection (mm)	Finish	LVI-nro	Code no.
	161	Chrome	6150650	45110000
		AXOR FinishPlus*		45110XXX
	221	Chrome	6150651	45111000
		AXOR FinishPlus*		45111XXX

Required parts:	Code no.
Basic set for electronic basin mixer for concealed installation wall-mounted	16180180

*AXOR FinishPlus: For further AXOR FinishPlus surfaces please see the AXOR FinishPlus overview on page 27.

AXOR Uno Electronic basin mixer with temperature pre-adjustment with mains connection 230 V

Features

/ ComfortZone 100
/ projection: 148 mm
/ spray type: normal spray
/ maximum flow rate at 3 bar: 3,5 l/min
/ temperature adjustable via basic set
/ suitable for continous flow water heaters
/ infrared sensor technology
/ automatic environmental adjustment of infrared sensor
/ adjustable optical range of infrared sensor (2 settings)
/ 230 V / 50 Hz mains connection
/ running time: 10 s
/ hygiene rinse activatable (automatic water flow)
/ frequency of hygiene rinse: 24 h
/ flushing time hygiene rinse: 10 s
/ permanent rinse activatable (single water flow for 180 seconds, suitable for thermal disinfection)
/ cleaning mode: manual water stop for washbasin cleaning
/ connection dimension: DN15
/ dirt filters in the connection hoses

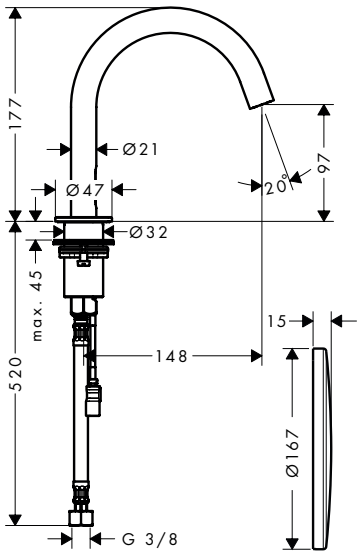

Sustainability

EcoSmart

Technologies

Sensor Activation | AirPower | Comfort Zone

Finish	LVI-nro	Code no.
Chrome	6150571	38010000
Brushed Gold Optic		38010250
Matt Black	6150815	38010670
Matt White		38010700
Stainless Steel Optic		38010800
Brushed Nickel		38010820
Brushed Brass		38010950
Polished Gold Optic		38010990
AXOR FinishPlus*		38010XXX

This product is not available in the AXOR FinishPlus surfaces Red Gold and Black Chrome.

Required parts:	Code no.
Basic set for electronic basin mixer	16182180

Measurements within scale drawings are in mm.
Technical specifications and units of measure are subject to change.

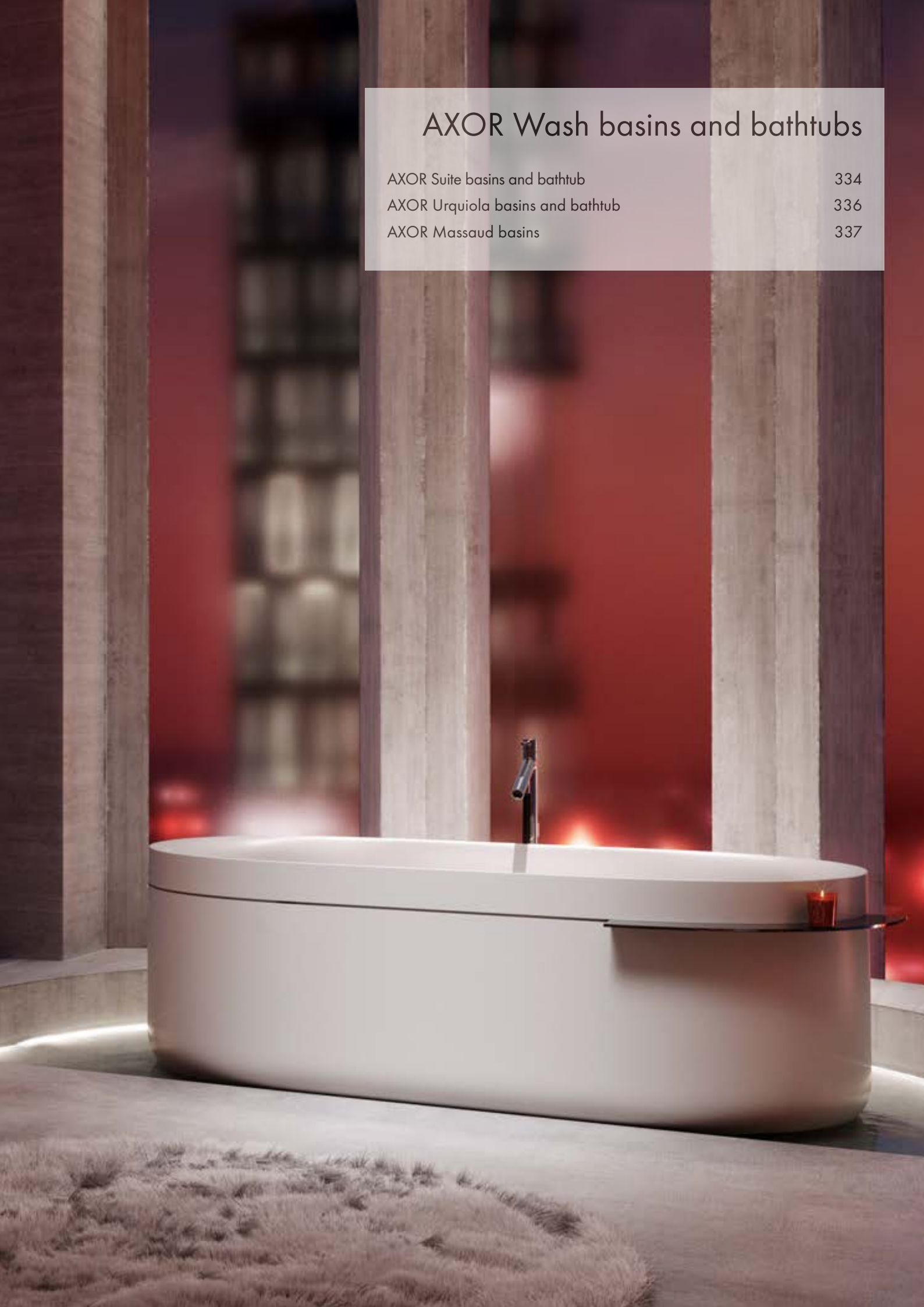

AXOR Wash basins and bathtubs

AXOR Suite basins and bathtub 334
AXOR Urquiola basins and bathtub 336
AXOR Massaud basins 337

AXOR wash basins and bathtubs

One of a kind for the bathroom

In addition to exclusive mixers, showers and accessories, AXOR also offers unconventional wash basins and bathtubs. They perfectly can be combined with mixers from various bathroom collections. AXOR wash basins and bathtubs for complete personalization of bathroom design: Especially when used specifically as individual design objects or to enhance a bathroom design defined by an AXOR collection.

Design: Philippe Starck, Patricia Urquiola, Jean-Marie Massaud

AXOR WASH BASINS AND BATH TUBS ARE EXTRAORDINARY BATHROOM OBJECTS THAT ENHANCE A BATHROOM DESIGN DEFINED BY AN AXOR COLLECTION WITH VERY INDIVIDUAL AESTHETICS.

CHARACTERISTIC DESIGN FEATURE:
Different styles and high-quality materials give the bathtubs and wash basins an individualized design aesthetic, making them a bathroom highlight.

THE DESIGNERS' IDEA:
Bathroom objects with unique selling points: Creating a consistent design for furnishing an entire bathroom. Each wash basin and each bathtub is an eye-catcher on its own within an individualized bathroom design.

SPECIAL PROGRAM HIGHLIGHTS:
- The AXOR Suite wash basin and bathtub combine metal and SolidSurface, representing imperishability and elegance
- The organic shapes of the wash basins in the AXOR Massaud collection are inspired by nature. These products invite us to celebrate the moment and the water
- The design of the AXOR Urquiola wash basins and bathtubs recalls the familiar shape of a nostalgic washtub

Learn more about AXOR wash basins and bathtubs:
axor-design.com

Uniquely universal - matching your character

Through elegant design and specially finished elements, AXOR Suite basins and bathtub, designed by world-renowned creator Philippe Starck, bring harmony and a personal touch to any bathroom interior. Each piece is made with SolidSurface material for resistance and longevity, while smooth contours, small radii and 'soft' inner basins, devoid of lines or ridges, ensure a clean modern look with universal appeal. At the same time, specially finished elements – a shelf on the bathtub, a wrap-
around surface on the washbasin sides – allow users to express their individuality.

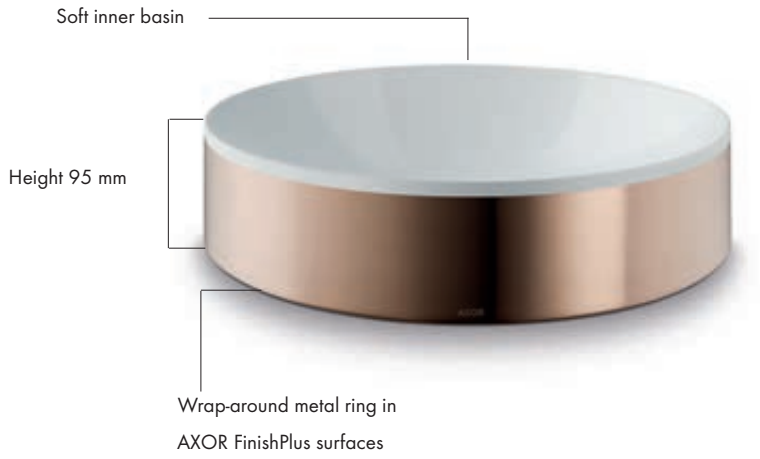

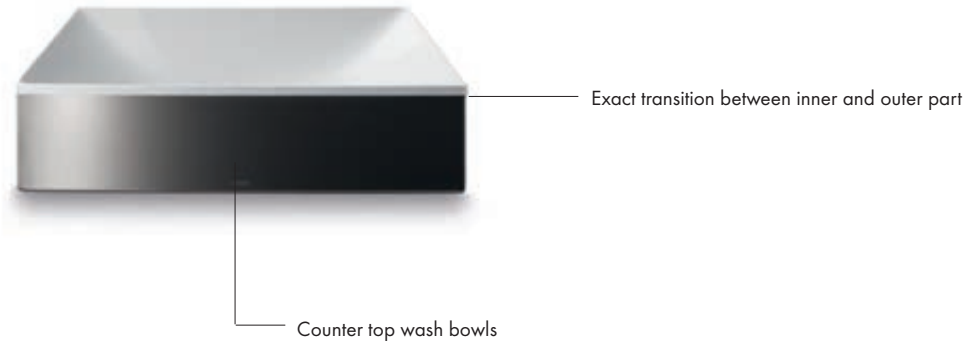

Rectangular or circular, the AXOR Suite basins and bathtub are timeless, universal, elegant forms, characterized by small radii, soft and smooth inner basins. Specially finished elements come in a choice of Matt Black, Chrome or any of the AXOR FinishPlus polished or brushed surfaces.

Aromatique Hand Wash

Strong statement in the bathroom

Its size alone makes the bathtub the centerpiece in most bathrooms. In the elegant AXOR Suite model, Philippe Starck has not only put emphasis on a timeless, universal design, but also on durable materials.
The use of SolidSurface, a durable, stain-resistant surface derived of natural materials and pure acrylic resin meet Starck's claim: “Designed to last forever.” Non-porous and easy-to-clean, SolidSurface is ideal for environments that require the highest standards of hygiene.

The bathtub, circular at the ends and straight on the sides, is generously sized at 1900 x 830 mm. With AXOR Suite, one’s favorite bath-time objects, from books to personal care items, find their place on an optional orderable shelf. With a wide range of possible surface finishes, these special-finish elements can be selected in coordination with all other AXOR products in the bathroom, ensuring a holistic design language throughout.

The bathtub is equipped with a waste set. To order the waste set in the matching AXOR FinishPlus surface please add the corresponding surface code number.

Nostalgic accents for wash basins and bathtubs

Modeled on the eclectic design of the AXOR Urquiola collection, the shape of the wash bowls and bathtub recall the washtubs of bygone days. The integrated handles also serve as practical towel holders.

The AXOR Urquiola wash bowls are available as countertop wash bowls in two sizes or as a wall-mounted wash basin. With ultra-modern, mineral casting material. For a pleasurable feel. Resistant and durable.

A nostalgic statement in the bathroom. Free-standing. Luxurious. Made of mineral casting material with a soft, gel coat surface.

A reference to nature

The design of the mixer collection is meticulously executed in the A XOR Massaud wash basins – as a harmonious connection of organic, avant-garde forms. This creates a natural aesthetic that meets all of the requirements for a modern bathroom. The A XOR Massaud wash basins and bathtub demonstrate yet another successful symbiosis among human beings, water, objects and space.

The AXOR Massaud wash basin: a unique, organic design object. The wash bowl is available as a countertop wash bowl in two sizes. Material: mineral-cast with durable gel coat surface.

AXOR Suite Basins & Bathtub Wash bowls

Features of all variants

/ consists of: wash bowl, design frame
/ material: SolidSurface
/ basin inner height: 80 mm
/ Material frame: metal

/ degree of gloss: matt
/ without tap hole
/ without overflow
/ without waste set

/ only combinable with non-closing waste set
/ installation type: built-on

300

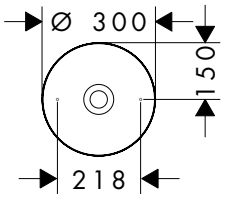

400

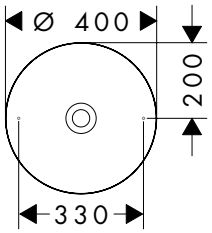

Overview variants

Diameter (mm)	Finish	Code no.
300	Chrome	42000000
	Brushed Black Chrome	42000340
	Matt Black	42000670
	Brushed Bronze	42000140
	AXOR FinishPlus*	42000XXX
400	Chrome	42001000
	Brushed Black Chrome	42001340
	Matt Black	42001670
	Brushed Bronze	42001140
	AXOR FinishPlus*	42001XXX

AXOR Suite Basins & Bathtub Wash bowls

Features of all variants

/ consists of: wash bowl, design frame
/ material: SolidSurface
/ basin inner height: 80 mm
/ Material frame: metal

/ degree of gloss: matt
/ without tap hole
/ without overflow
/ without waste set

/ only combinable with non-closing waste set
/ installation type: built-on

285/285

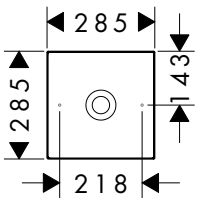

400/400

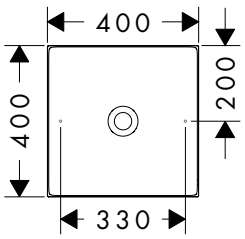

600/400

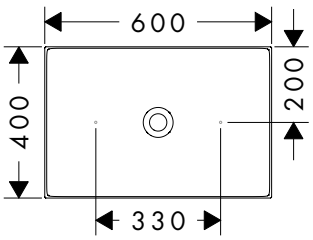

Measurements within scale drawings are in mm.
Technical specifications and units of measure are subject to change.

AXOR Suite Basins & Bathtub Wash bowls

Overview variants

Product dimensions (mm)	Finish	Code no.
285/285	Chrome	42002000
	Brushed Black Chrome	42002340
	Matt Black	42002670
	Brushed Bronze	42002140
	AXOR FinishPlus*	42002XXX
400/400	Chrome	42003000
	Matt Black	42003670
	Brushed Bronze	42003140
	Brushed Black Chrome	42003340
	AXOR FinishPlus*	42003XXX
600/400	Chrome	42004000
	Matt Black	42004670
	Brushed Bronze	42004140
	Brushed Black Chrome	42004340
	AXOR FinishPlus*	42004XXX

AXOR Suite Basins & Bathtub Bathtub 1900/850

Features

/ consists of: bathtub, push-open waste set
/ including siphon with overflow set
/ push open waste set in chosen finish included
/ free-standing bath tub
/ bath tub entry heigth: 631 mm
/ filling level: approx. 355 mm
/ filling capacity: approx.190 l (1 person, 70 kg)
/ weight with water (1 person 70 kg): approx. 440 kg
/ weight without water: 180 kg
/ material: SolidSurface
/ number of people: 2
/ with overflow
/ degree of gloss: matt
/ material thickness: 14 mm
/ length lying surface: 1685 mm
/ width lying surface: 627 mm

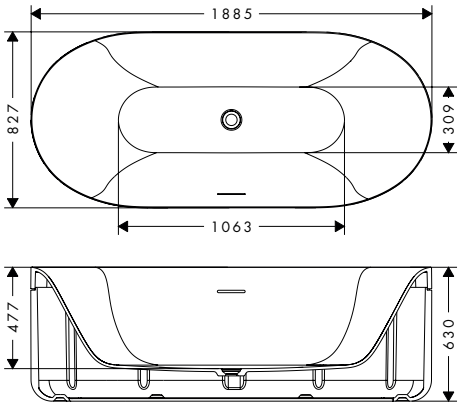

Finish	Code no.
Chrome	42005000
Matt Black	42005670
Brushed Bronze	42005140
Brushed Black Chrome	42005340
AXOR FinishPlus*	42005XXX

AXOR Suite Basins & Bathtub Shelf

Features

/ screw fastening
/ material shelf: metal
/ with mounting material
/ concealed fastening
/ maximum load capacity: 20 kg

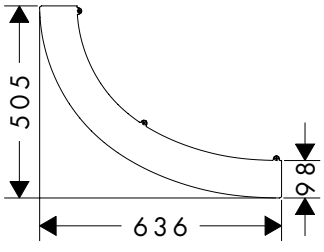

Finish	Code no.
Chrome	42006000
Matt Black	42006670
Brushed Bronze	42006140
Brushed Black Chrome	42006340
AXOR FinishPlus*	42006XXX

For more information about this product, please see the next page.

*AXOR FinishPlus: For further AXOR FinishPlus surfaces please see the AXOR FinishPlus overview on page 27.

AXOR Suite Basins & Bathtub Shelf

Required parts:

Bathtub 1900/850

Finish	Code no.
Chrome	42005000
Matt Black	42005670
Brushed Bronze	42005140
Brushed Black Chrome	42005340
AXOR Finish-Plus*	42005XXX

AXOR Urquiola Wash basin 624/399 wall-mounted

Features

/ material: mineral cast with gelcoat
/ degree of gloss: glossy
/ without tap hole
/ without overflow
/ without shelf
/ CE certified
/ without waste set
/ TÜV certified
/ only in conjunction with basin mixers without pull rod
/ installation type: wall mounted

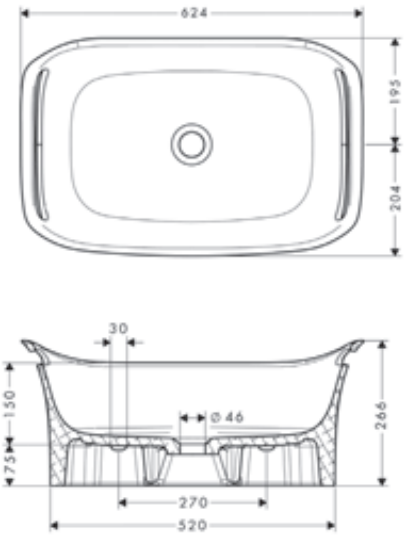

Finish	LVI-nro	Code no.
White	5617602	11302000

AXOR Urquiola Wash bowl 624/408

Features

/ material: mineral cast with gelcoat
/ degree of gloss: glossy
/ without tap hole
/ without overflow
/ without shelf
/ CE certified
/ without waste set
/ TÜV certified
/ only in conjunction with basin mixers without pull rod
/ installation type: built-on

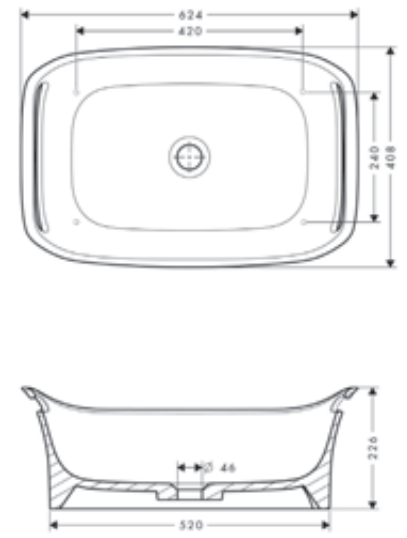

Finish	LVI-nro	Code no.
White	5617600	11300000

Measurements within scale drawings are in mm.
Technical specifications and units of measure are subject to change.

AXOR Urquiola Wash bowl 511/427

Features

/ material: mineral cast with gelcoat
/ degree of gloss: glossy
/ without tap hole
/ without overflow
/ without shelf
/ CE certified
/ without waste set
/ TÜV certified
/ only in conjunction with basin mixers without pull rod
/ installation type: built-on

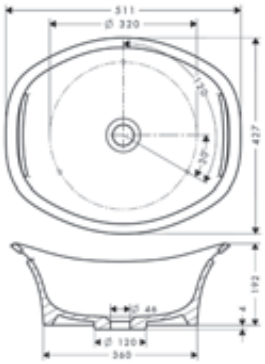

Finish	LVI-nro	Code no.
White	5617601	11301000

AXOR Urquiola Bath tub 1800/600

Features

/ free-standing bath tub
/ filling level: approx. 340 mm
/ filling capacity: approx. 180 l (1 person 70 kg)
/ weight with water (1 person 70 kg): approx. 440 kg
/ weight without water: 187 kg
/ material: mineral cast with gelcoat
/ CE certified
/ TÜV certified

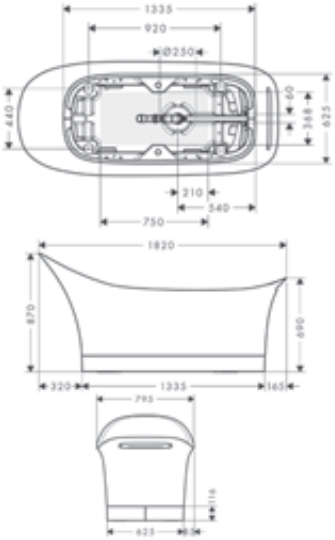

Finish	LVI-nro	Code no.
White	5814100	11440000

AXOR Massaud Wash bowl 570/450

Features

/ material: mineral cast with gelcoat
/ CE certified
/ TÜV certified
/ only in conjunction with basin mixers without pull rod
/ installation type: built-on

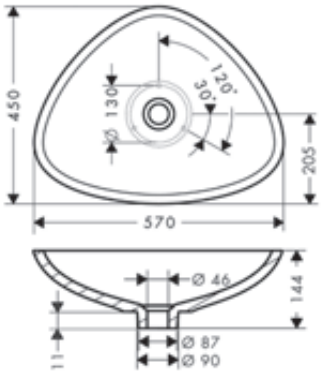

Finish	LVI-nro	Code no.
White	6150271	42305000

*AXOR FinishPlus: For further AXOR FinishPlus surfaces please see the AXOR FinishPlus overview on page 27.

AXOR Massaud Wash bowl 800/450

Features

/ material: mineral cast with gelcoat
/ degree of gloss: glossy
/ without tap hole
/ without overflow
/ without shelf
/ CE certified
/ without waste set
/ TÜV certified
/ only in conjunction with basin mixers without pull rod
/ installation type: built-on

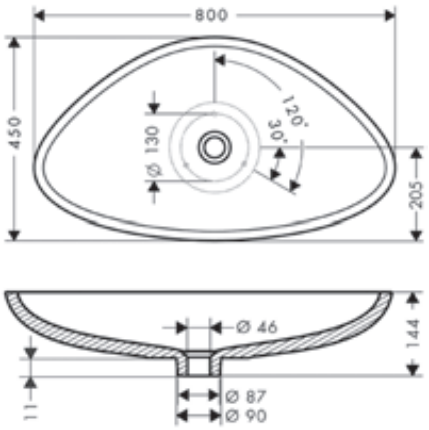

Finish	LVI-nro	Code no.
White	6150269	42300000

Measurements within scale drawings are in mm.
Technical specifications and units of measure are subject to change.

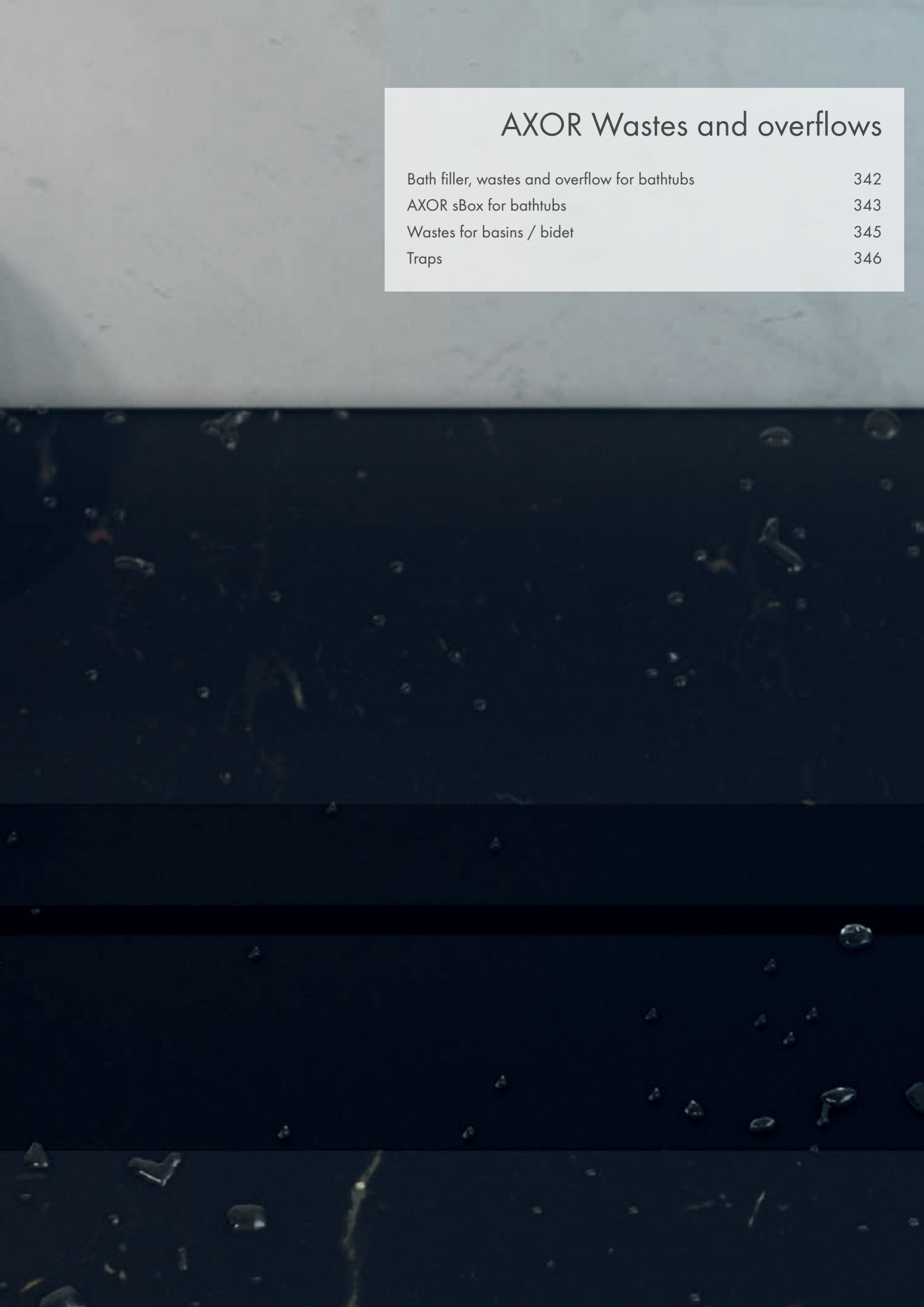

AXOR Wastes and overflows

Bath filler, wastes and overflow for bathtubs	342
AXOR sBox for bathtubs	343
Wastes for basins / bidet	345
Traps	346

Complete set bath filler, waste and overflow set for standard bath tubs

Features

/ consists of: bath tub trap, basic set, finish set
/ TÜV certified

/ suitable for standard bath tubs, with bellows for bath tubs with slanted bath rim
/ bowden cable length 520 mm

/ odour trap - backwater height is 50 mm
/ supply hose water connection left DN20

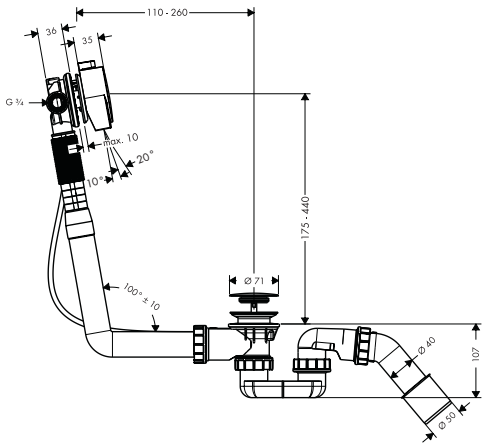

Finish	Code no.
Chrome	58307000
Matt Black	58307670
Matt White	58307700
AXOR FinishPlus*	58307XXX

Complete set bath filler, waste and overflow set for special bath tubs

Features

/ consists of: basic set, bath tub trap, finish set
/ TÜV certified

/ suitable for special bath tubs, with bellows for bath tubs with slanted bath rim

/ bowden cable length 780 mm
/ supply hose water connection left DN20

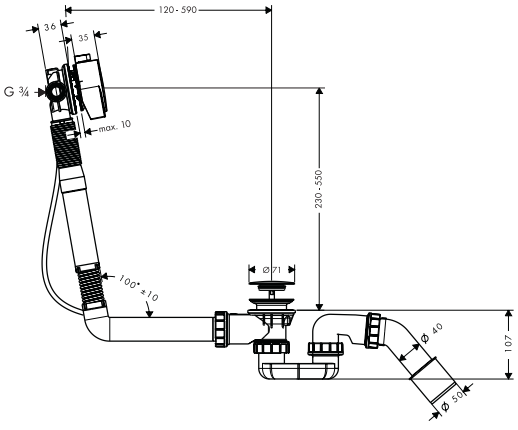

Finish	Code no.
Chrome	58317000
Matt Black	58317670
Matt White	58317700
AXOR FinishPlus*	58317XXX

Flexible connection tube 800 mm

Features

/ length 800 mm
/ version: 90° angle

	Code no.
	58308000

Measurements within scale drawings are in mm.
Technical specifications and units of measure are subject to change.

Finish sets

Features of all variants

/ consists of: hose box, shower hose, escutcheon
/ suitable for rim or tile mounted installation
/ 1 function
/ sBox for quiet, smooth and protected hose guidance
/ connection dimension: DN15
/ no additional maintenance opening required
/ bath rim width at least 80 mm
/ clamping range: 0 - 30 mm
/ maximum pull-out length of hand shower 1.45 m
/ removable for service at any time
/ protected against backflow, according to DIN EN 1717
/ maximum flow rate at 3 bar: 9,5 l/min

square

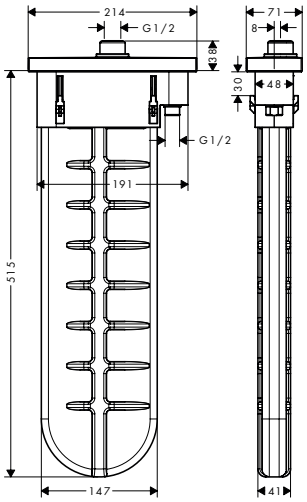

oval

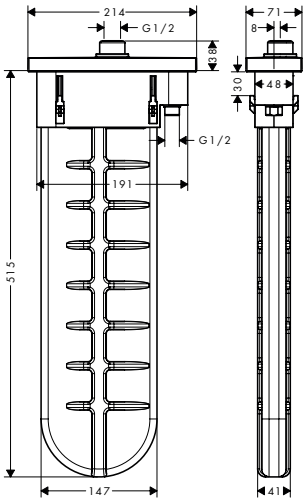

Overview variants

	Shape	Finish	Code no.
	square	Chrome	28012000
		AXOR FinishPlus*	28012XXX
	oval	Chrome	28022000
		AXOR FinishPlus*	28022XXX

Required parts: Code no.

Rim and tile mounted bath basic set 15490180

Rim and tile mounted bath basic set

Features

/ suitable for rim or tile mounted installation
/ 1 function
/ connection thread R ½
/ connection dimension: DN15
/ connection hose length: 600 mm
/ bath rim width at least 80 mm
/ drilling diameter on bath tub: two drilled holes Ø 50/51 mm and connection by sawing out required (consider template)
/ clamping range: 0 - 30 mm

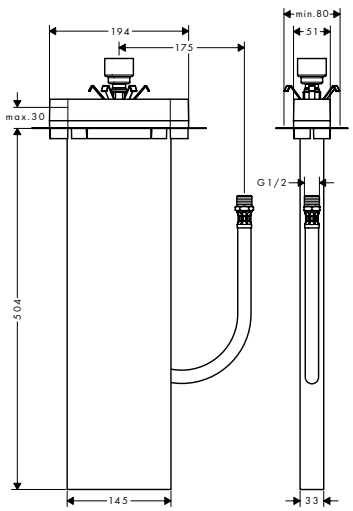

Code no.
15490180

*AXOR FinishPlus: For further AXOR FinishPlus surfaces please see the AXOR FinishPlus overview on page 27.

Installation plate for tile mounted installation

Features

/ dimension: 350 x 120 mm

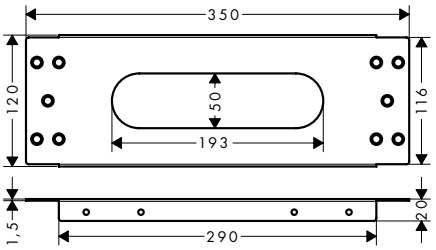

	Code no.
	28014000

Mounting angle set for installation plate for tile mounted installation

Features

/ maximum mounting height: 750 mm
/ minimum mounting height: 400 mm
/ packaging unit: 2 pieces

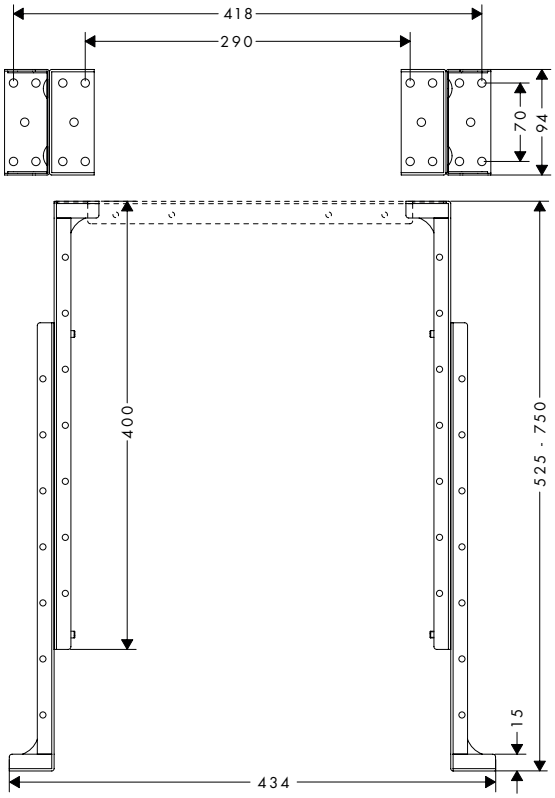

	Code no.
	28011000

Complete set waste and overflow set for standard bath tubs

Features

/ consists of: basic set, finish set
/ TÜV certified
/ suitable for standard bath tubs
/ PE screw connection G 1½ x 40/ 50 mm
/ flexible overflow hose
/ bowden cable length 520 mm
/ odour trap - backwater height is 50 mm

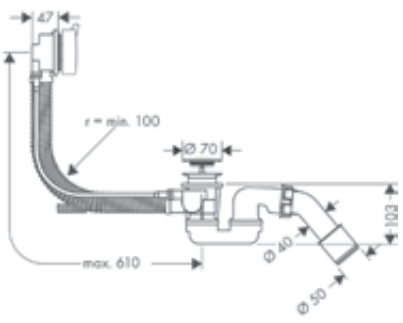

Finish	Code no.
Chrome	58316000
Brushed Bronze	58316140
Brushed Black Chrome	58316340
Matt Black	58316670
Matt White	58316700
Brushed Nickel	58316820
Polished Gold Optic	58316990
AXOR FinishPlus*	58316XXX

Measurements within scale drawings are in mm.
Technical specifications and units of measure are subject to change.

Complete set waste and overflow set for special bath tubs

Features

/ consists of: basic set, bath tub trap, finish set
/ suitable for special bath tubs
/ PE screw connection G 1½ x 40/ 50 mm
/ flexible overflow hose
/ bowden cable length 780 mm

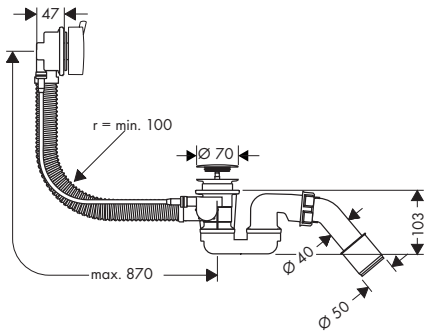

Finish	Code no.
Chrome	58318000
Brushed Bronze	58318140
Brushed Black Chrome	58318340
Matt Black	58318670
Matt White	58318700
Brushed Nickel	58318820
Polished Gold Optic	58318990
AXOR FinishPlus*	58318XXX

Waste set pop-up for basin and bidet mixers

Features

/ operation via pull-rod
/ for basins with overflow hole
/ drain plug material brass
/ connection dimension G 1¼
/ with overflow

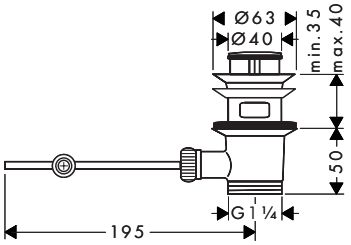

Finish	Code no.
Chrome	51302000
AXOR FinishPlus*	51302XXX

Waste set push-open for basin and bidet mixers

Features

/ operation with pressure plug
/ for basins with overflow hole
/ drain plug material brass
/ connection dimension G 1¼
/ with overflow

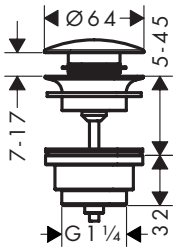

Finish	Code no.
Chrome	51300000
Matt Black	51300670
Matt White	51300700
Brushed Nickel	51300820
AXOR FinishPlus*	51300XXX

*AXOR FinishPlus: For further AXOR FinishPlus surfaces please see the AXOR FinishPlus overview on page 27.

Waste set non-closing for washbasins

Features

/ non-closing valve
/ for washbasins without overflow
/ drain plug material stainless steel
/ connection dimension G 1¼
/ with overflow

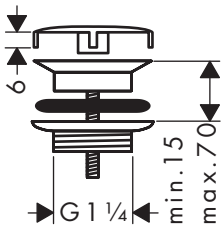

Finish	Code no.
Chrome	51301000
Matt Black	51301670
Matt White	51301700
AXOR FinishPlus*	51301XXX

Design trap Flowstar

Features

/ adjustment distance 65 - 165 mm
/ distance to wall 330 mm
/ odour trap - backwater height is 70 mm
/ connection dimension entry: G 1¼

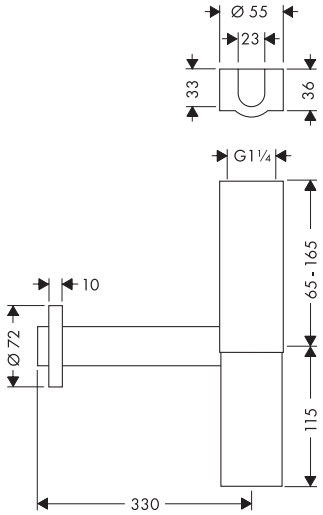

Finish	Code no.
Chrome	51303000
Brushed Nickel	51303820
AXOR FinishPlus*	51303XXX

Design trap Flowstar S

Features

/ adjustment distance 60 - 165 mm
/ distance to wall 330 mm
/ odour trap - backwater height is 75 mm
/ connection dimension entry: G 1¼

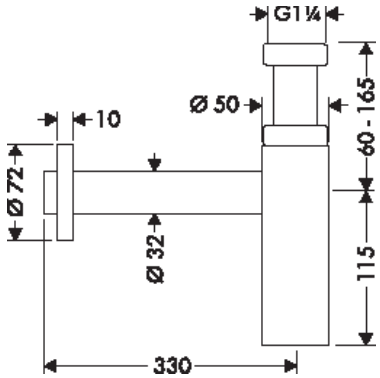

Finish	Code no.
Chrome	51305000
Matt Black	51305670
Matt White	51305700
Brushed Nickel	51305820
AXOR FinishPlus*	51305XXX

Measurements within scale drawings are in mm.
Technical specifications and units of measure are subject to change.

Cover

Features

/ for angle valve
/ packaging unit: 1 piece

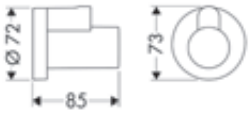

Finish	Code no.
Chrome	51306000
Matt Black	51306670
Matt White	51306700
AXOR FinishPlus*	51306XXX

*AXOR FinishPlus: For further AXOR FinishPlus surfaces please see the AXOR FinishPlus overview on page 27.

AXOR Basic sets

iBox universal	352
Basic sets for basin faucets	355
Basic sets for bathtub faucets	358
Basic sets for shower faucets	358
Basic sets for shower drains	363
Basic sets for overhead showers	364

Piiloasenteisten suihkujen ja hanojen asennus Suomessa Piiloasenteisten suihkujen ja hanojen asennuksessa on otettava huomioon Suomen rakentamismääräyskokoelman säädökset. Niiden mukaan piiloon jäävät liitokset tulee koteloida ja mahdollinen vuotovesi ohjata suojatusti näkyvään paikkaan. Piiloasenteiset ratkaisut voidaan toteuttaa esimerkiksi käyttämällä Joramark Box 300 -järjestelmää.

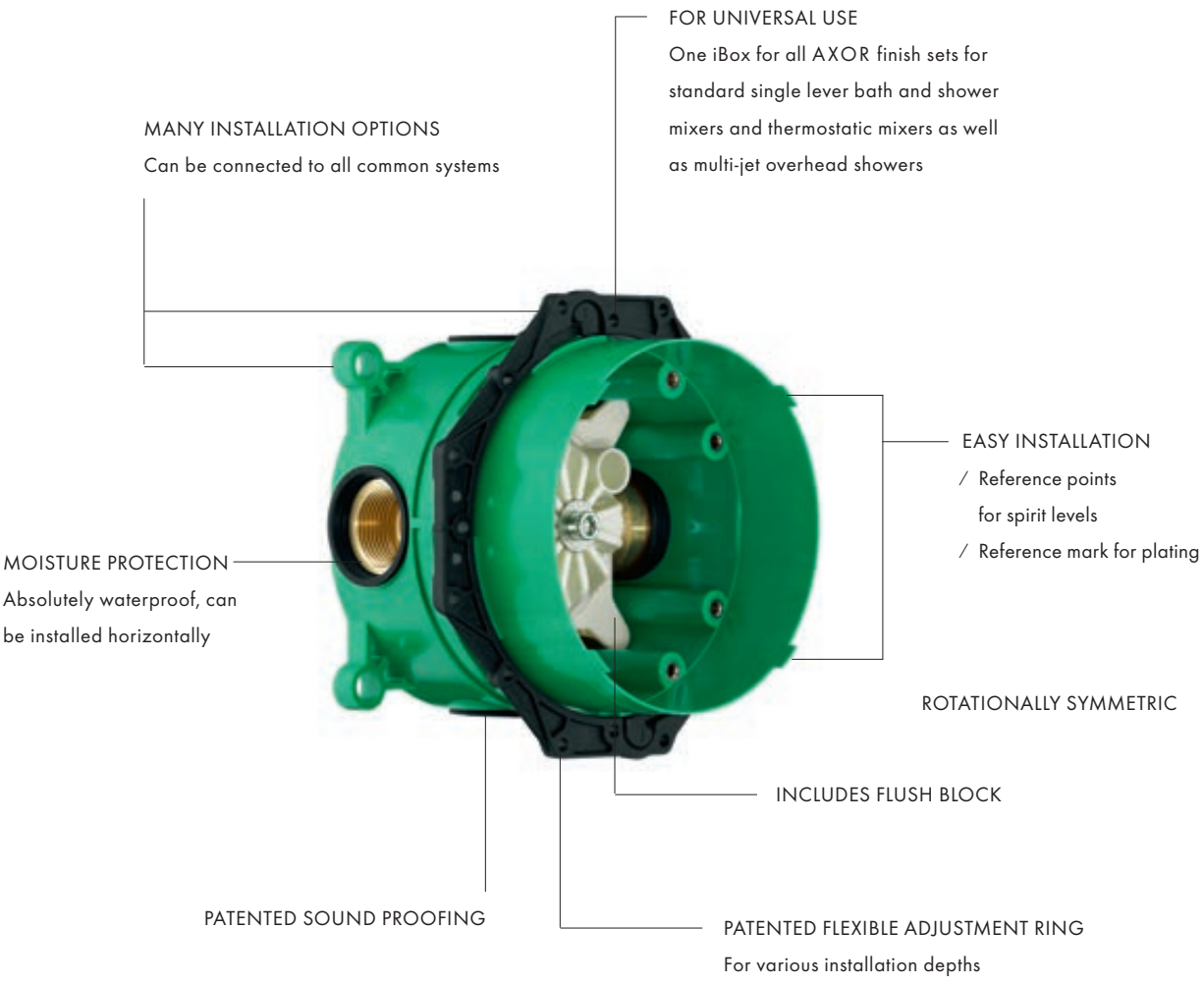

AXOR stands for perfection in every dimension. One example: iBox universal. One basic set for numerous types of concealed installations. Uncompromising, reliable and definitely easy to install.

AXOR basic sets

Technology with a system

The perfection of AXOR continues into the wall and below the bathtub or wash basin, always making an appearance where mixers and showers are installed. The AXOR basic sets are based on the many years of expertise gathered by the Hansgrohe Group. They are produced according to the highest quality standards.

SPECIAL PROGRAM HIGHLIGHTS:
iBox universal

- One basic set for numerous types of concealed installations. Especially easy to install
- Can be used for more than 15 different complete sets for concealed installations of showers, bathtubs and thermostatic mixers
- Easy preinstallation increases flexibility in the process for selecting mixers
- Greater freedom of movement when showering
- Effortless replacement with new mixers for renovations
- Simplified project planning because one basic set is used for all installations
- Can be used in both private and public areas
- Meets common standards worldwide

Learn more about AXOR basic sets, waste sets and overflow sets:
pro.hansgrohe.com

Basic set

Features

/ suitable for all shower, bath tub and thermostat finish sets for concealed installation
/ connection thread Rp ¾
/ connection dimension: DN20
/ rotationally-symmetric installation
/ sound-decoupled installation

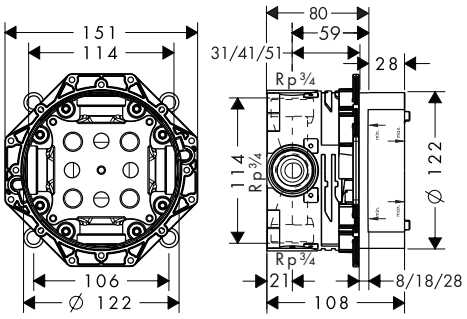

Certificates/declarations

EPD

Code no.
01700180

Basic set with shut-off unit

Features

/ suitable for all shower, bath tub and thermostat finish sets for concealed installation
/ connection thread Rp ¾
/ connection dimension: DN20
/ sound-decoupled installation

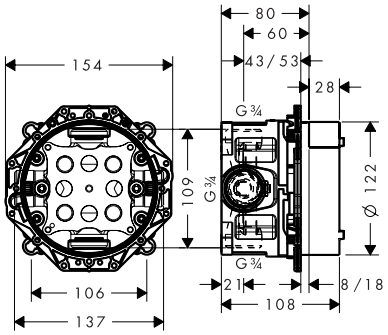

Code no.
01750180

Assembly aid for iBox universal + iBox universal 2

Features

/ spirit levels for correct horizontal and vertical alignment of the iBox universal
/ with fixations to simply put the assembly aid on the iBox universal
/ markings for the tile spacer
/ 4 more fixation aids all around, thus against rotation

LVI-nro	Code no.
6550165	93500000

Measurements within scale drawings are in mm.
Technical specifications and units of measure are subject to change.

Extension 25 mm for basic set iBox universal

Features

/ extension for basic set
/ extension length: 25 mm

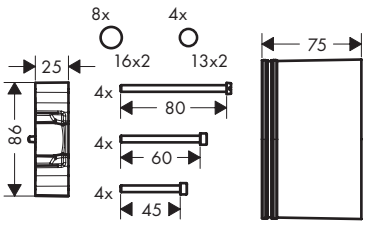

	Code no.
	13587000

Extension element

Features

/ for installation between tiles and finish set
/ suitable for all square finish sets for concealed installation with round edges
/ dimension: 172 x 172 mm
/ extension length: 22 mm

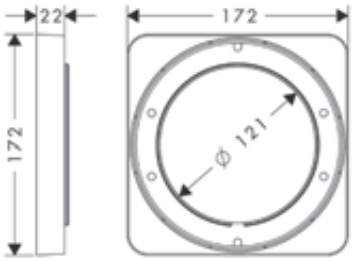

Finish	LVI-nro	Code no.
Chrome	6350479	98860000
AXOR Finish-Plus*		98860XXX

Extension element

Features

/ for installation between tiles and finish set
/ suitable for all square finish sets
/ dimension: 172 x 172 mm
/ extension length: 22 mm

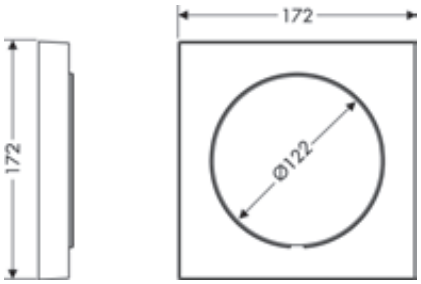

Finish	LVI-nro	Code no.
Chrome	6350477	97407000

*AXOR FinishPlus: For further AXOR FinishPlus surfaces please see the AXOR FinishPlus overview on page 27.

Extension element

Features

/ for situations of limited depth for concealed installation
/ diameter: 80 mm
/ extension length: 22 mm
/ material: metal escutcheon

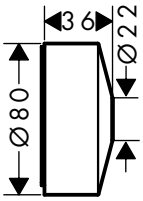

Finish	Code no.
Chrome	13610000
Matt Black	13610670
Matt White	13610700
AXOR FinishPlus*	13610XXX

Escutcheon 90 mm

Features

/ for larger tile coverage
/ diameter: 90 mm
/ material: metal escutcheon

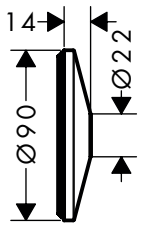

Finish	Code no.
Chrome	13611000
Matt Black	13611670
Matt White	13611700
AXOR FinishPlus*	13611XXX

Fastening rail set for iBox universal

Features

/ quick installation and alignment of the iBox universal in various installation situations
/ for bridging large or wide wall recesses
/ individually bendable for pre-wall mounting

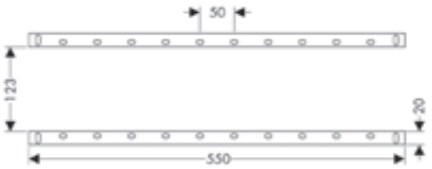

	Code no.
	93171000

Measurements within scale drawings are in mm.
Technical specifications and units of measure are subject to change.

Basic set for electronic basin mixer for concealed installation wall-mounted

Features

/ TÜV certified
/ suitable for infrared wall spout
/ connection dimension: DN20
/ maximum flow rate at 3 bar: 5 l/min
/ minimum mounting depth: 80 mm
/ maximum mounting depth: 108 mm

Certificates/declarations

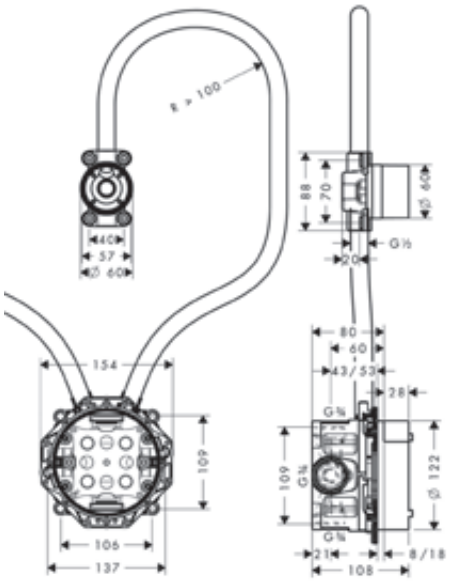

LVI-nro	Code no.
6150204	16180180

Extension 25 mm for basic set for electronic basin mixer wall-mounted

Features

/ extension for basic set
/ suitable for all wall-mounted electronic mixers
/ extension length: 25 mm

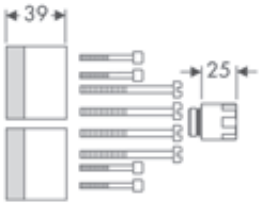

Code no.
13594000

Basic set for electronic basin mixer

Features

/ empty tube EN20 for power supply
/ connection dimension: DN20
/ minimum mounting depth: 80 mm
/ maximum mounting depth: 108 mm

Certificates/declarations

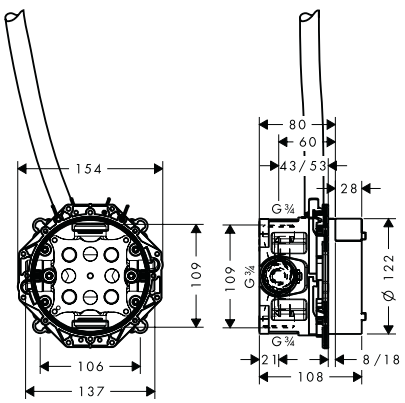

LVI-nro	Code no.
6150521	16182180

*AXOR FinishPlus: For further AXOR FinishPlus surfaces please see the AXOR FinishPlus overview on page 27.

Basic set for single lever basin mixer for concealed installation wall-mounted

Features

/ variable positioning of the mixer system, can be left or right of the spout
/ easy orientation due to support surfaces for the spirit level
/ with building protection cover against contamination during assembly
/ with dimension indication for exact determination of the installation depth
/ with pre-mounted fastening lugs for mounting in drywall and solidwall
/ sound-decoupled installation
/ connection dimension: DN15
/ minimum mounting depth: 44 mm
/ maximum mounting depth: 72 mm

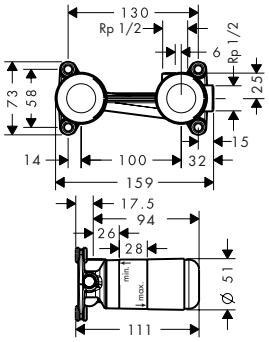

Certificates/declarations

EPD

LVI-nro	Code no.
6150516	13623180

Extension set 25 mm for single lever basin mixer wall-mounted

Features

/ extension length: 25 mm

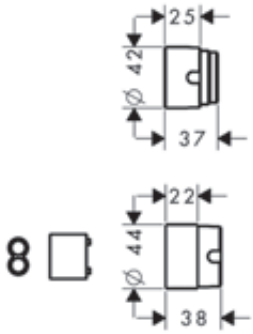

Code no.
13586000

Basic set for basin mixer for concealed installation wall-mounted Select

Features

/ sound-decoupled installation
/ connection dimension: G ½

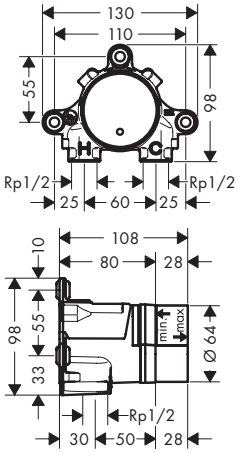

LVI-nro	Code no.
6150814	13625180

Measurements within scale drawings are in mm.
Technical specifications and units of measure are subject to change.

Extension 25 mm for basic set basin mixer for concealed installation wall-mounted Select

Features

/ extension for basic set
/ extension length: 25 mm

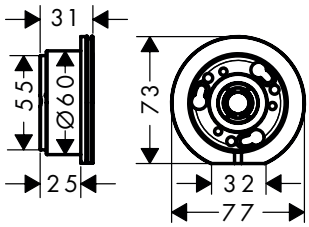

Code no.
13609000

Basic set for 3-hole basin mixer for concealed installation wall-mounted

Features

/ suitable for all 3-hole wash basin mixers for wall mounting
/ connection dimension: DN15/DN20
/ connection from above or below
/ minimum mounting depth: 70 mm
/ maximum mounting depth: 95 mm

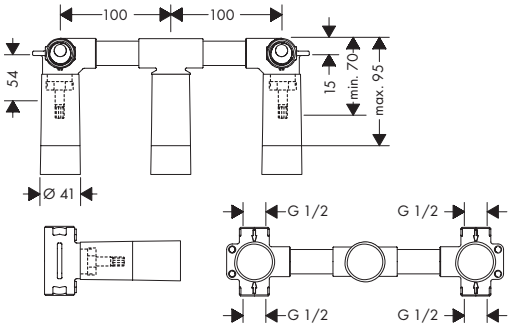

Certificates/declarations

EPD

LVI-nro	Code no.
6150355	10303180

Extension set 25 mm for basic set for 3-hole basin mixer wall-mounted

Features

/ connection dimension: DN15
/ extension length: 25 mm

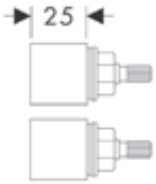

Code no.
96259000

Seal

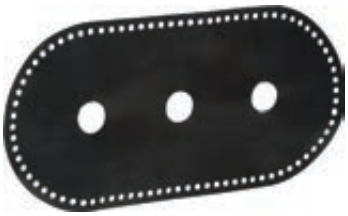

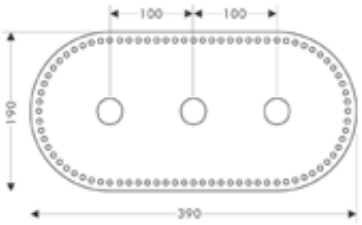

LVI-nro	Code no.
6150354	96383000

Basic set for mixers floor-standing

Features

/ for mounting on unfinished floor
/ suitable for single lever bath mixer, single lever basin mixer and bath spout floor-standing
/ connection dimension: DN15
/ minimum mounting depth: 53 mm
/ maximum mounting depth: 133 mm

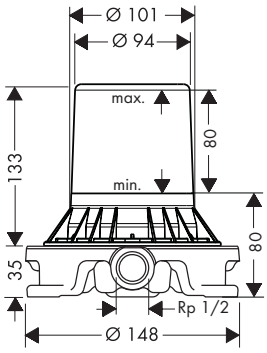

Certificates/declarations

EPD

LVI-nro	Code no.
6350115	10452180

Sealing foil for basic set bath mixer floor-standing

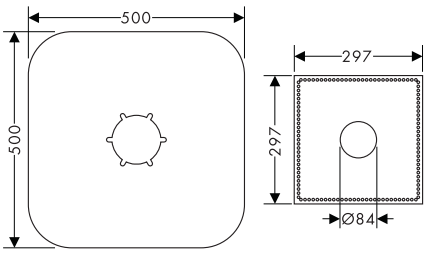

LVI-nro	Code no.
6350114	96441000

Basic set for thermostat for exposed/ concealed installation for 2 functions

Features

/ connection dimension: Rp ½
/ sound-decoupled installation
/ minimum mounting depth: 46 mm
/ maximum mounting depth: 74 mm

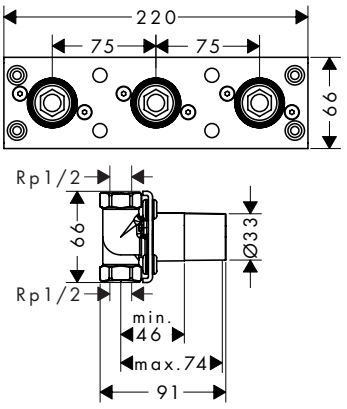

Code no.
45442180

Measurements within scale drawings are in mm.
Technical specifications and units of measure are subject to change.

Basic set for thermostat for exposed/ concealed installation for 3 functions

Features

/ suitable for AXOR Edge Thermostat for 3 functions exposed/concealed installation
/ connection dimension: Rp ½
/ sound-decoupled installation

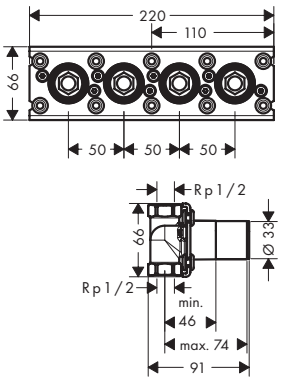

Code no.
45443180

Basic set for thermostatic module Select for 2 functions

Features

/ 2 functions
/ connection thread Rp ¾
/ connection dimension: DN15/DN20
/ horizontal installation
/ sound-decoupled installation
/ minimum mounting depth: 92 mm
/ maximum mounting depth: 120 mm

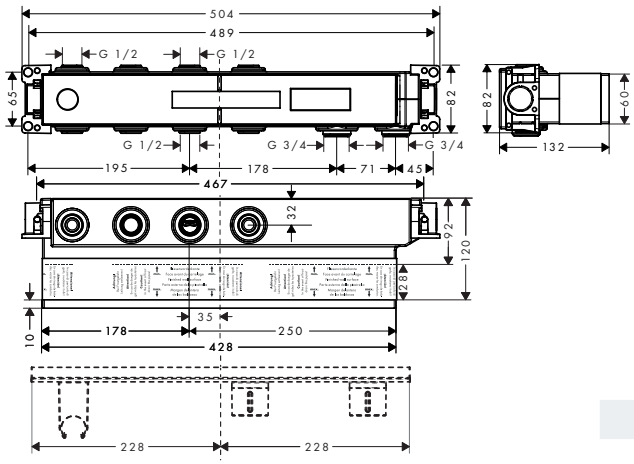

Certificates/declarations

Code no.
18310180

Basic set for thermostatic module Select for 3 functions

Features

/ 3 functions
/ connection thread Rp ¾
/ connection dimension: DN15/DN20
/ horizontal installation
/ sound-decoupled installation
/ minimum mounting depth: 92 mm
/ maximum mounting depth: 120 mm

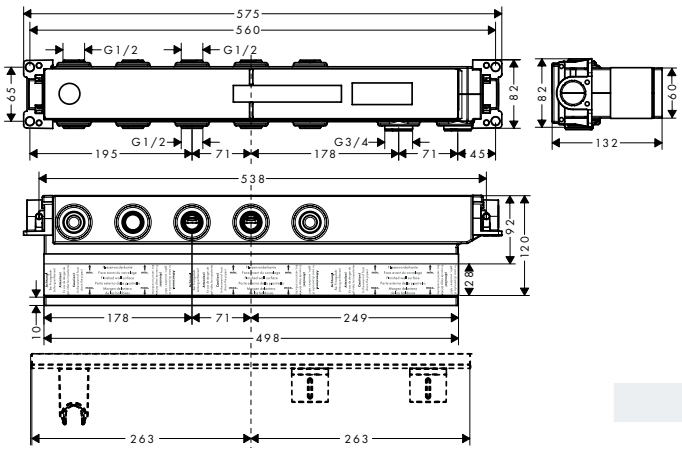

Certificates/declarations

Code no.
18311180

*AXOR FinishPlus: For further AXOR FinishPlus surfaces please see the AXOR FinishPlus overview on page 27.

Basic set for thermostatic module Select for 4 functions

Features

/ 4 functions
/ connection thread Rp ¾
/ connection dimension: DN15/DN20
/ horizontal installation
/ sound-decoupled installation
/ minimum mounting depth: 92 mm
/ maximum mounting depth: 120 mm

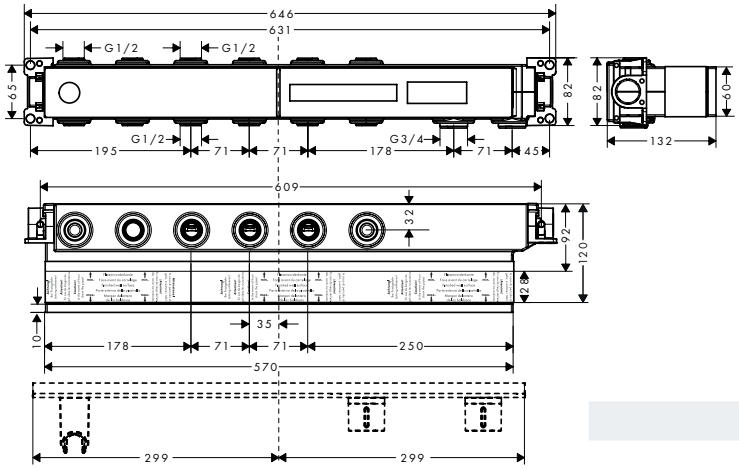

Certificates/declarations

EPD

Code no.
18312180

Basic set for thermostatic module Select for 5 functions

Features

/ 5 functions
/ connection thread Rp ¾
/ connection dimension: DN15/DN20
/ horizontal installation
/ sound-decoupled installation
/ minimum mounting depth: 92 mm
/ maximum mounting depth: 120 mm

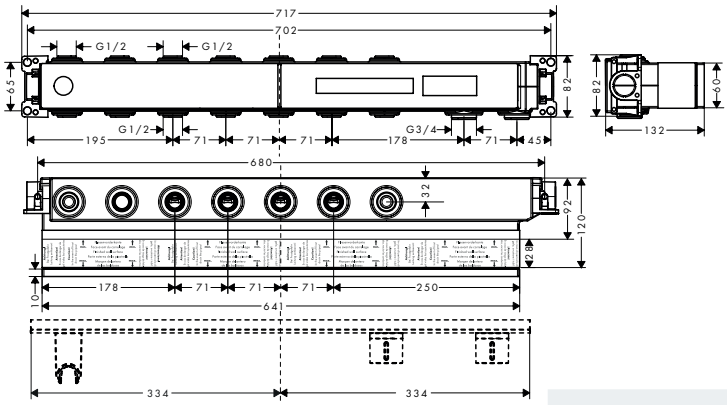

Certificates/declarations

EPD

Code no.
18313180

Measurements within scale drawings are in mm.
Technical specifications and units of measure are subject to change.

Basic set for thermostatic module 360/120 for concealed installation

Features

/ connection from left or right
/ 3 outlets can be used simultaneously
/ connection dimension: DN20
/ flow rate at free through-flow: 59 l/min
/ spindle valves
/ horizontal or vertical installation
/ sound-decoupled installation
/ in a joined installation it serves as a waterconducting unit and allows dimensionally accurate positioning

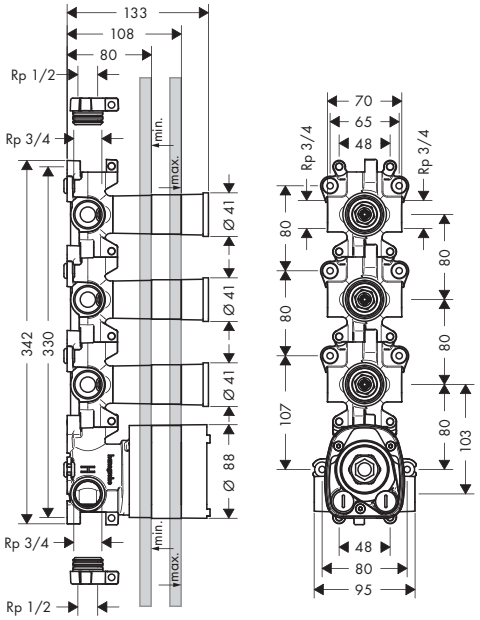

Certificates/declarations

LVI-nro	Code no.
6350094	10750180

Basic set for thermostatic module 120/120 for concealed installation

Features

/ connection dimension: DN20
/ flow rate at free through-flow: 59 l/min
/ horizontal or vertical installation
/ sound-decoupled installation
/ in a joined installation it serves as a waterconducting unit and allows dimensionally accurate positioning

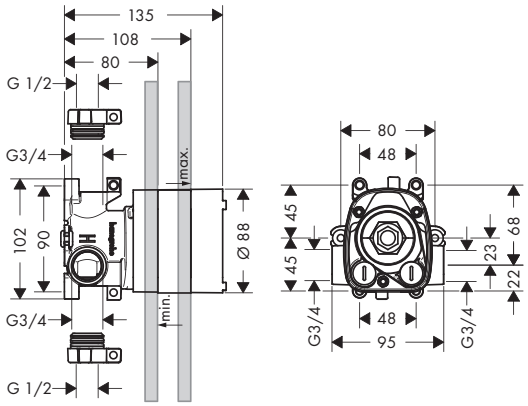

LVI-nro	Code no.
6350096	10754180

*AXOR FinishPlus: For further AXOR FinishPlus surfaces please see the AXOR FinishPlus overview on page 27.

Basic sets for thermostatic module 380/120 for concealed installation

Features of all variants

/ 2 outlets can be used simultaneously
/ connection dimension: DN20
/ flow rate at free through-flow: 59 l/min
/ horizontal or vertical installation
/ sound-decoupled installation
/ in a joined installation it serves as a waterconducting unit and allows dimensionally accurate positioning

2 functions

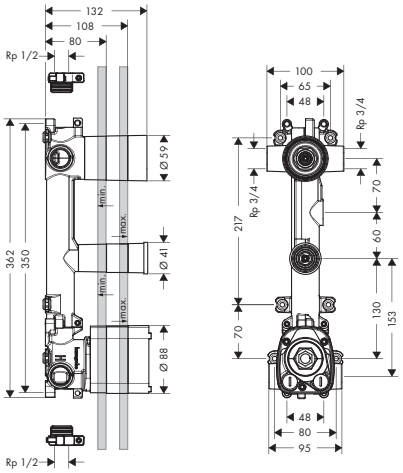

3 functions

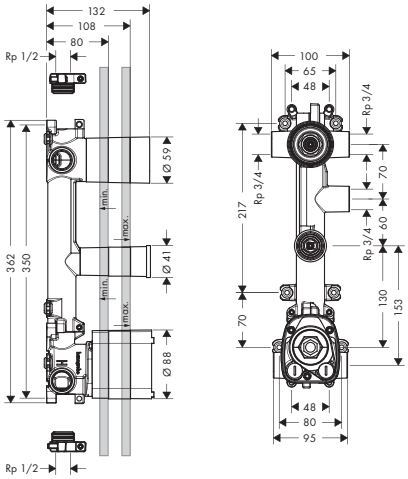

Certificates/declarations

EPD

Overview variants

Number of functions	Code no.
2 functions	36701180
3 functions	36708180

Basic set for shut-off valve 120/120 for concealed installation

Features

/ suitable for all shut-off valves finish sets
/ connection from left or right
/ connection dimension: DN15
/ flow rate at free through-flow: 55 l/min
/ sound-decoupled installation
/ in a joined installation it serves as a waterconducting unit and allows dimensionally accurate positioning

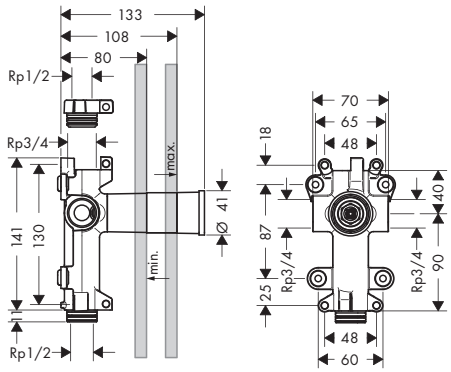

LVI-nro	Code no.
6350099	10971180

Measurements within scale drawings are in mm.
Technical specifications and units of measure are subject to change.

Basic set for shut-off/ diverter valve Trio 120/120 for concealed installation

Features

/ 2 functions
/ 1 inlet/ 2 outlets
/ 2 outlets can be used simultaneously
/ connection thread Rp ¾
/ connection dimension: DN20
/ horizontal or vertical installation
/ sound-decoupled installation
/ in a joined installation it serves as a waterconducting unit and allows dimensionally accurate positioning

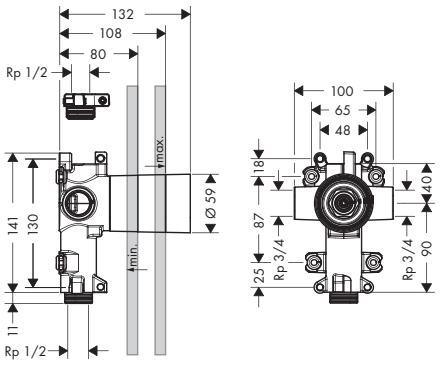

LVI-nro	Code no.
6454176	36770180

Basic set for hand shower module 120/120 for concealed installation

Features

/ connection dimension: DN15
/ flow rate at free through-flow: 30 l/min
/ ceramic valve 180°
/ horizontal or vertical installation
/ sound-decoupled installation
/ in a joined installation it serves as a waterconducting unit and allows dimensionally accurate positioning

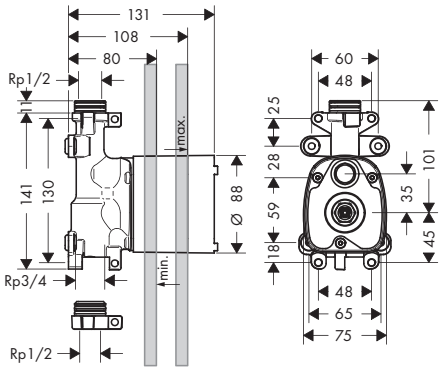

LVI-nro	Code no.
6555627	10650180

Base set for finish sets for standard installation

Features

/ consists of: base set, siphon, pre-assembled sealing membrane, height adjustment boards, screed protection cover
/ where to use: new construction, renovation
/ water seal: 50 mm
/ minimum construction height: 75 mm
/ drainage capacity with siphon: up to 33 l/min
/ drainage capacity with Dryphon: up to 55 l/min
/ connection diameter: DN50
/ direction of outlet: horizontal
/ connection: 3-sided
/ easy fixation to the floor with mounting bracket
/ height adjustable with the foam boards
/ mounting type: wall-mounted, free in the floor
/ easy to clean siphon
/ removable siphon
/ suitable for soundproof mounting

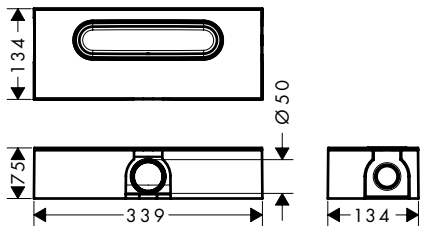

Technologies

Easy Clean Siphon

Installation

Water Damage Protection

Code no.
01005180

*AXOR FinishPlus: For further AXOR FinishPlus surfaces please see the AXOR FinishPlus overview on page 27.

Base set for finish sets for flat installation

Features

/ consists of: base set, siphon, pre-assembled sealing membrane, height adjustment boards, screed protection cover
/ where to use: new construction, renovation
/ water seal: 30 mm
/ minimum construction height: 57 mm
/ drainage capacity with siphon: up to 25 l/min
/ drainage capacity with Dryphon: up to 37 l/min
/ connection diameter: DN40
/ direction of outlet: horizontal
/ connection: 3-sided
/ easy fixation to the floor with mounting bracket
/ height adjustable with the foam boards
/ mounting type: wall-mounted, free in the floor
/ easy to clean siphon
/ removable siphon
/ suitable for soundproof mounting

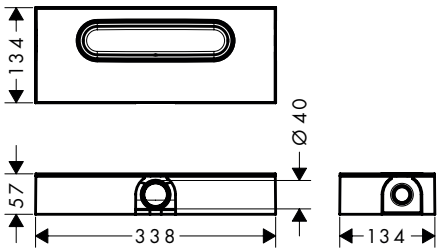

Technologies

Easy Clean Siphon

Installation

Water Damage Protection

Code no.
01006180

Base set for finish sets for vertical installation

Features

/ consists of: base set, siphon, pre-assembled sealing membrane, screed protection cover
/ where to use: new construction, renovation
/ water seal: 50 mm
/ minimum construction height: 75 mm
/ drainage capacity with siphon: up to 33 l/min
/ drainage capacity with Dryphon: up to 55 l/min
/ connection diameter: DN50
/ direction of outlet: vertical
/ connection: 1-sided
/ mounting type: wall-mounted, free in the floor
/ easy to clean siphon
/ removable siphon

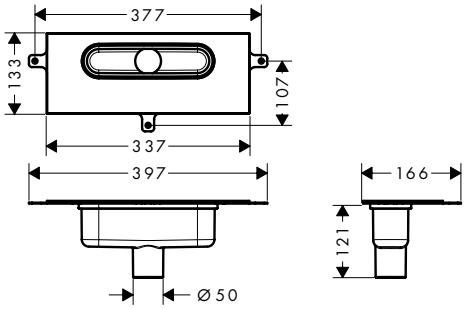

Technologies

Easy Clean Siphon

Installation

Water Damage Protection

Code no.
01007180

Basic set for ShowerHeaven 1200/300 4jet with light module

Features

/ sound-decoupled installation
/ minimum mounting depth: 75 mm
/ maximum mounting depth: 155 mm
/ connection dimension: Rp ½

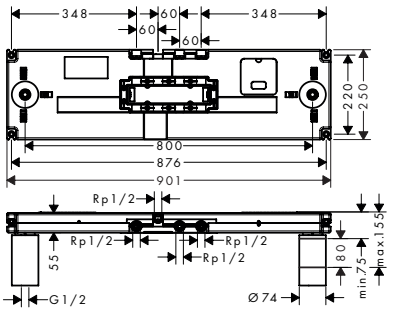

Available from	Code no.
Q2/2024	12922180

Measurements within scale drawings are in mm.
Technical specifications and units of measure are subject to change.

Extension set 230 mm for ceiling connector ShowerHeaven 1200/300 4jet

Features

/ packaging unit: 2 pieces
/ dimension: 230 mm

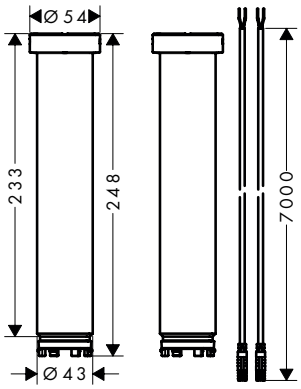

Finish	Code no.
Chrome	13603000
AXOR FinishPlus*	13603XXX

Basic set for overhead shower with shower arm

Features

/ includes polystyrene sheathing as a placeholder during installation
/ sound-decoupled installation
/ connection dimension: Rp ½

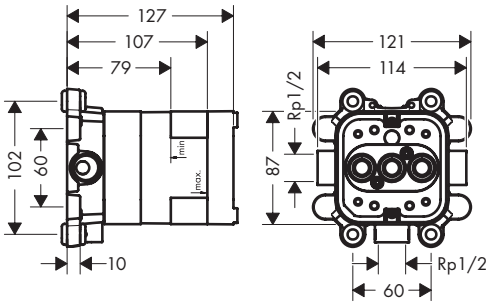

Code no.
35361180

Basic set for overhead shower 240/240 1jet with shower arm

Features

/ for installation in a direct line with no.40872000, no.40873000 the mounting plate no.10973180 is necessary
/ sound-decoupled installation
/ minimum mounting depth: 61 mm
/ maximum mounting depth: 108 mm

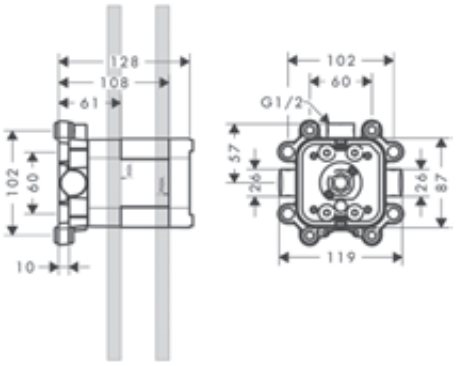

Code no.
10921180

*AXOR FinishPlus: For further AXOR FinishPlus surfaces please see the AXOR FinishPlus overview on page 27.

Basic set for LampShower 275 1jet with shower arm and overhead shower 240 2jet with shower arm

Features

/ the basic set is required in case of insufficient quality and stability of the wall structure
/ sound-decoupled installation
/ TÜV certified
/ connection for power supply by empty tube
/ connection dimension: Rp ½

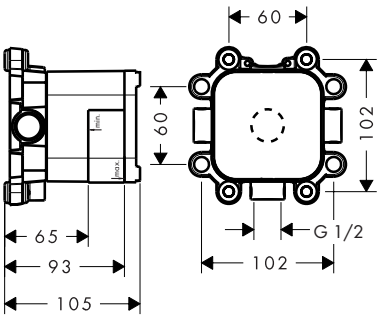

Code no.
26909180

Basic set for overhead shower ceiling

Features

/ ServiceCard with sieve and flow restrictor can be removed without tools for cleaning porpose
/ ceiling installation
/ minimum mounting depth: 60 mm
/ maximum mounting depth: 80 mm
/ connection dimension: Rp ½

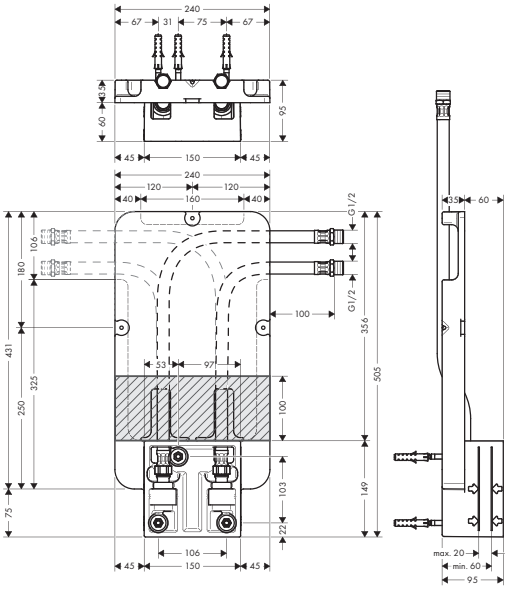

Certificates/declarations

EPD

Code no.
35363180

Basic set for overhead shower with ceiling connector

Features

/ ceiling installation
/ includes polystyrene sheathing as a placeholder during installation
/ minimum mounting depth: 50 mm
/ maximum mounting depth: 125 mm
/ connection dimension: Rp ½

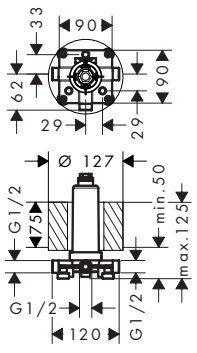

Certificates/declarations

EPD

Code no.
26434180

Measurements within scale drawings are in mm.
Technical specifications and units of measure are subject to change.

Extension 230 mm for ceiling connector overhead shower

Features

/ packaging unit: 1 piece
/ dimension: 230 mm

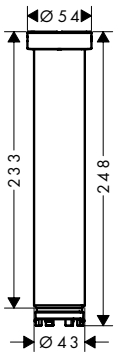

Finish	Code no.
Chrome	35288000
AXOR FinishPlus*	35288XXX

Basic set for shower module 120/120 for concealed installation

Features

/ in a joined installation it serves as a waterconducting unit, allows dimensionally accurate positioning
/ connection right or left
/ sound-decoupled installation

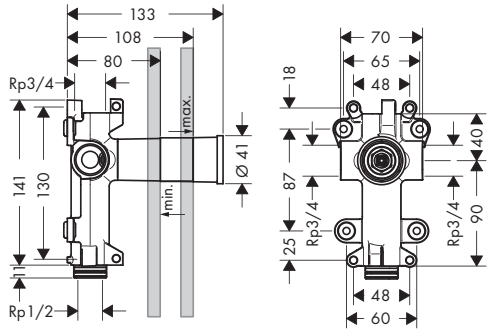

LVI-nro	Code no.
6559016	28486180

Basic set for flood spout 240/120 for concealed installation

Features

/ connection dimension: DN20
/ in a joined installation it serves as a waterconducting unit and allows dimensionally accurate positioning

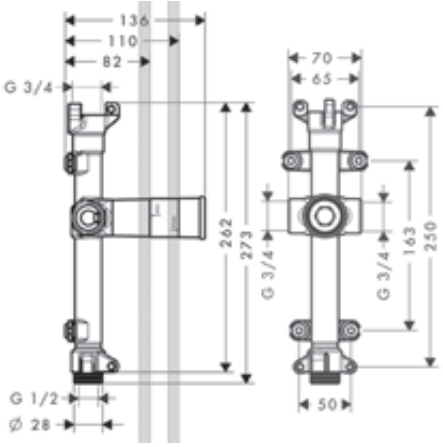

Code no.
10941180

*AXOR FinishPlus: For further AXOR FinishPlus surfaces please see the AXOR FinishPlus overview on page 27.

Basic set/ waterconducting unit for shelf 240/120 for concealed installation

Features

/ in a joined installation it serves as a waterconducting unit, allows dimensionally accurate positioning. In combination with: # 40873XXX

LVI-nro	Code no.
5773838	40878180

Basic set/ waterconducting unit for shelf 120/120 for concealed installation

Features

/ in a joined installation it serves as a waterconducting unit, allows dimensionally accurate positioning. In combination with: no.40872000

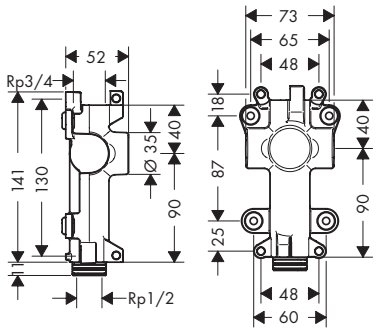

LVI-nro	Code no.
5773837	40877180

Basic set for shower panel

Features

/ wall-mounted
/ vertical installation
/ minimum mounting depth: 106 mm
/ maximum mounting depth: 134 mm

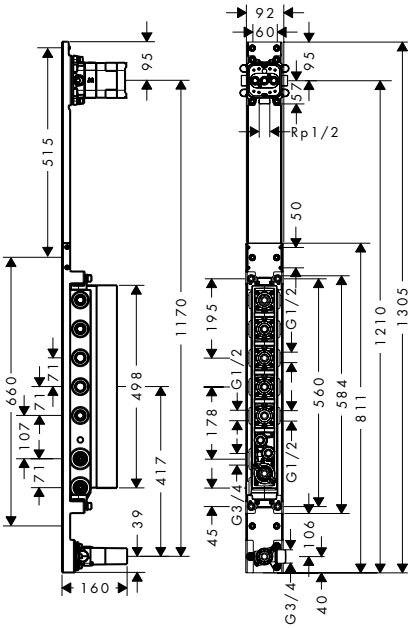

Code no.
12676180

Measurements within scale drawings are in mm.
Technical specifications and units of measure are subject to change.

Basic set for Showerpipe

Features

/ suitable for AXOR One Showerpipe 48790XXX
/ connection dimension: G ½
/ sound-decoupled installation
/ minimum mounting depth: 46 mm
/ maximum mounting depth: 74 mm

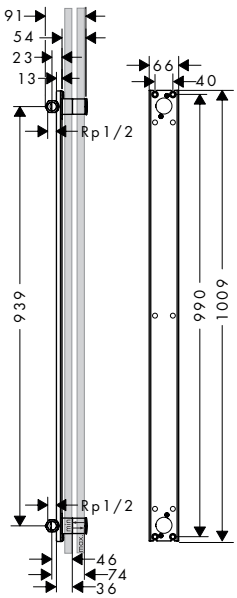

Code no.
48798180

Hose extension set for 2-hole basin mixer

Features

/ length of hoses 700 mm
/ for free positioning of spout and handle

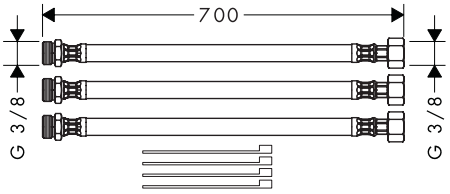

Code no.
38960000

Hose extension set for 3-hole basin mixer

Features

/ length of hoses 700 mm
/ for free positioning of spout and handles

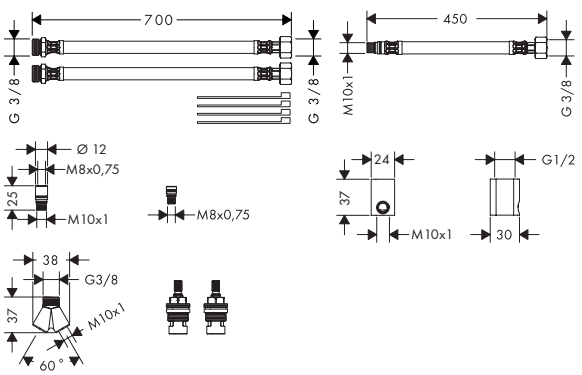

Code no.
38959000

*AXOR FinishPlus: For further AXOR FinishPlus surfaces please see the AXOR FinishPlus overview on page 27.

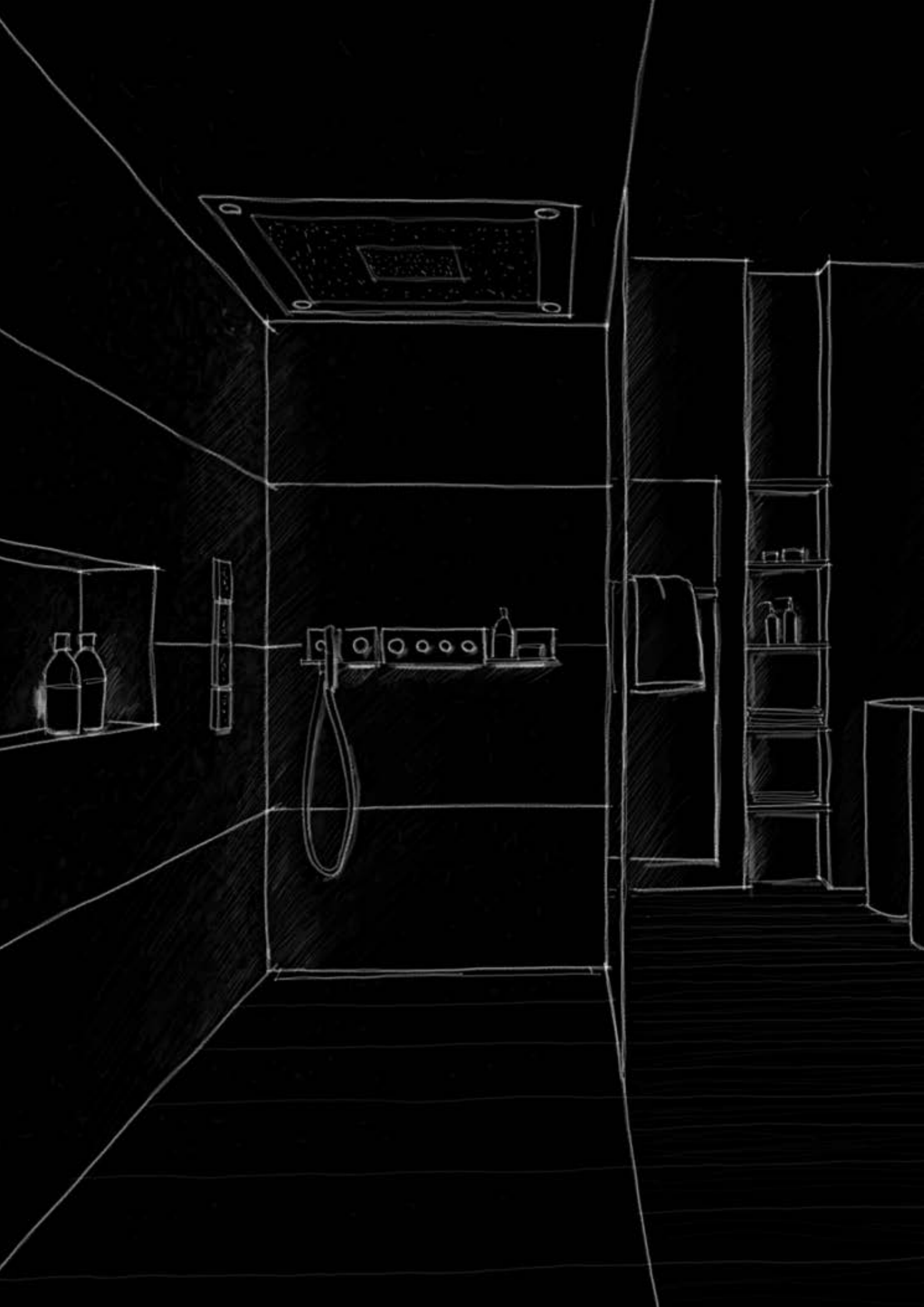

Planning and Installation

Planned down to the last detail

That AXOR continues to set new benchmarks in form and function is made clear with product innovations that are both visual statements and easy to use. AXOR follows this principle even behind walls, with installation options that are thoroughly planned down to the last detail. They are easy to carry out, thanks to iBox universal or specially developed basic sets and thanks to the self-explanatory assembly instructions that come with every AXOR product.

SIX EXAMPLES FOR PLANNING AND INSTALLATION:

- AXOR ShowerCollection: the flexible building block system for creative shower planning
- AXOR thermostatic module Select: a luxurious way to control the shower preferences of up to five functions
- AXOR ShowerComposition: an architectonic composition presenting novel possibilities for individual expression
- AXOR thermostatic module Select: simple installation for up to three functions
- AXOR One thermostatic module: great user comfort thanks to intuitive paddle operation
- AXOR iBox universal: the multi-talented technology for easy concealed installation

Planning example
AXOR ShowerCollection with AXOR ShowerHeaven 970/970 3jet, with lighting:

The AXOR ShowerCollection is a flexible, building block system for creative shower planning. The corner installation offers a shower experience that surrounds you completely, above all, with the three different AXOR ShowerHeaven spray modes. Two shower modules are used as body showers. Centralized control of all shower elements is realized in the AXOR thermostatic module. The elements can be used individually or together.

- / All three spray modes of the ShowerHeaven 970/970 3jet can be easily controlled with the thermostatic module 360/120
- / All of the showers can be operated outside of the wet zone
- / Water temperature can be set as desired before showering
- / The hand shower module can be operated easily from the shower entry area, making it ideal for cleaning the shower

Products

ShowerHeaven 970/970 3jet with lighting
10623800
Thermostatic module 360/120
for concealed installation square for 3 functions
10751000
Basic set
10750180
Shut-off valve 120/120
for concealed installation square
10972000
Basic set
10971180
Hand shower module 120/120
for concealed installation square
10651000
Basic set
10650180
2x Shower module 120/120
for concealed installation square
28491000
Shelf 240/120
40873000
Basic set
40878180

Flow diagrams

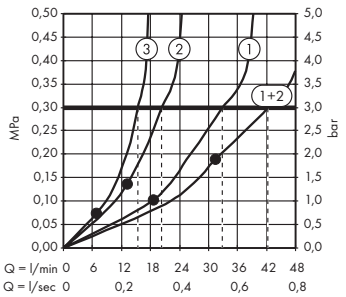

ShowerHeaven 970/970 3jet
with lighting
10623800

① Rain
② RainAir
③ Mono

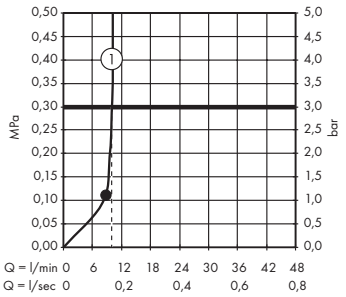

Shower module 120/120
for concealed installation square
28491000

① Rain

Function guaranteed starting at •. Consumption data is measured in practical use with the respective mixer/valve for concealed installation.

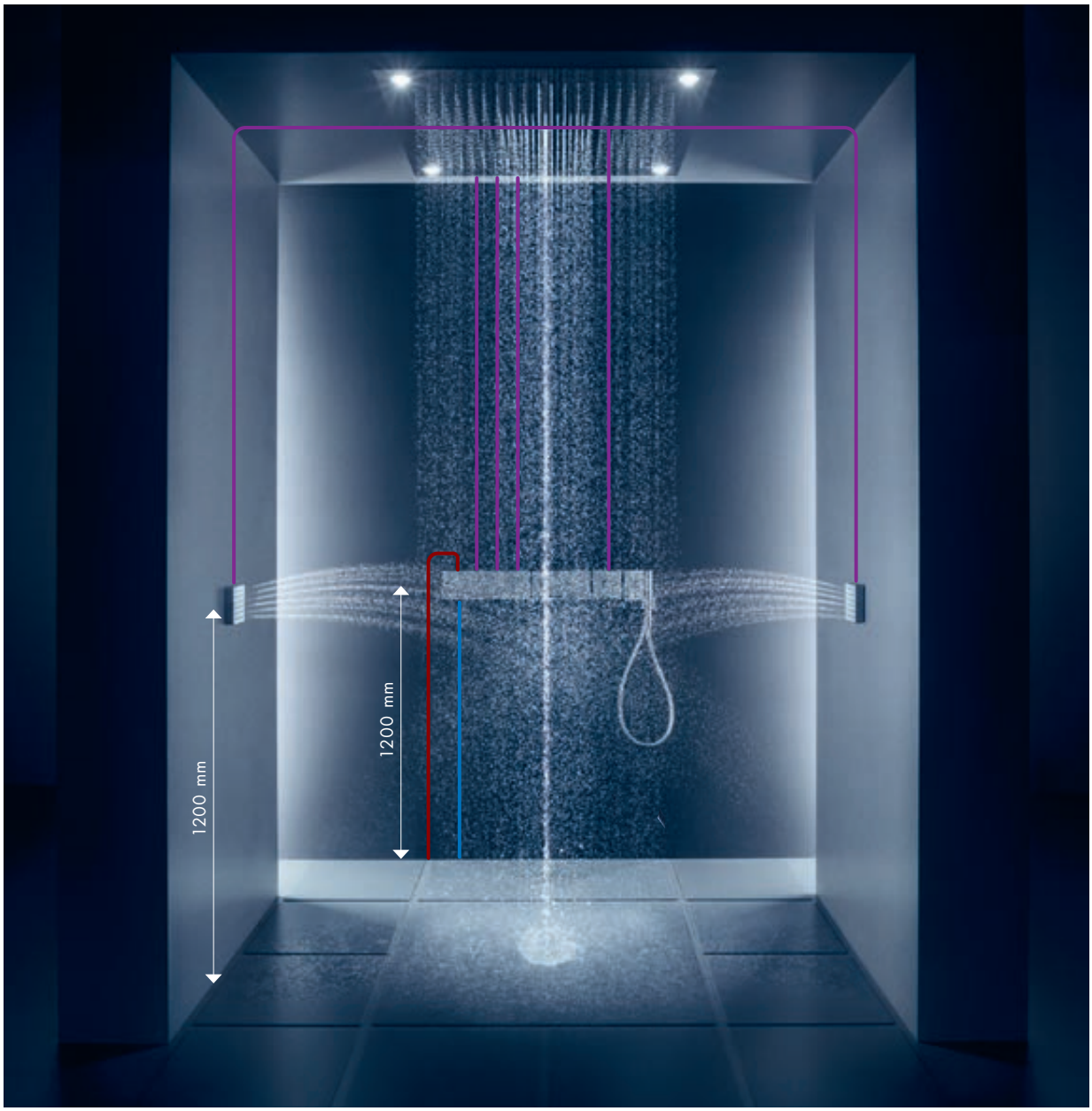

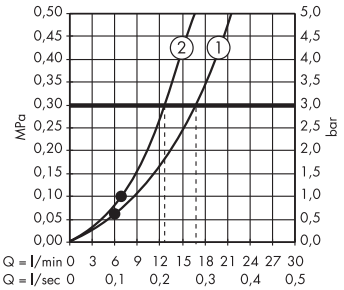

Hand shower module 120/120
for concealed installation square
10651000

① Rain
② RainAir

Dimension drawings

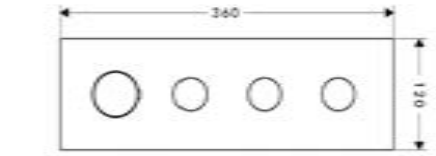

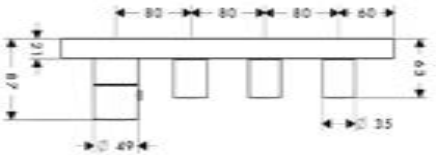

Thermostatic
module 360/120
for concealed installation
square for 3 functions

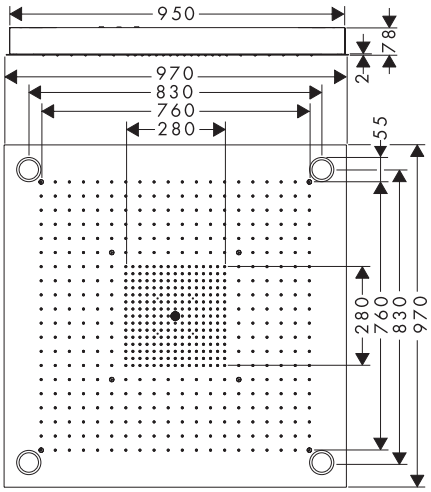

ShowerHeaven 970/970 3jet with lighting

Planning example
AXOR Select concealed installation 670/90 thermostat module for 5 consumers with AXOR ShowerHeaven 1200/300 4jet, with 3,500 K lighting:

Luxurious operation. The thermostatic module Select has a minimalistic look and is the central element for controlling all spray modes and functions individually or in combination. Safe, secure and easy installation with the basic set. A perfect combination partner for AXOR ShowerHeaven 1200/300 4jet.

- / It's easy to control all four spray modes of the AXOR ShowerHeaven 1200/300 4jet with the thermostatic module Select 670/90
- / All of the important functions are brought together in one elegant, concealed thermostat: user control, temperature regulation and water flow.
- / The large Select buttons for controlling the spray modes and functions offer easy, intuitive operation
- / The hand shower is added to the thermostatic module via a porter with an integrated hose connection

Products

ShowerHeaven 1200/300 4jet with lighting 3500 K
10628000
Basic set
10922180
Thermostatic module Select 670/90
for concealed installation for 5 functions
18358000
Basic set
18313180
Baton hand shower 2jet
28532000
Metal effect shower hose 1.25 m
28282000

Flow diagrams

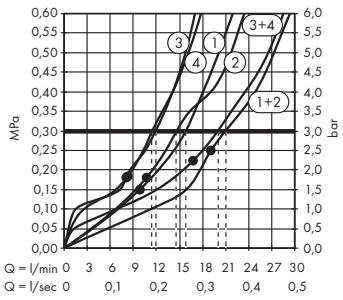

ShowerHeaven 1200/300 4jet
with lighting 2700 K
10628000

① Rain
② Mono
③ PowderRain, inside
④ PowderRain, outside

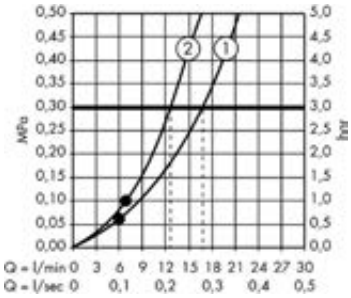

Baton hand shower 2jet
28532000

① Rain
② Mono

Function guaranteed starting at •. Consumption data is measured in practical use with the respective mixer/valve for concealed installation.

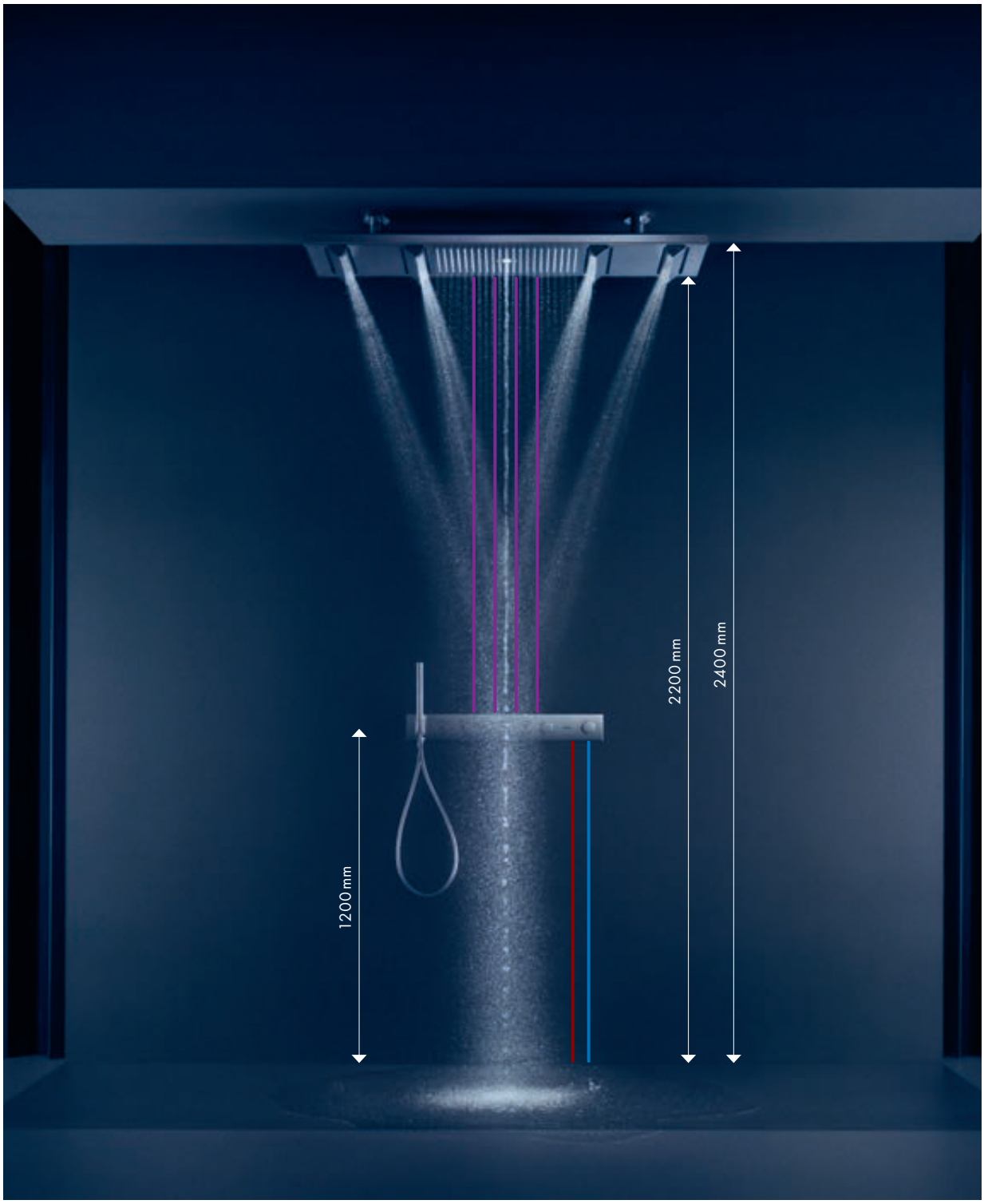

Dimension drawings

ShowerHeaven 1200 / 300 4jet with lighting 3500 K

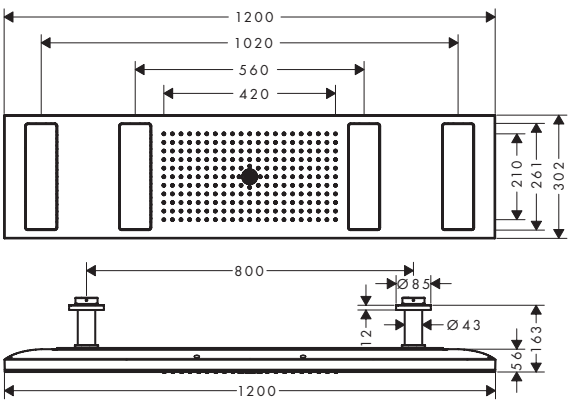

Thermostatic module Select 670 / 90 for concealed installation for 5 functions

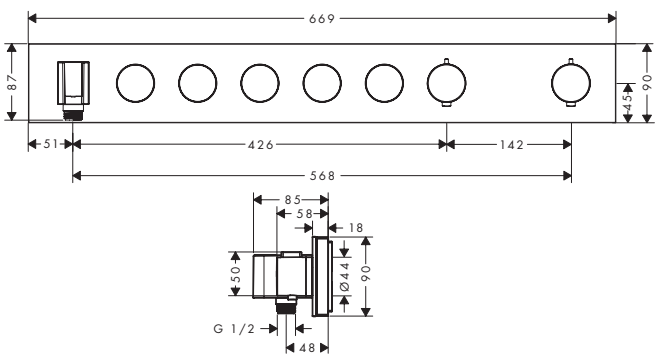

Planning example
AXOR ShowerComposition thermostatic module 610/110 for concealed installation for 4 functions with AXOR ShowerComposition shower module 110/220 1jet with shoulder shower and AXOR MyEdition bath spout

The composition of a shower module 1jet with integrated shoulder shower, a thermostatic module 610/110 for concealed installation for 4 functions with integrated baton hand shower and a separate bath spout enables a sophisticated solution for showering and bathing at the same time. For installation, one basic set is required for the shower module and one for the thermostatic module.

- / The overhead shower of the shower module incorporates a conical PowderRain spray
- / Temperature and water volume are controlled separately through an intuitive interaction design
- / Intuitive Select technology: it's easy to switch the overhead, shoulder and hand showers and bath spout on and off with the Select switches

Products

Shower module 110/220 1jet with shoulder shower
12593300
Basic set
35361180
Thermostatic module 610/110 for concealed installation for 4 functions
12573300
Basic set
18312180
Bath spout
47412300
Cover plate Black Walnut
47906000

Flow diagrams

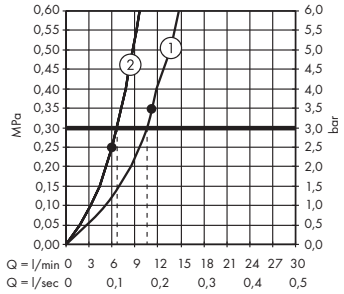

Shower module 110/220 1jet with shoulder shower
12593300
① PowderRain
② PowderRain

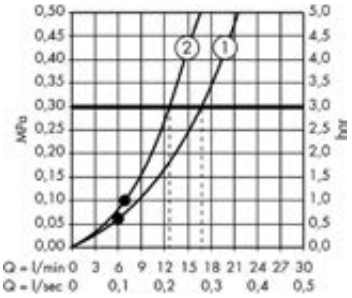

Baton hand shower 2jet
28532000
① Rain
② Mono

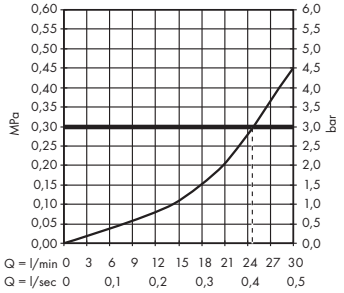

Bath spout
47412300

Function guaranteed starting at •. Consumption data is measured in practical use with the respective mixer/valve for concealed installation.

Dimension drawings

Shower module 110/220 1jet
with shoulder shower

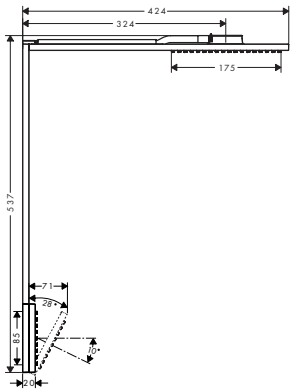

Thermostatic module 610/110 for
concealed installation for 4 functions

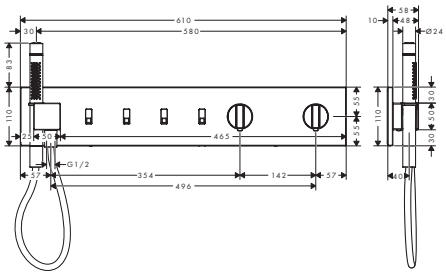

Bath spout

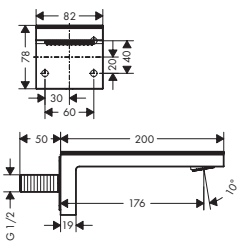

Planning example
AXOR thermostatic module Select for 3 functions with AXOR overhead shower 300/300 2jet with shower arm:

Clean design for the shower thanks to the slim form of the AXOR thermostatic module Select. Combined with the AXOR overhead shower 300/300 2jet, the innovative PowderRain and Intense PowderRain spray modes provide a highly sophisticated shower experience. The thermostat module with Select technology is used to control the spray modes. It's easy with the intuitive operation of the Select buttons. The special basic set makes it easy to install the thermostat module.

- / Central control with a thermostat: Select buttons for the spray modes, rotary knobs to regulate temperature and water flow
- / Easy to operate thanks to Select technology

Products

Overhead shower 300/300 2jet with shower arm
35318000
Basic set 2jet
35361180
Thermostatic module Select 530/90
for concealed installation for 3 functions
18356000
Basic set
18311180
Baton hand shower 2jet
28532000
Metal effect shower hose 1.25 m
28282000

Flow diagrams

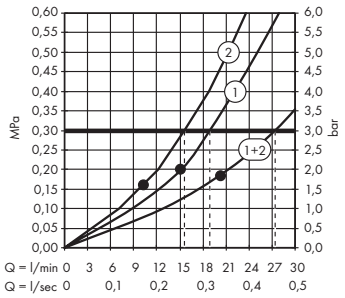

Overhead shower 300/300 2jet with shower arm
35318000

① PowderRain
② Intense PowderRain

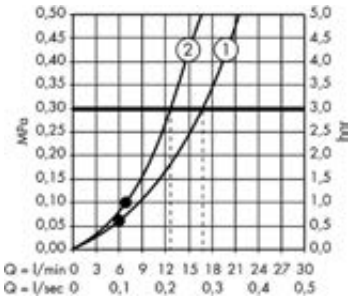

Baton hand shower 2jet
28532000

① Rain
② Mono

Function guaranteed starting at •. Consumption data is measured in practical use with the respective mixer/valve for concealed installation.

Dimension drawings

Overhead shower 300/300 2jet with shower arm

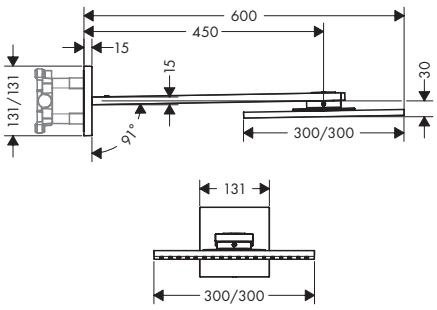

Thermostatic module Select 530/90 for concealed installation for 3 functions

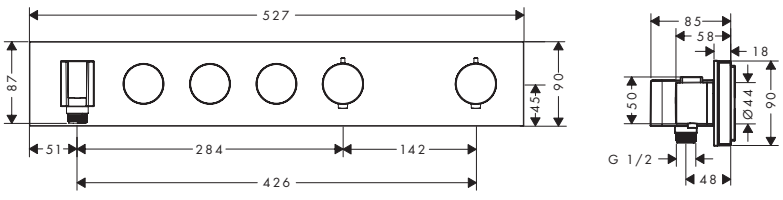

The checklist:
We've thought of everything.

Be perfectly prepared as you start your planning and consultation conversation with your customer. The checklist helps you to address all of the important points. From room design to the water experience, water consumption and accessories to installation and technology.

1 Bathroom Design

/ Bathroom type ☐ New construction ☐ Renovation

/ Bathroom size _____

/ Style ☐ Avant-garde ☐ Modern ☐ Classic

/ Material(s) used in the bathroom _____

/ Color concept for the bathroom _____

/ Shower size _____

2 Shower planning

/ Shower form ☐ Tiled ☐ Shower tray

/ Drain ☐ Channel ☐ Trap

/ What is the ratio of tile to joint compound if walls are tiled? _____

/ Are the protected zones for electronic installations taken into account? ☐ Yes ☐ No

/ Is ceiling height sufficient? ☐ Yes ☐ No
(e.g., for overhead showers, shower pipes)

/ Placement of towel rack within reach? ☐ Yes ☐ No

/ Accessories necessary in the shower? ☐ Yes ☐ No

/ If yes: Which products?

☐ Shelves
(e.g., for shampoo and shower gel)
☐ Towel rack
_____

3 Water and control comfort

/ Is a shower pipe / shower column desired and can it be used? ☐ Yes ☐ No

/ Is an overhead shower desired and can it be used? ☐ Yes ☐ No

/ If yes: Which type of installation is desired for the overhead shower?

☐ Ceiling connection
☐ Wall connection
☐ Integrated in the ceiling

/ Which form of overhead shower is desired?

☐ Round ☐ Angular
☐ Softsquare

/ How many spray modes are desired with the overhead shower? ☐ 1 ☐ 2 ☐ 3 ☐ 4

/ Which spray modes are desired with the overhead shower?

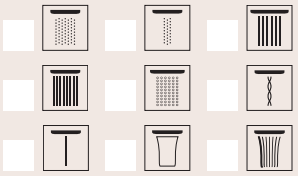

/ Is a hand shower desired? ☐ Yes ☐ No

/ If yes: How should the hand shower be attached?

☐ Wall rod with integrated shower holder
☐ Single shower holder
☐ Porter unit

/ How many spray modes are desired with the hand shower? ☐ 1 ☐ 2 ☐ 3

/ Is saving water important?
If yes: Use EcoSmart products.

☐ Yes ☐ No

/ Which type of installation is desired for the control element?
(e.g., thermostats, shut-off valves)

☐ Exposed
☐ Concealed
☐ Exposed/concealed

/ Which control concept is desired?

☐ By pressing Select buttons
☐ By rotating

/ Should it be possible to reach mixer/set water conditions without getting in contact with water?

☐ Yes ☐ No

4 Product modification

/ Is an AXOR FinishPlus surface desired for the products?

☐ Yes ☐ No

/ If yes: Which surface finish is desired?

_____

/ Are customized product modifications by AXOR Signature service required or desired?

☐ Yes ☐ No

☐ Personalized inscriptions
☐ Length modifications for products
(e.g., shortening/lengthening)
☐ Handle modifications
☐ Integration of structures
☐ Use of special materials such as wood or marble

/ Other requests or ideas:

_____
_____
_____
_____

5 Installation Planning

/ Is the required water pressure sufficient for the planned users? ☐ Yes ☐ No

/ Are the pipes the right size(s)? (inflow / outflow) ☐ Yes ☐ No

/ Is enough hot water available for the product? ☐ Yes ☐ No

/ Are the products suitable for use with a flow heater? ☐ Yes ☐ No

/ Can the handles be retrofitted? (Sturdy substructure?) ☐ Yes ☐ No

6 Notes

Inspiration

At home in luxurious bathrooms all over the world.

In demand worldwide, AXOR faucets and showers can be found in the most prestigious hotels and restaurants and most luxurious apartments, houses and villas. What unites these places is the exceedingly high standard they set for design, quality, customization and sustainability.

Villa Copenhagen, Copenhagen, Denmark

Contemporary Luxury in the Danish Capital

»AXOR WERE REALLY OPEN TO APPROACHING THIS ALMOST UNREALIZABLE THING WITH BOTH CARE AND ATTENTIVENESS. I HAVE EXTREMELY GOOD MEMORIES ABOUT THE WHOLE PROCESS OF WORKING WITH AXOR.«

Olga Krukovskaya, Architect, Shamballa Jewels

As guests pass through the Neo-Baroque façade of Villa Copenhagen, they enter a world of conscious, contemporary luxury with an ambiance all its own. Villa Copenhagen features the AXOR Montreux collection within 381 of the hotel's guest rooms and suites, designed by London-based practice Universal Design Studio. The presence of bespoke AXOR Montreux basin and bathtub faucets in the hotel's eight Shamballa suites which were designed by the luxury brand of the same name deserves special mention.

In the bathrooms, the Shamballa team worked closely with AXOR Signature, the customization service of AXOR, to create bejeweled handles—cast as double thunderbolts, the symbol of Shamballa—for the faucets. . The handles are inlaid with ruby and sapphire to represent hot and cold water, they express perfectly the AXOR commitment to individualization and personal luxury.

Architects: Universal Design Studios
Collection: AXOR Montreux
Surface: Brushed Black Chrome
AXOR Signature Service: New Product Development

Laurichhof, Pirna / Germany

A runway for individuality

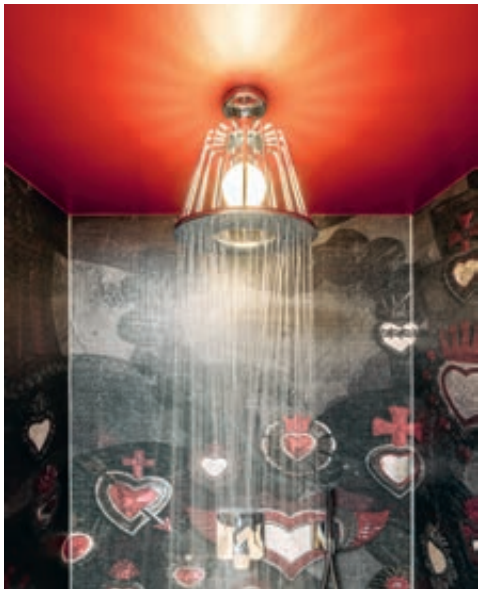

At the gateway to Saxon Switzerland and close to the Elbe metropolis of Dresden, the Laurichhof invites you to a one-of-a-kind stay. On a fallow family plot, Annette Katrin Seidel, together with her son Franz Philip Seidel, made her long-cherished dream project a reality that expresses her more than thirty years of experience as an interior designer and architect. The result is the Designhotel Laurichhof with 27 individually furnished suites that invite you to see and experience, to wonder and admire, to relax and recover. The bathrooms play an elementary role in this. The spacious rooms reflect the design idea of the suites through the choice of materials, color scheme and, last but not least, the selection of different AXOR faucets and showers.

"WHAT MAKES AXOR SUCH A GOOD FIT FOR THE LAURICHHOF IS THE BRAND'S HIGHLY VERSATILE COLLECTIONS, WHICH GAVE US MAXIMUM DESIGN FREEDOM. WE WERE ABLE TO CHOOSE THE FAUCETS TO PERFECTLY MATCH THE INDIVIDUAL SUITE CONCEPTS."

Annette Katrin Seidel, interior architect, designer, and owner of the Designhotel Laurichhof

Architect: Seidel+Architekten
Collections: AXOR Citterio, AXOR Citterio M, AXOR Urquiola, AXOR Starck, AXOR Starck Organic, AXOR Montreux, AXOR Massaud
Surfaces: Chrome, Brushed Nickel

Arte Surfside, Miami / USA

Nuanced execution of compact luxury

Designed by Antonio Citterio Patricia Viel's multidisciplinary architecture and interior design practice, Arte Surfside's sculptural, 11-story residential complex with direct access to the beach embodies a key principle of compact luxury: it provides communal amenities that enhance the resident experience while creating private living space. The residential units, meanwhile, reflect another aspect of compact luxury, which Citterio describes as "the need for personalized, private spaces that make creative use of their dimensions."

Antonio Citterio worked exclusively with AXOR products in the Arte Surfside. In the bathrooms, he chose AXOR Citterio E faucets, a collection distinguished by the elegance with which it balances opposites.

"DESIGNERS' EFFORTS SHOULD BE DIRECTED TOWARD MINIMIZING THE EFFECT OF CORRIDORS AND CIRCULATION AREAS, TO PERCEIVING THE SPACE AS IF IT WERE AS WIDE AS POSSIBLE. AND THEN TOWARD ADDING DETAILS, LIKE THE ONES WE'RE WORKING ON WITH AXOR IN THE BATHROOM, THAT GIVE A GREAT SENSE OF QUALITY."

Antonio Citterio

Architect: Antonio Citterio
Collections: AXOR Citterio, AXOR Citterio E, AXOR Starck, AXOR Universal
Surface: Brushed Bronze

The AUDO, Copenhagen / Denmark

A hybrid space for hospitality and encounters

In Nordhavn, Copenhagen's old industrial harbor, new life has been breathed into a neo-baroque building from the early 20th century. The Audo celebrates and hosts human encounters in the global, digital age. Bjarne Hansen, founder of Danish design firm MENU, and Jonas Bjerre-Poulsen, co-founder of Norm Architects, conceived The Audo as a hybrid space, a platform for bringing local and international creatives together. International visitors, however, will appreciate it first and foremost as a one-of-a-kind hotel. Through the choice of materials and colors, each room evokes a different mood. AXOR Uno harmonizes with all of them – whether in Brushed Black Chrome for a "lunar" ambiance or in Brushed Bronze for a "deep forest" atmosphere. Other finishes include Brushed Brass and Stainless Steel Optic.

"WE WERE THRILLED WITH ALL THE WONDERFUL FINISHES AXOR HAD TO OFFER. WE WANTED A DIFFERENT MATERIAL AND COLOR PALETTE FOR EACH FLOOR AND ROOM."

Jonas Bjerre-Poulsen, co-founder of Norm Architects

Architects: Norm Architects
Collections: AXOR Uno, AXOR Showers, AXOR Citterio
Surfaces: Brushed Black Chrome, Brushed Bronze, Brushed Brass, Stainless Steel Optic

Rosewood São Paulo

A reinvented historic hospital welcomes new life

A newcomer to São Paulo's luxury hotel scene, Rosewood São Paulo has already become one of the city's most exciting destinations. For the hotel's interiors, celebrated visionary Philippe Starck collaborated with a group of 57 Brazilian artists and artisans, who were commissioned by the Rosewood Group to approach the property as a once-in-a-lifetime art project. The 160 guest rooms and purchasable suites feature AXOR Starck in Brushed Bronze. In keeping with the collection's finish, Starck has developed an elegant palette for the Rosewood São Paulo bathrooms, creating an atmosphere of calm and comfort in which guests can truly relax.

»INSPIRED BY THE PRIMITIVE HAND PUMP, AXOR STARCK IS PERFECTLY IN KEEPING WITH THE HOTEL'S AESTHETIC PRINCIPLE OF BALANCING PAST AND FUTURE.«

Architect: Jean Nouvel
Design direction: Philippe Starck
Collection: AXOR Starck
Surface: Brushed Bronze

Private apartment, Prague / Czech Republic

Modern luxury in a discreet location

The "Golden House" – as it is also called – is located in the 6th district of Prague and offers modern luxury in a discreet location. Designer Ivanka Kowalski created an intimate yet opulent atmosphere by delicately combining different materials. The highlights of this property are the private spa and en suite bathrooms. These spaces are adorned by various AXOR collections, each of which makes a unique contribution to the overall aesthetic. For the bathroom products from the AXOR Urquiola and AXOR One collections, Kowalski chose Brushed Gold Optic, Polished Gold Optic, and Brushed Bronze from the wide range of exclusive AXOR FinishPlus surfaces. At the sinks, AXOR Urquiola faucets and their artfully eclectic combination of shapes create a lively contrast to traditional wood and stone. The floor-standing thermostat becomes an extravagant, sensuous statement at the bath tub.

Interior architect: Ivanka Kowalski
Collections: AXOR Urquiola, AXOR One, AXOR Showers, AXOR Starck
Surfaces: Brushed Gold Optic, Polished Gold Optic, Brushed Bronze

"WITH ITS AVANTGARDE DESIGNS AND AN UNPARALLELED RANGE OF EXCLUSIVE FINISHES, THE AXOR BRAND HAS BECOME THE PERFECT PARTNER FOR THE BATHROOM AND KITCHEN."

Ivanka Kowalski, interior designer

The Alchemist, Copenhagen / Denmark

A journey that touches all the senses

An evening at The Alchemist is sure to be a memorable one. Since opening in 2019, the Copenhagen restaurant has earned two Michelin stars for its highly creative, technically complex dishes and choreographed dining experiences. Head chef and co-owner Rasmus Munk worked with Studio Duncalf to reinvent the space – a former Royal Danish Theatre workshop for stage construction – by employing live performers and using visual technologies for Munk's self-designed "holistic cuisine." The Alchemist takes guests on a journey that touches all the senses – through neon halls, past walls spray-painted with graffiti and a 42-foot-tall wine cellar. If the journey takes you to the bathrooms or kitchens, you will discover not just one, but three AXOR collections.

"IN THE ALCHEMIST, WE HAVE THE OPPORTUNITY TO TAKE OUR GUESTS OUT OF THEIR NORMAL WORLD AND TRANSPORT THEM TO A DIMENSION OUTSIDE OF TIME AND SPACE."

Rasmus Munk, head chef and co-owner

Interior architects: Studio Duncalf
Collections: AXOR Starck Organic, AXOR Citterio, AXOR MyEdition
Surfaces: Brushed Black Chrome

Sonne Seehotel, Eich/ Switzerland

A hotel steeped in history searches for new horizons

»WATER PLAYS A STARRING ROLE IN EACH OF THE SUITES, WHETHER AS A BATHTUB ON THE TERRACE, A PICTURESQUE VIEW OF THE LAKE, OR IN THE AXOR ONE COLLECTION IN THE BATHROOMS.«

Situated on a headland overlooking Lake Sempach in the heart of Switzerland, the Sonne Seehotel has been welcoming guests in a variety of constellations for 172 years. Following the owners' wishes to "extend the hotel's eponymous sun within the context of the universe," Swiss-based interior designer Ushi Tamborriello and her team created open interiors in close harmony with the hotel's history and surrounding lake, referencing the sun, moon, and stars. Guests can discover a sphere of luxury in each of the 16 new suites—a sense perfectly encapsulated by the sculptural AXOR One collection and AXOR Universal Accessories, finished in Brushed Bronze.

Architects: A6 Architekten AG, Atelier ushitamborriello
Collections: AXOR One,
AXOR Universal Circular Accessories
Surface: Brushed Bronze

Banyan Tree Anji, Huzhou / China

A meditation on luxury

THE ARCHITECTURE OF THE BANYAN TREE ANJI REFLECTS LOCAL CULTURAL FEATURES AND THE SURROUNDING LANDSCAPE. AXOR CITTERIO ADDS TO THIS THOUGHTFUL STYLE THROUGH ITS ELEGANT, ELEMENTAL SHAPES.

It is only an hour's drive from the teeming metropolis of Hangzhou, yet the Banyan Tree Anji is worlds away. Surrounded by bamboo forests, tranquil lakes and gentle valleys, this exclusive eco-resort exudes the calm and seclusion of a monastery—albeit a very luxurious one. The property includes a golf course, an equestrian club and a spa. With its unique blend of contemporary décor and Buddhist tradition, the Banyan Tree Anji offers visitors a holistic space in which to retreat from the hectic pace of daily life. No wonder the bathrooms feature products from the AXOR Citterio collection.

Project participants: Greentown
Collection: AXOR Citterio
Surface finish: Chrome

Chouchou Hotel, Paris /France

Cosmopolitan flare and modern refinement in the 'City of Light'

Named after a French term of endearment, the Chouchou Hotel presents a warm-hearted, vivid homage to Paris for guests and locals alike. Parisian-native interior architect Michael Malapert envisioned among others 63 rooms, and everywhere one finds delightful references to French craftsmanship, design and culture.

Amid the glowing atmosphere of metropolitan elegance, it should come as no surprise to find the AXOR ShowerHeaven and AXOR Citterio M collection in the hotel's bathrooms, encased in a resplendent Brushed Bronze finish. The reduced, slender forms of these two collections, and the understated presence help transform the Chouchou Hotel into a safe haven from the vibrant streets beyond.

Architect: Michael Malapert
Collections: AXOR Citterio M, AXOR Starck, AXOR ShowerHeaven
Surface: Brushed Bronze

AXOR FINISHPLUS SURFACES, FURTHER ELEVATES THE AXOR PRODUCTS, CREATING STRIKING ACCENTS AGAINST THE HOTEL'S CALMING PALETTE OF BLUE AND WHITE TONES.

PREFACE

Modern bathrooms are more than a simple summary of planning and installation of tabs, showers and matching piping systems. Today, the room – which was for a long time a purely functional wet cell and neglected in terms of design – became a place of wellbeing, relaxation and regeneration. Besides the upgrade in both functional and product aspects, the bathroom developed over the last years more and more into a reflection of individual (composition) requests and (design) preferences. Along with this development, sales persons and planners are confronted with new demands. They need to advise discerning customers not only in terms of the right product choice but also in regards to the aesthetic impact of a bathroom.

This design lexicon serves both consultants and enthusiasts as a reference guide for design. However, it is not a claim to completeness – but as a competent basis for a professional dialogue it explains the different expressions in the areas of architecture, design and of the different AXOR collections.

ACCESSORIES

Borrowed from the French and used mostly in the plural, this collective term describes additional/decorative and/or functional equipment (from French "accessoires"). "Accessory" actually describes a not-necessary-but-adapted-to-the-fashion style, arrangement or image composition additional by-product. Accessories are used primarily in fashion design to set accents that are highly trend-dependent. In interior design, accessories such as textiles, decorative items, pictures, candles, vases and, in the bathroom, additional functional (soap) dishes, towels, mirrors or purely decorative design elements for the wall are used to achieve consistency of a design concept or look (compare: AXOR Accessories).

AESTHETICS/AESTHETIC

Aesthetics is the theory of the sensual perception (from Greek "aesthesis" = perception). Therefore, it doesn't mean beautiful by itself, but the doctrine of regularity and basics of the beautiful (harmony), as can be perceived in nature or art. Additionally, it analyzes whether the aesthetic features can be seen as objectively given or if beauty is in the eye of the beholder. This approach focuses less on personal taste than on the generally human or generally societal perception of what is considered as beautifully (compare: Golden Ratio). In everyday speech, the term is often used as a synonym for beautiful, balanced, tasteful, appealing. In the true sense of the word, however, "aesthetic" describes all the characteristics which we experience with our senses and which determine how we perceive our environment and objects – particularly whether we perceive them as beautiful or ugly. Balanced proportions, regular or layered forms and harmonious color combinations are often considered particularly aesthetic, beautiful and pleasant. How we perceive beauty may be partly rooted in biology, but it is also acquired culturally and sociologically (as defined by our personal environment). The same number of factors determine whether we perceive a design as being aesthetic or aesthetically convincing or not. In some cultures, clean and harmoniously proportioned shapes are considered beautiful while in other cultures however beauty means rich ornamentation.

AMBIENCE

The term ambience (from Latin "ambio" = surrounded or enclosed) means "surrounding environment" or "setting" in the sense of a special atmosphere exuded by a decór, a space or a piece of art. In interior design, ambience is achieved through a targeted aesthetic presentation and stands for the atmosphere created by a space.

ARCHETYPE

The term "archetype" comes originally from psychology or philosophy and – referring to psychologist C. G. Jung – indicates the primal image of being or original images, which are the compositions of (pre) human fundamental experiences and, all in all, represent the basis of the personality structure. An archetype (from Greek "arche" = beginning, and "typos" = imprint; meaning original model, mold) can be a shape that is embedded in our cultural memory and which is an example of or a symbol for a specific function. For many of us, a house still has a rectangular ground plan and a gabled roof, even though a variety of other house types exist today. Philippe Starck employed a bucket of water as an archetype. The water pump served him as an original

model for the faucets of the AXOR Starck Collection. In product design, archetypes are forms that establish or embody a new product class. For example, cross handles represent the handles of a faucet (compare: AXOR Montreux), the Porsche 911 represents the sports car, Mart Stam's "S34" steel-tube chair (1926) represents the cantilever chair, etc.

ARCHITECTURE / ARCHITECTONICS / ARCHITECTONIC

Architecture (from Greek "arché" = beginning, origin, base, the first, and "téchne" = art, handcraft) describes the crafted occupation and aesthetic examination of humans with the built space. Architecture is one of the oldest art forms of human civilization. Today, the lines between functional buildings and architecture are blurred: Department stores, concert halls, churches and apartments are regarded equally worthy of the design process. The connection between architecture and geometry is as old as architecture itself. The concept of architecture as both shell and constructive framework, and the idea of axiality (alignment with the axes), find their source in Roman antiquity. These principles have been continually refined and are today expressed through modern construction materials such as steel framing, concrete, glass etc. Space is designed in terms of dimension, proportion, form and composition. The term "architectural" covers anything that creates a space and cannot be dissociated from it – both in terms of construction and design. In product design, architectural composition is based mostly on geometric (basic) shapes. Straight, non-expressive, purist forms, without superfluous elements and avoiding all unnecessary technical-appearing style, is perceived as architectural. These objects appear as architectural, structural elements that are weight-bearing, functional and adjusted to the room. Such objects are often connected to the wall or the floor and / or provide structure to the room. They usually are not decorative but simply draw attention to the essentials (compare: AXOR Edge). The term "architectonics" is often used synonymously but can describe – to differentiate it from "architecture" – a structure, order or system. It may be used in regards to not only to the art of building but also to the human body or even to a poem.

ASYMMETRY / ASYMMETRIC

"Asymmetry" describes the missing of symmetry or an inequality. It is only used in those areas when there is also a symmetry (symmetry / symmetric). The adjective describes the non-symmetrical or unequally balanced elements in a composition. This manifests itself in an optical or even a structural imbalance in constructed objects or products. Some artists intentionally choose an asymmetric composition to create tension (compare: AXOR Urquiola). In deconstructionism, asymmetrical constructions are aimed at confusing the beholders' sense of balance and their perception of harmony by using technical illusions.

AUTHENTICITY / AUTHENTIC

"Authenticity" (from Greek "authentikós" = genuineness, reliability, credibility) means originality. An authentic object is always an original or a product identical to the original (as in serial production). In the figurative sense, a form or an attitude can be described as authentic (as opposed to cursory, superficial, ostensible) even though it might not characterize the original, as long as it carries its original quality and its true identity. Content can be considered as authentic when both aspects of perception – the instant semblance and the actual existence – are found to be in accordance. A form or a re-design is considered authentic when it is used or designed in the sense of the original (compare: AXOR Montreux).

AVANT-GARDE / AVANT-GARDIST

In the broadest sense, avant-garde (from French: "l'avant-garde" = front guard) assigns a leading or pioneering role. Avant-gardists are people who start new, pathbreaking developments. In contrast to a trendsetter, who starts only short-term styles, changes started by avant-gardists have a more basic and long-term effect. The term "avant-gardist" therefore doesn't describe one particular style, but rather an artistic or intellectual attitude. With respect to art history, the term "avant-garde" describes artists whose ideas and works are ahead of their time. In the history of visual art, stands for a new art movement of the (early) 20th century. The term is closely connected to modernity. The original aim of all avant-gardist movements (mostly elitist, perceiving themselves as forerunners) was always a change in society. Most avant-gardist movements in art emerged at the beginning of the 20th century from artists' communities sharing an idealistic belief in progress – such as Italian futurism, Russian constructivism, De Stijl (Holland) or German Bauhaus. All such movements reject the prevailing aesthetic norms of their time. Today, "avant-gardist" generally means a demonstratively modern artistic expression aimed to provoke and consequently to promote a new aesthetic or social ideal. Even if this ideal can't be realized, avant-gardist movements often

have a significant influence on prevailing trends in fashion, art and design of their time.

AXOR FINISHPLUS
AXOR term for (color) finishes. AXOR FinishPlus finishes are characterized by their exceptional brilliance, high durability and exclusiveness. Customers can choose from a large variety of standardized finishes such as Brushed Redgold, Polished Black Chrome or Polished Gold Optic. Therefore, AXOR FinishPlus finishes contribute significantly to the possibilities for personalization of the bathroom (compare: Individualization). The finishes are particularly resistant and much harder than a galvanized fixture. They also have an excellent color brilliance since they receive through the Physical Vapor Deposition (PVD) process an additional metal layer.

AXOR SIGNATURE
A service from AXOR that realizes individual demands such as lengthening, shortening or individual marking/labelling of AXOR mixers, showers and accessories. AXOR Signature plays an important role within the AXOR individualization philosophy since the service turns a bathroom product into a unique piece that fulfills the exclusive aesthetic taste of the customers (with own logo or emblem) or that is adapted to meet requirements that are based on special spatial conditions (longer shower arm for an extra-high ceiling) (compare: Individualization).

BELLE ÉPOQUE
This is the period of time around the turn of the 19th to the 20th century. It lasted about 30 years generally in Europe and affected especially the life in metropolises such as London, Paris and Vienna. A new cultural life started in cafes, lounges and theatres of the European core countries because of economic and technical progress, which affected also art, fashion, architecture and technology. This new era of freedom was also characterized by optimism and the new possibilities that technical improvements generated. Cabarets served as stages for writers, artists and actors; Parisian bohemians met in night clubs and variety theatres like the famous Chat Noir or Moulin Rouge in Paris. A parallel development took place in fine arts. During the time of Belle Époque, impressionism led to Jugendstil (Art Nouveau) and to Cubism. The most important representatives were Paul Cézanne, Gustav Klimt or Pablo Picasso. In architecture, a separation from historicism occurred; the builders first preferred Jugendstil and then turned over to the New Objectiveness, which started in the early 1920´s. The most important representative of Jugendstil in architecture was Paul Möbius. (compare: Jugendstil).

CLASSIC (DESIGN CLASSIC)
The adjective classic describes a design which is typical for its time, but at the same time so perfect and pure that it seems timeless. Classic designs are considered harmonious and complete – regardless of the associated epoch or art form. Therefore, classic is defined as timeless, in contrast to the circumstantial nature of fashion. Classic works can be found in music, architecture, fashion, art, design, literature and all other areas. Colloquially, the term classic is used today as a synonym for typical/original. Classics are considered to be perfect in form and pattern formation, making them likely to be imitated. Neither unique in form nor the first of their kind, these imitations can never reach the quality of the original. In design, a classic is the closest to a formal ideal, the basic idea, even if it is not as functionally perfect as its successors. Ray and Charles Eames's Lounge Chair is considered a modern design classic, while the iPod is presently called a classic. In bathroom design, the 1994 AXOR Starck collection is a design classic – primarily because the faucet, with its joystick handle and minimalistic design, was revolutionary in terms of operation and form. In visual arts and applied arts as well as in architecture, the Classic Modern Style includes artists and works of the period between the two world wars. The Bauhaus is one of the most important examples of this style.

CONCEPT/CONCEPTUAL
A concept (from Latin "conceptum" = the combined) is a plan, an idea for a project which can have artistic or creative value, even before its material realization. A concept advances the idea and incorporates many factors which play a role in the realization, success and the impact on, for example, a new product. The design constitutes the last stage of a concept. The concept is still recognizable in the completed product as the underlying formal and functional idea. In design, the quality of the concept is determined by how long-lasting the design is and how well the product functions. However, concept design, inspired in the seventies by concept art, concerns intellectual debate about the object, as opposed to its practical value for provoking a reaction from the user. Elements of concept design can be found in Radical Design and Antidesign, employed by Italian groups like Alchimia and Gaetano Pesceand in the New German Design (compare: New Design). Awards such as the Red

Dot Award: Design Concept illustrate how valuable concepts are – even before their realization – evaluating and acknowledging new design concepts, innovations and prototypes believed to be the precursors of tomorrow's important products. AXOR information: With WaterDream, AXOR has established a format through which conceptual potential can be achieved without compromising design creativity (similar to concept cars of the automobile industry). Space, water and humans are the only parameters for the international architects and designers. With no constraints related to market conditions, radical freedom and thinking emerges about product design and bathrooms. Many of the AXOR WaterDreams (established in 2000) turned into visionary products for the bathroom, such as the AXOR Massaud collection, the AXOR shower products designed by Front, or the AXOR LampShower designed by Nendo, which is itself is a new interpretation of the interaction between light and water.

CULTURE/CULTURAL

In our society, we use the word cultural (from Latin "cultura" = development, cultivation, processing) to describe institutions and activities such as the theatre, music, visual arts, literature, but also education and research. However, these are only the most visible expressions of a culture, which develops within a community and which is determined by a range of factors like language, politics, law, family structures, social values, religion and social conventions, education, communication skills, consumer habits, housing and health care, social behavior and responsible attitude towards individuals, society and the environment. The complex phenomenon of cultural identity within Europe is closely connected with the concept of civilization (as a theoretical counterpoint to the state of nature, instinctive behavior and the abuse of power). This led to a new image of state and society in the context of the Enlightenment in the 18th century. Culture can also be understood as a concept which works on both a large and a small scale. It is not only individuals who develop their own culture, but also every community – on the basis of familial, societal and religious structures. An individual might express their cultural identity through appearance, bodily care, or style of living. In larger structures, this identity presents itself as a subculture. In companies, concepts of morality, history, brand-specific standards of quality and sustainability, as well as socially responsible behavior all result in a culture which contributes to the formation of a specific identity (compare: Corporate Identity).

DESIGN

Design has two principal meanings: design in the sense of a process (a drawing, an idea or a creative concept) and design in the sense of an outcome (the appearance of the created object, as well as the international language of larger structures, such as those encountered in interior design and architecture). The word design (from Latin "designare" = to signify) has been introduced into many different languages. Following its emergence in craftwork, design has since flourished in numerous other fields. The most important are product design (e.g. furniture and household objects), industrial design (a term largely applied to the design of industrially manufactured products in contrast to craftwork, but is sometimes used to describe specialized machines for industrial production), interior design (special art), graphic design (means of visual communication such as typography, prints, marketing materials), corporate design (establishment of an homogeneous visual appearance), communication design, packaging design, fashion and textile design, color design, etc. Design encompasses not only the visual or aesthetic presentation of an object or a communication medium, but also its functionality and construction. The tasks of a designer include product conceptualization, selecting and processing materials and choosing the production technique. Design influences ergonomics and the usability of everyday equipment and devices, and understanding the emotional component of a design has become crucial in today's word. A well-designed product performs optimally, clearly conveys its function and is a pleasure to use both in the short and the long term.

DIAMOND CUT

Within gemology, cutting is a process which intensifies the shine of a gem by bringing out the optical effects which are already inside the stone. The cut of a diamond decides upon its brilliance. Cutting is part of the 4Cs (Color, Clarity, Cut, Carat) and is the most remarkable of these four criteria. The higher the quality of a cut, the more the stone shines. Only the perfect cut can bring out the unique fire of a diamond. There are around 1500 types of diamond cuts. The brilliant cut is considered the best-known cut, which is composed of small, polished surfaces. These surfaces, or facet (from French "facette" = bevel; partially polished, flat surface) cuts are used for other gemstones, mirrors and glass, and even to create special forms (compare: AXOR Starck V). AXOR information: For AXOR Edge, the diamond cut describes the partially refined surface structures

of the faucet. To achieve this texturing, a unique 3D structure is milled into the brass block at the handle or the lower part of the faucet. This structure is created using a diamond-tipped tool, the same one used when cutting diamonds. After that, the block is chrome-plated or refined with one of the AXOR FinishPlus finishes. The entire process creates a surface texture that is a special part of the faucet, standing in the Art Décoratifs cultural tradition.

DISCREET
The term (from Latin "decentia" = decency/civility) is a synonym for sensitive or befit. In aesthetics, this term means unobtrusive and restrained, describing the subtlety of a design element or an entire composition, in which no singular element dominates.

DYNAMICS/DYNAMIC
Dynamics (from Greek "dynamiké" = powerful or "dynamis" = power) refers to the movement of bodies under the influence of a force. The term dynamic usually describes the character of a person, an environment or an object and means that someone or something is full of energy, agile and light. It is often used to describe the character of a person, an environment or an object. Dynamic therefore signifies the opposite of static. However, dynamics can also mean the inner movement of a piece of art, a design object, a building or a room design. A sense of dynamism or movement can be achieved through deliberate nuances, rhythms or organic, sweeping lines.

ECLECTICISM/ECLECTIC
Eclecticism (from Greek "eklektos" = selected) is a design principle which draws upon different objects, styles, materials, elements or philosophies and combines them to create something new. As an artistic movement and design principle which openly draws upon existing or historic works of art, eclecticism has significantly shaped human creativity for centuries. It also characterizes different periods of European art from historicism onwards. The term eclecticism was used pejoratively in the past, applied to any art that lacked originality. In postmodernism, eclecticism as an art method became important for critical reflection on existing material. In design, the eclectic principle represents a technique to edit or reinterpret (art) quotations, or to create or reinterpret an original (creative and innovative) formal experience. This way, something new arises from established objects. Often, the result is a combination of references and symbols from the worlds of design and architecture (compare: AXOR Urquiola).

ELEGANCE/ELEGANT
Elegance (from Latin "elegantia" = fine taste or fineness) is associated with a sophisticated, stylish taste which has a distinctive and cultured appearance. People who dress elegantly and furnish their home in an elegant style wish to express a refined, cultivated sense of taste. The elements employed are mostly classical and harmonious, with bold or ornate elements often avoided.

ERGONOMICS/ERGONOMIC
Ergonomic is mostly used as a synonym for anatomically designed or optimal for human use. Ergonomics (from ancient Greek "ergon" = work and "nomos" = rule, law) is concerned with designing a work space that is efficient and gentle on the body. Ergonomic design aims to improve the interaction of man and machine and to create products that are easier to handle and more comfortable to use.

EXTRAVAGANT
The term extravagant means "in an eccentric or exaggerated, overstretched manner purposely different and therefore notable/exceptional". Previously used in a negative sense , extravagant today describes any creation in product design, architecture or interior design that is exceptional, new and unusual, partly futuristic, often made with the purpose to polarize.

FORMAL EXPRESSION
Formal expression describes the way in which an object or a room achieves a certain expression by means of its formal elements. Rooms and objects express themselves in their arrangement and via metaphorical references – for example a handle in the shape of a leaf. The term formal expression is in line with the idea that individual design elements (basic shapes, lines, colors, etc.) can achieve a certain expression through their arrangement – just like the words in a language. An object can therefore be soft or aggressive, expressive or concentrated, discreet or dominant, minimalist or sculptural.

FROG DESIGN
Frog Design is one of the most well-known international design studios. The company was founded under the name "Esslinger Design" in 1969 by Hartmut Esslinger. Working from Altensteig within the Black Forest, Esslinger worked with with Georg Spreng and Andreas Haug to create the Tri-Bel hand shower, for which Hansgrohe received its first design award in 1974. The studio had its international breakthrough

at the beginning of the 1980s, receiving global recognition for its work, particularly the legendary Apple IIc and Apple Macintosh designs. During this decade, the company changed its name to Frog Design and relocated to Silicon Valley. The acronym FROG is an abbreviation for "Federal Republic of Germany". Today, the design studio has offices around the globe.
www.frogdesign.com

GOLDEN RATIO
In art and architecture, the Golden Ratio is the ideal ratio among different lengths of an object or a construction to one another. It is considered the epitome of aesthetics and harmony and was used intuitively long before its formula was discovered. It is argued that the Golden Ratio can be found in many works of the Renaissance artists such as Raphael, Leonardo da Vinci and Albrecht Dürer. The Golden Ratio defines the harmonious partition of an object into a shorter and a longer section in the mathematical ratio of b:a = c:b. The ratio of the longer section to the total length is the same as the ratio of the smaller section to the longer one (compare: AXOR Uno).

HAPTICS/HAPTIC
Haptics (from Greek "haptikos" = able to touch) is the study of tactile sense. Through touching surfaces and by being touched, living organisms receive various impressions and information. In design, the haptic perception of an object influences our well-being. Our reactions, whether we experience comfort or disgust, a feeling of warmth or coldness, or a sense of ease or irritation, are intuitive and beyond our control. The term goes back to the German psychologist Max Dessoir. He recommended in his publication "Über den Hautsinn" in 1892 to name the study of tactile senses, following terms such as 'acoustics' and 'optics'. The tactile perception of a surface largely determines our emotional relationship to the object, but also our confidence in its ergonomic quality, for example in that of a chair or a musical instrument. Haptic design principles are used in different areas, e.g. in product packaging haptics (form and surface structure), where it is used as an important recognition factor for a brand. A pleasant tactile experience is a decisive product feature, especially for products which are used several times a day (e.g. bathroom faucets).

HARMONY/HARMONIC
Harmony (from Latin/Greek "harmonia"= agreement, concord) is an aesthetic term for the meeting and coexistence of two or more different but matching parts. These parts complement one another, resulting in a harmonious, balanced appearance. Ideally, all different parts retain their own identity, but join together to form a new unit. In most systems – as in music or color – the individual elements must share a common origin on a deeper level in order to be compatible (such as belonging to the same pitch in music or to the same color category).

INDIVIDUALIZATION
The term (from Latin "individuum" = individual being) has its origins in sociology, and refers to the increased desire in the West for individuals to construct their own identities during early industrialization and modernization. Though the term is used differently in sociology, psychology and economics, at the core it involves freedom of choice. Trend researchers have described individualization as a mega trend, one which affects value systems, consumption patterns and everyday culture. In the product sector, digital technologies such as 3D-printers, the internet, or programs of configuration create new possibilities for individualization. Websites that allow product configuration for vehicles are absolutely indispensable in this sector. Car buyers customize their cars online; choosing motors, colors and equipment packages. Today, product configuration (or customization) has reached nearly every area of everyday life. Food is assorted with different ingredients (My Muesli) and cosmetics are adjusted to the customer's special preferences (My Parfum). Individualization aims to fulfil one's own wishes and desires, allowing them to differ from others and to stand out from the (social) crowd. Interior design individualization – like product design – helps to express unique tastes and exemplifies exclusivity (individuality) (compare: AXOR FinishPlus, AXOR Signiture).

INTERIOR DESIGN
The aim of interior design is the artistic furnishing and decoration of a room. Interior design includes technical and structural aspects, as well as aesthetic, artistic expression. According to the BDIA (Bund Deutscher Innenarchitekten – Association of German Interior Designers), the legally protected professional title "Innenarchitekt" in Germany defines the tasks of an interior designer as follows: "The creative, technical, economical, ecological and social planning of interior spaces and connected to that, the constructional modifications of buildings." Besides the technical aspects, the interior designer creates the sensual perception of a room, which conveys relations and meanings that exceed spatial perception. The

representatives of the Bauhaus school sought to tear down the barrier between architecture and interior design. Today, their vision of architecture, interior design, art and product design as one integral task has become very popular once again.

LIFESTYLE
The term lifestyle means individual way of life. In common speech, lifestyle means the cultural form of life of a group of people. Cultural identities that do not refer to an individual are derived from this term and used in common language. In this context, it is common to speak of an American, a Western, or Eastern lifestyle. It not only represents certain values, but also conveys preferences in fashion, music and other areas. Attitudes towards health, professions, free-time, family and the nature of social relationships are also a part of a lifestyle. Lifestyle orientation includes the conscious presentation of one's personality (through cultural and fashion elements) and one's preferred style of accommodation. The ideal of any lifestyle, no matter what its specific orientation, is the creation and communication of individuality. The challenge, it seems, is to find a convincing (authentic) balance between individuality and the prevailing "Zeitgeist"/ convention.

LUXURY/LUXURIOUS
Luxury (from Latin "luxus" = richness, excess, opulence) means expenditures and activities which exceed the bounds of what is considered standard or essential in a society. In its positive meaning, luxury is regarded as a desirable situation, in which life is more comfortable for individuals and free from worry. Also, "en vogue" in our society is a luxury which is limited in time and which marks special occasions in life. A clearly negative meaning of luxury, however, is a lifestyle that is superfluous, irresponsible and wasteful. Yet luxury and norms are not to be understood separately from each other. Luxury can be defined as a deviation from a state culturally defined as normal. Against a background of relative wealth on one side and a decrease in quality of life on the other, luxury is less defined by material wealth and instead by immaterial values: personal time, health care, outdoor experiences, family life, space, self-determination, etc. In current discourse, products and services are considered as luxurious when they show unique selling points, are limited (e.g. Haute Couture), or if they enjoy a collector's item status (such as rare wines).

MINIMALISM/MINIMALIST
Strictly speaking, minimalism isn't a style, but a principle in design which can be used in many different styles. The aesthetic aim in minimalism is a functional and visual result characterized by elegance and a concentrated, controlled use of materials. This is achieved by using only as much material as necessary and by focusing on the core of a project. The motto "less is more" is based on an aesthetic rule used in some Asian cultures, where a strong impression is created through the minimal use of objects, ensuring that superfluous elements do not distract from the central idea. The adjective minimalist is often used as a synonym for clear, simple and reduced. A typical feature of minimalism in architecture and design is the avoidance of using too many features. Minimalist designs typically feature primitive colors (e.g. red, yellow, green, blue) or geometrically primitive forms (e.g. circle, square, triangle). Small dimensions appear in the context of large surfaces and smooth surfaces are often dominant. In most cases, this arrangement is connected with a cool, rational design and a highly functional character. In design, the term minimalism is associated with a fundamental, purist trend that consciously broke away from Studio Alchimia and Memphis in the 1980s. The ideal of minimalism is simplicity. Simplicity means that only a few factors contribute to the creation of a form and that relatively few influences are visible. The most exacting requirements in minimalist design are generated when there is a need to integrate complex components into a simple form in a harmonious, virtually invisible way. Minimalist product design therefore often encloses a complex interior or a complex processing of materials. The aim is to transform complexity (with regard to technical equipment or difficult structures) into a highly sophisticated and organizational form. Japanese designer Shiro Kuramata and French architect and designer Philippe Starck are among the most popular representatives of minimalism (compare: AXOR Starck).

MODERN/MODERNITY
In common usage, the term modern means contemporary, up to date, progressive or in accordance with the latest fashion. However, using the term modern as a synonym for fashionable is reductive. Modern refers to the latest developments in society, science and technology. In design, modern is mostly used in a contemporary context. It is less common to use the term with reference to Classical Modernity (early 20th century).

MODULE/MODULARITY/MODULAR
A module is a component of a larger system. Modularization (or the modular principle) refers to partitioning of an ensemble. In modular construction, systems are assembled from standardized individual components. In industrial production, modularization increases efficiency and the resulting modular product offers advantages for the users. Some highly sophisticated and common product lines in the automobile or furniture industry are based on modular construction, which makes it possible to customize a collection, or adjust it to changing circumstances (compare: AXOR ShowerCollection). In architecture, the modular principle offers a lot of advantages – especially in terms of costs and flexibility. Thanks to modern, computer-based production concepts, modular buildings and individualization possibilities or aesthetic designs are no longer considered as insurmountable hurdles.

MONOLITH/MONOLITHIC
A monolith (from ancient Greek "monólithos" = unified stone or one-stone) is a naturally-shaped or carved block formed from one type of stone. Boulders (large, single pieces of stone) or overhanging mountain ledges are considered (natural) monoliths, as are island rocks (e.g. Uluru in Australia) or rock towers (e.g. Angels Landing in the USA). Monoliths created by human hands include stone pillars, e.g. The Obelisk of Axum, Ethiopia, and the Stone of the Pregnant Woman, Lebanon. The latter is one of the largest carved monoliths and was originally planned to be in the temple complex of Baalbek. The adjective monolithic is usually used synonymously for anything consisting in one piece or one block. In architecture, the term refers to buildings (or parts of buildings) that are built out of one single material (stone or cast concrete). Similarly, underground tanks or water reservoir tanks of a single mold are also called monolithic. In general, objects are described as monolithic if they consist of a single part (compare: AXOR MyEdition).

MONUMENT/MONUMENTAL
Important/meaningful memorials, buildings or large paintings are called monuments (from Latin "moneo" = to commemorate sb./sth., admonish, call attention to) and often have the purpose of preserving the memory of historically important people or events. These could be burial mounds (Hågahügel, Sweden), giant sculptures (Mount Rushmore, USA), or symbolic buildings (Walhalla, Germany). One common usage of monumental is as an adjective for anything reminiscent or serving as a monument, made in large dimensions and therefore very impressive. In architecture, the Neoclassicism of the early 20th century was influenced by the monumental approach to building from antiquity, the Baroque and the Classic. The main building of La Sapienza University (Rome, Italy), the Haus der Kunst (Munich, Germany) or the Michigan Central Station (Detroit, USA) are all examples of this (compare: Neoclassicism). Monumental buildings or furniture have – due to their impressive dimensions – a memorial effect (compare: AXOR Citterio).

NATURAL/NATURE-INSPIRED DESIGN
In common usage, the adjective natural means real, authentic, original and of indigenous origin. This general meaning was coined during the Enlightenment in Rousseau's philosophy, which accentuated the difference between a natural and a civilized way of life. The use of natural in the sense of biological, non-synthetic and pure only became dominant with industrial development and the introduction of artificial materials and artificially produced food. With the increasing mechanization of our surroundings and a growing sense of alienation from nature and traditions, the idea of a natural environment has come to assume greater prominence as an ideal or utopian state. The term natural describes a state of affairs which hasn't been altered by civilization or education. In design and architecture, the term natural refers to a process of imitation with the purpose of achieving an overall impression reminiscent of nature, with the aim to create a sense of well-being. When designing an object and when choosing the materials, all human senses are considered; visual and spatial perception, the senses of smell and touch, sensations of warmth and cold and also cultural connotations. Consequently, nature-inspired design is a design principle that uses nature as role model and recreates a sense of nature. Consequently, nature-inspired design products should create an overall natural impression and enhance the feeling of well-being (compare: AXOR Massaud).

NATURALIST/NATURALISM
Naturalism is a movement in literature and art that experienced its zenith from 1870 until 1890. Artists of naturalism had the aim to portray objects as they are; as realistically as possible, convincing in perspective, accurate in every detail and without euphemism. However, accuracy in appearance, carried to extremes by photorealism, is no guarantee that the message conveyed is genuine or true.

NEOCLASSICISM

Neoclassicism (in contrast to classicism of the late 18th and the early 19th century) is an international architecture trend of the 20th century. The movement turned against Jugendstil and historicism after the First World War and was then characterized by referring to classical style elements and forms. The creators of Neoclassicism studied the buildings of Greek and Roman Antiquity, borrowing and then modifying their clear structure, geometrical layout, monumental appearance and classical order of pillars and gables. Famous buildings in the Neoclassical style of architecture are found in the USA (e.g. 30th Street Station in Philadelphia), in France (e.g. the Palais de Chaillot in Paris), or in Finland (e.g. the Finnish Parliament in Helsinki). A unique neoclassical style with a monumental focus emerged in Germany under National Socialism and in fascist Italy, for example from Albert Speer or Enrico del Debbio. Famous examples in Germany include the Olympic Stadium and the Neue Reichskanzlei. In Italy, examples include the sports facilities Foro Italico in Rome, as well as St. Peter's Basilica and the Basilica of St. Paul in Rome. In Russia, socialist Neoclassicism influences many cities even today: the Moscow State University is one example, as is the House of Soviets in St. Petersburg.

NOSTALGIA/NOSTALGIC

Nostalgia (from Latin nostalgia" = homesickness, Greek "nóstos" = homecoming and "álgos" = pain) describes the memory of good times past: a feeling of undefined, retrospective longing which motivates one to recall or revive past styles in art, music or fashion. Nostalgic design or nostalgia is invoked by products, spaces, and music (e.g. by reusing flower power elements of the 1960s, or the music of the 1980s). The focus is on reconstructing a past style as accurately as possible, without adding new elements, or on creating a new style by combining old and new elements (compare: Retro) (compare: AXOR Montreux).

ORGANIC DESIGN

Organic Design is both a style and a principle of design and construction. As a style, it constitutes the polar opposite of geometric, functionalist styles. It is inspired by organic shapes and sometimes also by inorganic, particularly crystalline, structures, both of which appear in nature. Classical features of Organic Design are powerful curves and dynamic, round shapes. Typically, (but not exclusively) amorphous forms are used which appear natural and symbolize nature. The aim is to achieve a pleasing, natural impression and many organic designs allude to structures that occur naturally. As a design principle, Organic Design can be found in many disciplines and there is no stylistic unity. Organic forms can be found in traditional, high-tech or minimalistic styles. Organic Design is not characterized by stylistic expression, but rather by a principle of construction that imitates nature (e.g. cellular, netted, skeletal, crystalline) and by abandoning classical static weight-bearing structures in favor of a more flexible and elastic construction. What all organic objects have in common is a design that is developed from the inside out and a focus on accentuating expression. Common techniques include asymmetrical construction, flowing lines, soft shapes, directed structures, plastic volumes and dynamic forms. In organic architecture, buildings might appear to grow or they might even appear to have an explosive energy. Frank Lloyd Wright (Guggenheim Museum New York), Eero Saarinen, and Hans Scharoun in Germany each produced ground-breaking work in this field. Today, futuristic buildings by architects such as Frank O. Gehry, Zaha Hadid, or Peter Cook (Kunsthaus Graz) increasingly showcase organic design elements. The most important representatives are Ron Arad, Luigi Colani, Massimo Iosa-Ghini, Ross Lovegrove (seats for Japan Airlines, 2002) and Philippe Starck. Objects designed through Organic Design principles are often shaped ergonomically and made of high-quality, sustainable materials which fit the overall idea of the product (compare: AXOR Starck Organic).

ORIGINAL

The word original (from Latin "origo" = beginning) has several meanings. As opposed to a counterfeit, an original is a genuine product or object. As opposed to a copy, an original is a work created by the artist; it is neither changed or replicated. Original can also mean the initial version or prototype; the first version of a text, painting, work of art, or product model. As an adjective, original can also mean innovative, creative, or ingenious. In this context, the adjective original describes something incomparable and exceptional.

PROPORTION/PROPORTIONAL

In aesthetics, proportionality means a ratio of size or length which is particularly pleasing to the eye. In fine arts, proportion is used to measure the ideal ratio of individual parts to one another and to the whole. In architecture, it is the measurement of width, height and depth in relation to the complete building (compare: Golden Ratio). How we perceive the balance of proportions is not a matter of chance. It is determined by biology, aesthetics and culture.

American cars seem overproportioned to Europeans, but still harmonious as a whole. Extra-long necks, considered an ideal of beauty in some African cultures, challenge our perception of proportions. In fashion, taste changes faster than in other areas, whereas in architecture it is relatively more constrained by structural requirements.

PURISM / PURISTIC

Today, the term purism (from Latin "purus" = clear / pure or French "le purisme" = the Purism) is mostly used as a synonym for simplicity and frugality. Purism is a style within the modern art and architecture of the 20th century. It was originally used in the sense of linguistic purism, which advocated a pure, unaltered style, free of any foreign objects. Purists want to keep a cultural characteristic as authentic, original and pure as possible. A strictly classical design can also be considered purist. Purism is therefore always associated with a certain sense of stringency. As a design movement, purism developed from an aesthetic trend which itself derived from Russian constructivism, a style which called for clear, austere art modelled on the basis of purely architectural and geometric forms. The ideal is a composition of elementary geometric forms that avoid purely decorative effects. In contemporary design terminology, purism stands for the extremely reduced use of forms with an almost ascetic character. An ethical component can also be perceived: modesty in outward appearance meant to convey a nearly sacral concentration on intrinsic value. Since purism also represents the ideal of authenticity, nothing is concealed (as opposed to minimalism) to achieve a more homogenous and harmonious appearance. All elements should speak for themselves. Typical features of purism include a minimal combination of materials, untreated surfaces, clarity through sharp lines, geometric or archetypal forms (including traditional, simple forms), strong contrasts with few primary colors and combinations of black, white and grey. Purism is characterized by structure, timelessness and substance (compare: AXOR Uno).

QUOTATION

In general usage, quotation refers to the literal repetition of a part of a text. In the context of art, architecture and design, quotation describes the reclamation of parts of an older work in the process of creating a new one. Quotation is a technique that has been popular in many periods in art history and was revived in the 20th century, particularly by postmodernists. While in postmodernity quotations were mostly used in an ironic and playful manner, designers in the modern eclectic style employ quotations as a means of deriving new design interpretations and, ultimately, new designs.

SCULPTURE / SCULPTURAL

A sculpture (from Latin "sculpere" = to carve, create, chisel) is a three-dimensional body (mostly a piece of art) which has a powerful and symbolic appearance from several perspectives and which clearly distinguishes itself from its environment (compare: Plastic). A sculptural design element delivers its own, autonomous statement, is independent of its environment and has a strong influence on the viewer's perception of a space (compare: AXOR Edge).

SENSUALITY / SENSUAL

Colloquially, sensuality means turning the senses or the receptivity of the sense organs toward outer impressions. Perception makes it possible for us to distinguish our environment for its materials and forms, and to recognize and categorize things from their characteristics. Often sensuality is associated with eroticism, but also with sensual driving forces, preferences, desires and passions, needs, and feelings of pleasure and displeasure. Sensual as an adjective describes something "happening through or recognizing something by senses" or "belonging to the senses". The term sensual is also used in the context of "concentrating on senses", if the product focuses on the human senses. Design can be sensual, if it attracts someone in an emotional way and if touch, sight and taste are triggered in a positive way. Sensual design is often combined with a comfortable feel and / or balanced look (compare: Golden Ratio) (compare: AXOR Starck Organic).

STYLE

Style is primarily the expression of personality. It is not restricted to individual expression and can also signify the presentation and expression of an epoch (such as Jugendstil), a region (like the Italian "Bel Design"), or an artist / group of artists or designers (Bauhaus, Memphis, etc.). A style is identified by recurring, characteristic features and by a particular choice and use of forms. In fine arts, it is called a style if these features form a pattern that appears in numerous individual works. These characteristics can develop into a personal style (also called individual style) found in art, design or in fashion. However, a style can be considered archaic, idealist or naturalist, independent of personalities or time periods. In

design, the most widely known stylistic categories are functionalist, minimalist, organic and classical.

STYLE MIX
A combination of style elements from different historical contexts (compare: Eclecticism) or from different aesthetic backgrounds. A style mix typically features objects taken from different designs. However, these different styles are not mixed within a product or a collection, ensuring that the individual style remains distinguishable. This is a commonly used method in interior design. Style elements are often used sparingly to establish accents and contrasts, attempting to create tension and challenge familiar perspectives. This lends a distinctive character to a minimalist or purist ambience. The intention is to invite a fresh perspective on objects considered as aesthetic standard-setters due to their immaculate appearance.

SYMBOL/SYMBOLIC
A symbol (from Greek "symbolikós" = identification or identity mark) always carries a meaning. It is an image defined by certain conventions and conveys a meaning that is open to interpretation. Whereas a sign conveys something specific, symbols are complex, representative of something that is imperceptible. Symbolic in this sense means representative or "referring to a deeper meaning". In the context of design, symbols are not employed as direct signs (e.g. as in language theory or with traffic signs), but rather convey an indirect message, as a symbol goes beyond the meaning of the object itself. The meaning of symbols in religions, myths or art often resist translation or interpretation by reason alone. A similar depth of meaning can be found in design, but symbols in design mostly have an emotional function. Either the design itself conveys a familiar, conventional world (such as the wing chair or the AXOR Starck faucet, reminiscent of an old-fashioned pump) (compare: Archetype), or individual design elements stand for different aspects of life – such as the color gold for luxury, chrome for sophisticated technology, or leaf-shaped for nature. The symbolic function of design (as opposed to a mere indication of intended use and operation) becomes apparent in its relation to the social context. For instance, Bauhaus symbolized avant-gardist ideas, functionalism represented industrial progress, country style was a symbol for the simple life and minimalism stands for sophistication and high-tech comfort.

TENSION
In physics, the term tension describes the force inside an elastic body. A more metaphorical understanding is used in design, where the body is rarely elastic and the force in question is not of a physical nature, but manifests itself as a visual and emotional energy. Tension is created through polarization or a hierarchical structure, rendering an object more desirable and attractive in the long term.

TIMELESS
Not constrained or subject to a fashion or era. Timeless can be defined in totally different ways and can relate to events, people, or objects. In everyday usage, any long-awaited aesthetic unaffected by changes in fashion is labelled timeless (compare: Classic).

UNICUM
A unicum (from Latin "unus" = one, one single) is an object or a product which only exists once in this form. Even though the (democratic) nature of design manifests itself in reproducibility and serial production, unica today are no longer restricted solely to the art market. Instead, some design products are marketed (and priced) as limited editions of a serial design, or as unique objects (compare: AXOR Signature).

URBAN
The adjective (from Latin "urbanus" = belonging to the city, to: urbs = city) stands for the city or characterizing urban life. Individuals are described as educated or sophisticated if their social manners or appearance are urban. The term urban design describes town planning and development and includes the planning and the creation of all building measures in a city or landscape. That includes public buildings as well as residential buildings, open spaces and infrastructure. In the context of products and interior design, creations with an urban touch or character are aimed towards usefulness in the modern metropolis. Urban furniture fits perfectly into big-city-life within loft spaces and skyscrapers, and is characterized by pure elegance, without ornamentation or other representative details.

IMPRINT

PUBLISHER
AXOR / Hansgrohe SE

PHOTOGRAPHY
Bohmann Sjöstrand
Marco Craig
Lorenz Cugini
Alex Dwyer
Tom Hegen
Jehle & Will
Kuhnle & Knödler
Uli Maier
Gulliver Theis
Markus Wendler
Mattia Zoppellaro/contrasto/laif

3D ARTISTS
RenderFolk
Spot Studio S.L.
recom GmbH & Co. KG

PHOTOGRAPHY AXOR INSPIRATIONS
Villa Copehagen, Copenhagen: Stine Christiansen, Tom Hegen
Designhotel Laurichhof, Pirna – Designhotel Laurichhof
Arte Surfside, Miami Beach – Kris Tamburello
The Audo, Copenhagen – Alex Dwyer
Rosewood, Sao Paulo: Ruy Teixeira
Private Apartment, Prague – Jakub Komrska
The Alchemist, Copenhagen – Claus Bech
Sonne Seehotel, Eich: Jochen Splett
Chou Chou, Paris: Nicolas Anetson
Banyan Tree Anji – Banyan Tree

LITHOGRAPHY
Eder GmbH, Ostfildern

AXOR

AXOR Price Book 2024 en-FI · Subject to change in the interest of technical advancement

AXOR / Hansgrohe SE
Helsinki Branch Office
Arabiankatu 12
00560 Helsinki
info@axor-design.fi

WWW.AXOR-DESIGN.COM/FI