

Product Book 2024

Bathroom & kitchen range

hansgrohe-asia.com

Hansgrohe contact

Hansgrohe Headquarters

The Hansgrohe Master Service - Headquarters

Service hours:
Monday-Thursday: 8:00 am - 4:00 pm
Friday: 8:00 am - 3:00 pm

Phone: +49 7836 51-1282
Fax: +49 7836 51-1440
info@hansgrohe.com

You will also find technical information at
pro.hansgrohe-int.com

Global Projects Services - Headquarters

gpservices@hansgrohe.com

You will also find tender texts and planning details at
pro.hansgrohe-int.com/planning-data

Hansgrohe Aquademie - Headquarters

Monday-Friday: 7:30 am - 7:00 pm
Saturday-Sunday: 10:00 am - 4:00 pm

Hansgrohe SE
Hansgrohe Aquademie
Auestr. 9
77761 Schiltach/Germany
Phone: +49 7836 51-3272
Fax: +49 7836 51-1505

The Aquademie is our adventure centre on all aspects of water.
pro.hansgrohe-int.com/aquademie

The prices stated are non-binding net price recommendations without the locally applicable VAT. This must be incorporated into calculations when quoting for a non-binding price recommendation for consumers. Errors and omissions excepted.

Upon publication of this price list, all previously published price lists are no longer valid.

Figures given for dimensional drawings are in mm.

When installing the products, please follow the instructions in the installation manual.

All products are subject to availability. The availability may be temporarily impacted by material shortages, interruptions in the supply chain or other force majeure events. Please contact us for further details.

The following general terms and conditions apply: **hansgrohe-asia.com/en/terms-of-conditions**

Contents

	The brand hansgrohe	8
Showers	**Overview Showers**	54
	Hand showers	69
	Shower sets	85
	Wall bars	115
	Shower holder sets	125
	Shower holders	137
	Shower hoses	145
	Overhead showers	151
	Showerpipes & shower panels	195
	Drains	239
	Wastes & overflows	259
	Thermostats exposed installation	279
	Thermostats concealed installation	293
	Basic sets	339
Mixers	**Overview Mixers**	366
	Metropol	379
	Metris	395
	Finoris	407
	Tecturis	417
	Vivenis	439
	Talis	449
	Focus	479
	Rebris	495
	Logis	511
	Vernis	529
	Electronic mixers	547
	Accessories	551
Washbasins	**Overview Ceramics**	588
	CubeStack Washbasins	595
	MoonWake Washbasins	597
	MellowTide Washbasins	599
	LakeShore Washbasins	605
	Xuniva Washbasins	609
Kitchen	**Overview Kitchen**	626
	Kitchen sinks	635
	Kitchen mixers	653
Planning	Planning & Installation	708
Spare parts	Spare parts	748
Flow diagrams	Flow diagrams	767





Incomparable experiences with water

Check out our modern bathroom planning solutions. Alongside innovative technology, which enables the user to enjoy water responsibly, it's all about ergonomic comfort and aesthetic indulgence. We are therefore constantly working on developing new products. Design the perfect wellness oasis for your customers with everything from the PowderRain spray type for sensual showering, to our new installation masterpiece the iBox universal 2, right through to the Tecturis tap range with its clean lines.



hansgrohe – the bathroom pioneer since 1901



In 1901, Hans Grohe founded his metalwork business. He was a visionary, recognising the changing role of the bathroom in the home (despite it being a fairly new concept to most at the time).

The Hansgrohe company has been shaping bathroom culture from day one. Founder Hans Grohe started out small in 1901, with a metal pressing workshop in Schiltach in the Black Forest. You can still find our innovative hub and corporate headquarters there today. These days, the hansgrohe brand has an international reputation for excellence. The people who work at hansgrohe are passionate about product refinement and water, and it's their expertise in engineering and their love of experimentation which really set us apart as a company. But our biggest appeal is the expertise and commitment of everyone who works here. The energy and drive to constantly craft and refine is reflected in all our products, from revolutionary bathroom innovations right through to pioneering water-saving technologies. These and other innovations will continue the hansgrohe brand's success story.



2001

iBox universal
The first and only basic set for all standard and thermostatic mixer solutions – a revolution in concealed installation.



2021

RainTunes*
We combine water with sound, light, imagery and fragrance into one holistic wellness experience.

*RainTunes only available for certified partners.



2022

EcoSmart+
Eco-friendly tap that consumes just 4 l/min at 3 bar. Less water, less energy consumption.

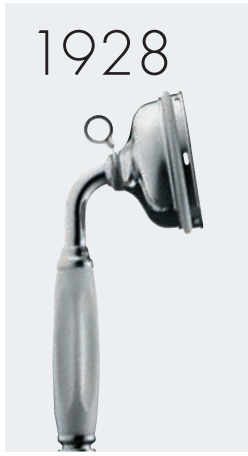

Hand shower
The first hand shower with a white porcelain handle. This hansgrohe innovation makes showering affordable for many households for the first time.



Unica shower rail
Thanks to this revolutionary idea, hand showers can be mounted at any height.



Tribel
First design-award-winning hand shower in bright colours and with three spray types.



EcoSmart
New technology in the Mistral Eco shower head that reduces water consumption by 50% at the time. This sets a milestone towards a sustainable future.



Raindance
The first hand shower with an XXL shower head, flat silhouette and short handle. The all-rounder becomes a trendsetter.



CoolStart
Energy-saving technology that only allows cold water to flow when the handle is in the middle position.



PowderRain
Sensational showering with softly enveloping micro-droplets.



FinishPlus
High-quality finishes provide a variety of design options.



Dream bathrooms*
Expanding the range to include furniture, ceramics and mirrors – hansgrohe offers product solutions for a holistic bathroom experience.

*Only available for certified partners



Pulsify Planet Edition
We can be part of the circular economy through the use of recycled and reusable materials.



Green Vision
Concept study on the bathroom of the future featuring almost waterless regeneration.

Our values – your advantages





Pioneering

Intuitive operation, lower water and electricity bills or less need to clean: All factors that will leave your customers beaming from ear to ear. Build on pioneering innovation with excellent customer value. This is precisely what our experts in our research departments are working towards in the sound and spray laboratory, where they develop high-quality products with a certain je ne sais quoi. With beautiful surface finishes, energy-efficient spray types, built-in safety, and integrated indulgence.

With our innovations, the focus is not only on novelties but also on optimising existing products. The latest evolution of the iBox universal draws on years of experience with over eleven million installed products and continuous feedback from specialists and planners. As a result, the new **iBox universal 2** and the new pre-fab sets make installation twice as fast as it was with the previous model.

Award-winning products

Elegant functionality appeals to both the heart and mind, and it's something we specialise in. Our products are consistently award-winning, outlasting fads and instead providing long-lasting value, whether they are found in the home or in a world-famous hotel. Good design makes all the difference and always ensures an excellent experience. With over 30 years of collaboration with PHOENIX, hansgrohe is a **leader** within the industry, racking up more than **700 awards** for our design achievements.





Highest standards

Providing our customers with the highest quality at all times is a fundamental part of the hansgrohe company philosophy. We have been manufacturing high-quality bathroom and kitchen products for over 120 years, and we are proud of our extensive quality control processes, especially as many of our products go above and beyond the required standards.

We offer our consumers a voluntary **guarantee of 5 years*** plus guaranteed availability for 15 years.

Green. Greener. Eco* 2030

The aim of our sustainability strategy is to do what we can within our sphere of influence to conserve all the resources that are becoming increasingly scarce on Earth or whose consumption fuels global warming.

"By 2030, we plan to convert our entire water-bearing product range for the hansgrohe and AXOR brands to **water- and energy-saving technologies**. In future, they will need to be part of every energy-related renovation and every energy-efficient new build. We are dedicated to working with others to make the right emission-based changes in bathrooms and kitchens."

Hans Jürgen Kalmbach
Chairman of the Executive Board of Hansgrohe SE

* For more information, visit: **hansgrohe-asia.com/service/warranty**
** Only available in certain countries

Less water – pure joy

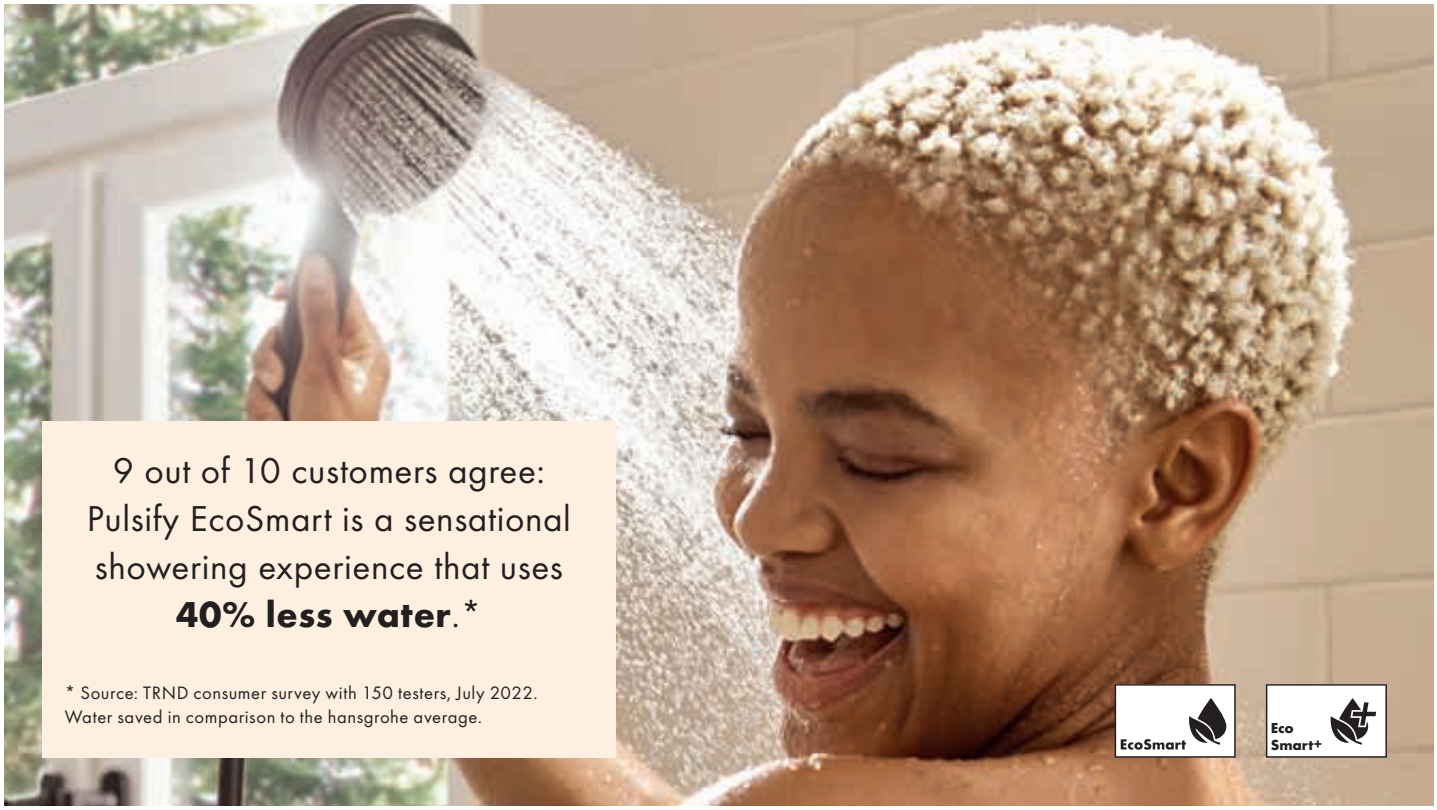

9 out of 10 customers agree: Pulsify EcoSmart is a sensational showering experience that uses **40% less water**.*

* Source: TRND consumer survey with 150 testers, July 2022. Water saved in comparison to the hansgrohe average.

The usage phase of our products offers the biggest CO_2e saving

Our research shows: The usage phase of a hand shower is by far the most CO_2e-intensive. This means around **1,000 times more CO_2e** is emitted when showering than during the manufacturing of the shower. We therefore plan to convert our entire portfolio of showers and taps to "ECO" by 2030. In specific terms, we are reducing the water and/or energy consumption of water-bearing products in usage by at least 22 percent (compared to 2020, the base year).

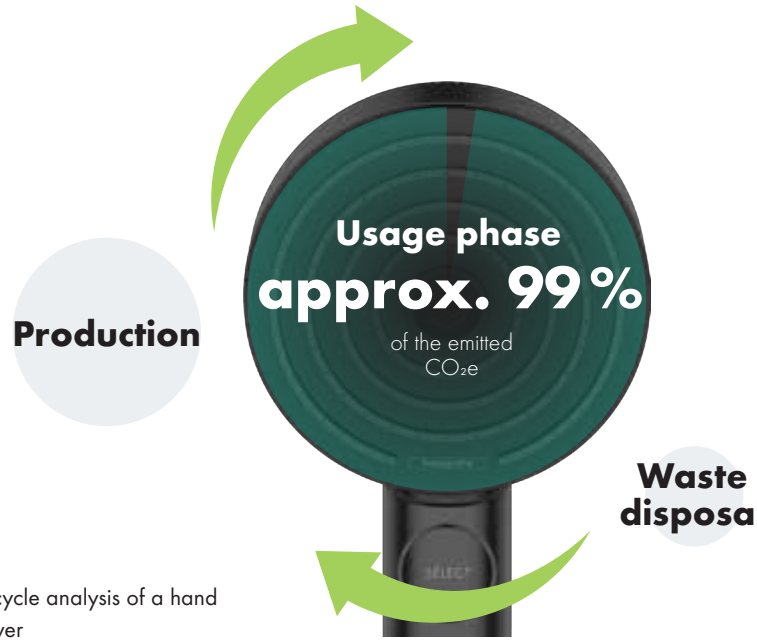

Life-cycle analysis of a hand shower



Fitted with EcoSmart+, **Tecturis** reduces water consumption to just 4 l/min at 3 bar – without taking away any of the joy water brings. The CoolStart technology also helps users to save energy.

We are part of the circular economy

Pulsify Planet Edition

Planet Edition is all about conserving resources throughout the entire product life cycle. By using recycled materials*, we become part of the circular economy. All while maintaining the famous hansgrohe standard and demonstrating that waste is only waste if we treat it as such.

* Shower handle, WallStoris accessories, hose yarn

Transparent and fact-based

The relevant stakeholders see us as credible because we are transparent about our environmental impacts. For example, we contract independent parties to verify our environmental product declarations and we participate in company rankings.



Simply scan the code to find out more about sustainability

Phase-out products 2024
Available while stock lasts

	Code no.
Shower bar sets	
Raindance Select E	
Shower set 150 3jet with shower bar 65 cm and soap dish	27856000
Raindance Select S	
Shower set 150 3jet with shower bar 90 cm and soap dish	27803400
Crometta 85	
Shower set 150 3jet with shower bar 90 cm and soap dish	27767000
Shower bars	
Unica	
Shower bar Classic 65 cm with Sensoflex shower hose 160 cm	27617000 27617820
Shower holder sets	
Croma 100	
Shower holder set Mono with shower hose 160 cm	27575000
Shower holder set Multi with shower hose 160 cm	27595000
Shower holders	
FixFit	
Wall outlet E stop with non-return valve and shut-off valve	27452000
Wall outlet S without non-return valve	27453000
Wall outlet S with non-return valve	27456000
Overhead showers	
Raindance Select S	
Overhead shower 240 2jet with ceiling connector	26467400
Raindance Rainfall	
Overhead shower 180 2jet	28433400
Raindance Rainmaker	
Overhead shower 600 3jet without lighting	26115000
Overhead shower 600 3jet with lighting	26117000
Basic set for overhead shower 600 3jet	28412180
Shower arms	
Shower arm 24.1 cm	27409000 27409820
Showerpipes	
Raindance Select E	
Showerpipe 300 2jet EcoSmart 9 l/min with ShowerTablet Select 300	27283400
Croma Select S	
Showerpipe 180 2jet with single lever mixer	27255400
Thermostats	

	Code no.
ShowerTablet	
Shower thermostat 350 for exposed installation	13102400
Bath thermostat 350 for exposed installation	13107400
Thermostat 600 universal for exposed installation for 2 functions	13108400
Shower Sets	
Raindance Select S	
Shower set 150 3jet with shower bar 90 cm and soap dish	27803400
Raindance Select E	
Shower set 150 3jet with shower bar 65 cm and soap dish	27856000
Mixers	
Vernis Shape	
Single lever bath mixer for exposed installation project pack (6 pcs.)	71457000
Single lever basin mixer 70 with isolated water conduction and pop-up waste set project pack (6 pcs.)	71596000
Single lever shower mixer for exposed installation project pack (6 pcs.)	71657000
Logis E	
4-hole rim mounted bath mixer	71316000
Accessories	
Logis	
Towel hook	40511000 40511820
Towel holder twin-handle	40512000 40512820
Grab bar	40513000 40513820
Liquid soap dispenser	40514000 40514820
Soap dish	40515000 40515820
Bath towel rail	40516000 40516820
Spare roll holder	40517000 40517820
Toothbrush tumbler	40518000 40518820
Toilet brush holder wall-mounted	40522000 40522820
Toilet paper holder with cover	40523000 40523820
Toilet paper holder	40526000 40526820

	Code no.
Kitchen mixers	
Talis M52	
Single lever kitchen mixer 170, EcoSmart, pull-out spray, 2jet	32845000
Single lever kitchen mixer 170, pull-out spray, 2jet, sBox	73860000 73860800
Logis M31	
Single lever kitchen mixer 160, EcoSmart, 1jet	71860000
Logis M32	
2-handle kitchen mixer 220, EcoSmart, 1jet	71283000
2-handle kitchen mixer, EcoSmart, wall-mounted highspout, 1jet	71284000
2-handle kitchen mixer 220, 1jet	71285000
2-handle kitchen mixer, wall-mounted lowspout, 1jet	71287000

Packaging units

Please consider the packaging units when placing your order.

Code no.	Number Of Items Per PackingUnit
01	
01000180	8
01001180	8
01002180	8
01500180	10
01800180	10
01850180	10
06	
06010000	2500
10	
10452180	6
13	
13111400	3
13114000	7
13114140	7
13114340	7
13114670	7
13114700	7
13114990	7
13116000	10
13116140	8
13116340	8
13116670	8
13116700	8
13116990	8
13117000	7
13122000	10
13123000	7
13132000	20
13141000	5
13141400	5
13151000	4
13151400	4
13159180	10
13161000	4
13161400	4
13171000	4
13171400	4
13201000	7
13211000	10
13233180	5
13244180	6
13414000	35
13423000	20
13424000	15
13437180	4
13439180	8
13440180	4
13444180	4
13560180	7
13588000	30
13593000	15
13593340	15
13595000	30
13597000	24
13601000	20
13604000	20
13620180	24
13622180	25

Code no.	Number Of Items Per PackingUnit
13901000	100
13903000	100
13904000	100
13913000	750
13950000	40
13950140	36
13950340	36
13950670	36
13950700	36
13950990	36
13952000	50
13954000	50
13954820	36
13964000	100
14	
14095000	56
14096000	56
14495000	28
14780000	4
14785000	4
14806000	3
14820000	4
14820800	4
14821000	4
14821800	4
14822000	4
14822800	4
14823000	4
14834000	4
14834800	4
14847000	4
14847800	4
14857000	4
14857800	4
14883000	4
14883800	4
14884000	4
14884800	4
15	
15310180	3
15311180	3
15346000	31
15355000	2
15355400	2
15355600	2
15356000	2
15356400	2
15356600	2
15357000	2
15357400	2
15357600	2
15358000	2
15358400	2
15358600	2
15380000	2
15380140	3
15380340	3
15380670	2
15380700	4

Code no.	Number Of Items Per PackingUnit
15380990	3
15381000	2
15381140	2
15381340	2
15381670	2
15381700	2
15381990	2
15382000	2
15382140	2
15382340	2
15382670	2
15382700	2
15382990	2
15384000	2
15384140	2
15384340	2
15384670	2
15384700	2
15384990	2
15554000	4
15554140	4
15554340	4
15554670	4
15572000	4
15572140	4
15572340	4
15572670	4
15583000	4
15583140	4
15583340	4
15583670	4
15705000	12
15706000	9
15707000	9
15708000	10
15712000	10
15714000	10
15714140	10
15714340	10
15714670	10
15714700	10
15714990	10
15734400	12
15735400	6
15736400	12
15737400	12
15738400	10
15741000	10
15742000	10
15743000	10
15743140	10
15743340	10
15743670	10
15743700	10
15743990	10
15744000	10
15745000	10
15747000	10
15748000	10

Code no.	Number Of Items Per PackingUnit
15755000	6
15756000	9
15757000	10
15758000	10
15758140	10
15758340	10
15758670	10
15758700	10
15758990	10
15760000	10
15760140	10
15760340	10
15760670	10
15760700	10
15760990	10
15761000	10
15762000	10
15763000	10
15763140	6
15763340	6
15763670	6
15763700	6
15763990	8
15764000	10
15764140	10
15764340	10
15764670	10
15764700	10
15764990	10
15765000	6
15767000	10
15768000	10
15773000	8
15774000	7
15930180	25
15932000	25
15970180	25
15972000	40
15973180	50
15974180	50
15981180	20
24	
24010180	6
24100000	35
24100670	30
24100700	28
24101000	35
24101670	35
24101700	30
24110000	28
24110140	28
24110670	30
24110700	30
24111000	28
24111140	28
24111670	35
24111700	35
24120000	30
24120670	30

Code no.	Number Of Items Per PackingUnit
24120700	30
24121000	30
24121670	30
24121700	28
24125000	30
24125140	30
24125670	30
24125700	30
24126000	30
24126140	30
24126670	30
24126700	30
24130000	12
24130140	12
24130670	12
24130700	12
24132000	12
24132670	12
24132700	12
24139000	24
24139140	24
24139670	24
24139700	24
24140000	4
24140140	4
24140670	4
24140700	4
24141000	4
24141140	8
24141670	4
24141700	8
24149000	24
24149140	24
24149670	24
24149700	24
24150000	3
24150670	2
24150700	2
24151000	2
24151670	2
24151700	2
24160000	12
24160670	12
24160700	12
24161000	12
24161670	12
24161700	12
24170000	10
24170670	10
24170700	10
24171000	10
24171670	10
24171700	10
24240700	2
24250670	2
24250700	2
24270000	2
24291670	2
24291700	3

Code no.	Number Of Items Per PackingUnit
24301000	20
24301670	20
24301700	20
24302000	20
24302670	20
24302700	20
24303000	20
24303670	20
24303700	20
24320000	65
24320140	65
24320670	65
24320700	65
24321000	65
24321140	65
24321670	65
24321700	44
24330000	4
24330140	4
24330670	4
24330700	4
24331000	4
24331140	4
24331670	4
24331700	4
24333000	4
24333140	4
24333670	4
24333700	4
24337000	12
24337140	12
24337670	12
24337700	12
24338000	30
24338140	30
24338670	30
24338700	30
24339000	12
24339140	12
24339670	12
24339700	12
24340000	2
24340140	2
24340670	2
24340700	2
24350000	3
24350670	2
24350700	2
24351000	3
24351670	3
24351700	3
24357000	8
24357140	8
24357670	8
24357700	8
24360000	2
24360140	2
24360670	2
24360700	2

Code no.	Number Of Items Per PackingUnit
24370000	9
24370670	9
24370700	9
24371000	9
24371670	9
24371700	9
24372000	9
24372670	9
24372700	9
24373000	9
24373670	9
24373700	9
24380000	8
24380670	6
24380700	8
24381000	8
24381670	8
24381700	8
24382000	2
24382670	2
24382700	2
24383000	2
24383670	2
24383700	2
24400000	12
24400670	12
24400700	12
24401000	16
24401670	16
24401700	16
24403000	5
24403140	5
24403670	5
24403700	5
24404000	8
24404140	8
24404670	8
24404700	8
26	
26014000	22
26014140	20
26014340	20
26014670	20
26014700	20
26014990	20
26077210	24
26079000	4
26089000	4
26089670	4
26090000	24
26093000	8
26094000	8
26095000	8
26096000	8
26097000	4
26097670	4
26098000	4
26099000	4
26099670	4

Code no.	Number Of Items Per PackingUnit
26162007	2
26166007	2
26167007	2
26170007	2
26171007	2
26172007	2
26175007	2
26177007	2
26181007	2
26220000	6
26220140	6
26220340	6
26220670	6
26220700	6
26220990	6
26221000	6
26221140	6
26221340	6
26221670	6
26221700	6
26221990	6
26228000	3
26228140	3
26228340	3
26228670	3
26228700	3
26229000	3
26229670	3
26229700	3
26231000	3
26231140	3
26231340	3
26231670	3
26231700	3
26238000	3
26238140	3
26238340	3
26238670	3
26238700	3
26238990	3
26239000	3
26243000	8
26243700	8
26250000	3
26250140	3
26250340	3
26250670	3
26250700	3
26250990	3
26251000	3
26252000	3
26253000	3
26254180	6
26257000	4
26258000	4
26270000	34
26270670	28
26271000	8
26271670	8

Code no.	Number Of Items Per PackingUnit
26272000	4
26272670	4
26273000	8
26274000	4
26275000	12
26275007	12
26276000	4
26276670	4
26277000	6
26277670	6
26278000	8
26279000	12
26281000	8
26281670	8
26282000	4
26282670	4
26283000	6
26283670	6
26284000	4
26286000	4
26286670	4
26289000	4
26289670	4
26318000	4
26319000	4
26322400	3
26328400	9
26329000	15
26330400	24
26331400	24
26332400	60
26333400	24
26334400	24
26336400	24
26340000	28
26340670	28
26405000	40
26405670	70
26406000	60
26406670	140
26407000	60
26407670	60
26410400	20
26411400	20
26412400	20
26413400	20
26420400	20
26421400	20
26422670	14
26423670	12
26424400	20
26425400	20
26426670	4
26427670	3
26428670	4
26429670	4
26442000	10
26453000	110
26453140	183

Code no.	Number Of Items Per PackingUnit
26453340	183
26453670	110
26453700	183
26453990	110
26455000	110
26455140	110
26455340	110
26455670	110
26455700	110
26455990	110
26456000	10
26456400	10
26457000	168
26457140	168
26457340	110
26457670	110
26457700	168
26457990	168
26464000	10
26465000	7
26466000	6
26467000	6
26469000	6
26471180	10
26472000	6
26481000	6
26505000	12
26506000	6
26511000	24
26511400	24
26511600	24
26515000	20
26516000	15
26519000	38
26520000	25
26520140	20
26520340	20
26520400	25
26520670	20
26520700	20
26520990	20
26521000	25
26521400	24
26522000	10
26524000	10
26524400	10
26528400	10
26530000	20
26530140	20
26530340	20
26530400	20
26530670	20
26530700	20
26530990	20
26531000	25
26531140	20
26531340	20
26531670	20
26531700	20

Packaging units

Please consider the packaging units when placing your order.

Code no.	Number Of Items Per PackingUnit
26531990	20
26532400	12
26533400	12
26534400	12
26535400	12
26536400	10
26537400	10
26538400	4
26539400	10
26550000	28
26550400	28
26551000	30
26551400	28
26553400	12
26555400	16
26560400	12
26561400	12
26562400	12
26563400	12
26564400	12
26565400	12
26566400	12
26567400	20
26568400	20
26569400	20
26570400	10
26571400	10
26572400	10
26573400	10
26574400	10
26575400	4
26580400	12
26581400	12
26582400	12
26583400	10
26584400	12
26586400	12
26590400	10
26591400	10
26592400	10
26593400	10
26594400	10
26595400	10
26600000	3
26601000	6
26604000	4
26605000	4
26620000	16
26620400	12
26621000	10
26621400	10
26622000	12
26622400	12
26623000	10
26623400	10
26626000	8
26626400	8
26630000	12
26630400	16

Code no.	Number Of Items Per PackingUnit
26631000	10
26631400	10
26632000	12
26633000	10
26640540	12
26640560	12
26640670	12
26640700	12
26690400	20
26691400	20
26692400	20
26693400	15
26694400	14
26700000	20
26701000	20
26720000	20
26720400	20
26721000	20
26721400	10
26722000	10
26723000	10
26723670	10
26724000	10
26724670	10
26725000	10
26726000	8
26726670	10
26727000	4
26727670	10
26779007	2
26790000	3
26791000	3
26793000	3
26794000	3
26800400	24
26801400	24
26802400	24
26803400	24
26804400	24
26805400	34
26806400	34
26810400	32
26811400	34
26812400	32
26813400	32
26814140	32
26814340	32
26814400	32
26814670	32
26814700	32
26814990	32
26815340	34
26815400	34
26815670	34
26815700	34
26815990	34
26816400	34
26840180	8
26843000	8

Code no.	Number Of Items Per PackingUnit
26843700	8
26844000	8
26844700	8
26851000	13
26851700	10
26852000	12
26852700	12
26856000	18
26856700	18
26857000	12
26857700	12
26858000	8
26858700	8
26864000	26
26864140	20
26864340	20
26864670	20
26864700	26
26864990	26
26865000	20
26865140	20
26865340	15
26865670	20
26865700	16
26865990	18
26866000	30
26866140	48
26866340	30
26866670	48
26866700	30
26866990	30
26867140	65
26867340	65
26867670	65
26867990	65
26887000	40
26887140	40
26887340	40
26887670	40
26887700	40
26887990	25
26888000	40
26888140	40
26888340	40
26888670	40
26888700	40
26888990	25
26889000	40
26889140	40
26889340	40
26889670	40
26889700	40
26889990	25
26890140	3
26890340	3
26890670	3
26890700	3
26890990	3
26891140	3

Code no.	Number Of Items Per PackingUnit
26891340	3
26891670	3
26891700	3
26891990	3
27	
27013400	7
27014400	4
27032000	6
27033000	3
27034000	7
27035000	3
27036000	2
27036400	2
27037000	2
27037400	2
27038000	2
27038400	2
27039000	2
27039400	2
27081400	7
27082400	4
27085000	5
27086000	8
27114000	3
27116000	3
27129000	3
27129400	3
27133400	3
27185000	3
27188000	3
27222000	3
27224000	3
27247400	3
27248400	3
27267000	3
27268000	3
27269000	3
27270000	3
27271000	3
27281000	3
27284000	3
27289000	3
27337400	6
27340007	2
27341007	2
27342007	2
27344007	2
27345007	2
27355000	20
27356000	16
27370000	4
27371000	4
27375000	4
27376000	4
27378000	6
27378400	6
27380000	4
27381000	4
27388000	7

Code no.	Number Of Items Per PackingUnit
27389000	7
27389140	7
27389340	7
27389670	7
27389700	7
27389990	7
27393000	36
27393140	36
27393340	36
27393670	36
27393700	36
27393990	36
27405000	7
27411000	48
27412000	15
27413000	21
27413140	21
27413340	21
27413670	21
27413700	21
27413990	21
27414000	150
27438000	36
27441000	26
27446000	20
27454000	100
27454140	100
27454340	100
27454670	100
27454700	100
27454990	100
27458000	100
27461000	6
27463000	7
27467000	24
27474000	6
27477000	7
27478000	7
27492000	2
27493000	6
27494000	6
27505000	150
27506000	100
27521000	100
27559000	20
27574000	20
27576000	20
27577000	20
27592000	20
27594000	20
27607000	6
27610000	16
27611000	20
27615000	20
27620000	7
27623000	7
27623670	7
27623700	7
27630000	3

Code no.	Number Of Items Per PackingUnit
27633000	3
27633140	3
27633340	3
27633670	3
27633700	3
27633990	3
27636000	8
27640000	5
27640400	5
27645000	2
27646000	2
27648000	5
27648400	5
27649000	5
27652000	12
27653000	10
27654000	12
27660000	3
27667000	10
27668000	10
27669000	11
27671000	5
27672000	2
27673000	2
27674000	2
27694000	9
27694140	9
27694340	9
27694670	12
27694700	9
27704000	14
27717000	10
27724000	10
27728000	10
27763000	10
27764000	12
27766000	10
27771000	10
27772000	10
27774000	10
27775000	10
27776000	12
27802000	10
27803000	5
27812400	7
27813400	3
27833400	3
27857000	8
27902670	25
27902700	25
27904670	30
27904700	30
27912670	22
27912700	22
27913670	40
27913700	40
27914670	216
27914700	216
27915670	24

Code no.	Number Of Items Per PackingUnit
27915700	24
27916670	170
27916700	170
27917670	120
27917700	120
27921670	24
27921700	24
27925670	105
27925700	105
27926670	30
27926700	30
27927670	6
27927700	6
27928670	28
27928700	28
27929670	216
27929700	216
27951000	2
27953000	2
27957000	2
27958000	2
27959670	2
27966670	2
27966700	2
27967670	8
27967700	8
27968670	3
27968700	3
27969670	6
27969700	6
28	
28010000	5
28010140	6
28010340	6
28010670	6
28010700	5
28010990	6
28016000	8
28020000	5
28020670	5
28020700	5
28021000	7
28071000	200
28072000	1230
28132000	25
28134000	25
28136000	25
28167000	25
28168000	25
28220000	25
28220140	25
28220340	25
28220670	25
28220700	25
28221210	25
28230000	25
28230140	25
28230340	25
28230670	25

Code no.	Number Of Items Per PackingUnit
28230700	25
28230820	25
28230990	25
28248000	25
28249000	25
28250210	25
28260000	25
28260140	25
28260340	25
28260670	25
28260700	25
28260820	25
28260990	25
28262000	50
28266000	50
28272000	25
28272140	25
28272340	25
28272450	25
28272670	25
28272700	25
28272990	25
28274000	25
28276000	25
28276140	25
28276340	25
28276450	25
28276670	25
28276700	25
28276800	25
28276820	34
28276880	25
28276950	25
28276990	25
28321000	200
28324000	100
28328000	72
28331000	100
28331140	105
28331340	105
28331670	105
28331700	105
28331800	105
28331990	105
28346000	180
28387000	60
28387140	105
28387340	105
28387670	105
28387700	105
28387990	105
28423000	68
28466000	48
28496000	10
28535000	20
28536000	20
28536450	24
28537000	24
28538000	24

Code no.	Number Of Items Per PackingUnit
28562000	30
28563000	30
28580000	24
28583000	24
28585000	35
28587000	20
28587400	20
28588000	20
28588400	20
28631000	16
28631140	16
28631340	16
28631670	16
28631700	16
28631990	16
28632000	20
28632140	20
28632340	20
28632670	20
28632700	20
28632990	20
28672000	20
28678000	40
28679000	64
28760210	24
28787640	24
28788570	24
28911210	42
28912210	40
28913210	170
28915210	204
28916210	24
28917210	24
28918210	147
29	
29230000	8
29230670	8
29230700	8
29231000	8
29231670	8
29231700	8
29232000	8
29232140	8
29232340	8
29232670	8
29232700	8
29233000	8
29233140	8
29233340	8
29233670	8
29233700	8
29234000	22
29235180	24
31	
31080000	10
31082000	4
31084000	10
31085000	6
31086000	6

Code no.	Number Of Items Per PackingUnit
31087000	5
31088000	10
31100000	4
31101000	4
31102000	4
31103000	4
31121000	10
31130000	10
31132000	9
31171000	4
31172000	4
31173000	4
31174000	8
31183000	5
31184000	4
31185000	5
31186000	10
31187000	6
31190000	6
31204000	11
31251000	12
31280000	10
31285000	6
31442000	6
31451000	12
31454000	12
31456000	12
31480000	8
31480007	8
31487000	6
31493000	10
31494000	20
31509000	10
31513000	10
31517000	10
31518000	5
31519000	6
31531000	5
31532000	5
31539000	10
31603000	10
31604000	10
31607000	10
31608000	5
31609000	6
31621000	10
31657000	10
31677000	40
31680000	8
31680007	8
31685000	9
31686000	15
31730000	10
31732000	10
31733000	10
31741180	20
31800007	5
31804000	10
31806000	10

Packaging units

Please consider the packaging units when placing your order.

Code no.	Number Of Items Per PackingUnit
31806800	10
31815000	4
31815670	4
31815800	4
31816000	10
31817000	10
31817670	4
31817800	10
31820000	10
31820670	10
31820800	10
31821000	10
31822000	10
31825000	8
31826000	10
31827000	10
31833000	4
31910000	8
31911000	8
31913000	6
31914000	8
31915000	8
31916000	2
31920000	10
31922000	10
31923000	6
31926000	10
31927000	6
31928000	10
31930000	10
31931000	10
31937000	4
31938000	8
31940000	8
31945000	10
31946000	10
31947000	25
31948000	8
31952000	7
31960000	8
31961000	20
31964000	9
31965000	10
31968000	8
32	
32020000	10
32032000	10
32070000	6
32420000	8
32477000	10
32500000	6
32500140	6
32500340	6
32500670	6
32500700	6
32501000	5
32502000	5
32503000	5
32506000	5

Code no.	Number Of Items Per PackingUnit
32507000	5
32507140	5
32507340	5
32507670	5
32507700	5
32507990	5
32508000	5
32511000	6
32511140	6
32511340	6
32511670	6
32511700	6
32511990	6
32512000	4
32512140	4
32512340	4
32512670	4
32512700	4
32512990	4
32514000	4
32515000	7
32515140	4
32515340	9
32515670	9
32515700	9
32515990	9
32520140	7
32520340	7
32520670	7
32520700	7
32520990	7
32522000	4
32525000	6
32526000	9
32526140	8
32526340	7
32526670	9
32526700	9
32526990	10
32540000	6
32540140	8
32540340	6
32540670	8
32540700	6
32540990	10
32542000	20
32543000	5
32543140	7
32543340	7
32543670	7
32543700	7
32543990	7
32545000	10
32545140	10
32545340	10
32545670	10
32545700	10
32545990	10
32546000	6

Code no.	Number Of Items Per PackingUnit
32546140	6
32546340	6
32546670	6
32546700	6
32548000	30
32550000	6
32551000	6
32552000	6
32553000	6
32560000	6
32560140	10
32560340	10
32560670	10
32560990	10
32565000	6
32565140	10
32565340	10
32565670	10
32565700	10
32565990	10
32570000	5
32571000	5
32572000	4
32675000	10
32841000	9
40	
40089000	22
40418000	15
40418800	15
40438000	15
40438340	15
40438670	15
40438800	15
40448000	15
40448670	15
40448800	15
40468000	15
40468670	15
40468800	15
40952800	90
40953800	100
40961000	7
40962800	6
40963000	3
41	
41710000	30
41711000	200
41712000	18
41713000	30
41714000	30
41715000	30
41716000	25
41717000	24
41718000	40
41720000	4
41722000	6
41723000	30
41724000	9
41725000	75

Code no.	Number Of Items Per PackingUnit
41726000	75
41727000	3
41728000	2
43	
43922800	4
43927000	10
43928000	4
43937000	10
43938000	6
43961807	15
43962807	15
50	
50001000	80
50001140	105
50001670	105
50100000	30
50100140	100
50100340	70
50100670	100
50100700	100
50100990	70
50105000	100
50107000	12
52	
52010000	30
52053000	30
52100000	18
52105000	30
52105140	24
52105340	24
52105670	18
52105700	24
52105990	24
52120000	20
53	
53002000	25
53010000	25
53428000	50
53428670	23
53493000	110
53646000	14
53971000	300
53990000	100
55	
55237000	25
56	
56010180	2
56011180	2
56012180	2
56013180	2
56014180	2
56015180	2
56019180	2
56029000	8
56030000	8
56031000	8
56032000	8
56033000	8
56034000	2

Code no.	Number Of Items Per PackingUnit
56036000	8
56036450	8
56036610	8
56036670	8
56036700	8
56036800	8
56037000	8
56037450	8
56037610	8
56037670	8
56037700	8
56037800	8
56038000	8
56038450	8
56038610	8
56038670	8
56038700	8
56038800	8
56040000	8
56040450	8
56040610	8
56040670	8
56040700	8
56040800	8
56041000	4
56041450	8
56041610	8
56041670	8
56041700	8
56041800	8
56042000	2
56042450	2
56042610	2
56042670	2
56042700	2
56042800	2
56043000	8
56043140	8
56043340	8
56043670	8
56043700	8
56043800	8
56043990	8
56044000	8
56044140	8
56044340	8
56044670	8
56044700	8
56044800	8
56044990	8
56045000	8
56045140	8
56045340	8
56045670	8
56045700	8
56045800	8
56045990	8
56046000	8
56046140	8

Packaging units

Please consider the packaging units when placing your order.

Code no.	Number Of Items Per PackingUnit
56046340	8
56046670	8
56046700	8
56046800	8
56046990	8
56047000	2
56047140	2
56047340	2
56047670	2
56047700	2
56047800	2
56047990	2
56050000	8
56050140	8
56050340	8
56050670	8
56050700	8
56050800	8
56050990	8
56051000	8
56051140	8
56051340	8
56051670	8
56051700	8
56051800	8
56051990	8
56052000	8
56052140	8
56052340	8
56052670	8
56052700	8
56052800	8
56052990	8
56053000	8
56053140	8
56053340	8
56053670	8
56053700	8
56053800	8
56053990	8
56054000	2
56054140	2
56054340	2
56054670	2
56054700	2
56054800	2
56054990	2
56055800	3
56056000	8
56057380	3
56057670	3
56057700	3
56061380	3
56061670	3
56061700	3
56064380	2
56064670	2
56064700	2
56065670	2
56065700	2
56065800	2
56067670	2
56067700	2
56070670	3
56070700	3
56070800	3
56073670	3
56073700	3
56073800	3
56076670	2
56076700	2
56076800	2
56079670	2
56079700	2
56079800	2
56082670	3
56082700	3
56082800	3
56085670	3
56085700	3
56085800	3
56088670	2
56088700	2
56088800	2
56091670	2
56091700	3
56091800	2
56092380	3
56092670	3
56092700	3
56093380	4
56093670	4
56093700	4
56094140	3
56094340	3
56094670	3
56094700	3
56094800	3
56094990	3
56095140	3
56095340	3
56095670	3
56095700	3
56095800	3
56095990	3
56096140	3
56096340	3
56096670	3
56096700	3
56096800	3
56096990	3
56097140	3
56097340	3
56097670	3
56097700	3
56097800	3
56097990	3
56098140	3
56098340	3
56098670	3
56098700	3
56098800	3
56098990	3
56099140	3
56099340	3
56099670	3
56099700	3
56099800	3
56099990	3
56100800	3
56112800	7
56373000	36
58	
58112000	12
58113000	13
58115180	13
58116180	10
58117000	50
58117340	36
58117670	36
58117700	36
58117820	50
58117990	36
58123000	13
58125180	13
58126180	10
58127000	50
58128000	36
58141180	10
58143000	13
58150000	13
58185000	100
58185670	80
58185990	100
58186000	80
58192000	20
60	
60056000	20
60067000	14
71	
71070000	13
71071000	13
71072000	13
71073000	10
71075000	13
71076000	13
71077000	13
71078000	13
71090000	5
71091000	5
71095000	5
71100000	13
71101000	13
71102000	13
71103000	13
71104000	13
71105000	13
71107000	13
71120000	13
71130000	6
71131000	6
71133000	4
71170000	13
71171000	13
71201000	28
71203000	13
71204000	13
71220000	6
71221000	4
71222000	4
71225000	8
71251000	6
71252000	5
71253000	28
71254000	5
71255000	5
71256000	8
71257000	4
71258000	4
71286000	6
71290000	10
71310000	5
71311000	12
71312000	12
71313000	5
71314000	9
71315000	12
71400000	8
71401000	8
71402000	5
71405000	10
71406000	15
71409000	12
71410000	20
71430000	8
71449007	14
71455007	14
71458007	14
71465187	32
71577187	32
71600000	8
71604000	15
71605000	10
71606000	20
71666000	9
71700000	10
71701000	10
71702000	10
71703000	10
71704000	10
71705000	10
71706000	10
71710000	10
71710140	10
71710340	10
71710670	10
71710700	10
71710990	10
71711000	10
71712000	10
71712140	10
71712340	10
71712670	10
71712700	10
71712990	10
71713000	10
71713140	10
71713340	10
71713670	10
71713700	10
71713990	10
71714000	10
71714140	10
71714340	10
71714670	10
71714700	10
71714990	10
71715000	10
71716000	4
71716140	5
71716340	5
71716670	5
71716700	5
71716990	5
71717000	5
71717140	5
71717340	5
71717670	5
71717700	5
71717990	5
71718000	6
71719000	10
71720140	15
71720340	15
71720670	15
71720700	15
71720990	15
71721000	10
71729000	7
71730000	2
71731000	5
71732000	6
71733000	4
71733140	4
71733670	4
71734000	6
71734140	6
71734340	6
71734670	6
71734700	6
71740000	8
71740140	6
71740340	6
71740670	6
71740700	6

Packaging units

Please consider the packaging units when placing your order.

Code no.	Number Of Items Per PackingUnit
71740990	6
71745000	10
71745140	9
71745340	9
71745670	10
71745700	10
71745990	10
71746000	10
71747000	5
71748000	6
71748140	3
71748670	5
71750000	10
71751000	10
71752000	5
71753000	10
71754000	6
71754140	2
71754340	2
71754670	5
71754700	5
71754990	2
71755000	5
71760000	8
71760140	6
71760340	6
71760670	6
71760700	6
71760990	6
71764000	20
71765000	10
71765140	10
71765340	10
71765670	10
71765700	10
71765990	10
71766000	20
71768000	10
71800000	4
71801000	4
71801800	4
71802000	4
71804000	10
71805000	10
71806000	10
71806800	10
71807000	4
71808000	6
71809000	6
71814000	10
71814800	10
71820000	6
71829000	3
71829800	3
71830000	10
71831000	10
71832000	10
71833000	4
71835000	10

Code no.	Number Of Items Per PackingUnit
71836000	10
71837000	10
71839000	10
71861000	4
71864000	10
71870000	5
71870670	5
71871000	5
71871670	5
71970000	50
72	
72010000	10
72011000	10
72012000	10
72013000	10
72014000	10
72017000	10
72020000	10
72021000	10
72022000	10
72023000	10
72031000	5
72032000	8
72040000	10
72041000	10
72042000	10
72043000	10
72044000	7
72045000	5
72105000	6
72110000	8
72111000	9
72113000	5
72116000	6
72200000	10
72215000	4
72215670	4
72290000	6
72400000	8
72405000	9
72410000	20
72416000	6
72417000	5
72419000	6
72430000	18
72430670	18
72431000	18
72431670	18
72440000	6
72440670	6
72444007	4
72444677	4
72448000	10
72448670	10
72449000	24
72449670	24
72450000	6
72450670	6
72454007	4

Code no.	Number Of Items Per PackingUnit
72454677	4
72458000	10
72458670	10
72459000	24
72459670	24
72466000	9
72466670	9
72468000	9
72468670	9
72503000	10
72503670	10
72506000	10
72506670	10
72510000	10
72513000	10
72513670	10
72514000	10
72517000	7
72517007	28
72517670	7
72517677	28
72519000	7
72519670	7
72520000	7
72520670	7
72523007	5
72523677	5
72527000	14
72527670	7
72528000	10
72528670	10
72530000	4
72536000	2
72536670	2
72550000	10
72551000	7
72551670	14
72553000	10
72553670	10
72554000	10
72554670	10
72557000	7
72557670	7
72559000	7
72559007	28
72559670	7
72559677	28
72560000	7
72560670	7
72563007	5
72563677	5
72568000	10
72568670	10
72576000	2
72576670	2
72580000	5
72580670	5
72581000	5
72581670	5

Code no.	Number Of Items Per PackingUnit
72582000	5
72583000	5
72584000	10
72584670	10
72585000	10
72585670	10
72586000	10
72586670	10
72587000	10
72587670	10
72588000	5
72588670	6
72589000	6
72589670	6
72591000	10
72600000	8
72605000	12
72606000	20
72640000	6
72640670	6
72648000	10
72648670	10
72649000	24
72649670	24
72650000	6
72650670	6
72658000	10
72658670	10
72659000	24
72659670	24
72667000	9
72667670	9
72668000	9
72668670	9
72800000	4
72800340	4
72800670	4
72800800	9
72801000	3
72801340	5
72801670	3
72801800	3
72802000	4
72802670	9
72802800	9
72803000	3
72803670	3
72803800	3
72804000	9
72804670	9
72804800	9
72806000	9
72806670	9
72806800	9
72808000	4
72808340	4
72808670	9
72808800	9
72809000	3

Code no.	Number Of Items Per PackingUnit
72809340	5
72809670	3
72809800	3
72810000	4
72810800	4
72813000	4
72813800	4
72814000	4
72814800	9
72815000	9
72815800	9
72820000	4
72820800	4
72821000	4
72821800	4
72822800	8
72823000	3
72823800	3
72824000	4
72840000	9
72840340	4
72840670	9
72840800	9
72841000	16
72841670	16
72841800	16
72842000	4
72842670	9
72843000	4
72843670	4
72844000	4
72844670	9
72845000	4
72845670	9
73	
73001000	6
73001140	6
73001670	6
73001700	6
73002000	6
73002140	6
73002670	6
73002700	6
73004000	6
73004140	6
73004670	6
73004700	6
73012000	6
73012140	6
73012670	6
73012700	6
73014000	6
73014140	6
73014670	6
73014700	6
73016000	6
73016140	6
73016670	6
73016700	6

Packaging units

Please consider the packaging units when placing your order.

Code no.	Number Of Items Per PackingUnit
73018000	6
73018140	6
73018670	6
73018700	6
73024000	6
73024140	6
73024670	6
73024700	6
73042000	6
73042140	6
73042670	6
73042700	6
73053000	8
73053140	8
73053670	8
73053700	8
73063000	6
73063140	6
73063670	6
73063700	6
73073000	6
73073140	6
73073670	6
73073700	6
73200000	6
73200140	6
73200670	6
73200700	6
73201000	7
73201140	7
73201670	7
73201700	7
73210000	5
73210670	5
73211000	4
73211670	4
73305000	6
73305140	6
73305670	6
73305700	6
73310000	6
73310140	6
73310670	6
73310700	6
73311000	7
73311140	7
73311670	7
73311700	7
73312000	13
73314000	6
73314007	28
73314140	6
73314670	6
73317000	7
73317140	7
73317670	7
73317700	7
73318000	7
73318140	7

Code no.	Number Of Items Per PackingUnit
73318670	7
73318700	7
73320007	9
73322000	2
73322140	2
73322670	2
73322700	2
73342000	2
73342140	2
73342670	2
73342700	2
73351000	10
73351140	10
73351670	10
73360000	2
73364000	2
73364140	2
73364670	2
73364700	2
73370000	5
73370007	9
73370140	5
73370670	5
73373000	2
73373140	2
73373670	2
73373700	2
73561000	9
73800000	6
73800800	6
73801000	6
73801800	6
73802000	6
73802800	4
73803000	6
73804000	5
73804800	6
73812000	4
73812800	6
73816000	3
73816800	2
73817000	3
73817800	3
73818000	4
73818340	3
73818670	3
73820000	3
73822000	4
73850000	6
73851000	6
73851800	6
73852000	6
73852800	6
73853000	6
73853800	5
73867000	3
73880000	4
73880800	3
74	

Code no.	Number Of Items Per PackingUnit
74500000	5
74502000	5
74506000	5
74507000	5
74511000	5
74512000	4
74515000	9
74520000	5
74522000	8
74525000	6
74526000	6
74540000	8
74545000	10
74550000	6
74551000	6
74552000	6
74560000	8
74565000	10
74800000	4
74800670	4
74800800	4
74801000	4
74801670	4
74801800	4
74802000	4
74802670	4
74802800	4
74803000	4
74803670	4
74803800	4
74804000	4
74804670	4
74804800	4
74805000	4
74810000	4
74811000	4
74813000	4
75	
75010000	5
75010670	5
75010700	5
75012000	5
75012670	5
75012700	5
75013000	5
75013670	5
75013700	5
75020000	5
75020670	5
75020700	5
75022000	5
75022670	5
75022700	5
75023000	5
75023670	5
75023700	5
75024000	5
75024670	5
75024700	5

Code no.	Number Of Items Per PackingUnit
75030000	2
75030670	2
75030700	2
75032000	2
75032670	2
75032700	2
75033000	4
75040000	4
75040670	4
75040700	4
75042000	3
75042670	3
75042700	4
75050000	6
75050670	6
75050700	6
75200000	5
75200670	5
75200700	5
75410000	20
75410670	20
75410700	20
75415000	6
75415670	6
75415700	6
75420000	2
75420670	2
75420700	2
75444670	3
75615000	6
75615670	6
75615700	6
75617000	8
75618000	8
75620000	8
75620670	8
75620700	8
76	
76010000	5
76010670	5
76010700	5
76013000	5
76013670	5
76013700	5
76020000	5
76020670	5
76020700	5
76023000	5
76023670	5
76023700	5
76024000	5
76024670	5
76024700	5
76050000	6
76050670	6
76050700	6
76051000	6
76051670	6
76051700	6

Code no.	Number Of Items Per PackingUnit
76060000	2
76060670	2
76060700	2
76063000	2
76063670	2
76063700	2
76070000	3
76070670	3
76070700	3
76200000	5
76200670	5
76200700	5
76410000	20
76410670	20
76410700	20
76415000	6
76415670	6
76415700	6
76420000	2
76420670	2
76420700	2
76615000	6
76615670	6
76615700	6
76620000	4
76620670	8
76620700	8
92	
92601000	50
92631000	30
92646000	197
92730000	100
93	
93500000	32
94	
94008000	135
94009000	120
94108000	7
94139000	20
94139140	20
94139340	20
94148000	25
94149000	200
94246000	800
94282000	80
95	
95014000	80
95093000	36
95239000	100
95282000	200
95455000	150
95758000	100
96	
96026000	80
96083000	50
96100000	1000
96153000	96
96170000	50
96189000	160

Packaging units

Please consider the packaging units when placing your order.

Code no.	Number Of Items Per PackingUnit
96190000	50
96339000	56
96370000	100
96454000	300
96507000	100
96509000	83
96615000	27
96618000	160
96633000	72
96783000	50
97	
97204000	100
97205000	200
97206000	90
97651000	50
97685000	96
97999000	40
98	
98127000	200
98189000	100
98282000	60
98283000	96
98520000	40
98702000	100
98753000	50
98996000	500

brand	Code no.	EAN	page
01			
HG	01000180	4059625350867	254
HG	01001180	4059625350850	254
HG	01002180	4059625350836	255
HG	01500180	4059625316900	340
HG	01800180	4011097347240	345
HG	01850180	4011097677545	345
02			
HG	02024000	4011097100005	144
06			
HG	06010000	4011097100135	277
10			
AX	10452180	4011097254104	353
13			
HG	13085000	4011097102184	753
HG	13111400	4011097753928	286
HG	13114000	4011097678832	289
HG	13114140	4059625229774	289
HG	13114340	4059625229781	289
HG	13114670	4059625229798	289
HG	13114700	4059625229804	289
HG	13114990	4059625229811	289
HG	13116000	4011097678856	288
HG	13116140	4059625229828	288
HG	13116340	4059625229835	288
HG	13116670	4059625229842	288
HG	13116700	4059625229859	288
HG	13116990	4059625229866	288
HG	13117000	4011097678863	289
HG	13122000	4011097739205	290
HG	13123000	4011097739229	290
HG	13132000	4011097526058	462
HG	13141000	4011097661308	287
HG	13141400	4011097666402	287
HG	13151000	4011097717036	284
HG	13151400	4011097717029	284
HG	13159180	4011097835310	354
HG	13161000	4011097661315	286
HG	13161400	4011097665696	286
HG	13171000	4011097717012	283
HG	13171400	4011097717005	283
HG	13183000	4011097771021	284
HG	13184000	4011097771083	283
HG	13184400	4011097771076	283
HG	13201000	4011097799599	291
HG	13211000	4011097799582	291
HG	13233180	4011097629407	354
HG	13244180	4011097629414	355
HG	13414000	4011097532509	464
HG	13423000	4011097603766	464
HG	13424000	4011097594774	464
HG	13437180	4011097660837	355
HG	13439180	4011097734033	354
HG	13440180	4059625321218	355
HG	13444180	4011097140841	356
HG	13481180	4059625479285	350
HG	13560180	4059625202968	350
HG	13588000	4059625477359	340
HG	13593000	4011097745015	347
HG	13593140	4059625346716	347
HG	13593340	4059625346723	347

brand	Code no.	EAN	page
HG	13593670	4059625346693	347
HG	13593700	4059625346709	347
HG	13593990	4059625346730	347
HG	13595000	4011097333670	346
HG	13597000	4011097564739	348
HG	13597140	4059625250075	348
HG	13597340	4059625346839	348
HG	13597670	4059625346815	348
HG	13597700	4059625346822	348
HG	13601000	4011097783727	348
HG	13604000	4011097825915	347
HG	13612000	4059625464632	342
HG	13612140	4059625464625	342
HG	13612340	4059625464618	342
HG	13612670	4059625464601	342
HG	13612700	4059625464595	342
HG	13613000	4059625464571	342
HG	13613140	4059625464564	342
HG	13613340	4059625464557	342
HG	13613670	4059625464540	342
HG	13613700	4059625464533	342
HG	13614000	4059625464519	343
HG	13614140	4059625464502	343
HG	13614340	4059625464496	343
HG	13614670	4059625464489	343
HG	13614700	4059625464472	343
HG	13617000	4059625464458	342
HG	13617140	4059625464441	342
HG	13617340	4059625464434	342
HG	13617670	4059625464427	342
HG	13617700	4059625464410	342
HG	13618000	4059625464397	343
HG	13618140	4059625464380	343
HG	13618340	4059625464373	343
HG	13618670	4059625464366	343
HG	13618700	4059625464359	343
HG	13620180	4011097228747	357
HG	13622180	4011097625386	352
HG	13622187	4059625079591	352
HG	13624000	4059625464335	344
HG	13624140	4059625464328	344
HG	13624340	4059625464311	344
HG	13624670	4059625464304	344
HG	13624700	4059625464298	344
HG	13628000	4059625464274	343
HG	13631000	4059625464267	344
HG	13632000	4059625464250	341
HG	13637000	4059625534090	341
HG	13638000	4059625536209	341
HG	13901000	4011097537122	273
HG	13902000	4011097537139	272
HG	13903000	4011097646411	273
HG	13904000	4011097666778	272
HG	13913000	4011097413754	754
HG	13950000	4011097350721	271
HG	13950140	4011097957050	271
HG	13950340	4059625266151	271
HG	13950670	4059625266137	271
HG	13950700	4059625266144	271
HG	13950990	4011097957128	271
HG	13952000	4011097105932	752

Code Numbers (HG = hansgrohe, AX = AXOR)

brand	Code no.	EAN	page
HG	13954000	4011097360393	271
HG	13954820	4011097525532	271
HG	13964000	4011097105970	752
HG	13970000	4011097105994	757
HG	13971000	4011097178578	758
14			
HG	14095000	4011097165103	751
HG	14096000	4011097176222	751
HG	14495000	4011097255705	465
HG	14780000	4059625195970	662
HG	14781000	4059625197110	663
HG	14782000	4059625198100	664
HG	14785000	4059625197998	661
HG	14786000	4059625195994	660
HG	14806000	4011097732992	678
HG	14820000	4011097718378	662
HG	14820800	4011097718361	662
HG	14821000	4011097718354	663
HG	14821800	4011097718347	663
HG	14822000	4011097718170	663
HG	14822800	4011097718330	663
HG	14823000	4011097718323	664
HG	14834000	4011097823690	662
HG	14834800	4011097823683	662
HG	14847000	4011097823676	661
HG	14847800	4011097823669	661
HG	14857000	4011097823652	660
HG	14857800	4011097823645	660
HG	14883000	4011097748559	661
HG	14883800	4011097748566	661
HG	14884000	4011097772783	660
HG	14884800	4011097772790	660
15			
HG	15310180	4011097815602	362
HG	15311180	4059625034057	362
HG	15312180	4059625034040	362
HG	15313180	4059625034033	362
HG	15346000	4011097727219	292
HG	15355000	4059625034019	301
HG	15355400	4011097815619	301
HG	15355600	4059625034002	301
HG	15356000	4059625033999	301
HG	15356400	4059625033982	301
HG	15356600	4059625033975	301
HG	15357000	4059625033968	302
HG	15357400	4059625033951	302
HG	15357600	4059625033944	302
HG	15358000	4059625033937	302
HG	15358400	4059625033920	302
HG	15358600	4059625033913	302
HG	15380000	4059625201350	299
HG	15380140	4059625241707	299
HG	15380340	4059625241691	299
HG	15380670	4059625241684	299
HG	15380700	4059625201336	299
HG	15380990	4059625241677	299
HG	15381000	4059625201312	299
HG	15381140	4059625489130	299
HG	15381340	4059625489123	299
HG	15381670	4059625489116	299
HG	15381700	4059625201299	299

brand	Code no.	EAN	page
HG	15381990	4059625489109	299
HG	15382000	4059625201275	300
HG	15382140	4059625241967	300
HG	15382340	4059625241974	300
HG	15382670	4059625241981	300
HG	15382700	4059625201251	300
HG	15382990	4059625241998	300
HG	15384000	4059625201237	300
HG	15384140	4059625489093	300
HG	15384340	4059625489086	300
HG	15384670	4059625489079	300
HG	15384700	4059625201213	300
HG	15384990	4059625489062	300
HG	15553000	4059625464878	303
HG	15553140	4059625464854	303
HG	15553340	4059625464830	303
HG	15553670	4059625465165	303
HG	15553700	4059625465141	303
HG	15554000	4059625465127	304
HG	15554140	4059625465097	304
HG	15554340	4059625465073	304
HG	15554670	4059625465059	304
HG	15554700	4059625465028	304
HG	15558000	4059625465349	307
HG	15558140	4059625465325	307
HG	15558340	4059625465301	307
HG	15558670	4059625465288	307
HG	15558700	4059625465264	307
HG	15559000	4059625465240	305
HG	15559140	4059625465226	305
HG	15559340	4059625465202	305
HG	15559670	4059625465189	305
HG	15559700	4059625465561	305
HG	15562000	4059625465547	306
HG	15562140	4059625465523	306
HG	15562340	4059625465509	306
HG	15562670	4059625465486	306
HG	15562700	4059625465462	306
HG	15571000	4059625465448	308
HG	15571140	4059625465417	308
HG	15571340	4059625465387	308
HG	15571670	4059625465752	308
HG	15571700	4059625465721	308
HG	15572000	4059625465684	309
HG	15572140	4059625465653	309
HG	15572340	4059625465622	309
HG	15572670	4059625465592	309
HG	15572700	4059625465967	309
HG	15573000	4059625465929	312
HG	15573140	4059625465899	312
HG	15573340	4059625465868	312
HG	15573670	4059625465837	312
HG	15573700	4059625465806	312
HG	15574000	4059625466162	310
HG	15574140	4059625466131	310
HG	15574340	4059625466100	310
HG	15574670	4059625466070	310
HG	15574700	4059625466049	310
HG	15575000	4059625466001	311
HG	15575140	4059625465974	311
HG	15575340	4059625466346	311

brand	Code no.	EAN	page
HG	15575670	4059625466315	311
HG	15575700	4059625466285	311
HG	15581000	4059625466193	313
HG	15581140	4059625466179	313
HG	15581340	4059625466766	313
HG	15581670	4059625466759	313
HG	15581700	4059625466735	313
HG	15583000	4059625466711	314
HG	15583140	4059625466698	314
HG	15583340	4059625466681	314
HG	15583670	4059625466674	314
HG	15583700	4059625466650	314
HG	15587000	4059625466582	316
HG	15587140	4059625466568	316
HG	15587340	4059625466551	316
HG	15587670	4059625466544	316
HG	15587700	4059625466520	316
HG	15588000	4059625466506	314
HG	15588140	4059625466483	314
HG	15588340	4059625466476	314
HG	15588670	4059625466469	314
HG	15588700	4059625466445	314
HG	15589000	4059625466421	315
HG	15589140	4059625466407	315
HG	15589340	4059625466391	315
HG	15589670	4059625466384	315
HG	15589700	4059625467145	315
HG	15705000	4011097741727	334
HG	15706000	4011097741710	335
HG	15707000	4011097741703	334
HG	15708000	4011097741697	334
HG	15712000	4059625028728	333
HG	15714000	4059625028735	333
HG	15714140	4059625230244	333
HG	15714340	4059625230251	333
HG	15714670	4059625230268	333
HG	15714700	4059625230275	333
HG	15714990	4059625230282	333
HG	15734400	4011097777528	317
HG	15735400	4011097777511	318
HG	15736400	4011097777504	318
HG	15737400	4011097777498	317
HG	15738400	4011097777481	317
HG	15741000	4011097741369	325
HG	15742000	4011097741352	326
HG	15743000	4011097741345	325
HG	15743140	4059625142424	325
HG	15743340	4059625244548	325
HG	15743670	4059625266069	325
HG	15743700	4059625266076	325
HG	15743990	4059625266083	325
HG	15744000	4011097741338	325
HG	15745000	4011097741321	327
HG	15747000	4011097746388	327
HG	15748000	4011097749631	327
HG	15755000	4011097741680	331
HG	15756000	4011097741673	330
HG	15757000	4011097741666	330
HG	15758000	4011097741659	330
HG	15758140	4059625155028	330
HG	15758340	4059625216682	330

brand	Code no.	EAN	page
HG	15758670	4059625266038	330
HG	15758700	4059625266045	330
HG	15758990	4059625266052	330
HG	15760000	4011097719870	322
HG	15760140	4059625355893	322
HG	15760340	4059625355879	322
HG	15760670	4059625355855	322
HG	15760700	4059625355831	322
HG	15760990	4059625355817	322
HG	15761000	4011097719863	323
HG	15762000	4011097719856	320
HG	15763000	4011097719849	320
HG	15763140	4059625230299	320
HG	15763340	4059625230909	320
HG	15763670	4059625230916	320
HG	15763700	4059625230923	320
HG	15763990	4059625230930	320
HG	15764000	4011097719832	323
HG	15764140	4059625355794	323
HG	15764340	4059625355770	323
HG	15764670	4059625355756	323
HG	15764700	4059625355732	323
HG	15764990	4059625355718	323
HG	15765000	4011097719825	321
HG	15767000	4011097746364	324
HG	15768000	4011097749624	324
HG	15773000	4059625196076	287
HG	15774000	4059625196069	288
HG	15930180	4011097345239	359
HG	15932000	4011097487984	331
HG	15956000	4011097629360	346
HG	15970180	4011097345208	361
HG	15972000	4011097487960	332
HG	15973180	4011097345215	360
HG	15974180	4011097345222	361
HG	15981180	4011097415772	358
22			
HG	22413007	4059625300206	596
HG	22414007	4059625300213	596
HG	22415007	4059625300220	596
HG	22421007	4059625300268	598
HG	22422007	4059625300275	598
HG	22423007	4059625384848	603
HG	22424007	4059625384831	602
HG	22425007	4059625384824	600
HG	22426007	4059625384817	600
HG	22427007	4059625384800	601
HG	22428007	4059625379325	601
HG	22429007	4059625384695	603
HG	22430007	4059625384688	602
HG	22437007	4059625384961	607
HG	22438007	4059625384954	606
HG	22439007	4059625384947	606
HG	22440007	4059625384930	606
HG	22441007	4059625384923	608
HG	22443007	4059625384916	607
HG	22444007	4059625384909	607
24			
HG	24001400	4011097772219	155
HG	24001600	4011097983165	155
HG	24002400	4011097771182	157

Code Numbers (HG = hansgrohe, AX = AXOR)

brand	Code no.	EAN	page
HG	24003400	4011097771243	156
HG	24003600	4011097983066	156
HG	24004400	4011097771304	157
HG	24005400	4011097771366	156
HG	24005600	4011097983103	156
HG	24006400	4011097771380	157
HG	24006600	4011097983127	157
HG	24007400	4011097771397	156
HG	24010180	4011097771175	363
HG	24011400	4011097772226	155
HG	24012400	4011097771151	157
HG	24013400	4011097771229	156
HG	24014400	4011097771281	157
HG	24016400	4011097772202	157
HG	24017400	4011097772332	156
HG	24100000	4059625315897	74
HG	24100670	4059625316016	74
HG	24100700	4059625316009	74
HG	24101000	4059625320556	74
HG	24101670	4059625320570	74
HG	24101700	4059625320563	74
HG	24110000	4059625310915	74
HG	24110140	4059625442647	74
HG	24110670	4059625313046	74
HG	24110700	4059625313039	74
HG	24111000	4059625310922	74
HG	24111140	4059625442654	74
HG	24111670	4059625338773	74
HG	24111700	4059625338766	74
HG	24120000	4059625316023	74
HG	24120670	4059625316047	74
HG	24120700	4059625316030	74
HG	24121000	4059625320587	74
HG	24121670	4059625320600	74
HG	24121700	4059625320594	74
HG	24125000	4059625468043	75
HG	24125140	4059625468012	75
HG	24125670	4059625468005	75
HG	24125700	4059625467978	75
HG	24126000	4059625467947	74
HG	24126140	4059625467923	74
HG	24126670	4059625467916	74
HG	24126700	4059625467893	74
HG	24130000	4059625313718	171
HG	24130140	4059625442661	171
HG	24130670	4059625313732	171
HG	24130700	4059625313725	171
HG	24132000	4059625316894	170
HG	24132670	4059625317013	170
HG	24132700	4059625317006	170
HG	24139000	4059625340974	186
HG	24139140	4059625448298	186
HG	24139670	4059625340998	186
HG	24139700	4059625340981	186
HG	24140000	4059625340073	170
HG	24140140	4059625453377	170
HG	24140670	4059625340097	170
HG	24140700	4059625340080	170
HG	24141000	4059625340707	170
HG	24141140	4059625453384	170
HG	24141670	4059625340721	170
HG	24141700	4059625340714	170
HG	24149000	4059625341063	186
HG	24149140	4059625453391	186
HG	24149670	4059625341087	186
HG	24149700	4059625341070	186
HG	24150000	4059625340851	169
HG	24150670	4059625340875	169
HG	24150700	4059625340868	169
HG	24151000	4059625340882	169
HG	24151670	4059625340905	169
HG	24151700	4059625340899	169
HG	24160000	4059625348048	95
HG	24160670	4059625358214	95
HG	24160700	4059625358221	95
HG	24161000	4059625348031	95
HG	24161670	4059625358238	95
HG	24161700	4059625358245	95
HG	24170000	4059625348024	95
HG	24170670	4059625358252	95
HG	24170700	4059625358269	95
HG	24171000	4059625348017	95
HG	24171670	4059625358276	95
HG	24171700	4059625358283	95
HG	24220000	4059625358375	209
HG	24220140	4059625467879	209
HG	24220670	4059625411193	209
HG	24220700	4059625411186	209
HG	24221000	4059625358290	209
HG	24221140	4059625467862	209
HG	24221670	4059625411179	209
HG	24221700	4059625411148	209
HG	24230000	4059625358306	210
HG	24231007	4059625367223	210
HG	24231677	4059625411117	210
HG	24231707	4059625411100	210
HG	24240000	4059625358313	208
HG	24240140	4059625467855	208
HG	24240670	4059625358320	208
HG	24240700	4059625358337	208
HG	24241000	4059625358344	208
HG	24241140	4059625467848	208
HG	24241670	4059625358351	208
HG	24241700	4059625358368	208
HG	24250670	4059625368251	584
HG	24250700	4059625368244	584
HG	24260000	4059625368268	108
HG	24270000	4059625368275	108
HG	24291670	4059625368299	584
HG	24291700	4059625368282	584
HG	24301000	4059625347928	129
HG	24301670	4059625358382	129
HG	24301700	4059625358399	129
HG	24302000	4059625347911	129
HG	24302670	4059625358405	129
HG	24302700	4059625358412	129
HG	24303000	4059625347904	129
HG	24303670	4059625358429	129
HG	24303700	4059625358436	129
HG	24320000	4059625415375	75
HG	24320140	4059625418710	75
HG	24320670	4059625415368	75

brand	Code no.	EAN	page
HG	24320700	4059625415351	75
HG	24321000	4059625415344	75
HG	24321140	4059625418727	75
HG	24321670	4059625414491	75
HG	24321700	4059625414972	75
HG	24330000	4059625411094	172
HG	24330140	4059625467831	172
HG	24330670	4059625411087	172
HG	24330700	4059625411070	172
HG	24331000	4059625411063	172
HG	24331140	4059625467824	172
HG	24331670	4059625411025	172
HG	24331700	4059625410981	172
HG	24333000	4059625467800	172
HG	24333140	4059625467794	172
HG	24333670	4059625467787	172
HG	24333700	4059625467770	172
HG	24337000	4059625395264	186
HG	24337140	4059625467763	186
HG	24337670	4059625395271	186
HG	24337700	4059625395288	186
HG	24338000	4059625410790	190
HG	24338140	4059625467749	190
HG	24338670	4059625410769	190
HG	24338700	4059625410738	190
HG	24339000	4059625410707	190
HG	24339140	4059625467725	190
HG	24339670	4059625410677	190
HG	24339700	4059625410646	190
HG	24340000	4059625358443	285
HG	24340140	4059625467718	285
HG	24340670	4059625358450	285
HG	24340700	4059625358467	285
HG	24350000	4059625410615	171
HG	24350670	4059625410608	171
HG	24350700	4059625410592	171
HG	24351000	4059625410585	171
HG	24351670	4059625410561	171
HG	24351700	4059625410547	171
HG	24357000	4059625459331	187
HG	24357140	4059625459362	187
HG	24357670	4059625459355	187
HG	24357700	4059625459348	187
HG	24360000	4059625358474	284
HG	24360140	4059625467701	284
HG	24360670	4059625358481	284
HG	24360700	4059625358498	284
HG	24370000	4059625445211	96
HG	24370670	4059625445235	96
HG	24370700	4059625445228	96
HG	24371000	4059625445259	96
HG	24371670	4059625445273	96
HG	24371700	4059625445266	96
HG	24372000	4059625460931	94
HG	24372670	4059625460917	94
HG	24372700	4059625460894	94
HG	24373000	4059625460870	94
HG	24373670	4059625460849	94
HG	24373700	4059625460818	94
HG	24380000	4059625444603	96
HG	24380670	4059625444610	96

brand	Code no.	EAN	page
HG	24380700	4059625445242	96
HG	24381000	4059625445280	96
HG	24381670	4059625445303	96
HG	24381700	4059625445297	96
HG	24382000	4059625460788	94
HG	24382670	4059625460771	94
HG	24382700	4059625460764	94
HG	24383000	4059625460757	94
HG	24383670	4059625460740	94
HG	24383700	4059625460733	94
HG	24400000	4059625347799	120
HG	24400670	4059625489055	120
HG	24400700	4059625489048	120
HG	24401000	4059625347782	120
HG	24401670	4059625489031	120
HG	24401700	4059625489024	120
HG	24402000	4059625460726	118
HG	24402140	4059625460702	118
HG	24402670	4059625460696	118
HG	24402700	4059625460672	118
HG	24403000	4059625445136	117
HG	24403140	4059625445167	117
HG	24403670	4059625445150	117
HG	24403700	4059625445143	117
HG	24404000	4059625445174	118
HG	24404140	4059625445204	118
HG	24404670	4059625445198	118
HG	24404700	4059625445181	118
HG	24405000	4059625460658	118
HG	24405140	4059625460634	118
HG	24405670	4059625460627	118
HG	24405700	4059625460603	118
26			
HG	26014000	4059625136621	71
HG	26014140	4059625346907	71
HG	26014340	4059625346914	71
HG	26014670	4059625346921	71
HG	26014700	4059625346938	71
HG	26014990	4059625346945	71
HG	26077210	4059625478981	73
HG	26079000	4059625315125	232
HG	26089000	4059625315101	231
HG	26089670	4059625338667	231
HG	26090000	4059625299142	79
HG	26093000	4059625302514	182
HG	26094000	4059625302507	183
HG	26095000	4059625302491	183
HG	26096000	4059625302484	184
HG	26097000	4059625314791	234
HG	26097670	4059625338650	234
HG	26098000	4059625314784	235
HG	26099000	4059625314777	233
HG	26099670	4059625338643	233
HG	26162007	4059625215951	206
HG	26166007	4059625215999	202
HG	26167007	4059625216118	201
HG	26170007	4059625216132	220
HG	26171007	4059625216156	219
HG	26172007	4059625216170	221
HG	26175007	4059625216231	220
HG	26177007	4059625216279	224

Code Numbers (HG = hansgrohe, AX = AXOR)

brand	Code no.	EAN	page
HG	26181007	4059625216293	228
HG	26220000	4011097790992	176
HG	26220140	4059625264126	176
HG	26220340	4059625264102	176
HG	26220670	4059625264089	176
HG	26220700	4059625264096	176
HG	26220990	4059625264119	176
HG	26221000	4011097791104	176
HG	26221140	4059625203798	176
HG	26221340	4059625217030	176
HG	26221670	4059625264058	176
HG	26221700	4059625264065	176
HG	26221990	4059625264072	176
HG	26226000	4059625201084	153
HG	26226700	4059625201077	153
HG	26227000	4059625200780	153
HG	26227700	4059625200797	153
HG	26228000	4059625201565	154
HG	26228140	4059625264775	154
HG	26228340	4059625264751	154
HG	26228670	4059625264744	154
HG	26228700	4059625201558	154
HG	26228990	4059625264768	154
HG	26229000	4059625200902	154
HG	26229140	4059625264812	154
HG	26229340	4059625264799	154
HG	26229670	4059625264782	154
HG	26229700	4059625200919	154
HG	26229990	4059625264805	154
HG	26230000	4059625200926	153
HG	26230140	4059625264737	153
HG	26230340	4059625264713	153
HG	26230670	4059625264706	153
HG	26230700	4059625201541	153
HG	26230990	4059625264720	153
HG	26231000	4059625201534	154
HG	26231140	4059625264898	154
HG	26231340	4059625264874	154
HG	26231670	4059625264867	154
HG	26231700	4059625201527	154
HG	26231990	4059625264881	154
HG	26232000	4059625201510	152
HG	26232700	4059625201503	152
HG	26233000	4059625201497	152
HG	26233700	4059625201480	152
HG	26234000	4059625201473	152
HG	26234140	4059625264850	152
HG	26234340	4059625264836	152
HG	26234670	4059625264829	152
HG	26234700	4059625201466	152
HG	26234990	4059625264843	152
HG	26238000	4011097853420	165
HG	26238140	4059625230718	165
HG	26238340	4059625230725	165
HG	26238670	4059625230732	165
HG	26238700	4059625230749	165
HG	26238990	4059625230756	165
HG	26239000	4011097975658	165
HG	26243000	4059625201435	193
HG	26243140	4059625442982	193
HG	26243340	4059625442975	193

brand	Code no.	EAN	page
HG	26243670	4059625442968	193
HG	26243700	4059625201428	193
HG	26243990	4059625454329	193
HG	26250000	4011097853413	165
HG	26250140	4059625191934	165
HG	26250340	4059625230763	165
HG	26250670	4059625230770	165
HG	26250700	4059625230787	165
HG	26250990	4059625230794	165
HG	26251000	4011097975665	165
HG	26252000	4011097975672	166
HG	26253000	4011097975689	166
HG	26254180	4011097975696	364
HG	26257000	4059625196106	174
HG	26258000	4059625196090	174
HG	26270000	4059625299135	79
HG	26270007	4059625244319	79
HG	26270670	4059625339145	79
HG	26270677	4059625339138	79
HG	26271000	4059625302170	182
HG	26271007	4059625244340	182
HG	26271670	4059625339121	182
HG	26271677	4059625339114	182
HG	26272000	4059625328934	233
HG	26272007	4059625252482	233
HG	26272670	4059625330067	233
HG	26272677	4059625326640	233
HG	26273000	4059625325575	135
HG	26273007	4059625244326	135
HG	26274000	4059625328941	232
HG	26274007	4059625252505	232
HG	26274677	4059625326633	232
HG	26275000	4059625333228	104
HG	26275007	4059625244333	104
HG	26276000	4059625314760	231
HG	26276007	4059625252499	231
HG	26276670	4059625339084	231
HG	26277000	4059625302163	182
HG	26277670	4059625339077	182
HG	26278000	4059625325582	135
HG	26279000	4059625333235	104
HG	26281000	4059625302156	183
HG	26281007	4059625244357	184
HG	26281670	4059625339053	183
HG	26281677	4059625339046	184
HG	26282000	4059625315873	236
HG	26282007	4059625252512	236
HG	26282670	4059625339039	236
HG	26282677	4059625326626	236
HG	26283000	4059625302149	183
HG	26283670	4059625339022	183
HG	26284000	4059625328958	235
HG	26284007	4059625252536	235
HG	26284677	4059625326619	235
HG	26286000	4059625314753	234
HG	26286007	4059625252529	234
HG	26286670	4059625330074	234
HG	26289000	4059625339015	236
HG	26289670	4059625339008	236
HG	26318000	4059625338995	231
HG	26319000	4059625338988	234

brand	Code no.	EAN	page
HG	26322400	4011097787855	90
HG	26328400	4011097787794	91
HG	26329000	4011097787787	91
HG	26330400	4011097780689	78
HG	26331400	4011097780672	78
HG	26332400	4011097780665	78
HG	26333400	4011097780658	78
HG	26334400	4011097780641	78
HG	26336400	4011097792064	78
HG	26340000	4059625299128	79
HG	26340670	4059625338971	79
HG	26405000	4059625316351	189
HG	26405670	4059625326589	189
HG	26405677	4059625326572	189
HG	26406000	4059625316344	192
HG	26406670	4059625326565	192
HG	26406677	4059625326558	192
HG	26407000	4059625316337	192
HG	26407670	4059625326541	192
HG	26407677	4059625326534	192
HG	26410400	4011097744872	131
HG	26411400	4011097744865	130
HG	26412400	4011097760285	131
HG	26413400	4011097760292	131
HG	26420400	4011097757025	131
HG	26421400	4011097757018	131
HG	26422670	4059625365793	105
HG	26422677	4059625365809	105
HG	26423670	4059625365816	105
HG	26424400	4011097757049	131
HG	26425400	4011097757032	131
HG	26426007	4059625495186	231
HG	26426670	4059625425626	231
HG	26427670	4059625425596	234
HG	26427677	4059625425589	234
HG	26428670	4059625425565	231
HG	26429670	4059625425558	234
HG	26442000	4011097705941	159
HG	26453000	4011097756868	143
HG	26453140	4059625142448	143
HG	26453340	4059625308509	143
HG	26453670	4059625308523	143
HG	26453700	4059625308516	143
HG	26453990	4059625308530	143
HG	26455000	4011097756851	143
HG	26455140	4011097837291	143
HG	26455340	4011097837284	143
HG	26455670	4059625230947	143
HG	26455700	4059625230954	143
HG	26455990	4011097837390	143
HG	26456000	4011097814803	141
HG	26456400	4011097786902	141
HG	26457000	4011097756875	144
HG	26457140	4011097891873	144
HG	26457340	4011097891866	144
HG	26457670	4059625304778	144
HG	26457700	4059625304761	144
HG	26457990	4011097891972	144
HG	26464000	4011097689678	176
HG	26465000	4011097689685	176
HG	26466000	4011097720562	159

brand	Code no.	EAN	page
HG	26467000	4011097720548	160
HG	26469000	4011097720524	160
HG	26471180	4011097718637	364
HG	26472000	4011097718620	168
HG	26481000	4011097718613	168
HG	26505000	4011097773810	121
HG	26506000	4011097773803	121
HG	26511000	4011097857046	123
HG	26511400	4011097857039	123
HG	26511600	4011097961286	123
HG	26515000	4059625326763	71
HG	26516000	4059625326770	71
HG	26519000	4011097693200	124
HG	26520000	4011097706047	73
HG	26520140	4059625230824	73
HG	26520340	4059625221297	73
HG	26520400	4011097706085	73
HG	26520670	4059625230817	73
HG	26520700	4059625230800	73
HG	26520990	4059625230961	73
HG	26521000	4011097706054	72
HG	26521400	4011097706092	72
HG	26522000	4011097741956	173
HG	26524000	4011097751993	173
HG	26524400	4011097752006	173
HG	26528400	4011097752075	173
HG	26530000	4011097706764	72
HG	26530140	4059625264027	72
HG	26530340	4059625264010	72
HG	26530400	4011097726663	72
HG	26530670	4059625263990	72
HG	26530700	4059625264003	72
HG	26530990	4059625026830	72
HG	26531000	4011097719115	72
HG	26531140	4059625265925	72
HG	26531340	4059625265901	72
HG	26531670	4059625265888	72
HG	26531700	4059625265895	72
HG	26531990	4059625265918	72
HG	26532400	4011097792057	102
HG	26533400	4011097792040	102
HG	26534400	4011097792033	101
HG	26535400	4011097792026	102
HG	26536400	4011097792019	101
HG	26537400	4011097792002	101
HG	26538400	4011097791999	101
HG	26539400	4011097791982	101
HG	26550000	4011097720067	72
HG	26550400	4011097720050	72
HG	26551000	4011097720043	72
HG	26551400	4011097720036	72
HG	26553400	4011097791975	101
HG	26555400	4011097791951	101
HG	26560400	4011097744858	97
HG	26561400	4011097736228	97
HG	26562400	4011097744841	97
HG	26563400	4011097736433	97
HG	26564400	4011097744834	97
HG	26565400	4011097736426	97
HG	26566400	4011097767048	97
HG	26567400	4011097791944	133

Code Numbers (HG = hansgrohe, AX = AXOR)

brand	Code no.	EAN	page
HG	26568400	4011097791937	133
HG	26569400	4011097791920	133
HG	26570400	4011097744827	97
HG	26571400	4011097736419	97
HG	26572400	4011097744810	97
HG	26573400	4011097736402	97
HG	26574400	4011097744803	97
HG	26575400	4011097736396	97
HG	26580400	4011097753911	99
HG	26581400	4011097736389	99
HG	26582400	4011097753904	99
HG	26583400	4011097736372	99
HG	26584400	4011097753898	99
HG	26586400	4011097767055	99
HG	26590400	4011097753881	98
HG	26591400	4011097736358	98
HG	26592400	4011097753850	98
HG	26593400	4011097736341	98
HG	26594400	4011097753843	99
HG	26595400	4011097736334	99
HG	26600000	4011097754369	161
HG	26601000	4011097754826	160
HG	26604000	4011097754383	166
HG	26605000	4011097754390	164
HG	26620000	4011097706061	92
HG	26620400	4011097706078	92
HG	26621000	4011097706306	92
HG	26621400	4011097706313	92
HG	26622000	4011097711799	92
HG	26622400	4011097712000	92
HG	26623000	4011097712017	92
HG	26623400	4011097712024	92
HG	26626000	4011097691893	88
HG	26626400	4011097692043	88
HG	26630000	4011097719108	89
HG	26630400	4011097726953	89
HG	26631000	4011097719092	89
HG	26631400	4011097726960	89
HG	26632000	4011097719085	89
HG	26633000	4011097719078	89
HG	26640540	4059625301951	80
HG	26640560	4059625301944	80
HG	26640670	4059625301937	80
HG	26640700	4059625301920	80
HG	26690400	4011097791913	133
HG	26691400	4011097791906	133
HG	26692400	4011097791890	133
HG	26693400	4011097791883	133
HG	26694400	4011097791876	133
HG	26700000	4011097808741	128
HG	26701000	4011097808727	127
HG	26720000	4011097758107	128
HG	26720400	4011097758114	128
HG	26721000	4011097758121	127
HG	26721400	4011097758138	127
HG	26722000	4011097770987	180
HG	26723000	4011097770970	178
HG	26723670	4059625413296	178
HG	26724000	4011097770963	178
HG	26724670	4059625413289	178
HG	26725000	4011097770956	179

brand	Code no.	EAN	page
HG	26726000	4011097770949	180
HG	26726670	4059625413265	180
HG	26727000	4011097770932	180
HG	26727670	4059625413258	180
HG	26779007	4059625029923	227
HG	26790000	4011097801711	211
HG	26791000	4011097801704	213
HG	26792000	4011097801698	212
HG	26793000	4011097806280	214
HG	26794000	4011097806297	211
HG	26800400	4011097744599	75
HG	26801400	4011097736273	75
HG	26802400	4011097744582	75
HG	26803400	4011097736266	75
HG	26804400	4011097744575	75
HG	26805400	4011097736327	75
HG	26806400	4011097752037	75
HG	26810400	4011097750026	76
HG	26811400	4011097736259	76
HG	26812400	4011097750033	76
HG	26813400	4011097736242	76
HG	26814140	4059625346617	76
HG	26814340	4059625346624	76
HG	26814400	4011097750040	76
HG	26814670	4059625346594	76
HG	26814700	4059625346600	76
HG	26814990	4059625346631	76
HG	26815340	4059625346679	76
HG	26815400	4011097736235	76
HG	26815670	4059625346648	76
HG	26815700	4059625346655	76
HG	26815990	4059625346686	76
HG	26816400	4011097752136	76
HG	26840180	4059625241660	363
HG	26842000	4059625241653	197
HG	26842700	4059625241646	197
HG	26843000	4059625201411	140
HG	26843140	4059625442951	140
HG	26843340	4059625442944	140
HG	26843670	4059625442937	140
HG	26843700	4059625201404	140
HG	26843990	4059625454336	140
HG	26844000	4059625201398	561
HG	26844140	4059625442920	561
HG	26844340	4059625442913	561
HG	26844670	4059625442906	561
HG	26844700	4059625201381	561
HG	26844990	4059625452240	561
HG	26851000	4059625216095	126
HG	26851700	4059625216408	126
HG	26852000	4059625216415	126
HG	26852700	4059625216422	126
HG	26853000	4059625468616	196
HG	26853670	4059625468609	196
HG	26853700	4059625468593	196
HG	26856000	4059625216439	127
HG	26856700	4059625216446	127
HG	26857000	4059625216453	127
HG	26857700	4059625216460	127
HG	26858000	4059625201374	140
HG	26858140	4059625442692	140

brand	Code no.	EAN	page
HG	26858340	4059625442685	140
HG	26858670	4059625442678	140
HG	26858700	4059625201367	140
HG	26858990	4059625452295	140
HG	26864000	4059625189696	70
HG	26864140	4059625264935	70
HG	26864340	4059625264911	70
HG	26864670	4059625264904	70
HG	26864700	4059625189702	70
HG	26864990	4059625264928	70
HG	26865000	4059625198544	70
HG	26865140	4059625264973	70
HG	26865340	4059625264959	70
HG	26865670	4059625264942	70
HG	26865700	4059625198575	70
HG	26865990	4059625264966	70
HG	26866000	4059625213407	71
HG	26866140	4059625265710	71
HG	26866340	4059625265673	71
HG	26866670	4059625264980	71
HG	26866700	4059625220054	71
HG	26866990	4059625265703	71
HG	26867140	4059625265758	71
HG	26867340	4059625265734	71
HG	26867670	4059625265727	71
HG	26867990	4059625265741	71
HG	26887000	4059625433393	142
HG	26887140	4059625433362	142
HG	26887340	4059625433331	142
HG	26887670	4059625433300	142
HG	26887700	4059625433270	142
HG	26887990	4059625444221	142
HG	26888000	4059625433249	141
HG	26888140	4059625433218	141
HG	26888340	4059625433188	141
HG	26888670	4059625433157	141
HG	26888700	4059625433126	141
HG	26888990	4059625444238	141
HG	26889000	4059625433096	141
HG	26889140	4059625433065	141
HG	26889340	4059625433034	141
HG	26889670	4059625433003	141
HG	26889700	4059625431276	141
HG	26889990	4059625443286	141
HG	26890140	4059625265970	211
HG	26890340	4059625265956	211
HG	26890670	4059625265932	211
HG	26890700	4059625265949	211
HG	26890990	4059625265963	211
HG	26891140	4059625266021	211
HG	26891340	4059625266007	211
HG	26891670	4059625265987	211
HG	26891700	4059625265994	211
HG	26891990	4059625266014	211
HG	26899007	4059625495162	232
HG	26899677	4059625425534	232
HG	26900007	4059625495902	235
HG	26900677	4059625425503	235
27			
HG	27008400	4011097662251	237
HG	27013400	4011097745152	109

brand	Code no.	EAN	page
HG	27014400	4011097745169	109
HG	27028400	4011097771106	198
HG	27032000	4011097679655	112
HG	27033000	4011097679662	112
HG	27034000	4011097679679	112
HG	27035000	4011097679686	112
HG	27036000	4011097679303	106
HG	27036400	4011097691824	106
HG	27037000	4011097679310	106
HG	27037400	4011097691831	106
HG	27038000	4011097727936	107
HG	27038400	4011097727943	107
HG	27039000	4011097727950	107
HG	27039400	4011097727967	107
HG	27081400	4011097755243	111
HG	27082400	4011097755250	111
HG	27085000	4011097537566	112
HG	27086000	4011097537573	112
HG	27106400	4011097771113	198
HG	27109400	4011097771090	198
HG	27112000	4011097679549	204
HG	27112400	4011097679556	204
HG	27113000	4011097679563	205
HG	27113400	4011097679570	205
HG	27114000	4011097679587	201
HG	27116000	4011097690117	201
HG	27117000	4011097690124	202
HG	27127000	4011097716930	203
HG	27127400	4011097716923	203
HG	27129000	4011097718132	199
HG	27129400	4011097718125	199
HG	27133400	4011097718101	199
HG	27185000	4011097689692	219
HG	27188000	4011097690148	219
HG	27222000	4011097690155	221
HG	27223000	4011097690162	220
HG	27224000	4011097690179	222
HG	27247400	4011097770000	215
HG	27248400	4011097770024	216
HG	27267000	4011097775944	223
HG	27268000	4011097775937	223
HG	27269000	4011097775920	225
HG	27270000	4011097775913	226
HG	27271000	4011097775906	227
HG	27281000	4011097775890	227
HG	27283000	4011097755205	203
HG	27284000	4011097775883	229
HG	27286000	4011097754246	204
HG	27286400	4011097754253	204
HG	27288000	4011097751245	206
HG	27288400	4011097751238	206
HG	27289000	4011097775876	230
HG	27298000	4011097801681	228
HG	27320000	4011097801674	224
HG	27337400	4011097720593	160
HG	27340007	4011097780221	223
HG	27341007	4011097780214	225
HG	27342007	4011097779997	226
HG	27344007	4011097780269	227
HG	27345007	4011097780252	229
HG	27355000	4011097815732	123

Code Numbers (HG = hansgrohe, AX = AXOR)

brand	Code no.	EAN	page
HG	27356000	4011097815749	123
HG	27361000	4011097971735	207
HG	27362000	4011097971728	207
HG	27363000	4011097971711	207
HG	27364000	4011097971704	207
HG	27370000	4011097625126	164
HG	27371000	4011097625140	164
HG	27375000	4011097655727	164
HG	27376000	4011097691435	164
HG	27378000	4011097720586	159
HG	27378400	4011097720579	159
HG	27380000	4011097625119	167
HG	27381000	4011097625133	166
HG	27388000	4011097783253	191
HG	27389000	4011097783260	190
HG	27389140	4059625234471	190
HG	27389340	4059625234488	190
HG	27389670	4059625234495	190
HG	27389700	4059625234464	190
HG	27389990	4059625234457	190
HG	27393000	4011097769837	190
HG	27393140	4059625234518	190
HG	27393340	4059625234525	190
HG	27393670	4059625234440	190
HG	27393700	4059625234501	190
HG	27393990	4059625234532	190
HG	27405000	4011097592466	168
HG	27411000	4011097112930	188
HG	27412000	4011097112947	188
HG	27412140	4011097819655	188
HG	27412250	4011097819679	188
HG	27412300	4011097819952	188
HG	27412310	4011097819686	188
HG	27412330	4011097819907	188
HG	27412340	4011097819648	188
HG	27412800	4011097405391	188
HG	27412820	4011097848730	188
HG	27412950	4011097819631	188
HG	27413000	4011097112978	187
HG	27413140	4011097819983	187
HG	27413340	4011097819976	187
HG	27413670	4059625264034	187
HG	27413700	4059625264041	187
HG	27413990	4011097820064	187
HG	27414000	4011097614083	144
HG	27438000	4011097113128	188
HG	27441000	4011097537580	178
HG	27446000	4011097759746	189
HG	27454000	4011097113258	142
HG	27454140	4011097892863	142
HG	27454340	4011097892825	142
HG	27454670	4059625266090	142
HG	27454700	4059625266106	142
HG	27454990	4011097113425	142
HG	27458000	4011097113449	142
HG	27461000	4011097528205	162
HG	27463000	4011097528229	161
HG	27467000	4011097759753	191
HG	27474000	4011097413693	162
HG	27477000	4011097413709	161
HG	27478000	4011097415819	161

brand	Code no.	EAN	page
HG	27492000	4011097583556	160
HG	27493000	4011097563831	160
HG	27494000	4011097563824	161
HG	27505000	4011097678733	142
HG	27506000	4011097678726	143
HG	27521000	4011097157818	138
HG	27559000	4011097570242	134
HG	27574000	4011097663968	132
HG	27576000	4011097663982	134
HG	27577000	4011097663999	134
HG	27592000	4011097537436	132
HG	27594000	4011097537450	132
HG	27607000	4059625137161	162
HG	27610000	4011097537504	121
HG	27611000	4011097537511	121
HG	27615000	4011097570174	122
HG	27620000	4059625137178	161
HG	27623000	4059625137185	162
HG	27623670	4059625340028	162
HG	27623700	4059625340011	162
HG	27630000	4059625196052	217
HG	27633000	4059625154892	199
HG	27633140	4059625230978	199
HG	27633340	4059625230985	199
HG	27633670	4059625230992	199
HG	27633700	4059625231005	199
HG	27633990	4059625231012	199
HG	27636000	4011097587448	117
HG	27640000	4011097857022	116
HG	27640400	4011097857015	116
HG	27645000	4011097857008	116
HG	27646000	4011097856988	93
HG	27648000	4011097856940	93
HG	27648400	4011097856933	93
HG	27649000	4011097856926	93
HG	27652000	4011097607139	103
HG	27653000	4011097607146	100
HG	27654000	4059625154908	89
HG	27660000	4059625196045	217
HG	27667000	4059625154915	89
HG	27668000	4059625157077	127
HG	27669000	4059625157084	127
HG	27670007	4059625157060	200
HG	27670147	4059625247631	200
HG	27670347	4059625247624	200
HG	27670677	4059625247617	200
HG	27670707	4059625247600	200
HG	27670997	4059625247396	200
HG	27671000	4059625214145	87
HG	27672000	4059625214152	87
HG	27673000	4059625214169	87
HG	27674000	4059625214176	87
HG	27687000	4059625196038	218
HG	27694000	4059625261309	186
HG	27694140	4059625266199	186
HG	27694340	4059625266175	186
HG	27694670	4059625266168	186
HG	27694700	4059625261316	186
HG	27694990	4059625266182	186
HG	27704000	4011097710495	121
HG	27717000	4011097664828	100

Code Numbers (HG = hansgrohe, AX = AXOR)

brand	Code no.	EAN	page
HG	27724000	4011097664835	100
HG	27728000	4011097664859	103
HG	27763000	4011097570198	103
HG	27764000	4011097610221	103
HG	27766000	4011097570204	103
HG	27771000	4011097537290	100
HG	27772000	4011097537405	100
HG	27774000	4011097537412	100
HG	27775000	4011097537429	100
HG	27776000	4011097537528	100
HG	27802000	4011097679600	89
HG	27803000	4011097679624	89
HG	27804007	4059625282090	191
HG	27804677	4059625326510	191
HG	27805007	4059625282083	191
HG	27805677	4059625326497	191
HG	27809007	4059625282076	187
HG	27809677	4059625326473	187
HG	27812400	4011097803265	113
HG	27813400	4011097803272	113
HG	27833400	4059625039175	110
HG	27857000	4011097720005	92
HG	27902670	4059625352892	576
HG	27902700	4059625353035	576
HG	27904670	4059625352885	576
HG	27904700	4059625353028	576
HG	27912670	4059625352861	576
HG	27912700	4059625353004	576
HG	27913670	4059625352854	576
HG	27913700	4059625352991	576
HG	27914670	4059625352847	578
HG	27914700	4059625352984	578
HG	27915670	4059625352830	577
HG	27915700	4059625352977	577
HG	27916670	4059625352823	579
HG	27916700	4059625352960	579
HG	27917670	4059625347331	579
HG	27917700	4059625347348	579
HG	27921670	4059625352816	580
HG	27921700	4059625352953	580
HG	27925670	4059625352809	580
HG	27925700	4059625352946	580
HG	27926670	4059625352793	578
HG	27926700	4059625352939	578
HG	27927670	4059625352786	581
HG	27927700	4059625352922	581
HG	27928670	4059625352779	581
HG	27928700	4059625352915	581
HG	27929670	4059625352762	578
HG	27929700	4059625352908	578
HG	27939670	4059625321546	167
HG	27951000	4059625341155	163
HG	27952000	4059625341179	167
HG	27953000	4059625341186	175
HG	27954000	4059625341193	177
HG	27957000	4059625341216	181
HG	27958000	4059625341223	179
HG	27959670	4059625347157	163
HG	27961670	4059625347164	177
HG	27966670	4059625368398	583
HG	27966700	4059625368381	583
HG	27967670	4059625368374	582
HG	27967700	4059625368367	582
HG	27968670	4059625368350	583
HG	27968700	4059625368336	583
HG	27969670	4059625368312	583
HG	27969700	4059625368305	583
28			
HG	28010000	4059625203026	349
HG	28010140	4059625241639	349
HG	28010340	4059625241622	349
HG	28010670	4059625241615	349
HG	28010700	4059625241608	349
HG	28010990	4059625241592	349
HG	28016000	4059625206676	351
HG	28020000	4059625203002	349
HG	28020140	4059625358849	349
HG	28020340	4059625358856	349
HG	28020670	4059625310731	349
HG	28020700	4059625310748	349
HG	28020990	4059625358863	349
HG	28021000	4059625206690	351
HG	28071000	4011097115498	762
HG	28072000	4011097436920	150
HG	28132000	4011097557854	147
HG	28134000	4011097557861	147
HG	28136000	4011097557847	147
HG	28167000	4011097796055	149
HG	28168000	4011097796062	149
HG	28220000	4059625462850	146
HG	28220140	4059625462843	146
HG	28220340	4059625462836	146
HG	28220670	4059625462829	146
HG	28220700	4059625462812	146
HG	28221210	4059625462805	147
HG	28230000	4059625462799	146
HG	28230140	4059625462782	146
HG	28230340	4059625462775	146
HG	28230670	4059625462768	146
HG	28230700	4059625462751	146
HG	28230820	4059625462744	146
HG	28230990	4059625462737	146
HG	28248000	4059625024799	148
HG	28249000	4059625024782	148
HG	28250210	4059625462720	147
HG	28260000	4059625462713	146
HG	28260140	4059625462690	146
HG	28260340	4059625462676	146
HG	28260670	4059625462652	146
HG	28260700	4059625462638	146
HG	28260820	4059625462614	146
HG	28260990	4059625462607	146
HG	28262000	4011097314044	149
HG	28266000	4011097260860	149
HG	28272000	4011097314013	148
HG	28272140	4011097838779	148
HG	28272310	4011097838861	148
HG	28272340	4011097838748	148
HG	28272450	4011097327099	148
HG	28272670	4059625302125	148
HG	28272700	4059625302132	148
HG	28272800	4011097411835	148

Code Numbers (HG = hansgrohe, AX = AXOR)

brand	Code no.	EAN	page
HG	28272820	4011097756011	148
HG	28272990	4011097838984	148
HG	28274000	4011097314020	148
HG	28276000	4011097314037	148
HG	28276090	4011097327143	148
HG	28276140	4011097839677	148
HG	28276250	4011097839752	148
HG	28276300	4011097839998	148
HG	28276340	4011097839639	148
HG	28276450	4011097327150	148
HG	28276460	4011097667201	748
HG	28276610	4011097667225	748
HG	28276670	4059625231029	148
HG	28276700	4059625231036	148
HG	28276800	4011097411804	148
HG	28276820	4011097396934	148
HG	28276840	4011097327174	148
HG	28276880	4011097327181	748
HG	28276950	4011097839592	148
HG	28276990	4011097839950	148
HG	28321000	4011097116587	139
HG	28324000	4011097594958	139
HG	28328000	4011097734514	139
HG	28331000	4011097487311	138
HG	28331140	4011097830452	138
HG	28331340	4011097830421	138
HG	28331670	4059625273708	138
HG	28331700	4059625273692	138
HG	28331800	4011097487335	138
HG	28331990	4011097830698	138
HG	28346000	4011097116969	81
HG	28387000	4059625214121	138
HG	28387140	4059625231043	138
HG	28387340	4059625231050	138
HG	28387670	4059625231067	138
HG	28387700	4059625231074	138
HG	28387990	4059625231081	138
HG	28414180	4011097591766	363
HG	28423000	4011097570136	182
HG	28433000	4011097660936	158
HG	28466000	4011097192437	193
HG	28496000	4011097141909	185
HG	28535000	4011097537306	77
HG	28536000	4011097537016	77
HG	28536450	4011097681153	749
HG	28536460	4011097681146	749
HG	28536880	4011097706641	749
HG	28537000	4011097537269	77
HG	28538000	4011097537276	77
HG	28562000	4011097570112	78
HG	28563000	4011097570129	78
HG	28580000	4011097664804	77
HG	28583000	4011097664811	77
HG	28585000	4011097664842	78
HG	28587000	4011097679327	71
HG	28587400	4011097679334	71
HG	28588000	4011097679341	71
HG	28588400	4011097679358	71
HG	28631000	4011097487175	119
HG	28631140	4059625231098	119
HG	28631340	4059625229606	119
HG	28631670	4059625231104	119
HG	28631700	4059625231111	119
HG	28631820	4011097499574	119
HG	28631990	4059625231128	119
HG	28632000	4011097487199	119
HG	28632140	4059625231135	119
HG	28632340	4059625231142	119
HG	28632670	4059625231159	119
HG	28632700	4059625231166	119
HG	28632990	4059625231173	119
HG	28672000	4011097118833	749
HG	28678000	4011097537283	124
HG	28679000	4011097487557	124
HG	28742000	4059625489017	196
HG	28742670	4059625489000	196
HG	28742700	4059625488997	196
HG	28743000	4059625488980	86
HG	28743140	4059625488973	86
HG	28743340	4059625488966	86
HG	28743670	4059625488959	86
HG	28743700	4059625488942	86
HG	28743990	4059625488935	86
HG	28744000	4059625488928	86
HG	28744140	4059625488911	86
HG	28744340	4059625488904	86
HG	28744670	4059625488898	86
HG	28744700	4059625488881	86
HG	28744990	4059625488874	86
HG	28745000	4059625488867	86
HG	28745140	4059625488850	86
HG	28745340	4059625488843	86
HG	28745670	4059625488836	86
HG	28745700	4059625488829	86
HG	28745990	4059625488812	86
HG	28746000	4059625488805	86
HG	28746140	4059625487990	86
HG	28746340	4059625487983	86
HG	28746670	4059625487976	86
HG	28746700	4059625487969	86
HG	28746990	4059625487952	86
HG	28760210	4059625361337	79
HG	28787640	4059625361351	79
HG	28788570	4059625361375	80
HG	28911210	4059625479407	585
HG	28912210	4059625479414	585
HG	28913210	4059625479421	586
HG	28915210	4059625479445	586
HG	28916210	4059625479452	587
HG	28917210	4059625479469	585
HG	28918210	4059625479476	586
29			
HG	29230000	4059625404348	81
HG	29230670	4059625404379	81
HG	29230700	4059625404355	81
HG	29231000	4059625404393	81
HG	29231670	4059625405932	81
HG	29231700	4059625405918	81
HG	29232000	4059625405956	82
HG	29232140	4059625406052	82
HG	29232340	4059625406014	82
HG	29232670	4059625405970	82

brand	Code no.	EAN	page
HG	29232700	4059625405994	82
HG	29233000	4059625406076	82
HG	29233140	4059625406175	82
HG	29233340	4059625406137	82
HG	29233670	4059625406090	82
HG	29233700	4059625406113	82
HG	29234000	4059625406199	83
HG	29235180	4059625406212	83
31			
HG	31074000	4011097660950	397
HG	31080000	4011097660967	396
HG	31082000	4011097660981	396
HG	31084000	4011097661001	396
HG	31085000	4011097661018	398
HG	31086000	4011097661025	398
HG	31086007	4059625156261	398
HG	31087000	4011097651231	398
HG	31088000	4011097661032	396
HG	31100000	4011097519210	548
HG	31101000	4011097519227	548
HG	31102000	4011097519234	548
HG	31103000	4011097519241	548
HG	31121000	4011097691527	396
HG	31130000	4011097679396	483
HG	31132000	4011097678030	481
HG	31171000	4011097679112	485
HG	31172000	4011097679129	485
HG	31173000	4011097679136	485
HG	31174000	4011097679143	485
HG	31183000	4011097661056	396
HG	31184000	4011097692319	397
HG	31185000	4011097705149	396
HG	31186000	4011097710402	396
HG	31187000	4011097674056	398
HG	31190000	4011097661063	403
HG	31204000	4011097719320	397
HG	31251000	4011097718590	399
HG	31280000	4011097661070	399
HG	31285000	4011097661094	400
HG	31442000	4011097661100	403
HG	31451000	4011097748450	401
HG	31454000	4011097748443	401
HG	31456000	4011097748467	404
HG	31471000	4011097760667	400
HG	31480000	4011097656687	401
HG	31480007	4011097691275	401
HG	31484000	4011097661117	402
HG	31487000	4011097661124	401
HG	31493000	4011097661131	401
HG	31494000	4011097661148	402
HG	31509000	4011097755847	480
HG	31513000	4011097719313	481
HG	31517000	4011097679402	480
HG	31518000	4011097679419	480
HG	31519000	4011097679426	483
HG	31531000	4011097795201	480
HG	31532000	4011097795218	480
HG	31539000	4011097734026	480
HG	31603000	4011097719306	481
HG	31604000	4011097706160	480
HG	31607000	4011097679433	480

brand	Code no.	EAN	page
HG	31608000	4011097679440	480
HG	31609000	4011097679457	483
HG	31621000	4011097691510	480
HG	31657000	4011097696089	482
HG	31677000	4011097665290	332
HG	31680000	4011097656694	404
HG	31680007	4011097691282	404
HG	31685000	4011097661155	404
HG	31686000	4011097661162	405
HG	31730000	4011097590769	480
HG	31732000	4011097602424	480
HG	31733000	4011097590783	480
HG	31741180	4011097477237	356
HG	31800007	4011097769516	684
HG	31804000	4011097641898	683
HG	31806000	4011097641904	682
HG	31806800	4011097654829	682
HG	31815000	4011097718187	680
HG	31815670	4059625231180	680
HG	31815800	4011097718309	680
HG	31816000	4011097646312	683
HG	31817000	4011097718194	681
HG	31817670	4059625231197	681
HG	31817800	4011097726717	681
HG	31820000	4011097679464	681
HG	31820007	4011097829982	681
HG	31820670	4059625231203	681
HG	31820800	4011097679471	681
HG	31821000	4059625196700	681
HG	31821800	4059625197974	681
HG	31822000	4011097679488	680
HG	31825000	4011097708041	684
HG	31826000	4059625196694	682
HG	31827000	4059625196786	681
HG	31833000	4059625196717	680
HG	31910000	4011097725819	482
HG	31911000	4011097725833	482
HG	31913000	4011097725864	485
HG	31914000	4011097757421	482
HG	31915000	4011097757438	482
HG	31916000	4011097725857	491
HG	31920000	4011097591506	486
HG	31922000	4011097706177	486
HG	31923000	4011097766072	484
HG	31926000	4011097646688	487
HG	31927000	4011097728544	487
HG	31928000	4011097646329	486
HG	31930000	4011097629889	489
HG	31931000	4011097629896	490
HG	31937000	4011097689739	484
HG	31938000	4011097646336	490
HG	31940000	4011097591520	487
HG	31945000	4011097602523	488
HG	31946000	4011097602547	488
HG	31947000	4011097602561	489
HG	31948000	4011097646343	488
HG	31952000	4011097719283	481
HG	31960000	4011097591544	491
HG	31961000	4059625194195	493
HG	31964000	4011097708560	493
HG	31965000	4011097602615	492

Code Numbers (HG = hansgrohe, AX = AXOR)

brand	Code no.	EAN	page
HG	31968000	4011097646350	491
32			
HG	32020000	4011097397382	461
HG	32032000	4011097399287	461
HG	32070000	4011097473574	462
HG	32420000	4011097397894	463
HG	32477000	4011097399430	463
HG	32500000	4011097812786	381
HG	32500140	4059625229286	381
HG	32500340	4059625229293	381
HG	32500670	4059625231210	381
HG	32500700	4059625231227	381
HG	32501000	4011097812762	381
HG	32502000	4011097812755	382
HG	32503000	4011097812724	382
HG	32506000	4011097812687	382
HG	32507000	4011097812649	382
HG	32507140	4059625229316	382
HG	32507340	4059625229330	382
HG	32507670	4059625212455	382
HG	32507700	4059625212462	382
HG	32507990	4059625229347	382
HG	32508000	4011097812625	382
HG	32511000	4011097812588	383
HG	32511140	4059625222539	383
HG	32511340	4059625222546	383
HG	32511670	4059625231234	383
HG	32511700	4059625231241	383
HG	32511990	4059625222553	383
HG	32512000	4011097812540	383
HG	32512140	4059625229354	383
HG	32512340	4059625229378	383
HG	32512670	4059625231500	383
HG	32512700	4059625231517	383
HG	32512990	4059625229385	383
HG	32514000	4011097810973	384
HG	32515000	4011097835297	384
HG	32515140	4059625229392	384
HG	32515340	4059625229408	384
HG	32515670	4059625231524	384
HG	32515700	4059625231531	384
HG	32515990	4059625229415	384
HG	32520140	4059625229446	386
HG	32520340	4059625229453	386
HG	32520670	4059625231548	386
HG	32520700	4059625231555	386
HG	32520990	4059625229460	386
HG	32522000	4011097812441	386
HG	32525000	4011097835280	384
HG	32526000	4011097835273	385
HG	32526140	4059625229422	385
HG	32526340	4059625204672	385
HG	32526670	4059625231562	385
HG	32526700	4059625231579	385
HG	32526990	4059625229439	385
HG	32530000	4011097835266	385
HG	32531000	4011097835259	389
HG	32532000	4011097835242	387
HG	32532140	4059625229491	387
HG	32532340	4059625229507	387
HG	32532670	4059625231586	387

brand	Code no.	EAN	page
HG	32532700	4059625231593	387
HG	32532990	4059625229514	387
HG	32540000	4011097812410	388
HG	32540140	4059625231708	388
HG	32540340	4059625229477	388
HG	32540670	4059625231715	388
HG	32540700	4059625231722	388
HG	32540990	4059625231739	388
HG	32542000	4059625007266	390
HG	32543000	4011097835235	390
HG	32543140	4059625231746	390
HG	32543340	4059625231753	390
HG	32543670	4059625231760	390
HG	32543700	4059625231777	390
HG	32543990	4059625231784	390
HG	32545000	4011097826097	388
HG	32545140	4059625231791	388
HG	32545340	4059625229484	388
HG	32545670	4059625231807	388
HG	32545700	4059625231814	388
HG	32545990	4059625231821	388
HG	32546000	4011097826073	389
HG	32546140	4059625231838	389
HG	32546340	4059625231845	389
HG	32546670	4059625231852	389
HG	32546700	4059625231869	389
HG	32546990	4059625231876	389
HG	32548000	4011097835228	391
HG	32550000	4011097835211	391
HG	32551000	4011097835204	392
HG	32552000	4011097835198	392
HG	32553000	4011097835181	393
HG	32560000	4011097812373	394
HG	32560140	4059625241585	394
HG	32560340	4059625241578	394
HG	32560670	4059625241561	394
HG	32560990	4059625241547	394
HG	32565000	4011097826066	394
HG	32565140	4059625231883	394
HG	32565340	4059625231890	394
HG	32565670	4059625231906	394
HG	32565700	4059625231913	394
HG	32565990	4059625231920	394
HG	32570000	4011097812335	380
HG	32571000	4011097812304	380
HG	32572000	4011097812274	380
HG	32675000	4011097398006	465
HG	32841000	4011097521565	670
40			
HG	40089000	4011097147208	575
HG	40418000	4011097191669	705
HG	40418800	4011097304342	705
HG	40438000	4059625131589	704
HG	40438340	4059625297469	704
HG	40438670	4059625297452	704
HG	40438800	4059625131596	704
HG	40448000	4059625131602	704
HG	40448670	4059625297445	704
HG	40448800	4059625131619	704
HG	40468000	4059625131626	704
HG	40468670	4059625297438	704

brand	Code no.	EAN	page
HG	40468800	4059625131633	704
HG	40952800	4059625027134	652
HG	40953670	4059625325148	652
HG	40953800	4059625027141	652
HG	40960000	4059625175194	705
HG	40961000	4059625175200	705
HG	40962800	4059625189276	706
HG	40963000	4059625189269	706
41			
HG	41710000	4059625123140	571
HG	41711000	4059625123089	572
HG	41712000	4059625123010	571
HG	41713000	4059625123102	571
HG	41714000	4059625123133	570
HG	41715000	4059625123058	570
HG	41716000	4059625123003	571
HG	41717000	4059625123126	573
HG	41718000	4059625123041	570
HG	41720000	4059625123027	572
HG	41722000	4059625123034	573
HG	41723000	4059625123119	573
HG	41724000	4059625123065	572
HG	41725000	4059625123096	572
HG	41726000	4059625123072	573
HG	41727000	4059625131374	574
HG	41728000	4059625131381	574
HG	41741007	4059625298909	562
HG	41741147	4059625298558	562
HG	41741347	4059625298541	562
HG	41741677	4059625298534	562
HG	41741707	4059625298527	562
HG	41741997	4059625298510	562
HG	41742007	4059625298503	562
HG	41742147	4059625298497	562
HG	41742347	4059625298480	562
HG	41742677	4059625298473	562
HG	41742707	4059625298466	562
HG	41742997	4059625298459	562
HG	41743007	4059625298442	563
HG	41743147	4059625298435	563
HG	41743347	4059625298428	563
HG	41743677	4059625298411	563
HG	41743707	4059625298404	563
HG	41743997	4059625298398	563
HG	41744007	4059625298381	565
HG	41744147	4059625298374	565
HG	41744347	4059625298367	565
HG	41744677	4059625298893	565
HG	41744707	4059625298886	565
HG	41744997	4059625298350	565
HG	41745007	4059625298879	567
HG	41745147	4059625298862	567
HG	41745347	4059625298855	567
HG	41745677	4059625298848	567
HG	41745707	4059625298831	567
HG	41745997	4059625298824	567
HG	41746007	4059625298817	567
HG	41746147	4059625298800	567
HG	41746347	4059625298794	567
HG	41746677	4059625298787	567
HG	41746707	4059625298770	567

brand	Code no.	EAN	page
HG	41746997	4059625298763	567
HG	41747007	4059625298756	563
HG	41747147	4059625298749	563
HG	41747347	4059625298732	563
HG	41747677	4059625298725	563
HG	41747707	4059625298718	563
HG	41747997	4059625298701	563
HG	41748007	4059625298695	566
HG	41748147	4059625298688	566
HG	41748347	4059625298671	566
HG	41748677	4059625298664	566
HG	41748707	4059625298657	566
HG	41748997	4059625298640	566
HG	41749007	4059625298633	568
HG	41749147	4059625298626	568
HG	41749347	4059625298619	568
HG	41749677	4059625298602	568
HG	41749707	4059625298596	568
HG	41749997	4059625298589	568
HG	41751007	4059625323137	563
HG	41751147	4059625323205	563
HG	41751347	4059625323151	563
HG	41751677	4059625323243	563
HG	41751707	4059625323229	563
HG	41751997	4059625323175	563
HG	41752007	4059625323267	567
HG	41752147	4059625323328	567
HG	41752347	4059625323281	567
HG	41752677	4059625323366	567
HG	41752707	4059625323342	567
HG	41752997	4059625323304	567
HG	41753007	4059625323380	566
HG	41753147	4059625323441	566
HG	41753347	4059625323403	566
HG	41753677	4059625323489	566
HG	41753707	4059625323465	566
HG	41753997	4059625323427	566
HG	41754007	4059625323502	564
HG	41754147	4059625323564	564
HG	41754347	4059625323526	564
HG	41754677	4059625323601	564
HG	41754707	4059625323588	564
HG	41754997	4059625323540	564
HG	41755007	4059625323625	562
HG	41755147	4059625323687	562
HG	41755347	4059625323649	562
HG	41755677	4059625323724	562
HG	41755707	4059625323700	562
HG	41755997	4059625323663	562
HG	41756007	4059625323748	566
HG	41756147	4059625323809	566
HG	41756347	4059625323762	566
HG	41756677	4059625323847	566
HG	41756707	4059625323823	566
HG	41756997	4059625323786	566
HG	41759007	4059625324523	564
HG	41759147	4059625324585	564
HG	41759347	4059625324547	564
HG	41759677	4059625324622	564
HG	41759707	4059625324608	564
HG	41759997	4059625324561	564

Code Numbers (HG = hansgrohe, AX = AXOR)

brand	Code no.	EAN	page
HG	41770007	4059625323861	564
HG	41770147	4059625323922	564
HG	41770347	4059625323885	564
HG	41770677	4059625323960	564
HG	41770707	4059625323946	564
HG	41770997	4059625323908	564
HG	41771007	4059625323984	565
HG	41771147	4059625324042	565
HG	41771347	4059625324004	565
HG	41771677	4059625324080	565
HG	41771707	4059625324066	565
HG	41771997	4059625324028	565
HG	41772007	4059625324103	565
HG	41772147	4059625324165	565
HG	41772347	4059625324127	565
HG	41772677	4059625324202	565
HG	41772707	4059625324189	565
HG	41772997	4059625324141	565
HG	41773007	4059625324226	568
HG	41773147	4059625324288	568
HG	41773347	4059625324240	568
HG	41773677	4059625324325	568
HG	41773707	4059625324301	568
HG	41773997	4059625324264	568
HG	41774007	4059625324349	568
HG	41774147	4059625324400	568
HG	41774347	4059625324363	568
HG	41774677	4059625324448	568
HG	41774707	4059625324424	568
HG	41774997	4059625324387	568
HG	41775007	4059625324462	569
HG	41775677	4059625324509	569
HG	41775707	4059625324486	569
HG	41791007	4059625322062	569
HG	41791147	4059625322093	569
HG	41791347	4059625322079	569
HG	41791677	4059625322116	569
HG	41791707	4059625322109	569
HG	41791997	4059625322086	569
43			
HG	43301809	4059625115831	636
HG	43302809	4059625123157	636
HG	43303809	4059625119921	636
HG	43304809	4059625119952	636
HG	43343807	4059625306444	640
HG	43344807	4059625306468	640
HG	43345807	4059625306482	640
HG	43346807	4059625306499	640
HG	43353807	4059625306628	641
HG	43354807	4059625306635	641
HG	43355807	4059625306642	641
HG	43426809	4059625100417	637
HG	43428809	4059625115862	637
HG	43430809	4059625100431	638
HG	43431170	4059625104903	644
HG	43431290	4059625104897	644
HG	43431380	4059625104880	644
HG	43432170	4059625104873	644
HG	43432290	4059625104866	644
HG	43432380	4059625104859	644
HG	43433170	4059625104842	645

brand	Code no.	EAN	page
HG	43433290	4059625104835	645
HG	43433380	4059625104828	645
HG	43434170	4059625104811	645
HG	43434290	4059625104804	645
HG	43434380	4059625104798	645
HG	43435809	4059625119969	637
HG	43453807	4059625306451	641
HG	43454807	4059625306475	641
HG	43920009	4059625100424	648
HG	43921009	4059625115879	648
HG	43922009	4059625100448	647
HG	43922800	4059625248720	647
HG	43923009	4059625119976	647
HG	43927000	4059625105009	646
HG	43928000	4059625104996	647
HG	43930009	4059625115848	650
HG	43931009	4059625115886	650
HG	43932009	4059625119938	649
HG	43933009	4059625119983	649
HG	43937000	4059625104989	648
HG	43938000	4059625104972	649
HG	43940009	4059625115855	651
HG	43941009	4059625115893	651
HG	43942009	4059625119945	651
HG	43943009	4059625119990	650
HG	43961807	4059625376959	646
HG	43962807	4059625376966	646
50			
HG	50001000	4011097146867	270
HG	50001140	4011097820347	270
HG	50001340	4011097820330	270
HG	50001670	4059625324950	270
HG	50001700	4059625324967	270
HG	50001990	4011097820415	270
HG	50100000	4011097369495	269
HG	50100140	4011097820125	269
HG	50100340	4011097820101	269
HG	50100670	4059625266113	269
HG	50100700	4059625266120	269
HG	50100990	4011097820286	269
HG	50105000	4011097716282	269
HG	50107000	4011097664323	260
HG	50120007	4059625401675	604
52			
HG	52010000	4011097123349	274
HG	52053000	4011097123431	273
HG	52100000	4011097346199	270
HG	52105000	4011097440804	271
HG	52105140	4059625001400	271
HG	52105340	4059625001370	271
HG	52105670	4059625240182	271
HG	52105700	4059625240199	271
HG	52105990	4059625001707	271
HG	52120000	4011097369563	270
53			
HG	53002000	4011097123912	274
HG	53010000	4011097123936	274
HG	53428000	4011097124070	276
HG	53428670	4059625346747	276
HG	53428700	4059625346754	276
HG	53493000	4011097124193	275

brand	Code no.	EAN	page
HG	53493670	4059625315149	275
HG	53493700	4059625315132	275
HG	53555000	4011097124308	275
HG	53646000	4011097124384	276
HG	53971000	4011097124872	762
HG	53985000	4011097124988	764
HG	53990000	4011097125008	276
55			
HG	55237000	4011097125138	275
56			
HG	56010180	4059625355589	255
HG	56011180	4059625355572	255
HG	56012180	4059625355565	255
HG	56013180	4059625355558	255
HG	56014180	4059625355541	255
HG	56015180	4059625355534	255
HG	56016180	4059625355527	257
HG	56017180	4059625355510	257
HG	56018180	4059625355503	257
HG	56019180	4059625355497	257
HG	56020180	4059625355480	257
HG	56021180	4059625355473	257
HG	56022180	4059625355466	256
HG	56023180	4059625355459	256
HG	56024180	4059625355442	256
HG	56025180	4059625355435	256
HG	56026180	4059625355428	256
HG	56027180	4059625355411	256
HG	56029000	4059625350621	245
HG	56030000	4059625350614	245
HG	56031000	4059625350607	245
HG	56032000	4059625350591	246
HG	56033000	4059625350584	246
HG	56034000	4059625350577	246
HG	56036000	4059625350553	243
HG	56036450	4059625360989	243
HG	56036610	4059625360972	243
HG	56036670	4059625350515	243
HG	56036700	4059625350508	243
HG	56036800	4059625355398	243
HG	56037000	4059625350492	243
HG	56037450	4059625360965	243
HG	56037610	4059625360958	243
HG	56037670	4059625350454	243
HG	56037700	4059625350447	243
HG	56037800	4059625355381	243
HG	56038000	4059625350430	243
HG	56038450	4059625360941	243
HG	56038610	4059625360934	243
HG	56038670	4059625350393	243
HG	56038700	4059625350386	243
HG	56038800	4059625355374	243
HG	56040000	4059625350362	243
HG	56040450	4059625360927	243
HG	56040610	4059625360910	243
HG	56040670	4059625350324	243
HG	56040700	4059625350317	243
HG	56040800	4059625355367	243
HG	56041000	4059625350300	243
HG	56041450	4059625360903	243
HG	56041610	4059625360897	243

brand	Code no.	EAN	page
HG	56041670	4059625350263	243
HG	56041700	4059625350256	243
HG	56041800	4059625355350	243
HG	56042000	4059625350249	244
HG	56042450	4059625360880	244
HG	56042610	4059625360873	244
HG	56042670	4059625350201	244
HG	56042700	4059625350195	244
HG	56042800	4059625355343	244
HG	56043000	4059625350188	240
HG	56043140	4059625350171	240
HG	56043340	4059625350164	240
HG	56043670	4059625350157	240
HG	56043700	4059625350140	240
HG	56043800	4059625350133	240
HG	56043990	4059625350126	240
HG	56044000	4059625350119	240
HG	56044140	4059625350102	240
HG	56044340	4059625350096	240
HG	56044670	4059625350089	240
HG	56044700	4059625350072	240
HG	56044800	4059625350065	240
HG	56044990	4059625350058	240
HG	56045000	4059625350041	240
HG	56045140	4059625350034	240
HG	56045340	4059625350027	240
HG	56045670	4059625350010	240
HG	56045700	4059625350003	240
HG	56045800	4059625349991	240
HG	56045990	4059625349984	240
HG	56046000	4059625349977	240
HG	56046140	4059625349960	240
HG	56046340	4059625349953	240
HG	56046670	4059625349946	240
HG	56046700	4059625349939	240
HG	56046800	4059625349922	240
HG	56046990	4059625349915	240
HG	56047000	4059625349908	241
HG	56047140	4059625349892	241
HG	56047340	4059625349885	241
HG	56047670	4059625349878	241
HG	56047700	4059625349861	241
HG	56047800	4059625349854	241
HG	56047990	4059625349847	241
HG	56050000	4059625349816	241
HG	56050140	4059625349809	241
HG	56050340	4059625349793	241
HG	56050670	4059625349786	241
HG	56050700	4059625349779	241
HG	56050800	4059625349762	241
HG	56050990	4059625349755	241
HG	56051000	4059625349748	242
HG	56051140	4059625349731	242
HG	56051340	4059625349724	242
HG	56051670	4059625349717	242
HG	56051700	4059625349700	242
HG	56051800	4059625349694	242
HG	56051990	4059625349687	242
HG	56052000	4059625349670	242
HG	56052140	4059625349663	242
HG	56052340	4059625349656	242

Code Numbers (HG = hansgrohe, AX = AXOR)

brand	Code no.	EAN	page
HG	56052670	4059625349649	242
HG	56052700	4059625349632	242
HG	56052800	4059625349625	242
HG	56052990	4059625349618	242
HG	56053000	4059625349601	242
HG	56053140	4059625349595	242
HG	56053340	4059625349588	242
HG	56053670	4059625349571	242
HG	56053700	4059625349564	242
HG	56053800	4059625349557	242
HG	56053990	4059625349540	242
HG	56054000	4059625349533	242
HG	56054140	4059625349526	242
HG	56054340	4059625349519	242
HG	56054670	4059625349502	242
HG	56054700	4059625349496	242
HG	56054800	4059625349489	242
HG	56054990	4059625349472	242
HG	56055800	4059625349465	249
HG	56056000	4059625349441	250
HG	56057380	4059625443132	552
HG	56057670	4059625351598	552
HG	56057700	4059625351581	552
HG	56058670	4059625489420	554
HG	56058700	4059625489413	554
HG	56058800	4059625489406	554
HG	56060670	4059625489390	557
HG	56060700	4059625489383	557
HG	56060800	4059625489376	557
HG	56061380	4059625443125	552
HG	56061670	4059625351567	552
HG	56061700	4059625351550	552
HG	56063670	4059625489369	557
HG	56063700	4059625489352	557
HG	56063800	4059625489345	557
HG	56064380	4059625443149	552
HG	56064670	4059625351536	552
HG	56064700	4059625351529	552
HG	56065670	4059625430125	554
HG	56065700	4059625430118	554
HG	56065800	4059625430101	554
HG	56067380	4059625443156	553
HG	56067670	4059625351505	553
HG	56067700	4059625351499	553
HG	56070670	4059625351475	555
HG	56070700	4059625351468	555
HG	56070800	4059625351451	555
HG	56073670	4059625351444	555
HG	56073700	4059625351437	555
HG	56073800	4059625351420	555
HG	56076670	4059625351413	555
HG	56076700	4059625351406	555
HG	56076800	4059625351390	555
HG	56079670	4059625351383	555
HG	56079700	4059625351376	555
HG	56079800	4059625351369	555
HG	56082670	4059625351352	556
HG	56082700	4059625351345	556
HG	56082800	4059625351338	556
HG	56085670	4059625351321	556
HG	56085700	4059625351314	556

brand	Code no.	EAN	page
HG	56085800	4059625351307	556
HG	56088670	4059625351291	556
HG	56088700	4059625351284	556
HG	56088800	4059625351277	556
HG	56089670	4059625489338	558
HG	56089700	4059625489321	558
HG	56089800	4059625489314	558
HG	56090670	4059625489307	558
HG	56090700	4059625488799	558
HG	56090800	4059625488782	558
HG	56091670	4059625351260	557
HG	56091700	4059625351253	557
HG	56091800	4059625351246	557
HG	56092380	4059625445921	553
HG	56092670	4059625430095	553
HG	56092700	4059625430088	553
HG	56093380	4059625445938	553
HG	56093670	4059625430064	553
HG	56093700	4059625430057	553
HG	56094140	4059625349069	559
HG	56094340	4059625349052	559
HG	56094670	4059625349045	559
HG	56094700	4059625349038	559
HG	56094800	4059625349021	559
HG	56094990	4059625349014	559
HG	56095140	4059625349007	559
HG	56095340	4059625348994	559
HG	56095670	4059625348987	559
HG	56095700	4059625348970	559
HG	56095800	4059625348963	559
HG	56095990	4059625348956	559
HG	56096140	4059625348949	559
HG	56096340	4059625348932	559
HG	56096670	4059625348925	559
HG	56096700	4059625348918	559
HG	56096800	4059625348901	559
HG	56096990	4059625348895	559
HG	56097140	4059625348888	559
HG	56097340	4059625348871	559
HG	56097670	4059625348864	559
HG	56097700	4059625348857	559
HG	56097800	4059625348840	559
HG	56097990	4059625348833	559
HG	56098140	4059625348826	560
HG	56098340	4059625348819	560
HG	56098670	4059625348802	560
HG	56098700	4059625348796	560
HG	56098800	4059625348789	560
HG	56098990	4059625348772	560
HG	56099140	4059625348765	560
HG	56099340	4059625348758	560
HG	56099670	4059625348741	560
HG	56099700	4059625348734	560
HG	56099800	4059625348727	560
HG	56099990	4059625348710	560
HG	56100800	4059625351239	560
HG	56112800	4059625348697	250
HG	56162800	4059625430033	248
HG	56163000	4059625430026	249
HG	56164800	4059625430019	248
HG	56165000	4059625430002	249

brand	Code no.	EAN	page
HG	56166800	4059625429990	248
HG	56167000	4059625429983	249
HG	56168800	4059625429976	248
HG	56169000	4059625429969	249
HG	56170800	4059625429952	248
HG	56171000	4059625429945	249
HG	56172800	4059625429938	248
HG	56173000	4059625429921	249
HG	56196800	4059625429747	247
HG	56197800	4059625429730	247
HG	56198800	4059625429723	247
HG	56199800	4059625429716	247
HG	56200800	4059625429709	247
HG	56201800	4059625429693	247
HG	56246800	4059625429686	251
HG	56247670	4059625429679	251
HG	56247800	4059625429662	251
HG	56248800	4059625429655	251
HG	56249670	4059625429648	252
HG	56249800	4059625429631	252
HG	56256000	4059625512173	252
HG	56373000	4011097125282	262
58			
HG	58112000	4011097651804	264
HG	58113000	4011097423913	267
HG	58115180	4011097433103	266
HG	58116180	4011097433110	267
HG	58117000	4011097417479	264
HG	58117340	4059625002599	264
HG	58117670	4059625235683	264
HG	58117700	4059625235676	264
HG	58117820	4011097516615	264
HG	58117990	4059625004050	264
HG	58123000	4011097363363	266
HG	58125180	4011097140223	265
HG	58126180	4011097140230	265
HG	58127000	4011097140247	263
HG	58128000	4011097140353	263
HG	58141180	4011097233574	261
HG	58143000	4011097232874	261
HG	58150000	4011097492650	262
HG	58185000	4011097233581	260
HG	58185140	4059625243985	260
HG	58185340	4059625243992	260
HG	58185670	4059625244203	260
HG	58185700	4059625244210	260
HG	58185990	4059625178706	260
HG	58186000	4011097440347	260
HG	58192000	4011097412955	268
60			
HG	60056000	4011097609751	253
HG	60067000	4011097557694	253
HG	60151450	4059625475126	613
HG	60152450	4059625475164	620
HG	60153450	4059625475201	624
HG	60154450	4059625475249	617
HG	60155450	4059625475287	612
HG	60156450	4059625475324	619
HG	60157450	4059625475362	622
HG	60158450	4059625475409	616
HG	60159450	4059625475447	612

brand	Code no.	EAN	page
HG	60160450	4059625475485	620
HG	60161450	4059625475522	623
HG	60162450	4059625475560	616
HG	60163450	4059625475607	610
HG	60164450	4059625475621	610
HG	60165450	4059625475645	618
HG	60166450	4059625475669	621
HG	60167450	4059625475683	614
HG	60168450	4059625475706	614
HG	60169450	4059625475720	611
HG	60170450	4059625475768	619
HG	60171450	4059625475805	622
HG	60172450	4059625475843	615
61			
HG	61046450	4059625475133	613
HG	61048450	4059625475171	621
HG	61050450	4059625475218	624
HG	61052450	4059625475256	617
HG	61054450	4059625475294	612
HG	61056450	4059625475454	613
HG	61058450	4059625475331	619
HG	61060450	4059625475492	620
HG	61062450	4059625475379	623
HG	61064450	4059625475539	623
HG	61066450	4059625475416	616
HG	61068450	4059625475577	617
HG	61070450	4059625475614	610
HG	61071450	4059625475638	611
HG	61072450	4059625475652	618
HG	61073450	4059625475676	621
HG	61074450	4059625475690	614
HG	61075450	4059625475713	615
HG	61076450	4059625475737	611
HG	61078450	4059625475775	619
HG	61080450	4059625475812	622
HG	61082450	4059625475850	615
71			
HG	71070000	4011097738710	512
HG	71071000	4011097738703	512
HG	71072000	4011097738697	512
HG	71073000	4011097738680	512
HG	71075000	4011097738666	514
HG	71076000	4011097738659	514
HG	71077000	4011097738642	512
HG	71078000	4011097753812	513
HG	71090000	4011097738628	512
HG	71091000	4011097738611	512
HG	71095000	4011097738604	514
HG	71100000	4011097738581	512
HG	71101000	4011097738574	512
HG	71102000	4011097738567	512
HG	71103000	4011097738550	512
HG	71104000	4011097753829	513
HG	71105000	4011097738543	514
HG	71107000	4011097738529	512
HG	71120000	4011097738499	516
HG	71130000	4011097738482	515
HG	71131000	4011097738475	515
HG	71133000	4011097738468	516
HG	71170000	4011097783475	512
HG	71171000	4011097783482	512

Code Numbers (HG = hansgrohe, AX = AXOR)

brand	Code no.	EAN	page
HG	71201000	4059625395318	519
HG	71203000	4059625076873	518
HG	71204000	4011097753836	518
HG	71220000	4011097738420	517
HG	71221000	4011097738413	515
HG	71222000	4011097738406	515
HG	71225000	4011097769981	518
HG	71251000	4059625356210	514
HG	71252000	4059625356180	514
HG	71253000	4059625356173	514
HG	71254000	4059625356135	514
HG	71255000	4059625356128	514
HG	71256000	4059625356111	517
HG	71257000	4059625356067	514
HG	71258000	4059625356036	514
HG	71286000	4011097754024	699
HG	71290000	4011097738352	519
HG	71310000	4011097738338	524
HG	71311000	4011097738321	523
HG	71312000	4011097738314	523
HG	71313000	4011097738307	525
HG	71314000	4011097738291	525
HG	71315000	4011097738284	524
HG	71400000	4011097738260	520
HG	71401000	4011097738253	520
HG	71402000	4011097789507	520
HG	71405000	4011097738246	521
HG	71406000	4011097738239	521
HG	71409000	4059625062463	522
HG	71410000	4011097738222	474
HG	71420007	4059625252246	536
HG	71420677	4059625326435	536
HG	71430000	4011097738215	520
HG	71440007	4059625252222	535
HG	71440677	4059625326404	535
HG	71441007	4059625252369	537
HG	71441677	4059625326398	537
HG	71445007	4059625252345	536
HG	71449007	4059625293485	535
HG	71449677	4059625326367	535
HG	71450007	4059625252284	541
HG	71450677	4059625326336	541
HG	71451007	4059625252420	544
HG	71451677	4059625326329	544
HG	71455007	4059625252406	543
HG	71458007	4059625293539	542
HG	71458677	4059625326299	542
HG	71460007	4059625252307	543
HG	71460677	4059625326275	543
HG	71465187	4059625293492	357
HG	71501007	4059625357057	534
HG	71502007	4059625357071	534
HG	71503007	4059625357095	534
HG	71504007	4059625357118	534
HG	71550677	4059625326251	530
HG	71551007	4059625252468	530
HG	71551677	4059625326237	530
HG	71552007	4059625252475	530
HG	71552677	4059625326213	530
HG	71553007	4059625252314	532
HG	71553677	4059625326176	532

brand	Code no.	EAN	page
HG	71554007	4059625252321	532
HG	71555007	4059625252338	533
HG	71556007	4059625282045	359
HG	71560007	4059625252253	539
HG	71560677	4059625326145	539
HG	71561007	4059625252260	539
HG	71561677	4059625326121	539
HG	71562007	4059625252277	539
HG	71562677	4059625326107	539
HG	71563007	4059625252376	540
HG	71563677	4059625326060	540
HG	71564007	4059625252383	540
HG	71570007	4059625250198	531
HG	71571007	4059625252208	531
HG	71572007	4059625252215	531
HG	71576007	4059625293461	533
HG	71576677	4059625325926	533
HG	71577187	4059625293478	353
HG	71578007	4059625293522	541
HG	71578677	4059625325902	541
HG	71600000	4011097737799	526
HG	71604000	4059625194157	527
HG	71605000	4011097737775	526
HG	71606000	4011097737768	527
HG	71607000	4011097754581	527
HG	71640007	4059625252239	537
HG	71640677	4059625325773	537
HG	71645007	4059625252352	538
HG	71649007	4059625293508	538
HG	71649677	4059625325766	538
HG	71650007	4059625252291	544
HG	71650677	4059625325742	544
HG	71651187	4059625293515	358
HG	71658007	4059625293546	545
HG	71658677	4059625325735	545
HG	71666000	4011097769936	528
HG	71700000	4011097770703	467
HG	71701000	4011097770697	467
HG	71702000	4011097770680	467
HG	71703000	4011097770673	467
HG	71704000	4011097770666	467
HG	71705000	4011097770659	469
HG	71706000	4011097770642	470
HG	71707000	4011097770772	469
HG	71710000	4011097770765	468
HG	71710140	4059625232026	468
HG	71710340	4059625229521	468
HG	71710670	4059625232033	468
HG	71710700	4059625232040	468
HG	71710990	4059625232057	468
HG	71711000	4011097770758	468
HG	71712000	4011097770741	468
HG	71712140	4059625265789	468
HG	71712340	4059625147054	468
HG	71712670	4059625265765	468
HG	71712700	4059625265772	468
HG	71712990	4059625035573	468
HG	71713000	4011097770734	467
HG	71713140	4059625232064	467
HG	71713340	4059625232071	467
HG	71713670	4059625232088	467

brand	Code no.	EAN	page
HG	71713700	4059625232095	467
HG	71713990	4059625232101	467
HG	71714000	4011097770727	467
HG	71714140	4059625265833	467
HG	71714340	4059625265819	467
HG	71714670	4059625265796	467
HG	71714700	4059625265802	467
HG	71714990	4059625265826	467
HG	71715000	4011097778495	469
HG	71716000	4011097770710	468
HG	71716140	4059625232118	468
HG	71716340	4059625229538	468
HG	71716670	4059625232125	468
HG	71716700	4059625232132	468
HG	71716990	4059625232149	468
HG	71717000	4011097770826	468
HG	71717140	4059625265871	468
HG	71717340	4059625198001	468
HG	71717670	4059625265840	468
HG	71717700	4059625265857	468
HG	71717990	4059625265864	468
HG	71718000	4059625338841	466
HG	71719000	4059625338827	466
HG	71720140	4059625250457	472
HG	71720340	4059625250440	472
HG	71720670	4059625250433	472
HG	71720700	4059625250426	472
HG	71720990	4059625250419	472
HG	71721000	4011097770802	472
HG	71729000	4011097770796	472
HG	71730000	4011097782409	475
HG	71731000	4011097782393	476
HG	71732000	4011097770789	471
HG	71733000	4011097770871	470
HG	71733140	4059625232156	470
HG	71733340	4059625229545	470
HG	71733670	4059625232163	470
HG	71733700	4059625232170	470
HG	71734000	4011097778457	471
HG	71734140	4059625232187	471
HG	71734340	4059625232194	471
HG	71734670	4059625232200	471
HG	71734700	4059625232217	471
HG	71740000	4011097770864	473
HG	71740140	4059625232231	473
HG	71740340	4059625221754	473
HG	71740670	4059625232248	473
HG	71740700	4059625232255	473
HG	71740990	4059625232262	473
HG	71745000	4011097770840	473
HG	71745140	4059625232279	473
HG	71745340	4059625232286	473
HG	71745670	4059625232293	473
HG	71745700	4059625232309	473
HG	71745990	4059625232316	473
HG	71746000	4011097770833	474
HG	71747000	4011097791395	475
HG	71748000	4011097788807	476
HG	71748140	4059625232323	476
HG	71748340	4059625232330	476
HG	71748670	4059625232347	476

brand	Code no.	EAN	page
HG	71748700	4059625232354	476
HG	71748990	4059625232361	476
HG	71750000	4011097782379	466
HG	71751000	4011097775791	466
HG	71752000	4011097782416	466
HG	71753000	4011097775784	466
HG	71754000	4011097782355	469
HG	71754140	4059625246429	469
HG	71754340	4059625246412	469
HG	71754670	4059625246443	469
HG	71754700	4059625246450	469
HG	71754990	4059625246436	469
HG	71755000	4011097782348	469
HG	71760000	4011097770918	477
HG	71760140	4059625232378	477
HG	71760340	4059625232385	477
HG	71760670	4059625232392	477
HG	71760700	4059625232408	477
HG	71760990	4059625232415	477
HG	71764000	4059625194119	478
HG	71764670	4059625410523	478
HG	71765000	4011097778327	477
HG	71765140	4059625232422	477
HG	71765340	4059625147061	477
HG	71765670	4059625232439	477
HG	71765700	4059625232446	477
HG	71765990	4059625232453	477
HG	71766000	4011097770895	478
HG	71768000	4011097778310	478
HG	71800000	4059625085127	685
HG	71801000	4059625085103	685
HG	71801800	4059625085097	685
HG	71802000	4059625085080	685
HG	71804000	4059625085059	687
HG	71805000	4059625085042	686
HG	71806000	4059625085035	686
HG	71806800	4059625085028	686
HG	71807000	4059625085011	688
HG	71808000	4059625085004	686
HG	71808800	4059625084991	686
HG	71809000	4059625084984	686
HG	71814000	4059625098356	688
HG	71814800	4059625098363	688
HG	71820000	4059625098370	685
HG	71829000	4059625098417	688
HG	71829800	4059625098424	688
HG	71830000	4011097761268	696
HG	71831000	4011097766461	698
HG	71832000	4011097766454	696
HG	71833000	4011097775487	697
HG	71835000	4011097766430	696
HG	71836000	4011097766423	698
HG	71837000	4011097766416	697
HG	71839000	4011097775753	697
HG	71857007	4059625252437	702
HG	71857677	4059625325728	702
HG	71858007	4059625252444	703
HG	71858677	4059625325711	703
HG	71861000	4059625196755	696
HG	71862000	4059625198490	685
HG	71864000	4059625198513	687

Code Numbers (HG = hansgrohe, AX = AXOR)

brand	Code no.	EAN	page
HG	71865000	4059625198520	688
HG	71866000	4059625198537	687
HG	71870000	4059625321362	702
HG	71870670	4059625325698	702
HG	71871000	4059625321355	702
HG	71871670	4059625325674	702
HG	71962007	4059625281970	360
HG	71963007	4059625281963	360
HG	71970000	4011097737737	333
72			
HG	72010000	4011097770048	451
HG	72011000	4011097770116	451
HG	72012000	4011097770109	451
HG	72013000	4011097770093	451
HG	72014000	4011097770086	451
HG	72017000	4011097770055	453
HG	72020000	4011097770161	451
HG	72021000	4011097770154	451
HG	72022000	4011097770147	451
HG	72023000	4011097770130	451
HG	72025000	4011097775708	452
HG	72031000	4011097770246	451
HG	72032000	4011097770239	451
HG	72040000	4011097770222	450
HG	72041000	4011097770215	450
HG	72042000	4011097770208	450
HG	72043000	4011097770192	450
HG	72044000	4011097770185	450
HG	72045000	4011097770178	450
HG	72105000	4011097770307	453
HG	72110000	4011097770291	454
HG	72111000	4011097770284	454
HG	72113000	4011097782546	452
HG	72116000	4011097782515	452
HG	72200000	4011097770260	454
HG	72215000	4059625413036	497
HG	72215670	4059625419595	497
HG	72290000	4011097770253	455
HG	72400000	4011097770383	456
HG	72401000	4011097770376	456
HG	72405000	4011097770352	456
HG	72406000	4011097770345	456
HG	72410000	4011097770420	457
HG	72412000	4011097782508	455
HG	72416000	4011097770314	457
HG	72417000	4011097770413	458
HG	72419000	4011097770390	458
HG	72430000	4059625412978	501
HG	72430670	4059625412961	501
HG	72431000	4059625412954	508
HG	72431670	4059625412947	508
HG	72440000	4059625402122	499
HG	72440670	4059625402115	499
HG	72444007	4059625437711	502
HG	72444677	4059625444726	502
HG	72448000	4059625412862	501
HG	72448670	4059625412855	501
HG	72449000	4059625412848	500
HG	72449670	4059625412831	500
HG	72450000	4059625402078	506
HG	72450670	4059625402061	506

brand	Code no.	EAN	page
HG	72454007	4059625437735	509
HG	72454677	4059625444740	509
HG	72458000	4059625412817	508
HG	72458670	4059625412800	508
HG	72459000	4059625412794	507
HG	72459670	4059625412787	507
HG	72466000	4059625402047	500
HG	72466007	4059625437742	500
HG	72466670	4059625402030	500
HG	72466677	4059625442142	500
HG	72468000	4059625402023	507
HG	72468007	4059625437759	507
HG	72468670	4059625402016	507
HG	72468677	4059625442272	507
HG	72503000	4059625402399	498
HG	72503670	4059625402382	498
HG	72506000	4059625412732	505
HG	72506670	4059625412725	505
HG	72510000	4059625402375	496
HG	72513000	4059625402337	496
HG	72513670	4059625402320	496
HG	72514000	4059625412695	496
HG	72517000	4059625402290	496
HG	72517007	4059625420515	497
HG	72517670	4059625402283	496
HG	72517677	4059625420492	497
HG	72519000	4059625402276	496
HG	72519670	4059625402269	496
HG	72520000	4059625412657	496
HG	72520670	4059625412640	496
HG	72523007	4059625420393	497
HG	72523677	4059625420386	497
HG	72527000	4059625437919	496
HG	72527670	4059625402207	496
HG	72528000	4059625412619	499
HG	72528670	4059625412602	499
HG	72530000	4059625412596	498
HG	72536000	4059625401699	497
HG	72536670	4059625401682	497
HG	72550000	4059625402009	504
HG	72551000	4059625412565	504
HG	72551670	4059625412558	504
HG	72553000	4059625401989	504
HG	72553670	4059625401972	504
HG	72554000	4059625412527	504
HG	72554670	4059625412510	504
HG	72557000	4059625401941	504
HG	72557670	4059625401934	504
HG	72559000	4059625401927	504
HG	72559007	4059625419823	505
HG	72559670	4059625401910	504
HG	72559677	4059625419816	505
HG	72560000	4059625412480	504
HG	72560670	4059625412473	504
HG	72563007	4059625419779	505
HG	72563677	4059625419762	505
HG	72568000	4059625412442	506
HG	72568670	4059625412435	506
HG	72576000	4059625401873	505
HG	72576670	4059625401866	505
HG	72580000	4059625418512	496

brand	Code no.	EAN	page
HG	72580670	4059625418505	496
HG	72581000	4059625418499	504
HG	72581670	4059625418482	504
HG	72582000	4059625418475	496
HG	72583000	4059625418468	505
HG	72584000	4059625418451	496
HG	72584670	4059625418444	496
HG	72585000	4059625418437	504
HG	72585670	4059625418420	504
HG	72586000	4059625418413	496
HG	72586670	4059625418406	496
HG	72587000	4059625418390	504
HG	72587670	4059625418383	504
HG	72588000	4059625418376	496
HG	72588670	4059625418369	496
HG	72589000	4059625418352	504
HG	72589670	4059625418345	504
HG	72590000	4059625418338	496
HG	72590670	4059625418321	496
HG	72591000	4059625418314	504
HG	72591670	4059625418307	504
HG	72600000	4011097770475	459
HG	72605000	4011097770444	459
HG	72606000	4011097770437	460
HG	72640000	4059625401859	502
HG	72640670	4059625401842	502
HG	72648000	4059625412404	503
HG	72648670	4059625412398	503
HG	72649000	4059625412381	503
HG	72649670	4059625412374	503
HG	72650000	4059625401804	509
HG	72650670	4059625401798	509
HG	72658000	4059625412367	510
HG	72658670	4059625412350	510
HG	72659000	4059625412343	510
HG	72659670	4059625412336	510
HG	72667000	4059625401774	502
HG	72667007	4059625437780	503
HG	72667670	4059625401767	502
HG	72667677	4059625442197	503
HG	72668000	4059625401750	509
HG	72668007	4059625437797	510
HG	72668670	4059625401743	509
HG	72668677	4059625442241	510
HG	72800000	4059625255452	671
HG	72800340	4059625446102	671
HG	72800670	4059625255445	671
HG	72800800	4059625255438	671
HG	72801000	4059625255421	671
HG	72801340	4059625446119	671
HG	72801670	4059625255414	671
HG	72801800	4059625255407	671
HG	72802000	4059625255391	672
HG	72802670	4059625255384	672
HG	72802800	4059625255377	672
HG	72803000	4059625255360	672
HG	72803670	4059625255353	672
HG	72803800	4059625255346	672
HG	72804000	4059625255339	673
HG	72804670	4059625255322	673
HG	72804800	4059625255315	673

brand	Code no.	EAN	page
HG	72806000	4059625255308	673
HG	72806670	4059625255292	673
HG	72806800	4059625255285	673
HG	72808000	4059625255278	674
HG	72808340	4059625405017	674
HG	72808670	4059625255261	674
HG	72808800	4059625255254	674
HG	72809000	4059625255247	674
HG	72809340	4059625407998	674
HG	72809670	4059625255230	674
HG	72809800	4059625255223	674
HG	72810000	4011097772455	669
HG	72810800	4011097772462	669
HG	72812000	4011097772479	669
HG	72813000	4011097772493	668
HG	72813800	4011097772707	668
HG	72814000	4011097823621	669
HG	72814800	4011097823614	669
HG	72815000	4011097823607	668
HG	72815800	4011097823591	668
HG	72816000	4059625198155	669
HG	72817000	4059625197981	668
HG	72820000	4011097772721	667
HG	72820800	4011097772738	667
HG	72821000	4011097772752	667
HG	72821800	4011097772769	667
HG	72822800	4011097823577	667
HG	72823000	4059625255667	666
HG	72823800	4059625255650	666
HG	72824000	4059625255643	666
HG	72824800	4059625255636	666
HG	72825000	4059625198186	667
HG	72826000	4059625198209	667
HG	72840000	4059625255216	675
HG	72840340	4059625446126	675
HG	72840670	4059625255209	675
HG	72840800	4059625255193	675
HG	72841000	4059625293218	705
HG	72841670	4059625293225	705
HG	72841800	4059625293232	705
HG	72842000	4059625269909	671
HG	72842670	4059625269695	671
HG	72843000	4059625269688	673
HG	72843670	4059625269671	673
HG	72844000	4059625269664	673
HG	72844670	4059625269657	673
HG	72845000	4059625269640	674
HG	72845670	4059625269633	674
73			
HG	73001000	4059625473658	431
HG	73001140	4059625473641	431
HG	73001670	4059625473634	431
HG	73001700	4059625473627	431
HG	73002000	4059625473610	431
HG	73002140	4059625473597	431
HG	73002670	4059625473580	431
HG	73002700	4059625473566	431
HG	73004000	4059625507803	431
HG	73004140	4059625526699	431
HG	73004670	4059625526682	431
HG	73004700	4059625526675	431

Code Numbers (HG = hansgrohe, AX = AXOR)

brand	Code no.	EAN	page
HG	73010000	4059625473504	431
HG	73010140	4059625473498	431
HG	73010670	4059625473481	431
HG	73010700	4059625473474	431
HG	73011000	4059625473467	431
HG	73011140	4059625473450	431
HG	73011670	4059625473443	431
HG	73011700	4059625473436	431
HG	73012000	4059625473429	431
HG	73012140	4059625473412	431
HG	73012670	4059625473405	431
HG	73012700	4059625473399	431
HG	73013000	4059625473382	432
HG	73013140	4059625473375	432
HG	73013670	4059625473368	432
HG	73013700	4059625473955	432
HG	73014000	4059625473948	431
HG	73014140	4059625473924	431
HG	73014670	4059625473917	431
HG	73014700	4059625473894	431
HG	73016000	4059625526668	432
HG	73016140	4059625526651	432
HG	73016670	4059625526644	432
HG	73016700	4059625526637	432
HG	73018000	4059625507810	431
HG	73018140	4059625526620	431
HG	73018670	4059625526613	431
HG	73018700	4059625526606	431
HG	73020000	4059625473832	428
HG	73020140	4059625473825	428
HG	73020670	4059625473818	428
HG	73020700	4059625473801	428
HG	73021000	4059625473795	428
HG	73021140	4059625473771	428
HG	73021670	4059625473764	428
HG	73021700	4059625473740	428
HG	73023000	4059625473726	428
HG	73023140	4059625473719	428
HG	73023670	4059625473702	428
HG	73023700	4059625473696	428
HG	73024000	4059625507827	428
HG	73024140	4059625526590	428
HG	73024670	4059625526583	428
HG	73024700	4059625526576	428
HG	73030000	4059625483435	430
HG	73030140	4059625483428	430
HG	73030670	4059625483411	430
HG	73030700	4059625483404	430
HG	73040000	4059625474242	428
HG	73040140	4059625474235	428
HG	73040670	4059625474228	428
HG	73040700	4059625474211	428
HG	73041000	4059625474204	428
HG	73041140	4059625474198	428
HG	73041670	4059625474181	428
HG	73041700	4059625474174	428
HG	73042000	4059625526569	429
HG	73042140	4059625526552	429
HG	73042670	4059625526545	429
HG	73042700	4059625526538	429
HG	73051000	4059625483312	433

brand	Code no.	EAN	page
HG	73051140	4059625483305	433
HG	73051670	4059625483299	433
HG	73051700	4059625483282	433
HG	73053000	4059625471067	430
HG	73053140	4059625471050	430
HG	73053670	4059625471043	430
HG	73053700	4059625471036	430
HG	73060000	4059625474129	429
HG	73060140	4059625474112	429
HG	73060670	4059625474105	429
HG	73060700	4059625474099	429
HG	73063000	4059625507841	429
HG	73063140	4059625526521	429
HG	73063670	4059625526514	429
HG	73063700	4059625526507	429
HG	73070000	4059625474044	429
HG	73070140	4059625474037	429
HG	73070670	4059625474020	429
HG	73070700	4059625474013	429
HG	73072000	4059625474006	429
HG	73072140	4059625473986	429
HG	73072670	4059625473979	429
HG	73072700	4059625474556	429
HG	73073000	4059625507834	429
HG	73073140	4059625525494	429
HG	73073670	4059625525487	429
HG	73073700	4059625525470	429
HG	73200000	4059625474495	433
HG	73200140	4059625474488	433
HG	73200670	4059625474471	433
HG	73200700	4059625474464	433
HG	73201000	4059625471029	424
HG	73201140	4059625474457	424
HG	73201670	4059625472163	424
HG	73201700	4059625472156	424
HG	73210000	4059625474440	432
HG	73210670	4059625474433	432
HG	73211000	4059625471012	422
HG	73211670	4059625472149	422
HG	73301000	4059625471005	421
HG	73301140	4059625474426	421
HG	73301670	4059625472132	421
HG	73301700	4059625472125	421
HG	73302000	4059625470992	421
HG	73302140	4059625474402	421
HG	73302670	4059625472118	421
HG	73302700	4059625472101	421
HG	73305000	4059625507056	421
HG	73305140	4059625525463	421
HG	73305670	4059625526910	421
HG	73305700	4059625526903	421
HG	73310000	4059625470985	422
HG	73310140	4059625474334	422
HG	73310670	4059625472095	422
HG	73310700	4059625472088	422
HG	73311000	4059625470978	422
HG	73311140	4059625474327	422
HG	73311670	4059625472071	422
HG	73311700	4059625472064	422
HG	73312000	4059625470961	422
HG	73312140	4059625474310	422

brand	Code no.	EAN	page
HG	73312670	4059625472057	422
HG	73312700	4059625472040	422
HG	73313000	4059625470954	423
HG	73313140	4059625474303	423
HG	73313670	4059625472033	423
HG	73313700	4059625472026	423
HG	73314000	4059625470947	422
HG	73314007	4059625504703	422
HG	73314140	4059625474280	422
HG	73314670	4059625472019	422
HG	73314700	4059625472002	422
HG	73317000	4059625507063	422
HG	73317140	4059625526897	422
HG	73317670	4059625526880	422
HG	73317700	4059625526873	422
HG	73318000	4059625526866	422
HG	73318140	4059625526859	422
HG	73318670	4059625526842	422
HG	73318700	4059625526835	422
HG	73320000	4059625470930	418
HG	73320007	4059625504932	419
HG	73320140	4059625474815	418
HG	73320670	4059625471999	418
HG	73320700	4059625471982	418
HG	73321000	4059625474808	418
HG	73321140	4059625474785	418
HG	73321670	4059625474778	418
HG	73321700	4059625474754	418
HG	73322000	4059625507070	418
HG	73322140	4059625526828	418
HG	73322670	4059625526811	418
HG	73322700	4059625526804	418
HG	73323000	4059625470923	418
HG	73323140	4059625474730	418
HG	73323670	4059625471975	418
HG	73323700	4059625471968	418
HG	73330000	4059625470916	421
HG	73330140	4059625470909	421
HG	73330670	4059625470893	421
HG	73330700	4059625470886	421
HG	73340000	4059625470831	418
HG	73340140	4059625474686	418
HG	73340670	4059625471951	418
HG	73340700	4059625471944	418
HG	73341000	4059625470824	419
HG	73341140	4059625474679	419
HG	73341670	4059625471937	419
HG	73341700	4059625471920	419
HG	73342000	4059625526798	419
HG	73342140	4059625526781	419
HG	73342670	4059625526774	419
HG	73342700	4059625526767	419
HG	73350000	4059625470817	423
HG	73350140	4059625470800	423
HG	73350670	4059625470794	423
HG	73350700	4059625470787	423
HG	73351000	4059625470770	423
HG	73351140	4059625470763	423
HG	73351670	4059625470756	423
HG	73351700	4059625470749	423
HG	73353000	4059625470732	420

brand	Code no.	EAN	page
HG	73353140	4059625470725	420
HG	73353670	4059625470718	420
HG	73353700	4059625470701	420
HG	73360000	4059625474624	420
HG	73360140	4059625474617	420
HG	73360670	4059625474600	420
HG	73360700	4059625474594	420
HG	73364000	4059625507094	420
HG	73364140	4059625526750	420
HG	73364670	4059625526743	420
HG	73364700	4059625526736	420
HG	73370000	4059625475102	419
HG	73370007	4059625505038	419
HG	73370140	4059625475096	419
HG	73370670	4059625475089	419
HG	73370700	4059625475072	419
HG	73372000	4059625475065	419
HG	73372140	4059625475041	419
HG	73372670	4059625475034	419
HG	73372700	4059625475010	419
HG	73373000	4059625507087	419
HG	73373140	4059625526729	419
HG	73373670	4059625526712	419
HG	73373700	4059625526705	419
HG	73410000	4059625470619	435
HG	73410140	4059625483220	435
HG	73410670	4059625483213	435
HG	73410700	4059625483190	435
HG	73411000	4059625470602	426
HG	73411140	4059625470596	426
HG	73411670	4059625470589	426
HG	73411700	4059625470572	426
HG	73420000	4059625474952	434
HG	73420140	4059625474945	434
HG	73420670	4059625474938	434
HG	73420700	4059625474921	434
HG	73422000	4059625470565	425
HG	73422140	4059625474914	425
HG	73422670	4059625470558	425
HG	73422700	4059625470541	425
HG	73440000	4059625470534	424
HG	73440140	4059625470527	424
HG	73440670	4059625470510	424
HG	73440700	4059625470503	424
HG	73443000	4059625483176	436
HG	73443140	4059625483169	436
HG	73443670	4059625483152	436
HG	73443700	4059625483145	436
HG	73445000	4059625471913	434
HG	73445140	4059625471906	434
HG	73445670	4059625471791	434
HG	73445700	4059625471784	434
HG	73447000	4059625470480	426
HG	73447140	4059625470473	426
HG	73447670	4059625470466	426
HG	73447700	4059625470459	426
HG	73561000	4059625131503	574
HG	73620000	4059625474907	436
HG	73620140	4059625474891	436
HG	73620670	4059625474884	436
HG	73620700	4059625474877	436

Code Numbers (HG = hansgrohe, AX = AXOR)

brand	Code no.	EAN	page
HG	73622000	4059625470404	427
HG	73622140	4059625474860	427
HG	73622670	4059625470398	427
HG	73622700	4059625470381	427
HG	73800000	4059625017630	662
HG	73800800	4059625017623	662
HG	73801000	4059625017616	662
HG	73801800	4059625017609	662
HG	73802000	4059625017593	660
HG	73802800	4059625017586	660
HG	73803000	4059625017579	660
HG	73804000	4059625017555	659
HG	73804800	4059625017548	659
HG	73807000	4059625198292	660
HG	73812000	4059625017494	663
HG	73812800	4059625017487	663
HG	73816000	4059625176221	659
HG	73816800	4059625176207	659
HG	73817000	4059625176184	659
HG	73817800	4059625176177	659
HG	73818000	4059625176160	658
HG	73818340	4059625229590	658
HG	73818670	4059625232514	658
HG	73819000	4059625255629	658
HG	73819800	4059625255612	658
HG	73820000	4059625255605	659
HG	73820800	4059625255599	659
HG	73822000	4059625255582	659
HG	73822800	4059625255575	659
HG	73823000	4059625198254	662
HG	73824000	4059625198230	662
HG	73825000	4059625198223	659
HG	73828000	4059625198278	663
HG	73830000	4059625255568	655
HG	73830670	4059625255186	655
HG	73830800	4059625255551	655
HG	73831000	4059625255179	654
HG	73831670	4059625255162	654
HG	73831800	4059625255155	654
HG	73836000	4059625269442	655
HG	73836670	4059625278093	655
HG	73836800	4059625269435	655
HG	73837000	4059625269428	654
HG	73837670	4059625278123	654
HG	73837800	4059625269411	654
HG	73850000	4059625017456	668
HG	73851000	4059625017432	668
HG	73851800	4059625017425	668
HG	73852000	4059625017418	667
HG	73852800	4059625017401	667
HG	73853000	4059625017395	667
HG	73853800	4059625017388	667
HG	73867000	4059625176085	666
HG	73867800	4059625176078	666
HG	73876000	4059625198339	668
HG	73880000	4059625017210	680
HG	73880800	4059625017203	680
HG	73895000	4059625198438	680
74			
HG	74500000	4011097813226	381
HG	74502000	4011097813202	382
HG	74506000	4011097813141	382
HG	74507000	4011097813103	382
HG	74511000	4011097813066	383
HG	74512000	4011097813028	383
HG	74515000	4011097835112	384
HG	74520000	4011097812960	386
HG	74522000	4011097812939	386
HG	74525000	4011097835105	384
HG	74526000	4011097835099	385
HG	74530000	4011097835082	385
HG	74532000	4011097835075	387
HG	74540000	4011097812915	388
HG	74545000	4011097826028	389
HG	74550000	4011097835051	391
HG	74551000	4011097835044	392
HG	74552000	4011097835037	392
HG	74560000	4011097812878	394
HG	74565000	4011097825793	394
HG	74800000	4059625339749	691
HG	74800670	4059625339763	691
HG	74800800	4059625339756	691
HG	74801000	4059625339770	691
HG	74801670	4059625339794	691
HG	74801800	4059625339787	691
HG	74802000	4059625340103	692
HG	74802670	4059625340127	692
HG	74802800	4059625340110	692
HG	74803000	4059625340134	691
HG	74803670	4059625340158	691
HG	74803800	4059625340141	691
HG	74804000	4059625340165	691
HG	74804670	4059625340189	691
HG	74804800	4059625340172	691
HG	74805000	4059625340196	693
HG	74810000	4059625340233	691
HG	74811000	4059625340240	692
HG	74813000	4059625340264	692
HG	74820000	4059625464786	690
HG	74820670	4059625464779	690
HG	74820800	4059625464762	690
HG	74821000	4059625464755	690
HG	74821670	4059625464748	690
HG	74821800	4059625464731	690
HG	74822000	4059625464724	690
HG	74822670	4059625464717	690
HG	74822800	4059625464700	690
HG	74823000	4059625462898	690
HG	74823670	4059625462881	690
HG	74823800	4059625462874	690
75			
HG	75010000	4059625335246	440
HG	75010670	4059625335208	440
HG	75010700	4059625335161	440
HG	75012000	4059625335109	440
HG	75012670	4059625335086	440
HG	75012700	4059625335062	440
HG	75013000	4059625335048	442
HG	75013670	4059625335031	442
HG	75013700	4059625335024	442
HG	75020000	4059625334980	440
HG	75020670	4059625334942	440

brand	Code no.	EAN	page
HG	75020700	4059625334904	440
HG	75022000	4059625334843	440
HG	75022670	4059625334829	440
HG	75022700	4059625334805	440
HG	75023000	4059625399835	440
HG	75023670	4059625399828	440
HG	75023700	4059625399811	440
HG	75024000	4059625399804	440
HG	75024670	4059625399699	440
HG	75024700	4059625399682	440
HG	75030000	4059625334751	441
HG	75030670	4059625335727	441
HG	75030700	4059625335697	441
HG	75032000	4059625335659	441
HG	75032670	4059625335642	441
HG	75032700	4059625335635	441
HG	75033000	4059625322710	442
HG	75033007	4059625337394	442
HG	75033670	4059625337387	442
HG	75033700	4059625337356	442
HG	75040000	4059625335598	440
HG	75040670	4059625335567	440
HG	75040700	4059625335536	440
HG	75042000	4059625335499	441
HG	75042670	4059625335468	441
HG	75042700	4059625335437	441
HG	75050000	4059625337318	443
HG	75050007	4059625337301	443
HG	75050670	4059625337295	443
HG	75050700	4059625337271	443
HG	75200000	4059625335369	443
HG	75200670	4059625335345	443
HG	75200700	4059625335321	443
HG	75410000	4059625322727	445
HG	75410670	4059625337219	445
HG	75410700	4059625337196	445
HG	75414000	4059625459737	338
HG	75414140	4059625482940	338
HG	75414670	4059625471593	338
HG	75414700	4059625471579	338
HG	75415000	4059625358504	445
HG	75415670	4059625358511	445
HG	75415700	4059625358528	445
HG	75417000	4059625471555	337
HG	75417140	4059625482933	337
HG	75417670	4059625471524	337
HG	75417700	4059625471500	337
HG	75418000	4059625471470	336
HG	75418140	4059625482926	336
HG	75418670	4059625471432	336
HG	75418700	4059625471401	336
HG	75420000	4059625335291	444
HG	75420670	4059625335260	444
HG	75420700	4059625336199	444
HG	75443007	4059625337141	446
HG	75444000	4059625322703	446
HG	75444670	4059625337080	446
HG	75444700	4059625337073	446
HG	75445000	4059625322697	444
HG	75445670	4059625337035	444
HG	75445700	4059625336991	444

brand	Code no.	EAN	page
HG	75614000	4059625471289	338
HG	75614140	4059625482889	338
HG	75614670	4059625471272	338
HG	75614700	4059625471265	338
HG	75615000	4059625358566	447
HG	75615670	4059625358573	447
HG	75615700	4059625358580	447
HG	75617000	4059625471258	337
HG	75617140	4059625482872	337
HG	75617670	4059625471241	337
HG	75617700	4059625471234	337
HG	75618000	4059625471227	336
HG	75618140	4059625482865	336
HG	75618670	4059625471197	336
HG	75618700	4059625471173	336
HG	75620000	4059625336151	447
HG	75620670	4059625336137	447
HG	75620700	4059625336113	447
76			
HG	76010000	4059625336083	408
HG	76010670	4059625334430	408
HG	76010700	4059625334447	408
HG	76013000	4059625335932	410
HG	76013670	4059625335925	410
HG	76013700	4059625335918	410
HG	76020000	4059625335871	408
HG	76020670	4059625334423	408
HG	76020700	4059625334416	408
HG	76023000	4059625335758	408
HG	76023670	4059625334409	408
HG	76023700	4059625334393	408
HG	76024000	4059625334461	408
HG	76024670	4059625334386	408
HG	76024700	4059625334379	408
HG	76033000	4059625338124	410
HG	76033670	4059625338094	410
HG	76033700	4059625338063	410
HG	76034000	4059625338025	410
HG	76034670	4059625337998	410
HG	76034700	4059625337967	410
HG	76050000	4059625337929	411
HG	76050670	4059625337899	411
HG	76050700	4059625337868	411
HG	76051000	4059625337820	411
HG	76051670	4059625337813	411
HG	76051700	4059625337806	411
HG	76060000	4059625336564	409
HG	76060670	4059625336557	409
HG	76060700	4059625336540	409
HG	76063000	4059625336533	409
HG	76063670	4059625336496	409
HG	76063700	4059625336441	409
HG	76070000	4059625334454	408
HG	76070670	4059625334362	408
HG	76070700	4059625334355	408
HG	76200000	4059625336823	411
HG	76200670	4059625336816	411
HG	76200700	4059625336809	411
HG	76410000	4059625337738	413
HG	76410670	4059625337714	413
HG	76410700	4059625337691	413

Code Numbers (HG = hansgrohe, AX = AXOR)

brand	Code no.	EAN	page
HG	76415000	4059625357637	413
HG	76415670	4059625357644	413
HG	76415700	4059625357651	413
HG	76420000	4059625336793	412
HG	76420670	4059625336762	412
HG	76420700	4059625336731	412
HG	76444000	4059625337592	414
HG	76444670	4059625337585	414
HG	76444700	4059625337578	414
HG	76445000	4059625322734	412
HG	76445670	4059625337530	412
HG	76445700	4059625337493	412
HG	76615000	4059625357606	415
HG	76615670	4059625357613	415
HG	76615700	4059625357620	415
HG	76620000	4059625336694	414
HG	76620670	4059625336670	414
HG	76620700	4059625336656	414
92			
HG	92017000	4011097143477	763
HG	92175000	4011097739007	765
HG	92219000	4011097742113	764
HG	92373000	4011097767062	755
HG	92571450	4011097780931	319
HG	92571610	4011097781136	319
HG	92572450	4011097780948	319
HG	92572610	4011097781143	319
HG	92573450	4011097780955	319
HG	92573610	4011097781204	319
HG	92574450	4011097780979	319
HG	92574610	4011097781167	319
HG	92575450	4011097780986	320
HG	92575610	4011097781174	320
HG	92576450	4011097780993	320
HG	92576610	4011097781181	320
HG	92577450	4011097781105	320
HG	92577610	4011097781198	320
HG	92578450	4011097780962	320
HG	92578610	4011097781150	320
HG	92579450	4011097780924	319
HG	92579610	4011097781112	319
HG	92594000	4011097780344	765
HG	92601000	4011097133249	754
HG	92605000	4011097133287	765
HG	92631000	4011097133546	755
HG	92646000	4011097133720	758
HG	92730000	4011097222776	751
HG	92996000	4059625026632	753
93			
HG	93500000	4059625222478	346
HG	93571610	4059625142684	328
HG	93571670	4059625270134	328
HG	93571700	4059625270127	328
HG	93571880	4059625141892	328
HG	93573610	4059625142714	328
HG	93573670	4059625270097	328
HG	93573700	4059625270080	328
HG	93573880	4059625142615	328
HG	93574610	4059625142721	328
HG	93574670	4059625270073	328
HG	93574700	4059625270066	328

brand	Code no.	EAN	page
HG	93574880	4059625142622	328
HG	93575610	4059625142738	329
HG	93575670	4059625270059	329
HG	93575700	4059625270042	329
HG	93575880	4059625142639	329
HG	93576610	4059625142745	329
HG	93576670	4059625270035	329
HG	93576700	4059625270028	329
HG	93576880	4059625142646	329
HG	93577610	4059625142752	329
HG	93577670	4059625270011	329
HG	93577700	4059625270004	329
HG	93577880	4059625142653	329
HG	93578610	4059625142769	329
HG	93578670	4059625269992	329
HG	93578700	4059625269985	329
HG	93578880	4059625142660	329
HG	93579610	4059625142776	328
HG	93579670	4059625269978	328
HG	93579700	4059625269961	328
HG	93579880	4059625142677	328
94			
HG	94008000	4011097326849	756
HG	94009000	4011097326894	756
HG	94033000	4011097399256	754
HG	94074000	4011097242606	761
HG	94077000	4011097345024	758
HG	94108000	4011097177113	760
HG	94139000	4011097178752	269
HG	94139140	4011097949062	269
HG	94139340	4011097949048	269
HG	94139670	4059625308943	269
HG	94139700	4059625304327	269
HG	94139990	4011097949208	269
HG	94142000	4011097183800	756
HG	94148000	4011097177120	760
HG	94149000	4011097178745	756
HG	94246000	4011097134888	758
HG	94282000	4011097239040	754
95			
HG	95014000	4011097404332	757
HG	95093000	4011097262321	760
HG	95239000	4011097611686	759
HG	95282000	4011097633152	753
HG	95455000	4011097642864	753
HG	95506000	4011097646107	765
HG	95507000	4011097646114	765
HG	95758000	4011097730738	757
96			
HG	96026000	4011097136011	760
HG	96083000	4011097136264	759
HG	96094000	4011097183251	766
HG	96100000	4011097136547	763
HG	96146000	4011097270388	761
HG	96153000	4011097136745	759
HG	96153130	4011097971353	759
HG	96170000	4011097136844	749
HG	96189000	4011097176482	761
HG	96190000	4011097176499	750
HG	96190840	4011097178202	750
HG	96190880	4011097363707	750

brand	Code no.	EAN	page
HG	96326000	4011097380575	752
HG	96339000	4011097363295	752
HG	96370000	4011097345000	359
HG	96445000	4011097400228	758
HG	96454000	4011097395968	761
HG	96507000	4011097603285	763
HG	96509000	4011097439914	757
HG	96615000	4011097391502	347
HG	96618000	4011097441245	763
HG	96633000	4011097450681	755
HG	96645000	4011097445366	758
HG	96783000	4011097477077	751
HG	96922000	4011097491240	761
97			
HG	97204000	4011097579801	762
HG	97205000	4011097654805	760
HG	97206000	4011097529523	764
HG	97350000	4011097500041	765
HG	97651000	4011097504520	750
HG	97685000	4011097592824	751
HG	97999000	4011097541174	763
98			
HG	98058000	4011097137711	759
HG	98127000	4011097500157	762
HG	98133000	4011097500133	759
HG	98189000	4011097516714	762
HG	98282000	4011097606460	755
HG	98283000	4011097606453	757
HG	98371000	4011097716268	764
HG	98520000	4011097599489	750
HG	98702000	4011097605494	759
HG	98753000	4011097554235	750
HG	98804000	4011097568744	752
HG	98996000	4011097592817	764

Hand showers

	Rainfinity		Raindance Select S	Raindance Select E
				
Finish				
Shower head size	130	100	120/150	120/150
Flowrate	8.5/14	9/13.8	5.7 - 16.4	8.5 - 16.4
EcoSmart+	–	–	■	–
EcoSmart	■	■	■	■
Select	■	–	■	■
QuickClean	■	■	■	■
AirPower	–	–	■	■
Number of sprays	3	1	3	3
PowderRain	■	■	■	–
IntensePowderRain	■	–	–	–
Rain	–	–	■	■
IntenseRain	–	–	–	–
MonoRain	■	–	–	–
from page	70	70	71	72

	Croma Select E / Croma E	Croma 100	Crometta	Crometta 85	Vernis Blend
					
Finish					
Shower head size	110	100	100	85	100
Flowrate	7 - 16	9 - 19	5.7 - 14	16/17	5.2 - 15.2
EcoSmart+	■	–	■	–	■
EcoSmart	■	■	■	–	■
Select	■	–	–	–	–
QuickClean	■	■	■	■	■
AirPower	–	–	–	–	–
Number of sprays	1/3	1 - 4	1/2	1 - 3	2
PowderRain	–	–	–	–	–
IntensePowderRain	–	–	–	–	–
Rain	■	■	■	–	■
IntenseRain	■	–	■	–	■
MonoRain	–	■	–	■	–
from page	76	77	77	78	79

■ available depending on the model
– not available

	Pulsify Planet Edition	Pulsify Select S / Pulsify S	Pulsify S / Pulsify E	Croma Select S / Croma S
				
Finish				
Shower head size	105	105	100	110
Flowrate	5.7	5.7 - 13.5	5 - 8.5	7 - 16
EcoSmart+	■	■	■	■
EcoSmart	–	■	■	■
Select	■	■	–	■
QuickClean	■	■	■	■
AirPower	–	–	–	–
Number of sprays	2	1/3	1	1/3
PowderRain	■	■	■	–
IntensePowderRain	–	–	–	–
Rain	–	–	–	■
IntenseRain	■	■	–	■
MonoRain	–	■	–	–
from page	73	73	74	75

	Jocolino			DogShower
				
Finish				
Shower head size	27	27	27	150
Flowrate	11	11	11	7.6
EcoSmart+	–	–	–	–
EcoSmart	–	–	–	■
Select	–	–	–	■
QuickClean	–	–	–	–
AirPower	–	–	–	–
Number of sprays	2	2	2	3
PowderRain	–	–	–	–
IntensePowderRain	–	–	–	–
Rain	■	■	■	–
IntenseRain	–	–	–	–
MonoRain	■	■	■	–
from page	79	79	79	80

Overhead showers

	Rainfinity		Rainmaker Select		
					
Finish					
Shower head size	250/360	250/360	580	460/270/460/300	460/270/460/300
Flowrate	9 - 28.1	9 - 20.3	9.5/20	9 - 19	7 - 23
EcoSmart+	–	–	–	–	–
EcoSmart	■	■	■	■	■
Select	–	–	–	–	–
QuickClean	■	■	■	■	■
AirPower	–	–	–	–	–
Wall installation	■	■	■	■	–
Ceiling installation	–	■	–	–	■
Number of sprays	1/3	1	3	1 - 3	1 - 3
PowderRain	■	■	–	–	–
IntensePowderRain	–	–	–	–	–
Rain	–	–	■	■	■
RainAir	–	–	–	–	–
from page	152	153	155	156	157

	Raindance S			Raindance E	
					
Finish					
Shower head size	180 - 300	240	240	300	300
Flowrate	9 - 20	8 - 18.1	18.1	7.4/17	7.4/17
EcoSmart+	–	–	–	–	–
EcoSmart	■	■	–	■	■
Select	–	–	–	–	–
QuickClean	■	■	■	■	■
AirPower	■	■	–	■	■
Wall installation	–	■	■	■	–
Ceiling installation	■	–	■	–	■
Number of sprays	1	1	1	1	1
PowderRain	■	■	■	–	–
IntensePowderRain	–	–	–	–	–
Rain	–	–	–	–	–
RainAir	■	■	–	■	■
from page	161	161	162	164	165

■ available depending on the model
– not available

	Raindance Rainfall		Raindance Select S		Raindance S
					
Finish					
Shower head size	180	150	240/300	240/300	300
Flowrate	24	18	17	9/17	9/18
EcoSmart+	–	–	–	–	–
EcoSmart	–	–	–	■	■
Select	–	–	■	■	–
QuickClean	■	–	■	■	■
AirPower	■	–	■	■	■
Wall installation	■	■	■	–	■
Ceiling installation	–	–	–	■	–
Number of sprays	2	1	2	2	1
PowderRain	–	–	–	–	–
IntensePowderRain	–	–	–	–	–
Rain	–	–	■	■	–
RainAir	■	–	■	■	■
from page	158	159	159	160	160

	Raindance E		Raindance	Raindance Classic
				
Finish				
Shower head size	400/400	240/360	260/260	240
Flowrate	9/20	9 - 19.5	8/15	19
EcoSmart+	–	–	–	–
EcoSmart	■	■	■	–
Select	–	–	–	–
QuickClean	■	■	■	■
AirPower	■	■	■	■
Wall installation	–	–	–	–
Ceiling installation	■	■	■	■
Number of sprays	1	1	1	1
PowderRain	–	–	–	–
IntensePowderRain	–	–	–	–
Rain	–	–	–	–
RainAir	■	■	■	■
from page	166	166	168	168

Overhead showers

	Pulsify S			Pulsify E	
				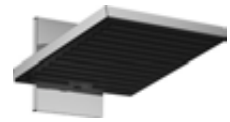	
Finish					
Shower head size	260	260	105	260	260
Flowrate	7.4/11.3	8.4/12.3	6/11.7	8/10.8	5.5 - 11.7
EcoSmart+	–	–	■	–	■
EcoSmart	■	■	–	■	■
Select	–	–	–	–	–
QuickClean	■	■	■	■	■
AirPower	–	–	–	–	–
Wall installation	■	■	■	■	■
Ceiling installation	–	■	–	–	■
Number of sprays	2	1	1	2	1
PowderRain	■	■	■	■	■
IntensePowderRain	■	–	–	■	–
Rain	–	–	–	–	–
RainAir	–	–	–	–	–
from page	169	169	170	171	172

	Crometta S	Crometta E	Crometta 85	Vernis Blend	Vernis Shape
					
Finish					
Shower head size	240	240	85	200	230
Flowrate	9 - 21	8.1 - 21	5.7	5.4 - 12.4	5.4 - 14.7
EcoSmart+	–	–	■	■	■
EcoSmart	■	■	–	■	■
Select	–	–	–	–	–
QuickClean	■	■	■	■	■
AirPower	–	–	–	–	–
Wall installation	■	■	■	■	■
Ceiling installation	■	■	■	■	■
Number of sprays	1	1	1	1	1
PowderRain	–	–	–	–	–
IntensePowderRain	–	–	–	–	–
Rain	■	■	–	■	■
RainAir	–	–	–	–	–
from page	178	180	182	182	183

■ available depending on the model
– not available

	Croma Select S	Croma Select E	Croma E	Croma	Croma 100
					
Finish	◐	◐◐	◐	◐●●●○●	◐
Shower head size	180	180	280	220/280	100
Flowrate	17	9/17	8/18.3	8.5 - 19	22
EcoSmart+	–	–	–	–	–
EcoSmart	–	■	■	■	–
Select	■	■	–	–	–
QuickClean	■	■	■	■	■
AirPower	–	–	■	■	–
Wall installation	■	■	■	■	■
Ceiling installation	■	■	■	■	■
Number of sprays	2	2	1	1	4
PowderRain	–	–	–	–	–
IntensePowderRain	–	–	–	–	–
Rain	■	■	–	–	■
RainAir	–	–	■	■	–
from page	173	173	174	175	178

	Clubmaster
	
Finish	◐
Shower head size	90
Flowrate	19
EcoSmart+	–
EcoSmart	–
Select	–
QuickClean	■
AirPower	–
Wall installation	■
Ceiling installation	–
Number of sprays	3
PowderRain	–
IntensePowderRain	–
Rain	–
RainAir	–
from page	185

Showerpipes and shower panels

	Rainfinity		Rainmaker Select	Raindance Select S	Raindance S
					
Finish					
Shower head size	250/360	360	460	240/300	240/300
Flowrate	8.2/15.9	19.6	9/27	15/16	9 - 20
EcoSmart+	–	–	–	–	–
EcoSmart	■	–	■	–	■
CoolContact	■	–	■	–	–
QuickClean	■	■	■	■	■
Bath spout	–	–	–	–	■
Single lever mixer	–	–	–	–	–
Reno	–	■	–	–	–
Pipe can be shortened in height	–	–	–	■	■
Number of sprays	1	1	2/3	1/2	1
PowderRain	■	■	–	■	–
Rain	–	–	■	■	–
RainAir	–	–	–	■	■
from page	196	197	198	199	201

	Croma Select S		Croma Select E	Croma E	Croma
					
Finish					
Shower head size	280	110	110	280	220
Flowrate	9 - 19	16	16	8.5 - 20.3	9 - 22
EcoSmart+	–	–	–	–	–
EcoSmart	■	–	–	■	■
CoolContact	–	–	–	■	–
QuickClean	■	■	■	■	■
Bath spout	■	–	–	■	■
Single lever mixer	■	–	–	–	■
Reno	■	–	–	–	■
Pipe can be shortened in height	■	–	–	■	■
Number of sprays	1	3	3	1	1
PowderRain	–	–	–	–	–
Rain	–	–	–	–	–
RainAir	■	–	–	■	■
from page	211	215	216	217	219

■ available depending on the model
– not available

	Raindance Select E	Raindance E		Pulsify S	
					
Finish					
Shower head size	300	360	300	260	260
Flowrate	8.5/19	9 - 20	9/16	7.5/12.9	7.5 - 21.8
EcoSmart+	–	–	–	–	–
EcoSmart	■	■	■	■	■
CoolContact	■	■	■	■	■
QuickClean	■	■	■	■	■
Bath spout	–	■	–	–	■
Single lever mixer	–	–	–	–	–
Reno	–	–	–	–	–
Pipe can be shortened in height	–	–	–	■	■
Number of sprays	2/3	1	1	2	1
PowderRain	–	–	–	■	■
Rain	■	–	–	–	–
RainAir	■	■	■	–	–
from page	203	204	207	208	210

	Crometta S	Crometta E	Vernis Blend	Vernis Shape	Raindance
					
Finish					
Shower head size	240	240	200/240	230, 230/170, 240, 240/240	180
Flowrate	7.6 - 20.5	7.6 - 19.5	5.7 - 20	5.7 - 20	22
EcoSmart+	–	–	■	■	–
EcoSmart	■	■	■	■	–
CoolContact	–	–	–	–	–
QuickClean	■	■	■	■	■
Bath spout	■	■	■	■	–
Single lever mixer	■	■	–	–	–
Reno	■	■	■	■	–
Pipe can be shortened in height	■	■	–	–	–
Number of sprays	1	1	1	1	2
PowderRain	–	–	–	–	–
Rain	■	■	■	■	–
RainAir	–	–	–	–	■
from page	223	227	231	234	237

Drains

	RainDrain Flex		RainDrain Match	RainDrain Rock	RainDrain Original
					
Finish					
Length (mm)	700 - 1200	700 - 1200	600 - 1200	600 - 1200	600 - 1200
Wall installation	–	–	■	–	–
Dryphon	■	■	■	■	■
Easy to clean siphon	–	–	–	–	–
Adjustable frame height	–	–	■	–	–
Resizeable cover length	■	■	–	■	–
from page	240	241	243	245	247

■ available depending on the model
– not available

RainDrain Compact





Finish	●	
Length (mm)	600 - 1200	600 - 1200
For standard installation	–	–
For flat installation	■	■
Dryphon	–	–
Easy to clean siphon	■	■
Adjustable frame height	–	–
Resizeable cover length	–	–
from page	248	249

Drains

	RainDrain Spot		RainDrain Point	
				
Finish	●	●	●	● ●
Length (mm)	150	150	100/150	100/150
Wall installation	–	–	–	–
Dryphon	–	–	–	–
Easy to clean siphon	■	■	■	■
Adjustable frame height	–	–	–	–
Resizeable cover length	–	–	–	–
from page	249	250	251	251

■ available depending on the model
– not available

Installation



The frame is used to easily bring the shower drain to tile level, creating a perfect finish.



Shower drain that is suitable for free in the floor installation in any type of shower area.



Shower drain that is suitable for wall installation in any type of shower area - chic and reliable.



This shower drain can be easily shortened on site so that it fits in any type of shower area.



Shower drain that is suitable for wall installation between two side walls in any type of shower area.



An appealing and reliable drainage solution. This shower drain is installed between two walls.



The high-quality installation set features a pre-assembled seal and is 100% waterproof.

Sustainability



This economical shower consumes up to 60% less water than our conventional ones. This reduces energy costs.



Shower that uses up to 40% less water than our conventional models and this also reduces energy costs.



Actively regulates water consumption – the amount of water can be adjusted via the control dial.

Technologies



The angle of the overhead shower can be adjusted and the water spray can be individually adapted.



Mixes water with air. For a smooth, lower-splash water spray and light yet full shower droplets.



Thermostatic mixer with innovative cooling technology to prevent scalding and unpleasant touching.



An improved waterless siphon with a high drainage capacity of 60 l/min and minimal cleaning effort.



The odour trap itself can be removed for cleaning, even once the drain has been installed.



The shower's quick and efficient emptying function reduces the dripping time after showering.



Large overhead showers require a high drainage capacity. This siphon manages up to 60 l/min.



Low-pressure technology enables use at pressures as low as 0.2 bar. Suitable for boilers/heat exchangers.

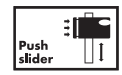

The height of the hand shower can be single-handedly and smoothly shifted at the touch of a button.



Limescale disappears here as if by magic - by turning the shower head when changing the spray type.



Easy cleaning of the shower drain: remove the cover with grate removal tool and remove all dirt and residue.



Limescale deposits and dirt can be simply rubbed off using a finger, creating less of a need to clean.



The bath filler can be swivelled under the thermostatic mixer when not in use. Nice and tidy.



A playful way to control the water flow, shower or spray type at the simple touch of a button.



Very dirty dog fur? The amount of water from the DogShower can be increased when required.

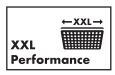

Large-scale distribution of the water in the shower so that the whole body is cocooned in feel-good droplets.

Highlights

Spray types



Soothing spray type for your dog. Gently cleans their legs and other sensitive body parts.



Rotating individual sprays that flow into one another for an invigorating and refreshing feel-good massage.



Specialist dog spray type for thoroughly rinsing fur, right down to their undercoat.



Intense spray consisting of thousands of micro-fine droplets. Thorough, soothing and low-splash.



Powerful, stimulating water spray that washes away tiredness and leaves people feeling fit.



Invigorating, focused and powerful spray for the home spa that allows the day's stresses to simply drain off.



Harmonious combination of soft shower rain and a dynamic spray for an indulgent shower every day.



Focused and extremly gentle spray soothing wellness moments and hydrotherapeutic showering.



Full shower rain that pampers your daily showering experience. Perfect for rinsing shampoo.



Extremly soft spray for dogs that gently and quickly cleans dirty paws. A stress-free routine for you and your dog.



Relaxing, micro-fine droplets that softly and silently cocoon the body. For sensual showering.



Invigorating and energizing showering indulgence with full shower rain designed for everyday shower pleasure.



Full shower rain with droplets enriched with air for soft yet efficient and indulgent showering.



Powerful stream that bathes the entire body and feels like a waterfall for wonderful relaxation.



Lavish downpour consisting of individual pearl-like droplets that invigorate mind, body and soul.



Intense water spray that rinses out shampoo in no time at all and is also energising and stimulating.



Caressing water sprays that gently swirl around the body. An act of kindness for the skin, mind and soul.



Invigorating shower rain offering powerful refreshment. Just what is needed in the mornings or after exercise.



Concentrated massage spray that helps to nicely and gently wash away everyday tensions and stress.

Finishes



Black/Chrome



Brushed Black Chrome

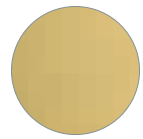

Brushed Brass



Brushed Bronze



Brushed Gold Optic



Brushed Nickel



Brushed Red Gold

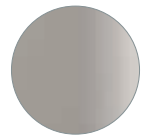

Brushed Stainless Steel

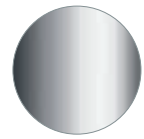

Chrome

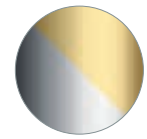

Chrome/Gold Optic



Fine Brass



Matt Black

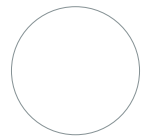

Matt White

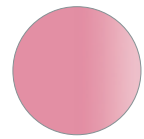

Pink



Polished Black Chrome

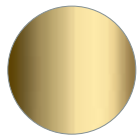
Polished Gold Optic

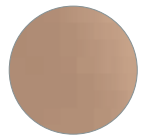
Polished Red Gold

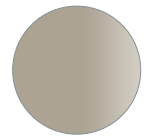
Sand (recycled)


Sky Blue

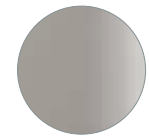
Stainless Steel Optic


Transparent

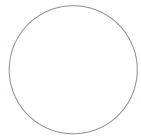
White


White/Chrome



Hand showers

Hand showers

Rainfinity Hand showers 3jet

Features of all variants

- spray type: PowderRain, Intense PowderRain, MonoRain
- convenient spray selection via Select button
- spray disc surface: easy cleanable aluminium spray disc, graphite
- with internal water conduction
- rinseable screen seal
- connection thread G ½
- suitable for continous flow water heaters

130



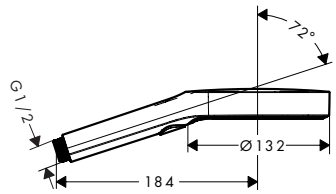

Sustainability

EcoSmart

Technologies

Select · Quick Clean · XXL Performance

Spray types

Powder Rain · Intense Powder Rain · Mono Rain

Certificates/declarations

EPD

Overview variants

Shower head size	Number of sprays	Spray types	Max. flow rate at 3 bar (l/min)	Min. flow pressure (bar)	Finish	Code no.
130	3	PowderRain, Intense PowderRain, MonoRain	8.5	1.5	Chrome	26865000
					Brushed Bronze	26865140
					Brushed Black Chrome	26865340
					Matt Black	26865670
					Matt White	26865700
					Polished Gold Optic	26865990
130	3	PowderRain, Intense PowderRain, MonoRain	14	1.1	Chrome	26864000
					Brushed Bronze	26864140
					Brushed Black Chrome	26864340
					Matt Black	26864670
					Matt White	26864700
					Polished Gold Optic	26864990

Rainfinity Baton hand showers 1jet

Features of all variants

- spray type: PowderRain
- spray disc surface: easy cleanable aluminium spray disc, graphite
- minimum flow pressure: 1 bar
- with internal water conduction
- rinseable screen seal
- connection thread G ½
- suitable for continous flow water heaters



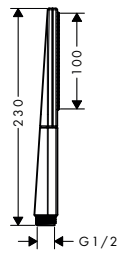

Sustainability

EcoSmart

Technologies

Quick Clean

Spray types

Powder Rain

Measurements within scale drawings are in mm.
Technical specifications and units of measure are subject to change.

Rainfinity Baton hand showers 1jet

Overview variants

Shower head size	Number of sprays	Spray types	Max. flow rate at 3 bar (l/min)	Min. flow pressure (bar)	Finish	Code no.
100	1	PowderRain	9	1	Brushed Bronze	26867140
					Brushed Black Chrome	26867340
					Matt Black	26867670
					Polished Gold Optic	26867990
100	1	PowderRain	13.8	1	Chrome	26866000
					Brushed Bronze	26866140
					Brushed Black Chrome	26866340
					Matt Black	26866670
					Matt White	26866700
					Polished Gold Optic	26866990

Raindance Select S Hand showers 3jet

Features of all variants

- convenient spray selection via Select button
- spray disc surface: easy cleanable plastic spray disc
- with internal water conduction
- rinseable screen seal
- connection thread G ½
- suitable for continous flow water heaters

150



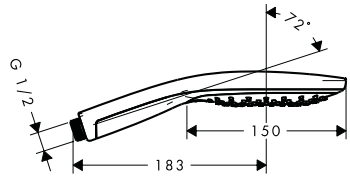

120



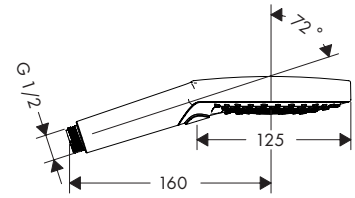

Sustainability

Eco Smart+ · EcoSmart

Technologies

Select · Quick Clean · AirPower · XXL Performance

Spray types

Powder Rain · Rain Air · Rain · Whirl · Mix · Caresse Air

Certificates/ declarations

EPD

Overview variants

Shower head size	Number of sprays	Spray types	Max. flow rate at 3 bar (l/min)	Min. flow pressure (bar)	Finish	Code no.
150	3	RainAir, CaresseAir, Mix	8.8	2.2	Chrome	28588000
					White/Chrome	28588400
150	3	RainAir, CaresseAir, Mix	16.4	1.5	Chrome	28587000
					White/Chrome	28587400
120	3	PowderRain, Rain, Whirl	5.7	1.5	Chrome	26516000
120	3	PowderRain, Rain, Whirl	8.3	1.4	Chrome	26515000
120	3	PowderRain, Rain, Whirl	11	1.2	Chrome	26014000
					Brushed Bronze	26014140
					Brushed Black Chrome	26014340
					Matt Black	26014670
					Matt White	26014700
					Polished Gold Optic	26014990

For more information about this product, please see the next page.

Measurements within scale drawings are in mm.
Technical specifications and units of measure are subject to change.

Hand showers

Raindance Select S Hand showers 3jet

Overview variants

Shower head size	Number of sprays	Spray types	Max. flow rate at 3 bar (l/min)	Min. flow pressure (bar)	Finish	Code no.
120	3	Rain, RainAir, Whirl	8.5	1.5	Chrome	26531000
					Brushed Bronze	26531140
					Brushed Black Chrome	26531340
					Matt Black	26531670
					Matt White	26531700
					Polished Gold Optic	26531990
120	3	Rain, RainAir, Whirl	15	1.4	Chrome	26530000
					Brushed Bronze	26530140
					Brushed Black Chrome	26530340
					White/Chrome	26530400
					Matt Black	26530670
					Matt White	26530700
					Polished Gold Optic	26530990

Raindance Select E Hand showers 3jet

Features of all variants

- convenient spray selection via Select button
- spray disc surface: easy cleanable plastic spray disc
- with internal water conduction
- rinseable screen seal
- connection thread G ½
- suitable for continous flow water heaters

150



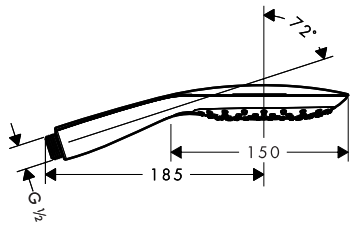

120



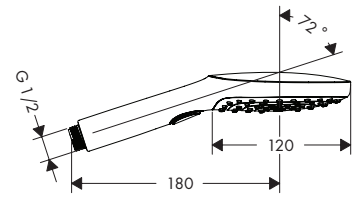

Sustainability

EcoSmart

Technologies

Select · Quick Clean · AirPower · XXL Performance

Spray types

Rain Air · Rain · Whirl · Mix · Caresse Air

Certificates/declarations

EPD

Overview variants

Shower head size	Number of sprays	Spray types	Max. flow rate at 3 bar (l/min)	Min. flow pressure (bar)	Finish	Code no.
150	3	RainAir, CaresseAir, Mix	8.5	1.6	Chrome	26551000
					White/Chrome	26551400
150	3	RainAir, CaresseAir, Mix	16.4	1.5	Chrome	26550000
					White/Chrome	26550400
120	3	Rain, RainAir, Whirl	8.5	1.5	Chrome	26521000
					White/Chrome	26521400

Measurements within scale drawings are in mm.
Technical specifications and units of measure are subject to change.

Raindance Select E Hand showers 3jet

Overview variants

Shower head size	Number of sprays	Spray types	Max. flow rate at 3 bar (l/min)	Min. flow pressure (bar)	Finish	Code no.
120	3	RainAir, Rain, Whirl	14.4	1	Chrome	26520000
					Brushed Bronze	26520140
					Brushed Black Chrome	26520340
					White/Chrome	26520400
					Matt Black	26520670
					Matt White	26520700
					Polished Gold Optic	26520990

Pulsify Planet Edition Hand shower 105 3jet Relaxation EcoSmart+ Select

Features

- shower head size: 105 mm
- spray type: PowderRain, IntenseRain, Massage spray
- convenient spray selection via Select button
- spray disc surface: graphite
- maximum flow rate at 3 bar: 5,7 l/min
- minimum flow pressure: 1 bar
- with internal water conduction
- rinseable sieve insert
- connection thread G ½
- suitable for continous flow water heaters
- EU taxonomy: max. 6 l/min - Substantial Contribution (SC) possible



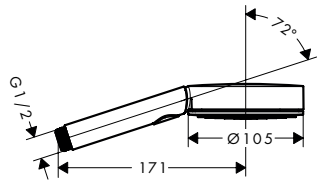

Sustainability

Eco Smart+

Technologies

Select · Quick Clean · XXL Performance

Spray types

Powder Rain · Intense Rain · Massage

Finish	Code no.
Sand (recycled)	26077210

Pulsify Select S / Pulsify S Hand showers 3jet, 1jet

Features of all variants

- shower head size: 105 mm
- spray disc surface: graphite
- with internal water conduction
- rinseable sieve insert
- connection thread G ½
- suitable for continous flow water heaters

Relaxation



Activation



1jet



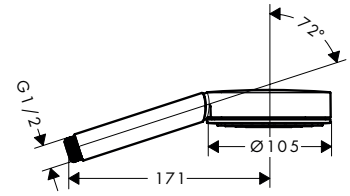

Sustainability

Eco Smart+ · EcoSmart

Technologies

Select · Quick Clean · XXL Performance

Spray types

Powder Rain · Intense Rain · Massage · Mono Rain

For more information about this product, please see the next page.

Measurements within scale drawings are in mm.
Technical specifications and units of measure are subject to change.

Pulsify Select S / Pulsify S Hand showers 3jet, 1jet

Overview variants

Shower head size	Shower effect	Number of sprays	Spray types	Max. flow rate at 3 bar (l/min)	Min. flow pressure (bar)	Select	Finish	Code no.
105	Relaxation	3	PowderRain, IntenseRain, Massage spray	8.2	1.2	■	Chrome	24111000
							Brushed Bronze	24111140
							Matt Black	24111670
							Matt White	24111700
105	Relaxation	3	PowderRain, IntenseRain, Massage spray	11.4	0.9	■	Chrome	24110000
							Brushed Bronze	24110140
							Matt Black	24110670
							Matt White	24110700
105	Activation	3	PowderRain, IntenseRain, MonoRain	8.5	1.5	■	Chrome	24101000
							Matt Black	24101670
							Matt White	24101700
105	Activation	3	PowderRain, IntenseRain, MonoRain	11.5	0.8	■	Chrome	24100000
							Matt Black	24100670
							Matt White	24100700
105	1jet	1	PowderRain	5.7	1	–	Chrome	24121000
							Matt Black	24121670
							Matt White	24121700
105	1jet	1	PowderRain	13.5	0.6	–	Chrome	24120000
							Matt Black	24120670
							Matt White	24120700

Pulsify S / Pulsify E Baton hand showers 1jet

Features of all variants

- spray type: PowderRain
- with internal water conduction
- rinseable sieve insert
- connection thread G ½
- suitable for continous flow water heaters

round



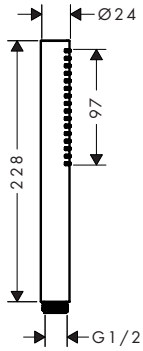

square



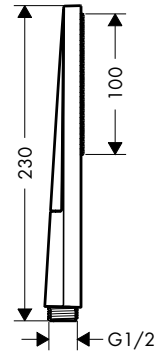

Sustainability

Eco Smart+ | EcoSmart

Technologies

Quick Clean

Spray types

Powder Rain

Overview variants

Shower head size	Number of sprays	Spray types	Max. flow rate at 3 bar (l/min)	Min. flow pressure (bar)	Shape	Finish	Available from	Code no.
100	1	PowderRain	5.4	0.5	round	Chrome	Q1/2024	24126000
						Brushed Bronze	Q1/2024	24126140
						Matt Black	Q1/2024	24126670
						Matt White	Q1/2024	24126700

Measurements within scale drawings are in mm.
Technical specifications and units of measure are subject to change.

Pulsify S / Pulsify E Baton hand showers 1jet

Overview variants

Shower head size	Number of sprays	Spray types	Max. flow rate at 3 bar (l/min)	Min. flow pressure (bar)	Shape	Finish	Available from	Code no.
100	1	PowderRain	8.5	0.5	round	Chrome	Q1/2024	24125000
						Brushed Bronze	Q1/2024	24125140
						Matt Black	Q1/2024	24125670
						Matt White	Q1/2024	24125700
100	1	PowderRain	5	0.9	square	Chrome		24321000
						Brushed Bronze		24321140
						Matt Black		24321670
						Matt White		24321700
100	1	PowderRain	8	0.8	square	Chrome		24320000
						Brushed Bronze		24320140
						Matt Black		24320670
						Matt White		24320700

Croma Select S / Croma S Hand showers Multi, Vario, 1jet

Features of all variants

- shower head size: 110 mm
- spray disc surface: easy cleanable plastic spray disc, white
- with internal water conduction
- rinseable screen seal
- connection thread G ½
- suitable for continous flow water heaters

Multi



Vario



1jet



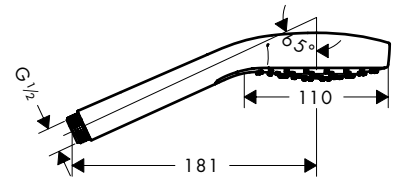

Sustainability

Eco Smart+ · EcoSmart

Technologies

Select · Quick Clean · XXL Performance

Spray types

SoftRain · Rain · Intense Rain · Massage · Turbo Rain

Certificates/declarations

EPD

Overview variants

Version	Shower head size	Spray types	Max. flow rate at 3 bar (l/min)	Min. flow pressure (bar)	Select	Finish	Code no.
Multi	110	SoftRain, IntenseRain, Massage spray	9	1.4	■	White/Chrome	26801400
Multi	110	SoftRain, IntenseRain, Massage spray	16	1	■	White/Chrome	26800400
Vario	110	Rain, TurboRain, IntenseRain	9	1.4	■	White/Chrome	26803400
Vario	110	Rain, IntenseRain, TurboRain	14.7	1	■	White/Chrome	26802400
1jet	110	Rain	7	1.2	–	White/Chrome	26806400
1jet	110	Rain	9	1	–	White/Chrome	26805400
1jet	110	Rain	16	0.8	–	White/Chrome	26804400

Measurements within scale drawings are in mm.
Technical specifications and units of measure are subject to change.

Croma Select E / Croma E Hand showers Multi, Vario, 1jet

Features of all variants

- shower head size: 110 mm
- spray disc surface: easy cleanable plastic spray disc, white
- with internal water conduction
- rinseable screen seal
- connection thread G ½
- suitable for continous flow water heaters

Multi



Vario



1jet



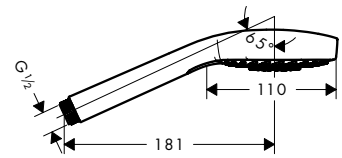

Sustainability

Eco Smart+ · EcoSmart

Technologies

Select · Quick Clean · XXL Performance

Spray types

SoftRain · Rain · Intense Rain · Massage · Turbo Rain

Certificates/declarations

EPD

Overview variants

Version	Shower head size	Spray types	Max. flow rate at 3 bar (l/min)	Min. flow pressure (bar)	Select	Finish	Code no.
Multi	110	SoftRain, IntenseRain, Massage spray	9	1.4	■	White/Chrome	26811400
Multi	110	SoftRain, IntenseRain, Massage spray	16	1	■	White/Chrome	26810400
Vario	110	Rain, TurboRain, IntenseRain	9	1.4	■	White/Chrome	26813400
Vario	110	Rain, IntenseRain, TurboRain	14.7	1	■	White/Chrome	26812400
1jet	110	Rain	7	1.2	–	White/Chrome	26816400
1jet	110	Rain	9	1	–	White/Chrome	26815400
						Matt Black	26815670
						Matt White	26815700
						Brushed Black Chrome	26815340
						Polished Gold Optic	26815990
1jet	110	Rain	16	1	–	White/Chrome	26814400
						Brushed Bronze	26814140
						Brushed Black Chrome	26814340
						Matt Black	26814670
						Matt White	26814700
						Polished Gold Optic	26814990

Measurements within scale drawings are in mm.
Technical specifications and units of measure are subject to change.

Croma 100 Hand showers Multi, Vario, 1jet

Features of all variants

- shower head size: 100 mm
- spray disc surface: grey
- with internal water conduction
- rinseable screen seal
- connection thread G ½
- suitable for continous flow water heaters

Multi



Vario



1jet



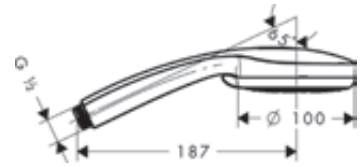

Sustainability

EcoSmart

Technologies

Quick Clean

XXL Performance

Spray types

Normal | Rain | Shampoo | Massage | Mono Rain

Certificates/declarations

EPD

Overview variants

Version	Shower head size	Number of sprays	Spray types	Max. flow rate at 3 bar (l/min)	Min. flow pressure (bar)	Finish	Code no.
Multi	100	3	Rain, Massage spray, MonoRain	9	1.1	Chrome	28538000
Multi	100	3	Rain, MonoRain, Massage spray	19	1.2	Chrome	28536000
Vario	100	4	Rain, Shampoo spray, normal spray, Massage spray	9	1	Chrome	28537000
Vario	100	4	Rain, normal spray, Shampoo spray, Massage spray	18	1	Chrome	28535000
1jet	100	1	Rain	9	1	Chrome	28583000
1jet	100	1	Rain	16	1	Chrome	28580000

Crometta Hand showers Vario, 1jet

Features of all variants

- shower head size: 100 mm
- spray disc surface: easy cleanable plastic spray disc
- minimum flow pressure: 1 bar
- with internal water conduction
- rinseable screen seal
- connection thread G ½
- suitable for continous flow water heaters

Vario



1jet



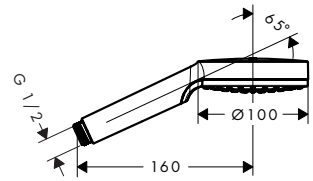

Sustainability

Eco Smart+ | EcoSmart

Technologies

Quick Clean | XXL Performance

Spray types

Rain | Intense Rain

Certificates/declarations

EPD

For more information about this product, please see the next page.

Measurements within scale drawings are in mm.
Technical specifications and units of measure are subject to change.

Hand showers

Crometta Hand showers Vario, 1jet

Overview variants

Version	Shower head size	Number of sprays	Spray types	Max. flow rate at 3 bar (l/min)	Min. flow pressure (bar)	Finish	Code no.
Vario	100	2	Rain, IntenseRain	5.7	1	White/Chrome	26336400
Vario	100	2	Rain, IntenseRain	9	1	White/Chrome	26332400
Vario	100	2	Rain, IntenseRain	13.8	1	White/Chrome	26330400
1jet	100	1	Rain	5.7	1	White/Chrome	26334400
1jet	100	1	Rain	9	1	White/Chrome	26333400
1jet	100	1	Rain	14	1	White/Chrome	26331400

Crometta 85 Hand showers Multi, Vario, 1jet

Features of all variants

- shower head size: 85 mm
- spray disc surface: grey
- minimum flow pressure: 1 bar
- with internal water conduction
- rinseable screen seal
- connection thread G ½
- suitable for continous flow water heaters

Multi



Vario



1jet



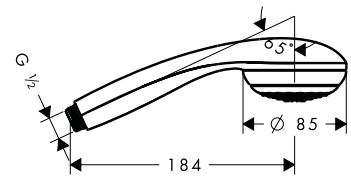

Technologies



Spray types



Certificates/declarations



Overview variants

Version	Shower head size	Number of sprays	Spray types	Max. flow rate at 3 bar (l/min)	Min. flow pressure (bar)	Finish	Code no.
Multi	85	3	normal spray, Massage spray, MonoRain	16	1	Chrome	28563000
Vario	85	2	normal spray, Vario spray	17	1	Chrome	28562000
1jet	85	1	normal spray	16	1	Chrome	28585000

Measurements within scale drawings are in mm.
Technical specifications and units of measure are subject to change.

Vernis Blend Hand showers Vario

Features of all variants

- shower head size: 100 mm
- spray type: Rain, IntenseRain
- spray type adjustment by turning spray disc
- spray disc surface: easy cleanable plastic spray disc
- minimum flow pressure: 1 bar
- with internal water conduction
- rinseable screen seal
- connection thread G ½
- suitable for continous flow water heaters



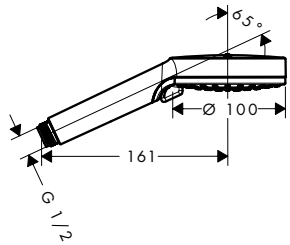

Sustainability

Technologies

Spray types

Certificates/declarations

Overview variants

Shower head size	Number of sprays	Spray types	Max. flow rate at 3 bar (l/min)	Min. flow pressure (bar)	Finish	Code no.
100	2	Rain, IntenseRain	5.2	1	Chrome	26090000
100	2	Rain, IntenseRain	9.7	1	Chrome	26340000
					Matt Black	26340670
100	2	Rain, IntenseRain	15.2	1	Chrome	26270000
					Matt Black	26270670
100	2	Rain, IntenseRain	10.5	1	Chrome	26270007
					Matt Black	26270677

Jocolino Children hand showers 2jet

Features of all variants

- shower head size: 27 mm
- spray type: Rain, MonoRain
- switch spray type by turning the shower head
- maximum flow rate at 3 bar: 11 l/min
- minimum flow pressure: 0,8 bar
- ergonomic handle perfect for smaller hands
- googly eyes that interact with the kid
- limescale residues on the jets are removed by the rotation when changing spray modes
- with internal water conduction
- rinseable screen seal
- connection thread G ½
- suitable for continous flow water heaters

Lion



Zebra



Crocodile



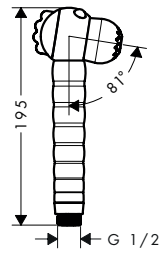

Technologies

Spray types

Overview variants

Version	Shower head size	Number of sprays	Spray types	Max. flow rate at 3 bar (l/min)	Min. flow pressure (bar)	Code no.
Lion	27	2	Rain, MonoRain	11	0.8	28760210
Zebra	27	2	Rain, MonoRain	11	0.8	28787640

For more information about this product, please see the next page.

Measurements within scale drawings are in mm.
Technical specifications and units of measure are subject to change.

Hand showers

Jocolino Children hand showers 2jet

Overview variants

Version	Shower head size	Number of sprays	Spray types	Max. flow rate at 3 bar (l/min)	Min. flow pressure (bar)	Code no.
Crocodile	27	2	Rain, MonoRain	11	0.8	28788570

Optional parts:		Finish	Code no.
	Quick-coupling set	Black	28346000

DogShower Dogs hand shower 150 3jet Select

Features

- shower head size: 150 x 63 mm
- spray type: fur spray, leg spray, paw spray
- convenient spray selection via Select button
- maximum flow rate at 3 bar: 7,6 l/min
- function from: 5,7 l/min
- operating pressure: min. 1 bar/max. 6 bar
- minimum flow pressure: 1 bar
- elongated, brush-like nozzles (1,5 cm) for thorough cleaning with massage effect
- ergonomic design
- Water Boost: boost function to increase waterflow when needed
- suitable for continous flow water heaters
- connection dimension: DN15
- rinseable screen seal
- non-return valve
- EU taxonomy: max. 8 l/min - Do No Significant Harm (DNSH)



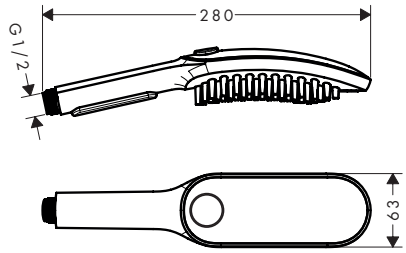

Sustainability

EcoSmart

Technologies

Select (SELECT) · Water Boost

Spray types

Leg Spray · Paw Spray · Fur Spray

Finish	Code no.
Matt White	26640700
Matt Black	26640670
Sky Blue	26640540
Pink	26640560

Optional parts:		Finish	Code no.
	Quick-coupling set	Black	28346000

Measurements within scale drawings are in mm.
Technical specifications and units of measure are subject to change.

Quick-coupling set

Features

- enables quick and easy changing of hand showers
- material: plastic
- connection dimension DN15



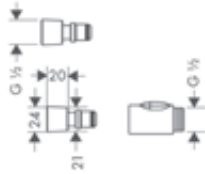

Finish	Code no.
Black	28346000

Bidette hand showers 1jet for cold water with shower holder

Features of all variants

- consists of: bidette hand shower, shut-off valve with integrated shower holder, shower hose
- shower head size: 28 mm
- integrated support function
- maximum flow rate at 3 bar: 5 l/min
- minimum flow pressure: 1 bar
- operating pressure: min. 1 bar/max. 10 bar
- pivot connector prevents hose from tangling
- shower hose with conical nut on both ends
- with non-return valve
- wall supports of metal
- wall mounting: screw fastening
- rinseable screen seal
- not intrinsically safe against backflow
- not suitable for operation in countries with valid EN 1717
- EU taxonomy: max. 6 l/min - Substantial Contribution (SC) possible

round



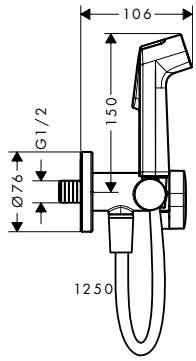

square



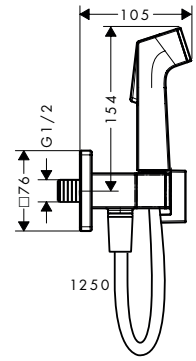

Sustainability

Eco Smart+

Technologies

Quick Clean

Overview variants

Shape	Number of sprays	Max. flow rate at 3 bar (l/min)	Min. flow pressure (bar)	Finish	Code no.
round	1	5	1	Chrome	29230000
				Matt Black	29230670
				Matt White	29230700
softsquare	1	5	1	Chrome	29231000
				Matt Black	29231670
				Matt White	29231700

Consisting of:	Included in	Code no.
Isiflex Shower hose 125 cm	29230XXX 29231XXX	28272XXX

Measurements within scale drawings are in mm.
Technical specifications and units of measure are subject to change.

Hand showers

Bidette hand showers 1jet for mixed water with shower holder

Features of all variants

- consists of: bidette hand shower, shut-off valve with integrated shower holder, shower hose
- shower head size: 28 mm
- integrated support function
- maximum flow rate at 3 bar: 5 l/min
- minimum flow pressure: 1 bar
- operating pressure: min. 1 bar/max. 10 bar
- pivot connector prevents hose from tangling
- with non-return valve
- wall supports of metal
- wall mounting: screw fastening
- rinseable screen seal
- not intrinsically safe against backflow
- not suitable for operation in countries with valid EN 1717
- EU taxonomy: max. 6 l/min - Substantial Contribution (SC) possible

round



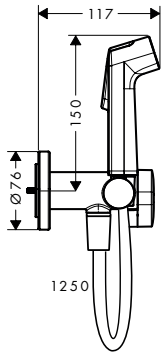

square



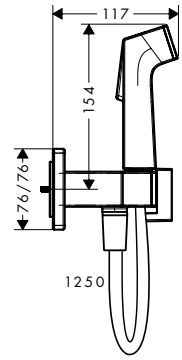

Sustainability

Eco Smart+

Technologies

Quick Clean

Overview variants

	Shape	Number of sprays	Max. flow rate at 3 bar (l/min)	Min. flow pressure (bar)	Finish	Code no.
	round	1	5	1	Chrome	29232000
					Brushed Bronze	29232140
					Brushed Black Chrome	29232340
					Matt Black	29232670
					Matt White	29232700
	softsquare	1	5	1	Chrome	29233000
					Brushed Bronze	29233140
					Brushed Black Chrome	29233340
					Matt Black	29233670
					Matt White	29233700

Consisting of:	Included in	Code no.
Isiflex Shower hose 125 cm	29232XXX 29233XXX	28272XXX

Required parts:	Code no.
Basic set for mixed water bidette	29235180

Measurements within scale drawings are in mm.
Technical specifications and units of measure are subject to change.

Basic set for mixed water bidette

Features

- suitable for: all bidette hand showers for mixed water
- wall-mounted
- minimum mounting depth: 45 mm
- maximum mounting depth: 60 mm
- connection dimension: Rp ½
- hot and cold water connection necessary



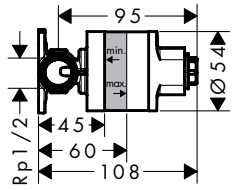

Code no.
29235180

Bidette hand shower 1jet S EcoSmart+ with shower holder and pressure resistant shower hose 125 cm

Features

- consists of: bidette hand shower, shower holder, shower hose
- shower head size: 28 mm
- integrated support function
- maximum flow rate at 3 bar: 5 l/min
- with non-return valve
- shower holder made of plastic
- wall mounting: screw fastening
- rinseable screen seal
- not intrinsically safe against backflow
- we recommend using this product with an upstream shut-off valve in the line
- not suitable for operation in countries with valid EN 1717
- EU taxonomy: max. 6 l/min - Substantial Contribution (SC) possible



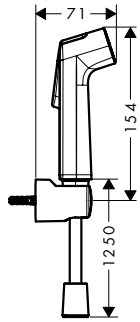

Sustainability

Technologies

Finish	Code no.
Chrome	29234000



Shower sets

Shower sets

Rainfinity Shower sets 3jet with shower bar S Puro

Features of all variants

- consists of: hand shower, slider, shower hose, shower bar
- shower head size: 130 mm
- spray type: PowderRain, Intense PowderRain, MonoRain
- spray disc surface: graphite
- convenient spray selection via Select button
- operating pressure: min. 1 bar/max. 6 bar
- height-adjustable slider with locking push-button slider
- wall mounting: screw fastening
- profile pipe: round
- shower bar diameter: 22 mm
- pivot connector prevents hose from tangling

90



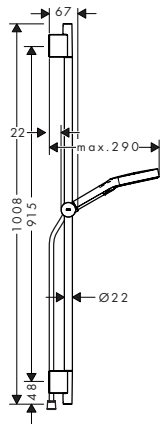

65



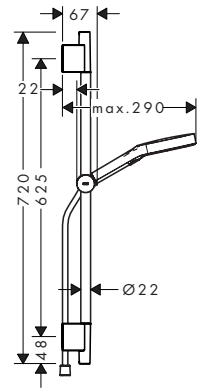

Sustainability

EcoSmart

Technologies

Push slider · Select · Quick Clean · XXL Performance

Spray types

Powder Rain · Intense Powder Rain · Mono Rain

Overview variants

Version	Length shower bar (mm)	Shower head size	Number of sprays	Spray types	Max. flow rate at 3 bar (l/min)	Min. flow pressure (bar)	Finish	Code no.
90	1008	130	3	PowderRain, Intense PowderRain, MonoRain	8.5	1	Chrome	28744000
							Brushed Bronze	28744140
							Brushed Black Chrome	28744340
							Matt Black	28744670
							Matt White	28744700
							Polished Gold Optic	28744990
90	1008	130	3	PowderRain, Intense PowderRain, MonoRain	14	1.1	Chrome	28743000
							Brushed Bronze	28743140
							Brushed Black Chrome	28743340
							Matt Black	28743670
							Matt White	28743700
							Polished Gold Optic	28743990
65	720	130	3	PowderRain, Intense PowderRain, MonoRain	8.5	1	Chrome	28746000
							Brushed Bronze	28746140
							Brushed Black Chrome	28746340
							Matt Black	28746670
							Matt White	28746700
							Polished Gold Optic	28746990
65	720	130	3	PowderRain, Intense PowderRain, MonoRain	14	1.1	Chrome	28745000
							Brushed Bronze	28745140
							Brushed Black Chrome	28745340
							Matt Black	28745670
							Matt White	28745700
							Polished Gold Optic	28745990

Measurements within scale drawings are in mm.
Technical specifications and units of measure are subject to change.

Rainfinity Shower sets 3jet with shower bar S Puro

Consisting of:		Included in	Code no.
	Rainfinity Hand shower 130 3jet EcoSmart	28744XXX 28746XXX	26865XXX
	Rainfinity Hand shower 130 3jet	28743XXX 28745XXX	26864XXX
	Designflex Textile shower hose 160 cm	28744XXX 28743XXX 28746XXX 28745XXX	28260XXX

Rainfinity Shower sets 3jet

Features of all variants

- shower head size: 130 mm
- spray type: PowderRain, Intense PowderRain, MonoRain
- spray disc surface: graphite
- convenient spray selection via Select button
- shelf made of safety glass
- surface shelf: chrome
- 90° position adjustable hand shower holder, pivots left and right, up and down
- wall mounting: screw fastening
- wall supports of plastic
- wall bar type: flat aluminium profile with safety glass finish
- surface shower bar: chrome
- profile pipe: square
- bar width: 41 mm
- pivot connector prevents hose from tangling

150



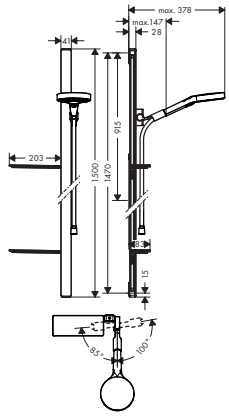

90



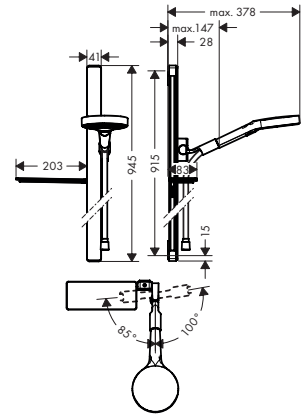

Sustainability

EcoSmart

Technologies

Select · Quick Clean · XXL Performance

Spray types

Powder Rain · Intense Powder Rain · Mono Rain

Overview variants

Version	Length shower bar (mm)	Shower head size	Spray types	Max. flow rate at 3 bar (l/min)	Min. flow pressure (bar)	Shelf	Finish	Code no.
150	1500	130	PowderRain, Intense PowderRain, MonoRain	8.5	1.5	2	Chrome	27674000
150	1500	130	PowderRain, Intense PowderRain, MonoRain	14	1	2	Chrome	27673000
90	945	130	PowderRain, Intense PowderRain, MonoRain	8.5	1.5	1	Chrome	27672000
90	945	130	PowderRain, Intense PowderRain, MonoRain	14	1	1	Chrome	27671000

Consisting of:		Included in	Code no.
	Rainfinity Hand shower 130 3jet EcoSmart	27674000 27672000	26865000
	Rainfinity Hand shower 130 3jet	27673000 27671000	26864000

For more information about this product, please see the next page.

Measurements within scale drawings are in mm.
Technical specifications and units of measure are subject to change.

Shower sets

Rainfinity Shower sets 3jet

Consisting of:		Included in	Code no.
	Casetta Soap dish/ shelf E	27674000 27673000 27672000 27671000	26511000
	Isiflex Shower hose 160 cm	27674000 27673000 27672000 27671000	28276000

Raindance Select S Shower set 150 3jet with shower bar 90 cm

Features

- consists of: hand shower, shower bar, shower hose, slider
- shower head size: 150 mm
- spray type: RainAir, CaresseAir, Mix
- convenient spray selection via Select button
- 90° position adjustable hand shower holder, pivots left and right, up and down
- maximum flow rate at 3 bar: 16,4 l/min
- minimum flow pressure: 1 bar
- operating pressure: min. 1 bar/max. 6 bar
- wall mounting: screw fastening
- wall supports made of plastic
- surface shower bar: chrome
- profile pipe: square
- bar width: 23 mm
- drilling distance 915 mm
- pivot connector prevents hose from tangling





Technologies



Spray types



Finish	Code no.
Chrome	26626000
White/Chrome	26626400

26626400	Surface shower bar: white.

Consisting of:		Included in	Code no.
	Raindance Select S Hand shower 150 3jet	26626XXX	28587XXX
	Unica Shower bar Raindance 90 cm with Isiflex shower hose 160 cm	26626XXX	27636000

Optional parts:		Finish	Code no.
	Raindance Wall bar spacer	Chrome	98993000
	Raindance Corner fitting set		28694000

Measurements within scale drawings are in mm.
Technical specifications and units of measure are subject to change.

Raindance Select S Shower sets 3jet

Features of all variants

- consists of: hand shower, shower bar, shower hose, slider, soap dish
- convenient spray selection via Select button
- 90° position adjustable hand shower holder, pivots left and right, up and down
- wall mounting: screw fastening
- wall supports made of plastic
- profile pipe: round
- shower bar diameter: 22 mm
- pivot connector prevents hose from tangling

90



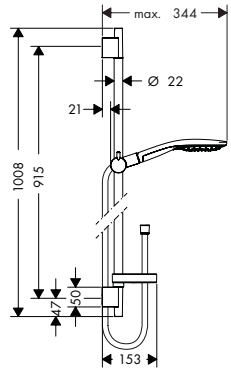

65



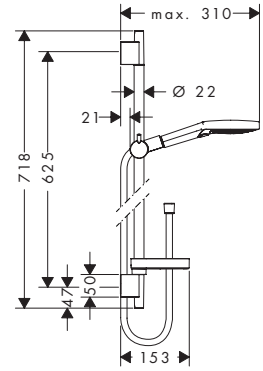

Sustainability

EcoSmart

Technologies

Select · Quick Clean · AirPower · XXL Performance

Spray types

Powder Rain · Rain Air · Rain · Whirl · Mix · Caresse Air

Overview variants

Version	Length shower bar (mm)	Shower head size	Number of sprays	Spray types	Max. flow rate at 3 bar (l/min)	Min. flow pressure (bar)	Finish	Code no.
90	1008	150	3	RainAir, CaresseAir, Mix	16.4	1.5	Chrome	27803000
90	1008	120	3	RainAir, Whirl, Rain	8.5	1.5	Chrome	26633000
90	1008	120	3	Rain, RainAir, Whirl	15	1	Chrome	26631000
							White/Chrome	26631400
90	1008	120	3	PowderRain, Rain, Whirl	11	1	Chrome	27667000
65	718	150	3	CaresseAir, Mix, RainAir	16.4	1.5	Chrome	27802000
65	718	120	3	Whirl, Rain, RainAir	8.5	1.5	Chrome	26632000
65	718	120	3	PowderRain, Rain, Whirl	11	1	Chrome	27654000
65	718	120	3	Rain, RainAir, Whirl	15	1	Chrome	26630000
							White/Chrome	26630400

Consisting of:	Included in	Code no.
Raindance Select S Hand shower 150 3jet	27803000 27802000	28587000
Raindance Select S Hand shower 120 3jet EcoSmart 9 l/min	26633000 26632000	26531000
Raindance Select S Hand shower 120 3jet	26631XXX 26630XXX	26530XXX
Raindance Select S Hand shower 120 3jet PowderRain	27667000 27654000	26014000
Unica Shower bar S Puro 90 cm with Isiflex shower hose 160 cm	27803000 26633000 26631XXX 27667000	28631000

For more information about this product, please see the next page.

Measurements within scale drawings are in mm.
Technical specifications and units of measure are subject to change.

Raindance Select S Shower sets 3jet

Consisting of:		Included in	Code no.
	Unica Shower bar S Puro 65 cm with Isiflex shower hose 160 cm	27802000 26632000 27654000 26630XXX	28632000
	Casetta Soap dish S Puro	27803000 26633000 26631XXX 27667000 27802000 26632000 27654000 26630XXX	28679000

Optional parts:		For	Finish	Code no.
	Wall bar spacer	27803XXX 26631XXX 27667XXX 27802XXX 27654XXX 26630XXX	Chrome	97450000

Raindance Select S Shower set 120 3jet with shower bar 90 cm

Features

- consists of: hand shower, shower bar, shower hose, slider
- shower head size: 125 mm
- spray type: Rain, RainAir, Whirl
- convenient spray selection via Select button
- 90° position adjustable hand shower holder, pivots left and right, up and down
- maximum flow rate at 3 bar: 15 l/min
- minimum flow pressure: 1,4 bar
- operating pressure: min. 0.14 MPa/max. 0.6 MPa
- metal hand shower holder
- wall mounting: screw fastening
- wall supports of metal
- profile pipe: round
- pipe length: 990 mm
- shower bar diameter: 25 mm
- drilling distance 915 mm
- wallbar could be also used as grab bar - load capacity of 200 kg
- pivot connector prevents hose from tangling



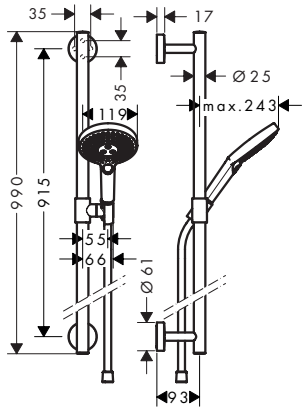

Technologies



Spray types



Finish	Code no.
White/Chrome	26322400

Consisting of:		Included in	Code no.
	Raindance Select S Hand shower 120 3jet	26322400	26530400
	Isiflex Shower hose 160 cm	26322400	28276000

Optional parts:		Finish	Code no.
	Unica Foot support Comfort	Chrome	26329000
	Unica Grab handle Comfort with shelf and shower holder	White/Chrome	26328400

Measurements within scale drawings are in mm.
Technical specifications and units of measure are subject to change.

Unica Grab handle Comfort with shelf and shower holder

Features

- consists of: grab bar, shelf, shower holder
- TÜV certified
- shower holder can be installed on both sides
- shower holder can be removed
- shelf made of plastic, finish white
- shelf can be removed for cleaning
- fixed holding position
- handle bar diameter: 25 mm
- material: brass



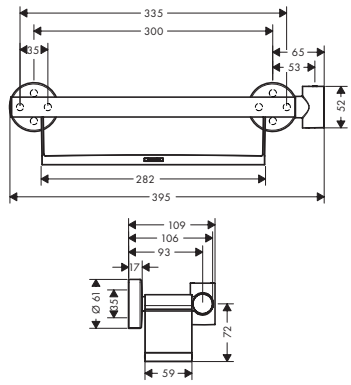

Finish	Code no.
White/Chrome	26328400

Optional parts:	Finish	Code no.
 Unica Foot support Comfort	Chrome	26329000

Unica Foot support Comfort

Features

- antislip foot rest
- wall-mounted
- material: metal
- length: 284 mm
- with mounting material
- concealed fastening
- drilling distance: 192 mm
- TÜV certified



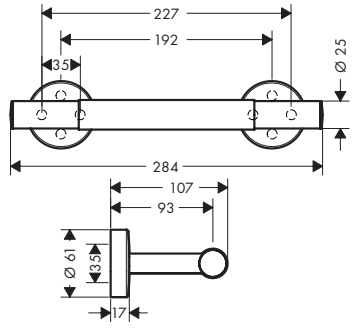

Finish	Code no.
Chrome	26329000

Measurements within scale drawings are in mm.
Technical specifications and units of measure are subject to change.

Raindance Select E Shower sets 3jet

Features of all variants

- consists of: hand shower, shower bar, shower hose, slider, soap dish
- convenient spray selection via Select button
- 90° position adjustable hand shower holder, pivots left and right, up and down
- wall mounting: screw fastening
- wall supports made of plastic
- profile pipe: round
- shower bar diameter: 22 mm
- pivot connector prevents hose from tangling

90



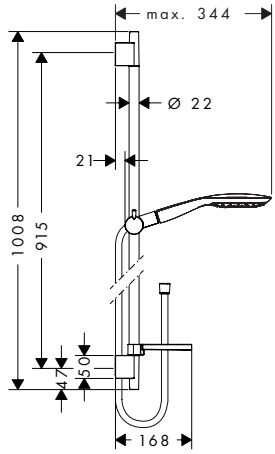

65



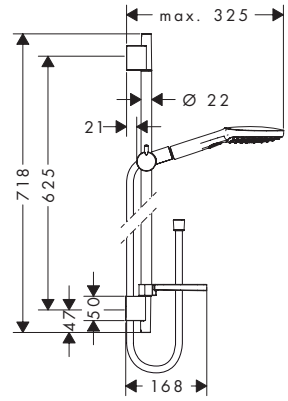

Sustainability

EcoSmart

Technologies

Select · Quick Clean · AirPower · XXL Performance

Spray types

Rain Air · Rain · Whirl · Mix · Caresse Air

Overview variants

Version	Length shower bar (mm)	Shower head size	Number of sprays	Spray types	Max. flow rate at 3 bar (l/min)	Min. flow pressure (bar)	Finish	Code no.
90	1008	150	3	RainAir, CaresseAir, Mix	16.4	1	Chrome	27857000
90	1008	120	3	RainAir, Rain, Whirl	8.5	1.5	Chrome	26623000
							White/Chrome	26623400
90	1008	120	3	RainAir, Rain, Whirl	14.4	1	Chrome	26621000
							White/Chrome	26621400
65	718	120	3	Rain, RainAir, Whirl	8.5	1.5	Chrome	26622000
							White/Chrome	26622400
65	718	120	3	Rain, RainAir, Whirl	14.4	1	Chrome	26620000
							White/Chrome	26620400

Consisting of:		Included in	Code no.
	Raindance Select E Hand shower 150 3jet	27857000	26550000
	Raindance Select E Hand shower 120 3jet EcoSmart	26623XXX 26622XXX	26521XXX
	Raindance Select E Hand shower 120 3jet	26621XXX 26620XXX	26520XXX
	Unica Shower bar S Puro 90 cm with Isiflex shower hose 160 cm	27857000 26623XXX 26621XXX	28631000
	Unica Shower bar S Puro 65 cm with Isiflex shower hose 160 cm	26622XXX 26620XXX	28632000
	Casetta Soap dish E	27857000 26623XXX 26621XXX 26622XXX 26620XXX	26519000

Measurements within scale drawings are in mm.
Technical specifications and units of measure are subject to change.

Raindance Select E Shower sets 3jet

Optional parts:		For	Finish	Code no.
	Wall bar spacer	27857XXX 26621XXX 26622XXX 26620XXX	Chrome	97450000

Raindance Select S Shower sets 3jet

Features of all variants

- shower head size: 125 mm
- spray type: Rain, RainAir, Whirl
- convenient spray selection via Select button
- shelf made of safety glass
- surface shelf: chrome
- 90° position adjustable hand shower holder, pivots left and right, up and down
- wall mounting: screw fastening
- wall supports made of plastic
- wall bar type: flat aluminium profile with safety glass finish
- surface shower bar: chrome
- profile pipe: square
- bar width: 41 mm
- pivot connector prevents hose from tangling

150



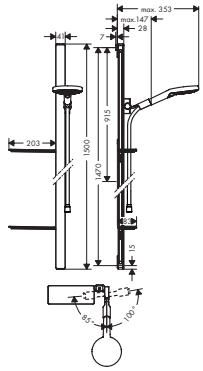

90



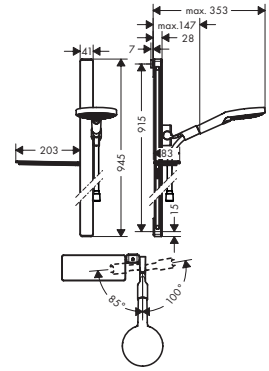

Sustainability



Technologies



Spray types



Overview variants

Version	Length shower bar (mm)	Shower head size	Max. flow rate at 3 bar (l/min)	Min. flow pressure (bar)	Shelf	Finish	Code no.
150	1500	120	15	1	2	Chrome	27646000
90	945	120	8.5	1.5	1	Chrome	27649000
90	945	120	15	1	1	Chrome	27648000
						White/Chrome	27648400

27648400	Surface shelf: white.
27648400	Surface shower bar: white.

Consisting of:		Included in	Code no.
	Raindance Select S Hand shower 120 3jet	27648XXX 27646000	26530XXX
	Raindance Select S Hand shower 120 3jet EcoSmart 9 l/min	27649000	26531000
	Unica Shower bar E 150 cm with Isiflex shower hose 160 cm and shelves	27646000 27649000	27645000
	Unica Shower bar E 90 cm with Isiflex shower hose 160 cm	27648XXX	27640XXX
	Casetta Soap dish/ shelf E	27648XXX 27646000 27649000	26511XXX

For more information about this product, please see the next page.

Measurements within scale drawings are in mm.
Technical specifications and units of measure are subject to change.

Shower sets

Raindance Select S Shower sets 3jet

Optional parts:		For	Finish	Code no.
	Casetta Soap dish/ shelf E	27649XXX	Chrome	26511000

Pulsify S Shower sets 1jet

Features of all variants

- consists of: baton hand shower, shower bar, shower hose, slider
- shower head size: 98 x 24 mm
- spray type: PowderRain
- minimum flow pressure: 0,5 bar
- operating pressure: min. 0,5 bar/max. 6 bar
- height-adjustable slider with locking push-button slider
- hand shower holder made of plastic/metal
- hand shower holder with locking mechanism
- wall mounting: screw fastening
- wall supports made of plastic
- shower hose with conical nut on both ends
- pivot connector prevents hose from tangling

90

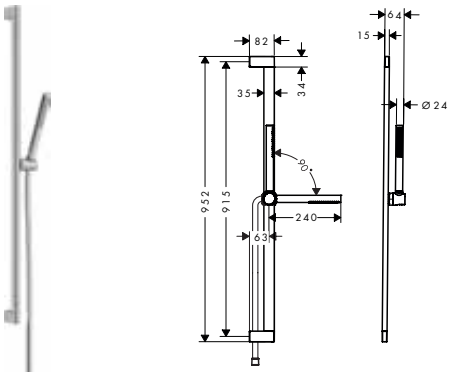

65

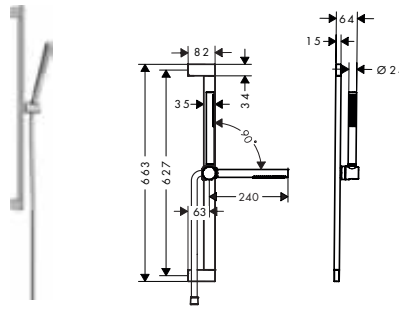

Sustainability

Eco Smart+ | EcoSmart

Technologies

Quick Clean

Spray types

Powder Rain

Overview variants

	Version	Length shower bar (mm)	Shower head size	Spray types	Max. flow rate at 3 bar (l/min)	Finish	Available from	Code no.
	90	950	100	PowderRain	5.4	Chrome	Q1/2024	24383000
						Matt Black	Q1/2024	24383670
						Matt White	Q1/2024	24383700
	90	950	100	PowderRain	8.5	Chrome	Q1/2024	24382000
						Matt Black	Q1/2024	24382670
						Matt White	Q1/2024	24382700
	65	663	100	PowderRain	5.4	Chrome	Q1/2024	24373000
						Matt Black	Q1/2024	24373670
						Matt White	Q1/2024	24373700
	65	663	100	PowderRain	8.5	Chrome	Q1/2024	24372000
						Matt Black	Q1/2024	24372670
						Matt White	Q1/2024	24372700

Consisting of:		Included in	Code no.
	Pulsify S Baton hand shower 100 1jet EcoSmart+	24383XXX 24373XXX	24126XXX
	Pulsify S Baton hand shower 100 1jet EcoSmart	24382XXX 24372XXX	24125XXX
	Unica Shower bar S Puro 90 cm with easy slide hand shower holder and Isiflex shower hose 160 cm	24383XXX 24382XXX	24405XXX
	Unica Shower bar S Puro 65 cm with easy slide hand shower holder and Isiflex shower hose 160 cm	24373XXX 24372XXX	24402XXX

Measurements within scale drawings are in mm.
Technical specifications and units of measure are subject to change.

Pulsify Select S Shower sets 3jet

Features of all variants

- consists of: hand shower, slider, shower bar, shower hose
- shower head size: 105 mm
- spray type: PowderRain, IntenseRain, Massage spray
- convenient spray selection via Select button
- height-adjustable slider with locking push-button slider
- hand shower holder made of plastic/metal
- wall mounting: screw fastening
- wall supports made of plastic
- profile pipe: round
- shower bar diameter: 22 mm
- pivot connector prevents hose from tangling

90



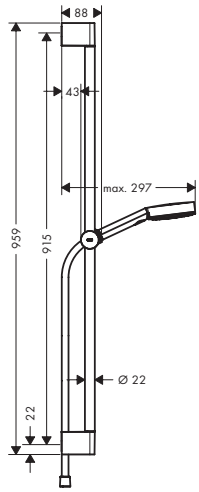

65



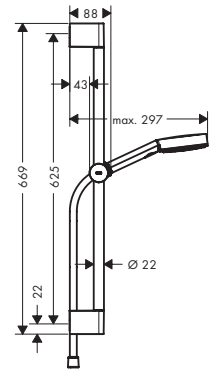

Sustainability

EcoSmart

Technologies

Push slider · Select · Quick Clean · XXL Performance

Spray types

Powder Rain · Intense Rain · Massage

Overview variants

Version	Length shower bar (mm)	Shower head size	Shower effect	Spray types	Max. flow rate at 3 bar (l/min)	Min. flow pressure (bar)	Finish	Code no.
90	959	105	Relaxation	PowderRain, IntenseRain, Massage spray	8.2	1.2	Chrome	24171000
							Matt Black	24171670
							Matt White	24171700
90	959	105	Relaxation	PowderRain, IntenseRain, Massage spray	11.4	1	Chrome	24170000
							Matt Black	24170670
							Matt White	24170700
65	669	105	Relaxation	PowderRain, IntenseRain, Massage spray	8.2	1.2	Chrome	24161000
							Matt Black	24161670
							Matt White	24161700
65	669	105	Relaxation	PowderRain, IntenseRain, Massage spray	11.4	1	Chrome	24160000
							Matt Black	24160670
							Matt White	24160700

Consisting of:		Included in	Code no.
	Pulsify Select S Hand shower 105 3jet Relaxation EcoSmart	24171XXX 24161XXX	24111XXX
	Pulsify Select S Hand shower 105 3jet Relaxation	24170XXX 24160XXX	24110XXX
	Unica Shower bar Pulsify S 90 cm with push slider and Isiflex shower hose 160 cm	24171000 24170000	24401000
	Unica Shower bar Pulsify S 65 cm with push slider and Isiflex shower hose 160 cm	24161000 24160000	24400000

Measurements within scale drawings are in mm.
Technical specifications and units of measure are subject to change.

Shower sets

Pulsify E Shower sets 1jet

Features of all variants

- consists of: baton hand shower, shower bar, shower hose, slider
- shower head size: 100 x 25 mm
- spray type: PowderRain
- hand shower holder for right- and left-hand installation
- metal hand shower holder
- hand shower holder with locking mechanism
- wall mounting: screw fastening
- wall supports made of plastic
- wall bar type: swivelling shower bar
- profile pipe: cubic
- shower hose with conical nut on both ends
- pivot connector prevents hose from tangling

90

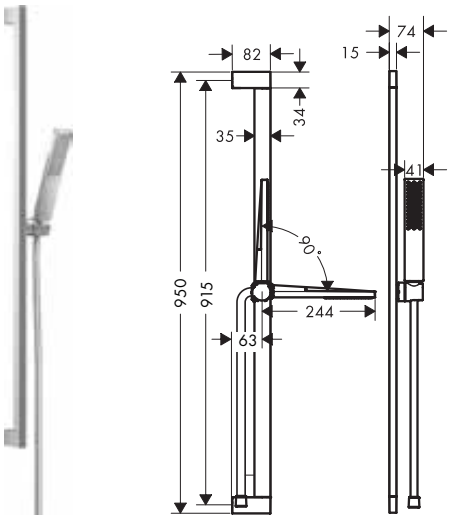

65

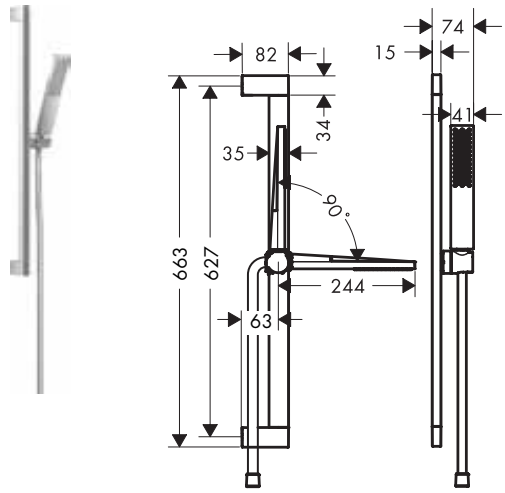

Sustainability

Eco Smart+ | EcoSmart

Technologies

Quick Clean

Spray types

Powder Rain

Overview variants

	Version	Length shower bar (mm)	Shower head size	Number of sprays	Spray types	Max. flow rate at 3 bar (l/min)	Min. flow pressure (bar)	Finish	Code no.
Eco Smart+	90	950	100	1	PowderRain	5	0.9	Chrome	24381000
								Matt Black	24381670
								Matt White	24381700
EcoSmart	90	950	100	1	PowderRain	8	0.8	Chrome	24380000
								Matt Black	24380670
								Matt White	24380700
Eco Smart+	65	663	100	1	PowderRain	5	0.9	Chrome	24371000
								Matt Black	24371670
								Matt White	24371700
EcoSmart	65	663	100	1	PowderRain	8	0.8	Chrome	24370000
								Matt Black	24370670
								Matt White	24370700

Consisting of:		Included in	Code no.
	Pulsify E Baton hand shower 100 1jet EcoSmart+	24381XXX 24371XXX	24321XXX
	Pulsify E Baton hand shower 100 1jet EcoSmart	24380XXX 24370XXX	24320XXX
	Unica Shower bar E Puro 65 cm with easy slide hand shower holder and Isiflex shower hose 160 cm	24381XXX 24371XXX 24370XXX	24404XXX
	Unica Shower bar E Puro 90 cm with easy slide hand shower holder and Isiflex shower hose 160 cm	24380XXX	24403XXX

Measurements within scale drawings are in mm.
Technical specifications and units of measure are subject to change.

Croma Select S Shower sets Multi, Vario, 1jet

Features of all variants

- shower head size: 110 mm
- wall mounting: screw fastening
- wall supports made of plastic
- profile pipe: round
- shower bar diameter: 22 mm
- pivot connector prevents hose from tangling

90



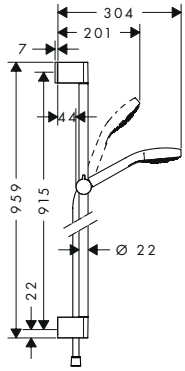

65



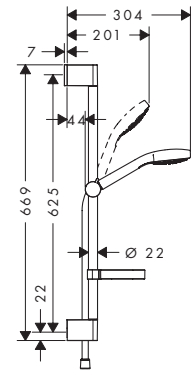

Sustainability

EcoSmart

Technologies

Select · Quick Clean · XXL Performance

Spray types

SoftRain · Rain · Intense Rain · Massage · Turbo Rain

Overview variants

Version	Length shower bar (mm)	Number of sprays	Spray types	Max. flow rate at 3 bar (l/min)	Min. flow pressure (bar)	soap dish	Select	Finish	Code no.
90 Multi	959	3	IntenseRain, SoftRain, Massage spray	9	1.2	–	■	White/Chrome	26571400
90 Multi	959	3	IntenseRain, SoftRain, Massage spray	16	1	–	■	White/Chrome	26570400
90 Vario	959	3	Rain, TurboRain, IntenseRain	9	1.2	–	■	White/Chrome	26573400
90 Vario	959	3	Rain, TurboRain, IntenseRain	14.7	1	–	■	White/Chrome	26572400
90 1jet	959	1	Rain	9	1.2	–	–	White/Chrome	26575400
90 1jet	959	1	Rain	16	1	–	–	White/Chrome	26574400
65 Multi	669	3	IntenseRain, SoftRain, Massage spray	9	1	–	■	White/Chrome	26561400
65 Multi	669	3	IntenseRain, SoftRain, Massage spray	16	1	–	■	White/Chrome	26560400
65 Vario	669	3	Rain, TurboRain, IntenseRain	9	1.2	–	■	White/Chrome	26563400
65 Vario	669	3	Rain, TurboRain, IntenseRain	14.7	1	■	■	White/Chrome	26566400
65 Vario	669	3	Rain, TurboRain, IntenseRain	14.7	1	–	■	White/Chrome	26562400
65 1jet	669	1	Rain	9	1.2	–	–	White/Chrome	26565400
65 1jet	669	1	Rain	16	1	–	–	White/Chrome	26564400

Consisting of:		Included in	Code no.
	Croma Select S Hand shower 110 Multi EcoSmart 9 l/min	26571400 26561400	26801400
	Croma Select S Hand shower 110 Multi	26570400 26560400	26800400

For more information about this product, please see the next page.

Measurements within scale drawings are in mm.
Technical specifications and units of measure are subject to change.

Shower sets

Croma Select S Shower sets Multi, Vario, 1jet

Consisting of:		Included in	Code no.
	Croma Select S Hand shower 110 Vario EcoSmart 9 l/min	26573400 26563400	26803400
	Croma Select S Hand shower 110 Vario	26572400 26566400 26562400	26802400
	Croma S Hand shower 110 1jet EcoSmart 9 l/min	26575400 26565400	26805400
	Croma S Hand shower 110 1jet	26574400 26564400	26804400
	Unica Shower bar Crometta 65 cm with Metaflex shower hose 160 cm	26561400 26563400 26565400	27615000
	Casetta Soap dish C	26566400	28678000

Optional parts:		Finish	Code no.
	Wall bar spacer	Chrome	97450000

Croma Select E Shower sets Multi, Vario, 1jet

Features of all variants

- shower head size: 110 mm
- hand shower holder inclination angle can be adjusted by 45°
- wall mounting: screw fastening
- wall supports made of plastic
- profile pipe: round
- shower bar diameter: 22 mm
- pivot connector prevents hose from tangling

90



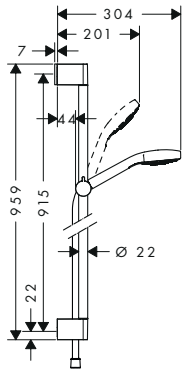

65



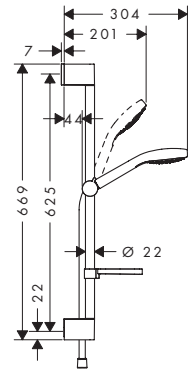

Sustainability

EcoSmart

Technologies

Select · Quick Clean · XXL Performance

Spray types

SoftRain · Rain · Intense Rain · Massage · Turbo Rain

Overview variants

Version	Length shower bar (mm)	Number of sprays	Spray types	Max. flow rate at 3 bar (l/min)	Min. flow pressure (bar)	soap dish	Select	Finish	Code no.
90 Vario	959	3	TurboRain, IntenseRain, Rain	9	1.2	–	■	White/Chrome	26593400
90 Vario	959	3	TurboRain, IntenseRain, Rain	14.7	1	–	■	White/Chrome	26592400
90 Multi	959	3	SoftRain, IntenseRain, Massage spray	9	1	–	■	White/Chrome	26591400
90 Multi	959	3	SoftRain, IntenseRain, Massage spray	16	1	–	■	White/Chrome	26590400

Measurements within scale drawings are in mm.
Technical specifications and units of measure are subject to change.

Croma Select E Shower sets Multi, Vario, 1jet

Overview variants

Version	Length shower bar (mm)	Number of sprays	Spray types	Max. flow rate at 3 bar (l/min)	Min. flow pressure (bar)	soap dish	Select	Finish	Code no.
90 1jet	959	3	Rain	9	1.2	–	–	White/Chrome	26595400
90 1jet	959	1	Rain	16	1	–	–	White/Chrome	26594400
65 Vario	669	3	Rain, TurboRain, IntenseRain	9	1	–	■	White/Chrome	26583400
65 Vario	669	3	TurboRain, IntenseRain, Rain	14.7	1	■	■	White/Chrome	26586400
65 Vario	669	3	TurboRain, IntenseRain, Rain	14.7	1	–	■	White/Chrome	26582400
65 Multi	669	3	IntenseRain, Massage spray, SoftRain	9	1	–	■	White/Chrome	26581400
65 Multi	669	3	SoftRain, IntenseRain, Massage spray	16	1	–	■	White/Chrome	26580400
65 1jet	669	1	Rain	16	1	–	–	White/Chrome	26584400

Consisting of:		Included in	Code no.
	Unica Shower bar Croma 90 cm	26592400 26591400 26590400	26506000
	Unica Shower bar Croma 65 cm	26582400 26581400 26580400	26505000
	Croma Select E Hand shower 110 Vario EcoSmart 9 l/min	26593400 26583400	26813400
	Croma Select E Hand shower 110 Vario	26592400 26586400 26582400	26812400
	Croma Select E Hand shower 110 Multi EcoSmart 9 l/min	26591400 26581400	26811400
	Croma Select E Hand shower 110 Multi	26590400 26580400	26810400
	Croma E Hand shower 110 1jet EcoSmart 9 l/min	26595400	26815400
	Croma E Hand shower 110 1jet	26594400 26584400	26814400
	Isiflex Shower hose 160 cm	26593400 26592400 26591400 26590400 26583400 26582400 26581400 26580400	28276000
	Casetta Soap dish E	26586400	26519000

Optional parts:		Finish	Code no.
	Wall bar spacer	Chrome	97450000

Measurements within scale drawings are in mm.
Technical specifications and units of measure are subject to change.

Shower sets

Croma 100 Shower sets Multi, Vario

Features of all variants

- consists of: hand shower, shower bar, shower hose, slider, soap dish
- shower head size: 100 mm
- 90° position adjustable hand shower holder, pivots left and right, up and down
- minimum flow pressure: 1 bar
- operating pressure: min. 1 bar/max. 6 bar
- wall mounting: screw fastening
- wall supports made of plastic
- profile pipe: round
- shower bar diameter: 22 mm
- pivot connector prevents hose from tangling

90



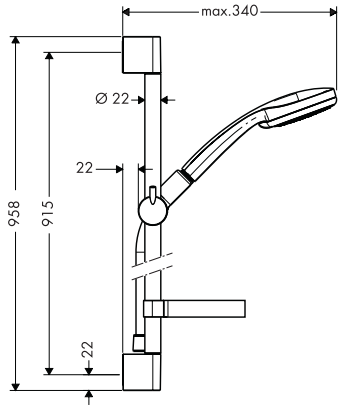

65



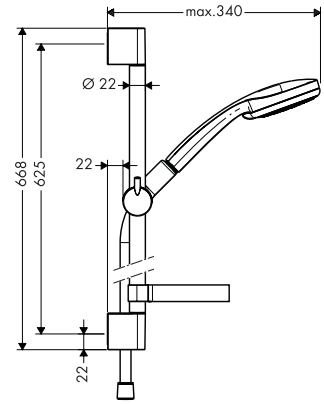

Sustainability

EcoSmart

Technologies

Quick Clean

XXL Performance

Spray types

Normal | Rain | Shampoo | Massage | Mono Rain

Overview variants

Version	Length shower bar (mm)	Shower head size	Number of sprays	Spray types	Max. flow rate at 3 bar (l/min)	Min. flow pressure (bar)	Finish	Code no.
90 Multi	668	100	3	Rain, MonoRain, Massage spray	19	1	Chrome	27774000
90 Vario	990	100	3	Rain, Shampoo spray, normal spray, Massage spray	9	1	Chrome	27653000
90 Vario	959	100	4	Rain, Shampoo spray, normal spray, Massage spray	18	1	Chrome	27771000
90 1jet	990	100	1	Rain	16	1	Chrome	27724000
65 Vario	668	100	4	Rain, Shampoo spray, normal spray, Massage spray	9	1	Chrome	27776000
65 Multi	668	100	3	Rain, MonoRain, Massage spray	19	1	Chrome	27775000
65 Vario	668	100	4	Rain, Shampoo spray, normal spray, Massage spray	18	1	Chrome	27772000
65 1jet	668	100	1	Rain	16	1	Chrome	27717000

Consisting of:		Included in	Code no.
	Croma 100 Hand shower Multi	27774000 27775000	28536000
	Croma 100 Hand shower Vario EcoSmart 9 l/min	27653000 27776000	28537000
	Croma 100 Hand shower Vario	27771000 27772000	28535000
	Croma 100 Hand shower 1jet	27724000 27717000	28580000

Measurements within scale drawings are in mm.
Technical specifications and units of measure are subject to change.

Croma 100 Shower sets Multi, Vario

Consisting of:		Included in	Code no.
	Unica Shower bar C 90 cm with Isiflex shower hose 160 cm	27774000 27653000 27771000 27724000	27610000
	Unica Shower bar C 65 cm with Isiflex shower hose 160 cm	27776000 27775000 27772000 27717000	27611000
	Casetta Soap dish C	27774000 27653000 27771000 27724000 27776000 27775000 27772000 27717000	28678000
	Isiflex Shower hose 160 cm	27776000	28276000

Optional parts:		Finish	Code no.
	Wall bar spacer	Chrome	97450000

Crometta Shower sets Vario, 1jet

Features of all variants

- shower head size: 100 mm
- hand shower holder inclination angle can be adjusted by 45°
- minimum flow pressure: 1 bar
- wall mounting: screw fastening
- wall supports made of plastic
- profile pipe: round
- shower bar diameter: 22 mm
- pivot connector prevents hose from tangling

90



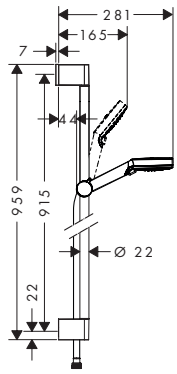

65



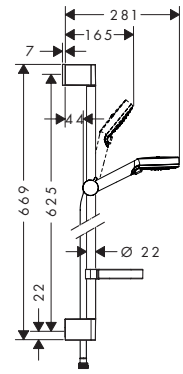

Sustainability

Eco Smart+ | EcoSmart

Technologies

Quick Clean | XXL Performance

Spray types

Rain | Intense Rain

Overview variants

Version	Length shower bar (mm)	Number of sprays	Spray types	Max. flow rate at 3 bar (l/min)	Min. flow pressure (bar)	soap dish	Finish	Code no.
90 Vario	959	2	Rain, IntenseRain	9	1	–	White/Chrome	26538400
90 Vario	959	2	Rain, IntenseRain	13.8	1	–	White/Chrome	26536400
90 1jet	959	1	Rain	9	1	–	White/Chrome	26539400
90 1jet	959	1	Rain	14	1	–	White/Chrome	26537400
65 Vario	669	2	Rain, IntenseRain	5.7	1	–	White/Chrome	26555400
65 Vario	669	2	Rain, IntenseRain	9	1	–	White/Chrome	26534400
65 Vario	669	2	Rain, IntenseRain	13.8	1	■	White/Chrome	26553400

For more information about this product, please see the next page.

Measurements within scale drawings are in mm.
Technical specifications and units of measure are subject to change.

Cromette Shower sets Vario, 1jet

Overview variants

Version	Length shower bar (mm)	Number of sprays	Spray types	Max. flow rate at 3 bar (l/min)	Min. flow pressure (bar)	soap dish	Finish	Code no.
65 Vario	669	2	Rain, IntenseRain	13.8	1	–	White/Chrome	26532400
65 1jet	669	1	Rain	9	1	–	White/Chrome	26535400
65 1jet	669	1	Rain	14	1	–	White/Chrome	26533400

Consisting of:		Included in	Code no.
	Crometta Hand shower 100 Vario EcoSmart 9 l/min	26538400 26534400	26332400
	Crometta Hand shower 100 Vario	26536400 26553400 26532400	26330400
	Crometta Hand shower 100 1jet EcoSmart 9 l/min	26539400 26535400	26333400
	Crometta Hand shower 100 1jet	26537400 26533400	26331400
	Crometta Hand shower 100 Vario Green 6 l/min	26555400	26336400
	Unica Shower bar Croma 90 cm	26538400 26536400 26539400 26537400	26506000
	Unica Shower bar Croma 65 cm	26555400 26534400 26553400 26532400 26535400 26533400	26505000
	Isiflex Shower hose 160 cm	26538400 26536400 26539400 26537400 26555400 26534400 26553400 26532400 26535400 26533400	28276000
	Casetta Soap dish C	26553400	28678000

Optional parts:		Finish	Code no.
	Wall bar spacer	Chrome	97450000

Measurements within scale drawings are in mm.
Technical specifications and units of measure are subject to change.

Crometta 85 Shower sets Multi, Vario, 1jet

Features of all variants

- shower head size: 85 mm
- 90° position adjustable hand shower holder, pivots left and right, up and down
- minimum flow pressure: 1 bar
- operating pressure: min. 1 bar/max. 6 bar
- wall mounting: screw fastening
- wall supports made of plastic
- profile pipe: round
- shower bar diameter: 22 mm

90



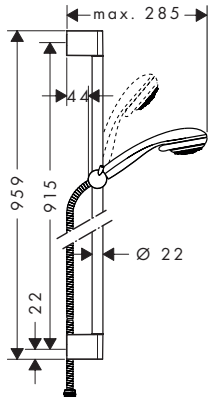

65



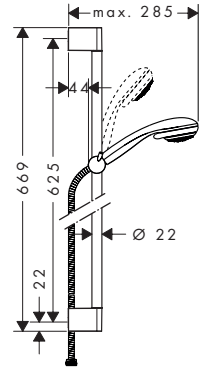

Sustainability

Eco Smart+

Technologies

Quick Clean

AirPower

Spray types

Normal

Massage

Mono Rain

Overview variants

Version	Length shower bar (mm)	Number of sprays	Spray types	Max. flow rate at 3 bar (l/min)	Min. flow pressure (bar)	soap dish	Finish	Code no.
90 Multi	959	3	Massage spray, MonoRain, normal spray	16	1	–	Chrome	27766000
65 Vario	669	2	normal spray, Vario spray	17	1	■	Chrome	27764000
65 Vario	669	2	normal spray, Vario spray	17	1	–	Chrome	27763000
65 1jet	669	1	normal spray	6	1	–	Chrome	27652000
65 1jet	669	1	normal spray	16	1	–	Chrome	27728000

Consisting of:		Included in	Code no.
	Crometta 85 Hand shower Multi	27766000	28563000
	Crometta 85 Hand shower Vario	27764000 27763000	28562000
	Crometta 85 Hand shower Mono	27728000	28585000
	Unica Shower bar Crometta 65 cm with Metaflex shower hose 160 cm	27764000 27763000 27652000 27728000	27615000
	Casetta Soap dish S	27764000	28684000

Optional parts:		For	Finish	Code no.
	Casetta Soap dish C	27766XXX 27763XXX 27652XXX 27728XXX	Chrome	28678000
	Wall bar spacer		Chrome	97450000

Measurements within scale drawings are in mm.
Technical specifications and units of measure are subject to change.

Vernis Blend Shower sets Vario with shower bar Crometta

Features of all variants

- consists of: hand shower, shower bar, shower hose, slider
- shower head size: 100 mm
- spray type: Rain, IntenseRain
- spray type adjustment by turning spray disc
- minimum flow pressure: 1 bar
- operating pressure: min. 1 bar/max. 6 bar
- wall mounting: screw fastening
- wall supports made of plastic
- profile pipe: round
- pipe length: 669 mm
- shower bar diameter: 22 mm
- drilling distance 625 mm
- shower hose with conical nut on both ends



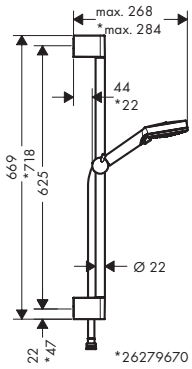

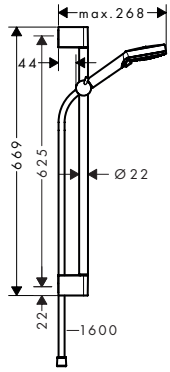

Sustainability

EcoSmart

Technologies

Quick Clean

XXL Performance

Spray types

Rain

Intense Rain

Overview variants

Version	Length shower bar (mm)	Shower head size	Number of sprays	Spray types	Max. flow rate at 3 bar (l/min)	Min. flow pressure (bar)	Finish	Code no.
65	669	100	2	Rain, IntenseRain	9.7	1	Chrome	26279000
65	669	100	2	Rain, IntenseRain	15.2	1	Chrome	26275000
65	669	100	2	Rain, IntenseRain	10.5	1	Chrome	26275007

Consisting of:	Included in	Code no.
Vernis Blend Hand shower 100 Vario EcoSmart	26279000	26340000
Vernis Blend Hand shower 100 Vario	26275CHN 26275XXX	26270XXX
Unica Shower bar Crometta 65 cm with Metaflex shower hose 160 cm	26279000 26275000	27615000

Measurements within scale drawings are in mm.
Technical specifications and units of measure are subject to change.

Vernis Blend Shower sets Vario with shower bar S Puro

Features of all variants

- consists of: hand shower, shower bar, shower hose, slider
- shower head size: 100 mm
- spray type: Rain, IntenseRain
- spray type adjustment by turning spray disc
- hand shower holder inclination angle can be adjusted by 45°
- minimum flow pressure: 1 bar
- operating pressure: min. 1 bar/max. 6 bar
- wall mounting: screw fastening
- wall supports made of plastic
- profile pipe: round
- pipe length: 718 mm
- shower bar diameter: 22 mm
- drilling distance 625 mm
- shower hose with conical nut on both ends
- pivot connector prevents hose from tangling



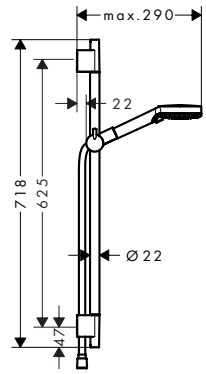

Sustainability

EcoSmart

Technologies

Quick Clean

XXL Performance

Spray types

Rain

Intense Rain

Overview variants

Version	Length shower bar (mm)	Shower head size	Number of sprays	Spray types	Max. flow rate at 3 bar (l/min)	Min. flow pressure (bar)	Finish	Code no.
65	718	100	2	Rain, IntenseRain	9.7	1	Matt Black	26423670
65	718	100	2	Rain, IntenseRain	15.2	1	Matt Black	26422670
65	718	100	2	Rain, IntenseRain	10.5	1	Matt Black	26422677

Consisting of:	Included in	Code no.
Vernis Blend Hand shower 100 Vario EcoSmart	26423670	26340670
Vernis Blend Hand shower 100 Vario	26422XXX 26422CHN	26270XXX
Unica Shower bar S Puro 65 cm with Isiflex shower hose 160 cm	26423670 26422670	28632670

Measurements within scale drawings are in mm.
Technical specifications and units of measure are subject to change.

Shower sets

Raindance Select S Shower systems 3jet with thermostat

Features of all variants

- consists of: hand shower, shower thermostat, shower bar, slider, soap dish, shower hose
- shower head size: 150 mm
- convenient spray selection via Select button
- spray type hand shower: RainAir, CaresseAir, Mix
- maximum flow rate at 3 bar: 16,4 l/min
- minimum flow pressure: 1,5 bar
- max. operating pressure: 6 bar
- profile pipe: round
- shower bar diameter: 22 mm
- pivot connector prevents hose from tangling
- 90° position adjustable hand shower holder, pivots left and right, up and down
- in case of installation on existing G ¾ connections, adaptor no.02026000 must be used

90



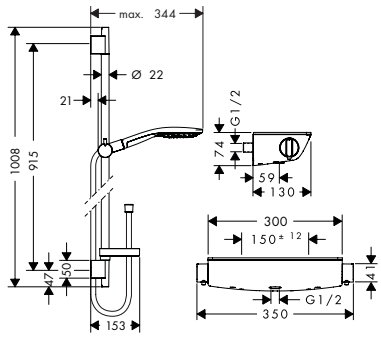

65



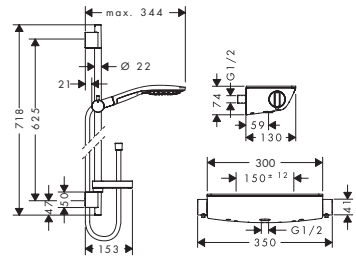

Technologies



Spray types



Overview variants

Version	Length shower bar (mm)	Shower head size	Max. flow rate at 3 bar (l/min)	Min. flow pressure (bar)	Finish	Code no.
90	1008	150	16.4	1.5	Chrome	27037000
					White/Chrome	27037400
65	718	150	16.4	1.5	Chrome	27036000
					White/Chrome	27036400

Consisting of:		Included in	Code no.
	Ecostat Select Shower thermostat for exposed installation	27037XXX 27036XXX	13161XXX
	Raindance Select S Hand shower 150 3jet	27037XXX 27036XXX	28587XXX
	Unica Shower bar S Puro 90 cm with Isiflex shower hose 160 cm	27037XXX	28631000
	Unica Shower bar S Puro 65 cm with Isiflex shower hose 160 cm	27036XXX	28632000
	Casetta Soap dish S Puro	27037XXX 27036XXX	28679000

Optional parts:		Finish	Code no.
	S-connections adapter G ¾ for renovation	Chrome	02026000

Measurements within scale drawings are in mm.
Technical specifications and units of measure are subject to change.

Raindance Select E Shower systems 3jet with thermostat

Features of all variants

- consists of: hand shower, shower thermostat, shower bar, slider, soap dish, shower hose
- shower head size: 120 mm
- convenient spray selection via Select button
- spray type hand shower: Rain, RainAir, Whirl
- maximum flow rate at 3 bar: 14,4 l/min
- minimum flow pressure: 1 bar
- max. operating pressure: 6 bar
- profile pipe: round
- shower bar diameter: 22 mm
- pivot connector prevents hose from tangling
- 90° position adjustable hand shower holder, pivots left and right, up and down
- in case of installation on existing G ¾ connections, adaptor no.02026000 must be used
- CoolContact thermostat: Prevents the housing from heating up, making showering even safer

90



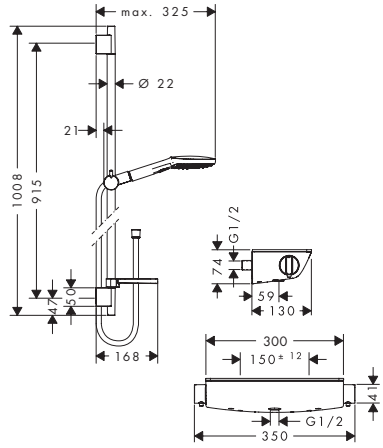

65



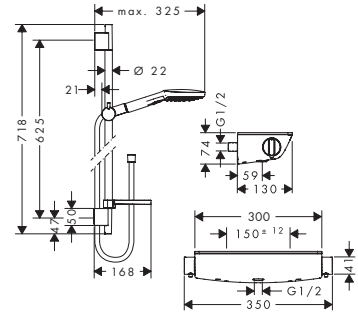

Technologies



Spray types



Overview variants

Version	Length shower bar (mm)	Shower head size	Max. flow rate at 3 bar (l/min)	Min. flow pressure (bar)	Finish	Code no.
90	1008	120	14.4	1	Chrome	27039000
					White/Chrome	27039400
65	718	120	14.4	1	Chrome	27038000
					White/Chrome	27038400

Consisting of:		Included in	Code no.
	Ecostat Select Shower thermostat for exposed installation	27039XXX 27038XXX	13161XXX
	Casetta Soap dish E	27039XXX 27038XXX	26519000
	Raindance Select E Hand shower 120 3jet	27039XXX 27038XXX	26520XXX
	Unica Shower bar S Puro 90 cm with Isiflex shower hose 160 cm	27039XXX	28631000
	Isiflex Shower hose 160 cm	27038XXX	28276000

Optional parts:		Finish	Code no.
	S-connections adapter G ¾ for renovation	Chrome	02026000

Measurements within scale drawings are in mm.
Technical specifications and units of measure are subject to change.

Pulsify Select S Shower systems 3jet with thermostat

Features of all variants

- consists of: hand shower, shower thermostat, shower bar, slider, shower hose
- shower head size: 105 mm
- convenient spray selection via Select button
- spray type hand shower: PowderRain, IntenseRain, Massage spray
- maximum flow rate at 3 bar: 11,4 l/min
- max. operating pressure: 6 bar
- description thermostat: ShowerTablet Select 400
- protection against scalding: safety stop at 40 °C
- adjustable hot water limitation
- intrinsically safe against backflow
- profile pipe: round
- shower bar diameter: 22 mm
- wall supports made of plastic
- nuts shower hose: shower hose with conical nut on both ends
- pivot connector prevents hose from tangling
- temperature and volume control, Select push-button on/off control for 1 outlet, hand shower holder integrated in the shelf
- CoolContact thermostat: Prevents the housing from heating up, making showering even safer

90



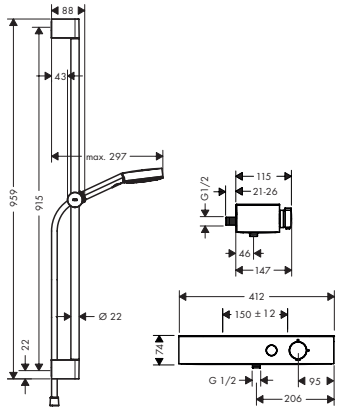

65



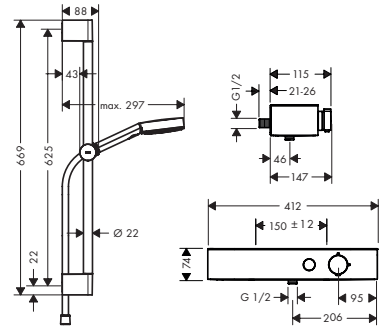

Technologies



Spray types



Overview variants

Version	Length shower bar (mm)	Shower effect	Max. flow rate at 3 bar (l/min)	Finish	Code no.
90	959	Relaxation	11.4	Chrome	24270000
65	669	Relaxation	11.4	Chrome	24260000

Consisting of:		Included in	Code no.
	Pulsify Select S Hand shower 105 3jet Relaxation	24270000 24260000	24110000
	ShowerTablet Select Shower thermostat 400 for exposed installation	24270000 24260000	24360000
	Unica Shower bar Pulsify S 90 cm with push slider and Isiflex shower hose 160 cm	24270000	24401000
	Unica Shower bar Pulsify S 65 cm with push slider and Isiflex shower hose 160 cm	24260000	24400000

Optional parts:		Finish	Code no.
	S-connections adapter G ¾ for renovation	Chrome	02026000

Measurements within scale drawings are in mm.
Technical specifications and units of measure are subject to change.

Croma Select S Shower systems Vario with thermostat

Features of all variants

- consists of: hand shower, shower thermostat, shower bar, slider, shower hose
- shower head size: 110 mm
- convenient spray selection via Select button
- spray type hand shower: Rain, IntenseRain, TurboRain
- maximum flow rate at 3 bar: 14,7 l/min
- minimum flow pressure: 1 bar
- max. operating pressure: 6 bar
- profile pipe: round
- shower bar diameter: 22 mm
- wall supports made of plastic
- pivot connector prevents hose from tangling
- hand shower holder inclination angle can be adjusted by 45°

90



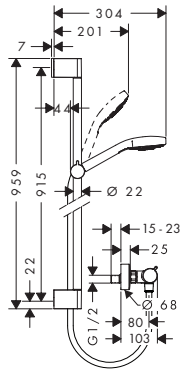

65



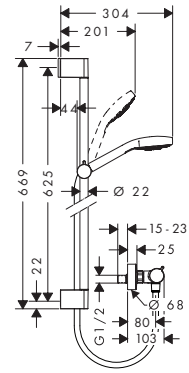

Technologies



Spray types



Overview variants

Version	Length shower bar (mm)	Shower head size	Max. flow rate at 3 bar (l/min)	Min. flow pressure (bar)	Finish	Code no.
90 Vario	959	110	14.7	1	White/Chrome	27014400
65 Vario	669	110	14.7	1	White/Chrome	27013400

Consisting of:		Included in	Code no.
	Ecostat Shower thermostat Comfort for exposed installation	27014400 27013400	13116000
	Croma Select S Hand shower 110 Vario	27014400 27013400	26802400

Measurements within scale drawings are in mm.
Technical specifications and units of measure are subject to change.

Croma Select S Shower system for exposed installation Vario with Ecostat 1001 CL thermostat and shower bar 72 cm

Features

- consists of: hand shower, shower thermostat, shower bar, slider, shower hose
- shower head size: 110 mm
- convenient spray selection via Select button
- spray type hand shower: Rain, IntenseRain, TurboRain
- maximum flow rate at 3 bar: 14,7 l/min
- minimum flow pressure: 1,2 bar
- max. operating pressure: 6 bar
- profile pipe: round
- shower bar diameter: 22 mm
- variable drilling hole distance: 400 - 660 mm
- wall supports made of plastic
- pivot connector prevents hose from tangling
- 90° position adjustable hand shower holder, pivots left and right, up and down



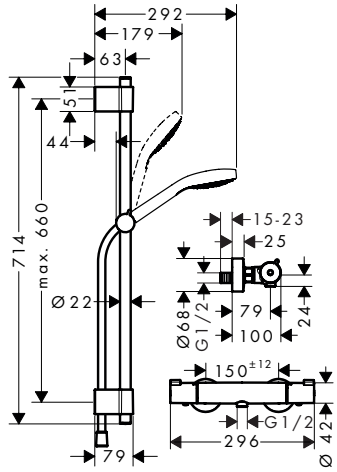

Technologies



Spray types



Finish	Code no.
White/Chrome	27833400

Consisting of:		Included in	Code no.
	Ecostat Shower thermostat 1001 CL for exposed installation	27833400	13211000
	Croma Select S Hand shower 110 Vario	27833400	26802400
	Unica Shower bar Varia 72 cm	27833400	27355000
	Isiflex Shower hose 160 cm	27833400	28276000

Measurements within scale drawings are in mm.
Technical specifications and units of measure are subject to change.

Croma Select E Shower systems Vario with thermostat

Features of all variants

- consists of: hand shower, shower thermostat, shower bar, slider, shower hose
- shower head size: 110 mm
- convenient spray selection via Select button
- maximum flow rate at 3 bar: 14,7 l/min
- minimum flow pressure: 1 bar
- max. operating pressure: 6 bar
- description thermostat: Ecostat Comfort
- EcoStop button: EcoStop button limits the water consumption to 10 l/min
- protection against scalding: safety stop at 40°C
- intrinsically safe against backflow
- profile pipe: round
- shower bar diameter: 22 mm
- wall supports made of plastic
- pivot connector prevents hose from tangling
- hand shower holder inclination angle can be adjusted by 45°

90



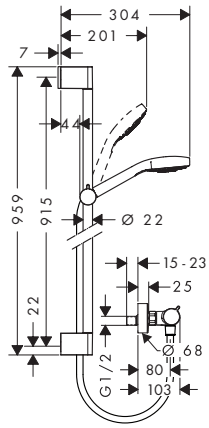

65



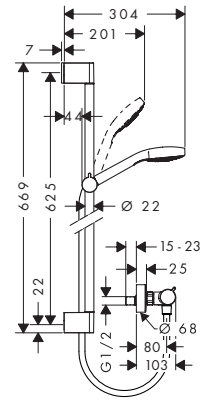

Technologies



Spray types



Overview variants

Version	Length shower bar (mm)	Shower head size	Max. flow rate at 3 bar (l/min)	Min. flow pressure (bar)	Finish	Code no.
90 Vario	959	110	14.7	1	White/Chrome	27082400
65 Vario	669	110	14.7	1	White/Chrome	27081400

Consisting of:		Included in	Code no.
	Ecostat Shower thermostat Comfort for exposed installation	27082400 27081400	13116000
	Unica Shower bar Croma 90 cm	27082400	26506000
	Unica Shower bar Croma 65 cm	27081400	26505000
	Croma Select E Hand shower 110 Vario	27082400 27081400	26812400
	Isiflex Shower hose 160 cm	27082400 27081400	28276000

Measurements within scale drawings are in mm.
Technical specifications and units of measure are subject to change.

Shower sets

Croma 100 Shower systems Multi, Vario with thermostat

Features of all variants

- consists of: hand shower, shower thermostat, shower bar, slider, soap dish, shower hose
- shower head size: 100 mm
- spray type adjustment by turning spray disc
- max. operating pressure: 6 bar
- description thermostat: Ecostat Comfort
- EcoStop button: EcoStop button limits the water consumption to 10 l/min
- protection against scalding: safety stop at 40 °C
- intrinsically safe against backflow
- profile pipe: round
- shower bar diameter: 22 mm
- wall supports made of plastic
- pivot connector prevents hose from tangling
- 90° position adjustable hand shower holder, pivots left and right, up and down

90



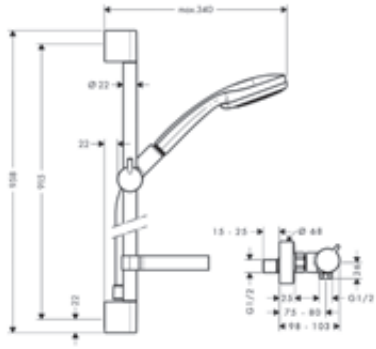

65



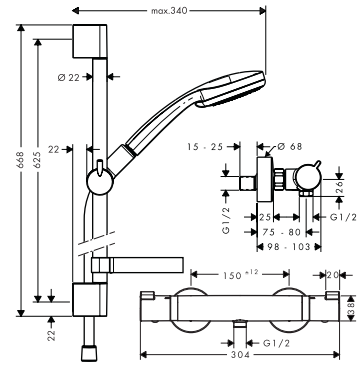

Sustainability

EcoSmart

Technologies

Quick Clean

XXL Performance

Spray types

Normal | Rain | Shampoo | Massage | Mono Rain

Overview variants

Version	Length shower bar (mm)	Shower head size	Number of sprays	Spray types	Max. flow rate at 3 bar (l/min)	Min. flow pressure (bar)	Finish	Code no.
90 Multi	990	100	3	Rain, MonoRain, Massage spray	19	1.2	Chrome	27085000
90 Vario	990	100	4	normal spray, Rain, Massage spray, Shampoo spray	9	1	Chrome	27033000
90 Vario	668	100	4	normal spray, Rain, Massage spray, Shampoo spray	18	1	Chrome	27035000
65 Multi	668	100	3	Rain, MonoRain, Massage spray	19	1	Chrome	27086000
65 Vario	668	100	4	normal spray, Rain, Massage spray, Shampoo spray	9	1	Chrome	27032000
65 Vario	668	100	4	normal spray, Rain, Massage spray, Shampoo spray	18	1	Chrome	27034000

Consisting of:		Included in	Code no.
	Ecostat Shower thermostat Comfort for exposed installation	27085000 27033000 27035000 27086000 27032000 27034000	13116000
	Unica Shower bar C 90 cm with Isiflex shower hose 160 cm	27085000 27033000	27610000
	Unica Shower bar C 65 cm with Isiflex shower hose 160 cm	27035000 27086000 27032000 27034000	27611000
	Croma 100 Hand shower Multi	27085000 27086000	28536000

Measurements within scale drawings are in mm.
Technical specifications and units of measure are subject to change.

Croma 100 Shower systems Multi, Vario with thermostat

Consisting of:		Included in	Code no.
	Croma 100 Hand shower Vario EcoSmart 9 l/min	27033000 27032000	28537000
	Croma 100 Hand shower Vario	27035000 27034000	28535000
	Casetta Soap dish C	27085000 27033000 27035000 27086000 27032000 27034000	28678000

Optional parts:		For	Finish	Code no.
	Wall bar spacer	27085XXX 27035XXX	Chrome	97450000

Crometta Shower systems Vario with thermostat

Features of all variants

- consists of: hand shower, shower thermostat, shower bar, slider, shower hose
- shower head size: 100 mm
- spray type overhead shower: Rain, IntenseRain
- spray type adjustment by turning spray disc
- maximum flow rate at 3 bar: 13,8 l/min
- minimum flow pressure: 1 bar
- description thermostat: Ecostat 1001 CL
- profile pipe: round
- shower bar diameter: 22 mm
- wall supports made of plastic
- pivot connector prevents hose from tangling
- 90° position adjustable hand shower holder, pivots left and right, up and down

90



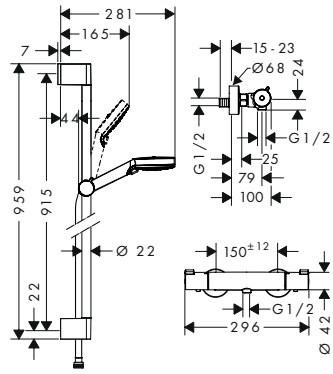

65



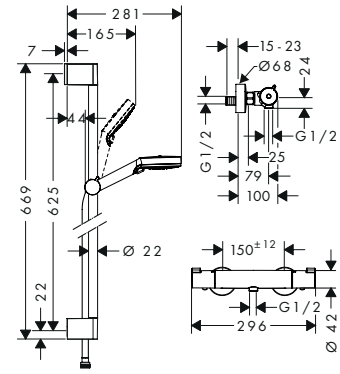

Technologies



Spray types



Overview variants

Version	Length shower bar (mm)	Shower head size	Number of sprays	Spray types	Max. flow rate at 3 bar (l/min)	Min. flow pressure (bar)	Finish	Code no.
90 Vario	959	100	2	Rain, IntenseRain	13.8	1	White/Chrome	27813400
65 Vario	669	100	2	Rain, IntenseRain	13.8	1	White/Chrome	27812400

Consisting of:		Included in	Code no.
	Ecostat Shower thermostat 1001 CL for exposed installation	27813400 27812400	13211000
	Crometta Hand shower 100 Vario	27813400 27812400	26330400
	Unica Shower bar Croma 90 cm	27813400	26506000
	Unica Shower bar Croma 65 cm	27812400	26505000

For more information about this product, please see the next page.

Measurements within scale drawings are in mm.
Technical specifications and units of measure are subject to change.

Crometta Shower systems Vario with thermostat

Consisting of:		Included in	Code no.
	Isiflex Shower hose 160 cm	27813400 27812400	28276000

Measurements within scale drawings are in mm.
Technical specifications and units of measure are subject to change.



Wall bars

Unica Shower bars E

Features of all variants

- flat aluminium profile with safety glass finish
- pivot connector prevents hose from tangling
- hose nut: for shower hoses with a conical nut
- 90° position adjustable hand shower holder, pivots left and right, up and down
- shelf made of safety glass
- surface shower bar: chrome
- bar width: 41 mm
- profile pipe: flat
- metal hand shower holder
- self-locking hand shower holder
- slider steplessly adjustable
- wall supports of plastic

150



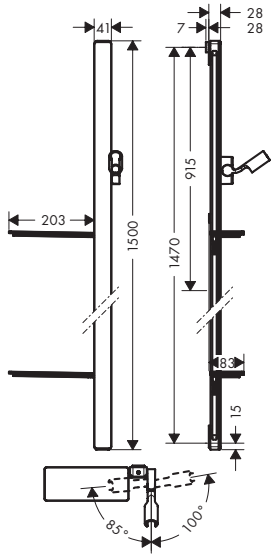

90



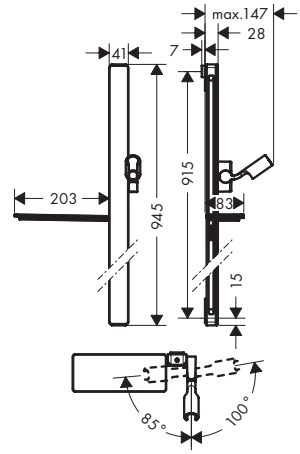

Overview variants

Version	X1 Length shower bar (mm)	X2 Drilling distance (mm)	Shower hose length (mm)	Shelf	Finish	Code no.
150	1500	1470	1600	2	Chrome	27645000
90	945	915	1600	1	Chrome	27640000
					White/Chrome	27640400

27640400 Surface shower bar: white.

Consisting of:		Included in	Code no.
	Casetta Soap dish/ shelf E	27640XXX 27645000	26511XXX
	Isiflex Shower hose 160 cm	27640XXX	28276000

Optional parts:		Finish	Code no.
	Casetta Soap dish/ shelf E	Chrome	26511000
		White/Chrome	26511400

Measurements within scale drawings are in mm.
Technical specifications and units of measure are subject to change.

Unica Shower bar Raindance 90 cm with Isiflex shower hose 160 cm

Features

- consists of: shower bar, shower hose, slider
- flat and slim aluminium profile
- pivot connector prevents hose from tangling
- pipe length: 995 mm
- bar width: 45 mm
- profile pipe: square
- drilling distance: 915 mm
- metal hand shower holder
- self-locking hand shower holder
- slider steplessly adjustable





Finish	Code no.
Chrome	27636000

Consisting of:		Included in	Code no.
	Isiflex Shower hose 160 cm	27636000	28276000

Optional parts:		Finish	Code no.
	Casetta Soap dishes Raindance	Chrome	28698000
	Raindance Corner fitting set		28694000
	Raindance Wall bar spacer	Chrome	98993000

Unica Shower bars E Puro with easy slider

Features of all variants

- consists of: shower bar, slider, shower hose
- swivelling shower bar
- pivot connector prevents hose from tangling
- profile pipe: cubic
- hand shower holder for right- and left-hand installation, metal hand shower holder
- hand shower holder with locking mechanism
- slider steplessly adjustable
- wall supports made of plastic

90



65



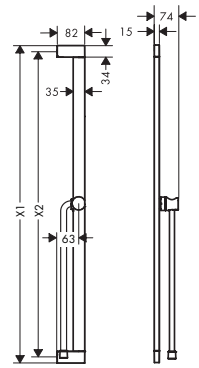

Overview variants

Version	X1 Length shower bar (mm)	X2 Drilling distance (mm)	Shower hose length (mm)	Finish	Code no.
90	950	915	1600	Chrome	24403000
				Brushed Bronze	24403140
				Matt Black	24403670
				Matt White	24403700

For more information about this product, please see the next page.

Measurements within scale drawings are in mm.
Technical specifications and units of measure are subject to change.

Unica Shower bars E Puro with easy slider

Overview variants

Version	X1 Length shower bar (mm)	X2 Drilling distance (mm)	Shower hose length (mm)	Finish	Code no.
65	663	627	1600	Chrome	24404000
				Brushed Bronze	24404140
				Matt Black	24404670
				Matt White	24404700

Unica Shower bars S Puro with easy slider

Features of all variants

- consists of: shower bar, slider, shower hose
- swivelling shower bar
- pivot connector prevents hose from tangling
- hose nut: for shower hoses with a conical nut
- profile pipe: round
- hand shower holder made of plastic/metal, hand shower holder for right- and left-hand installation
- hand shower holder with locking mechanism
- slider steplessly adjustable
- wall supports made of plastic

90



65



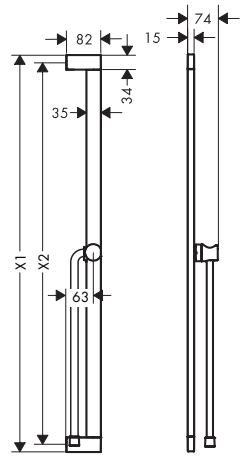

Overview variants

Version	X1 Length shower bar (mm)	X2 Drilling distance (mm)	Shower hose length (mm)	Finish	Code no.
90	950	915	1600	Chrome	24405000
				Brushed Bronze	24405140
				Matt Black	24405670
				Matt White	24405700
65	663	627	1600	Chrome	24402000
				Brushed Bronze	24402140
				Matt Black	24402670
				Matt White	24402700

Consisting of:		Included in	Code no.
	Isiflex Shower hose 160 cm	24405XXX 24402XXX	28276XXX

Measurements within scale drawings are in mm.
Technical specifications and units of measure are subject to change.

Unica Shower bars S Puro

Features of all variants

- consists of: shower bar, shower hose, slider
- pivot connector prevents hose from tangling
- shower bar diameter: 22 mm
- profile pipe: round
- metal hand shower holder
- hand shower holder with locking mechanism
- slider steplessly adjustable
- inclination angle adjustable via raster
- wall supports made of plastic

90



65



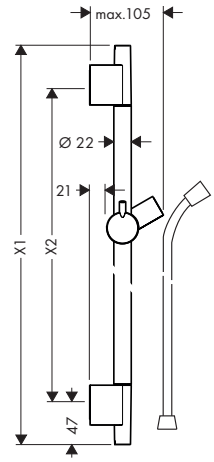

Overview variants

Version	X1 Length shower bar (mm)	X2 Drilling distance (mm)	Shower hose length (mm)	Finish	Code no.
90	1008	915	1600	Chrome	28631000
				Brushed Bronze	28631140
				Brushed Black Chrome	28631340
				Matt Black	28631670
				Matt White	28631700
				Brushed Nickel	28631820
				Polished Gold Optic	28631990
65	718	625	1600	Chrome	28632000
				Brushed Bronze	28632140
				Brushed Black Chrome	28632340
				Matt Black	28632670
				Matt White	28632700
				Polished Gold Optic	28632990

Consisting of:		Included in	Code no.
	Isiflex Shower hose 160 cm	28631XXX 28632XXX	28276XXX

Optional parts:		Finish	Code no.
	Wall bar spacer	Chrome	97450000
	Casetta Soap dish S Puro	Chrome	28679000

Measurements within scale drawings are in mm.
Technical specifications and units of measure are subject to change.

Wall bars

Unica Shower bars Pulsify S with push slider

Features of all variants

- consists of: shower bar, slider, shower hose
- pivot connector prevents hose from tangling
- hand shower holder inclination angle can be adjusted by 45°
- shower bar diameter: 22 mm
- profile pipe: round
- hand shower holder with locking mechanism
- slider steplessly adjustable
- wall supports made of plastic

90



65



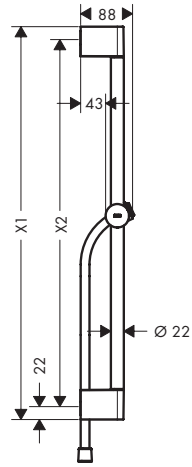

Technologies



Overview variants

Version	X1 Length shower bar (mm)	X2 Drilling distance (mm)	Shower hose length (mm)	Finish	Code no.
90	959	915	1600	Chrome	24401000
				Matt Black	24401670
				Matt White	24401700
65	669	625	1600	Chrome	24400000
				Matt Black	24400670
				Matt White	24400700

Consisting of:		Included in	Code no.
	Isiflex Shower hose 160 cm	24401XXX 24400XXX	28276XXX

Unica Shower bars Croma

Features of all variants

- consists of: shower bar, slider
- hand shower holder inclination angle can be adjusted by 45°
- shower bar diameter: 22 mm
- profile pipe: round
- hand shower holder with locking mechanism
- hand shower holder inclination angle adjustable in 2 steps
- wall supports made of plastic

90



65



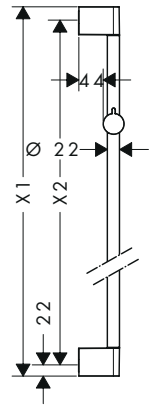

Measurements within scale drawings are in mm.
Technical specifications and units of measure are subject to change.

Unica Shower bars Croma

Overview variants

Version	X1 Length shower bar (mm)	X2 Drilling distance (mm)	Finish	Code no.
90	959	915	Chrome	26506000
65	669	625	Chrome	26505000

Optional parts:		Finish	Code no.
	Wall bar spacer	Chrome	97450000

Unica Shower bar Reno 72 cm

Features

- consists of: shower bar, slider
- pipe length: 720 mm
- shower bar diameter: 22 mm
- profile pipe: round
- variable drilling hole distance: 400 - 670 mm
- variable wall support
- hand shower holder with locking mechanism
- hand shower holder inclination angle adjustable in 2 steps
- wall supports made of plastic



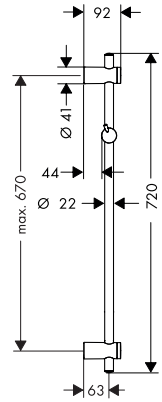

Finish	Code no.
Chrome	27704000

Unica Shower bars C

Features of all variants

- consists of: shower bar, shower hose, slider
- pivot connector prevents hose from tangling
- shower bar diameter: 22 mm
- profile pipe: round
- translucent plastic shower slide
- hand shower holder with locking mechanism
- slider steplessly adjustable
- inclination angle adjustable via raster
- wall supports made of plastic

90



65



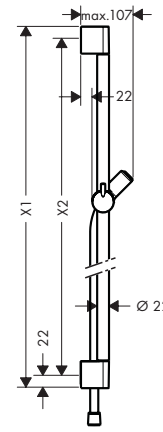

Overview variants

X1 Length shower bar (mm)	X2 Drilling distance (mm)	Shower hose length (mm)	Finish	Code no.
959	915	1600	Chrome	27610000
668	625	1600	Chrome	27611000

For more information about this product, please see the next page.

Measurements within scale drawings are in mm.
Technical specifications and units of measure are subject to change.

Wall bars

Unica Shower bars C

Consisting of:		Included in	Code no.
	Isiflex Shower hose 160 cm	27610000 27611000	28276000

Optional parts:		Finish	Code no.
	Wall bar spacer	Chrome	97450000
	Casetta Soap dish C	Chrome	28678000

Unica Shower bar Crometta 65 cm with Metaflex shower hose 160 cm

Features

- consists of: shower bar, shower hose, slider
- pipe length: 669 mm
- shower bar diameter: 22 mm
- profile pipe: round
- drilling distance: 625 mm
- translucent plastic shower slide
- hand shower holder with locking mechanism
- hand shower holder inclination angle adjustable in 2 steps
- wall supports made of plastic



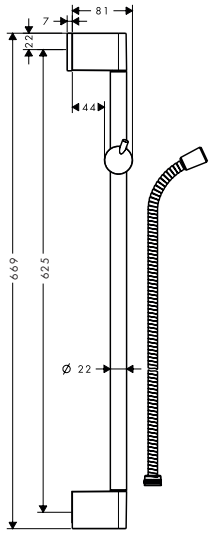

Finish	Code no.
Chrome	27615000

Consisting of:		Included in	Code no.
	Metaflex Shower hose 160 cm	27615000	28266000

Optional parts:		Finish	Code no.
	Casetta Soap dish C	Chrome	28678000
	Wall bar spacer	Chrome	97450000

Measurements within scale drawings are in mm.
Technical specifications and units of measure are subject to change.

Unica Shower bars Varia

Features of all variants

- consists of: shower bar, slider
- shower bar diameter: 22 mm
- profile pipe: round
- variable wall support
- hand shower holder inclination angle adjustable in 2 steps
- wall supports made of plastic

105



72



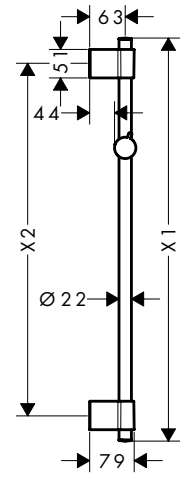

Overview variants

Version	X1 Length shower bar (mm)	X2 Drilling distance (mm)	Finish	Code no.
105	1044	max. 990 mm	Chrome	27356000
72	714	660	Chrome	27355000

Casetta Soap dish/ shelf E

Features

- with mounting material
- length 200 mm
- surface shelf: chrome



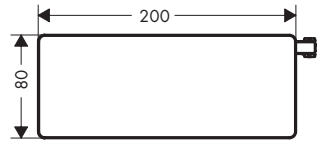

Finish	Code no.
Chrome	26511000
White/Chrome	26511400
Black/Chrome	26511600

26511400	Surface shelf: white.
26511600	Surface shelf: black.

Measurements within scale drawings are in mm.
Technical specifications and units of measure are subject to change.

Casetta Soap dish C

Features

- swivelling
- with mounting material
- height-adjustable
- for shower bars with Ø 22 mm



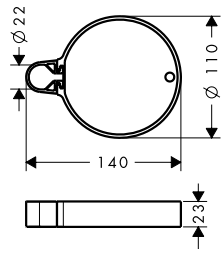

Finish	Code no.
Chrome	28678000

Casetta Soap dish E

Features

- with mounting material
- height-adjustable
- for shower bars with Ø 18 / 22 / 25 mm



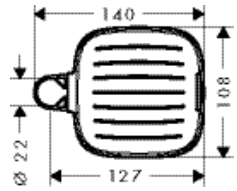

Finish	Code no.
Chrome	26519000

Casetta Soap dish S Puro

Features

- swivelling
- height-adjustable
- for shower bars with Ø 22 mm



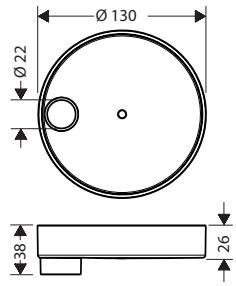

Finish	Code no.
Chrome	28679000

Measurements within scale drawings are in mm.
Technical specifications and units of measure are subject to change.



Shower holder sets

Shower holder sets

Rainfinity Shower holder sets 3jet

Features of all variants

- consists of: hand shower, shower holder, shower hose
- shower head size: 130 mm
- integrated support function
- spray type: PowderRain, Intense PowderRain, MonoRain
- convenient spray selection via Select button
- maximum flow rate at 3 bar: 14 l/min
- minimum flow pressure: 1 bar
- operating pressure: min. 1 bar/max. 6 bar
- pivot connector prevents hose from tangling
- shower hose with conical nut on both ends
- wall supports of metal
- wall mounting: screw fastening
- rinseable screen seal



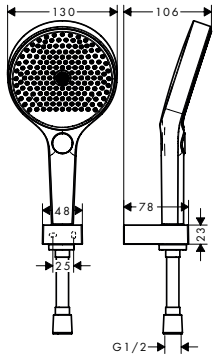

Technologies



Spray types



Overview variants

Shower head size	Shower hose length (mm)	Number of sprays	Spray types	Max. flow rate at 3 bar (l/min)	Min. flow pressure (bar)	Select	Finish	Code no.
130	1600	3	PowderRain, Intense PowderRain, MonoRain	14	1	■	Chrome	26851000
							Matt White	26851700
130	1250	3	PowderRain, Intense PowderRain, MonoRain	14	1	■	Chrome	26852000
							Matt White	26852700

Consisting of:		Included in	Code no.
	Rainfinity Hand shower 130 3jet	26851XXX 26852XXX	26864XXX
	Shower holder Porter E	26851XXX 26852XXX	28387XXX
	Isiflex Shower hose 160 cm	26851XXX	28276XXX
	Isiflex Shower hose 125 cm	26852XXX	28272XXX

Rainfinity Shower holder sets 1jet

Features of all variants

- consists of: baton hand shower, shower holder, shower hose
- shower head size: 100 x 38 mm
- integrated support function
- spray type: PowderRain
- maximum flow rate at 3 bar: 13,8 l/min
- minimum flow pressure: 1 bar
- operating pressure: min. 1 bar/max. 6 bar
- pivot connector prevents hose from tangling
- shower hose with conical nut on both ends
- wall supports of metal
- wall mounting: screw fastening
- rinseable screen seal



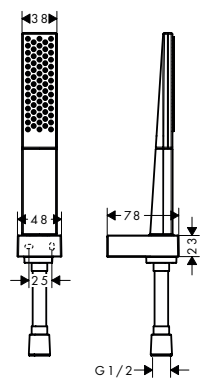

Technologies



Spray types



Measurements within scale drawings are in mm.
Technical specifications and units of measure are subject to change.

Rainfinity Shower holder sets 1jet

Overview variants

Shower head size	Shower hose length (mm)	Number of sprays	Spray types	Max. flow rate at 3 bar (l/min)	Min. flow pressure (bar)	Finish	Code no.
100	1600	1	PowderRain	13.8	1	Chrome	26856000
						Matt White	26856700
100	1250	1	PowderRain	13.8	1	Chrome	26857000
						Matt White	26857700

Consisting of:		Included in	Code no.
	Rainfinity Baton hand shower 100 1jet	26856XXX 26857XXX	26866XXX
	Shower holder Porter E	26856XXX 26857XXX	28387XXX
	Isiflex Shower hose 160 cm	26856XXX	28276XXX
	Isiflex Shower hose 125 cm	26857XXX	28272XXX

Raindance Select S Shower holder sets 3jet

Features of all variants

- consists of: hand shower, shower holder, shower hose
- shower head size: 125 mm
- integrated support function
- convenient spray selection via Select button
- minimum flow pressure: 1 bar
- operating pressure: min. 1 bar/max. 6 bar
- pivot connector prevents hose from tangling
- shower holder made of plastic
- wall mounting: screw fastening
- rinseable screen seal



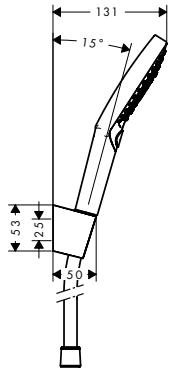

Technologies



Spray types



Overview variants

Shower head size	Shower hose length (mm)	Number of sprays	Spray types	Max. flow rate at 3 bar (l/min)	Min. flow pressure (bar)	Finish	Code no.
120	1600	3	PowderRain, Rain, Whirl	11	1	Chrome	27668000
120	1600	3	RainAir, Rain, Whirl	15	1	Chrome	26721000
						White/Chrome	26721400
120	1250	3	RainAir, Rain, Whirl	15	1	Chrome	26701000
120	1250	3	PowderRain, Rain, Whirl	11	1	Chrome	27669000

Consisting of:		Included in	Code no.
	Raindance Select S Hand shower 120 3jet PowderRain	27668000 27669000	26014000
	Raindance Select S Hand shower 120 3jet	26721XXX 26701000	26530XXX

For more information about this product, please see the next page.

Measurements within scale drawings are in mm.
Technical specifications and units of measure are subject to change.

Shower holder sets

Raindance Select S Shower holder sets 3jet

Consisting of:		Included in	Code no.
	Shower holder Porter S	27668000 26721XXX 26701000 27669000	28331000
	Isiflex Shower hose 160 cm	27668000 26721XXX	28276000
	Isiflex Shower hose 125 cm	26701000 27669000	28272000

Raindance Select E Shower holder sets 3jet

Features of all variants

- consists of: hand shower, shower holder, shower hose
- shower head size: 120 mm
- integrated support function
- spray type: RainAir, Rain, Whirl
- convenient spray selection via Select button
- maximum flow rate at 3 bar: 14,4 l/min
- minimum flow pressure: 1 bar
- operating pressure: min. 1 bar/max. 6 bar
- pivot connector prevents hose from tangling
- shower holder made of plastic
- wall mounting: screw fastening
- rinseable screen seal



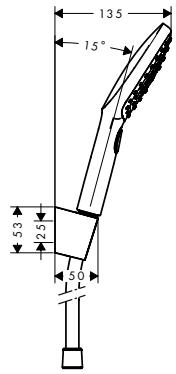

Technologies



Spray types



Overview variants

Shower head size	Shower hose length (mm)	Number of sprays	Spray types	Max. flow rate at 3 bar (l/min)	Min. flow pressure (bar)	Finish	Code no.
120	1600	3	RainAir, Rain, Whirl	14.4	1	Chrome	26720000
						White/Chrome	26720400
120	1250	3	RainAir, Rain, Whirl	14.4	1	Chrome	26700000

Consisting of:		Included in	Code no.
	Raindance Select E Hand shower 120 3jet	26720XXX 26700000	26520XXX
	Shower holder Porter S	26720XXX 26700000	28331000
	Isiflex Shower hose 160 cm	26720XXX	28276000
	Isiflex Shower hose 125 cm	26700000	28272000

Measurements within scale drawings are in mm.
Technical specifications and units of measure are subject to change.

Pulsify Select S / Pulsify S Shower holder sets 3jet, 1jet

Features of all variants

- consists of: hand shower, shower holder, shower hose
- shower head size: 105 mm
- integrated support function
- minimum flow pressure: 1 bar
- operating pressure: min. 1 bar/max. 6 bar
- pivot connector prevents hose from tangling
- wall supports made of plastic
- rinseable sieve insert

Relaxation



1jet



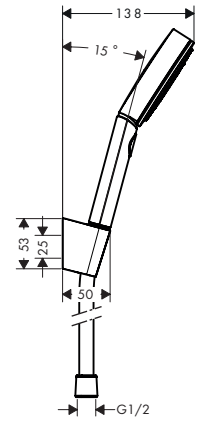

Technologies

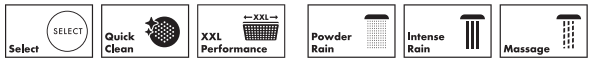

Spray types

Overview variants

Shower head size	Shower hose length (mm)	Shower effect	Number of sprays	Spray types	Max. flow rate at 3 bar (l/min)	Min. flow pressure (bar)	Finish	Code no.
105	1600	Relaxation	3	PowderRain, IntenseRain, Massage spray	11.4	1	Chrome	24303000
							Matt Black	24303670
							Matt White	24303700
105	1250	Relaxation	3	PowderRain, IntenseRain, Massage spray	11.4	1	Chrome	24302000
							Matt Black	24302670
							Matt White	24302700
105	1250	1jet	1	PowderRain	13.5	1	Chrome	24301000
							Matt Black	24301670
							Matt White	24301700

Consisting of:		Included in	Code no.
	Pulsify Select S Hand shower 105 3jet Relaxation	24303XXX 24302XXX	24110XXX
	Pulsify S Hand shower 105 1jet	24301XXX	24120XXX
	Isiflex Shower hose 160 cm	24303XXX	28276XXX
	Isiflex Shower hose 125 cm	24302XXX 24301XXX	28272XXX
	Shower holder Porter S	24303XXX 24302XXX 24301XXX	28331XXX

Measurements within scale drawings are in mm.
Technical specifications and units of measure are subject to change.

Shower holder sets

Pulsify S Shower holder set 105 1jet with shower hose 125 cm

Features

- consists of: hand shower, shower holder, shower hose
- shower head size: 105 mm
- integrated support function
- spray type: PowderRain
- maximum flow rate at 3 bar: 13,5 l/min
- minimum flow pressure: 1 bar
- operating pressure: min. 1 bar/max. 6 bar
- pivot connector prevents hose from tangling
- wall supports made of plastic
- rinseable sieve insert



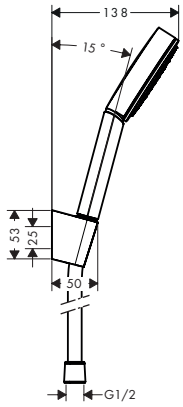

Technologies



Spray types



Finish	Code no.
Chrome	24301000
Matt Black	24301670
Matt White	24301700

Consisting of:		Included in	Code no.
	Pulsify S Hand shower 105 1jet	24301XXX	24120XXX
	Isiflex Shower hose 125 cm	24301XXX	28272XXX
	Shower holder Porter S	24301XXX	28331XXX

Croma Select S Shower holder sets Vario, 1jet

Features of all variants

- consists of: hand shower, shower holder, shower hose
- shower head size: 110 mm
- integrated support function
- minimum flow pressure: 1 bar
- pivot connector prevents hose from tangling
- shower hose with conical nut on both ends
- shower holder made of plastic
- wall mounting: screw fastening
- rinseable screen seal

Vario



1jet



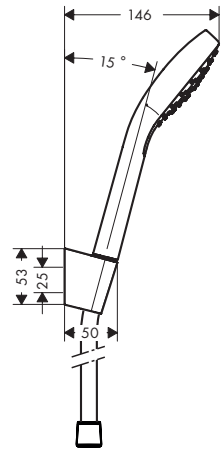

Technologies



Spray types



Overview variants

Version	Shower head size	Shower hose length (mm)	Spray types	Max. flow rate at 3 bar (l/min)	Min. flow pressure (bar)	Select	Finish	Code no.
Vario	110	1600	Rain, IntenseRain, TurboRain	14.7	1	■	White/Chrome	26411400

Measurements within scale drawings are in mm.
Technical specifications and units of measure are subject to change.

Croma Select S Shower holder sets Vario, 1jet

Overview variants

Version	Shower head size	Shower hose length (mm)	Spray types	Max. flow rate at 3 bar (l/min)	Min. flow pressure (bar)	Select	Finish	Code no.
Vario	110	1250	Rain, IntenseRain, TurboRain	14.7	1	■	White/Chrome	26421400
1jet	110	1600	Rain	16	1	–	White/Chrome	26410400
1jet	110	1250	Rain	16	1	–	White/Chrome	26420400

Consisting of:		Included in	Code no.
	Croma Select S Hand shower 110 Vario	26411400 26421400	26802400
	Croma S Hand shower 110 1jet	26410400 26420400	26804400
	Shower holder Porter S	26411400 26421400 26410400 26420400	28331000
	Isiflex Shower hose 160 cm	26411400 26410400	28276000
	Isiflex Shower hose 125 cm	26421400 26420400	28272000

Croma Select E Shower holder sets Vario, 1jet

Features of all variants

- consists of: hand shower, shower holder, shower hose
- shower head size: 110 mm
- integrated support function
- minimum flow pressure: 1 bar
- pivot connector prevents hose from tangling
- shower hose with conical nut on both ends
- shower holder made of plastic
- wall mounting: screw fastening
- rinseable screen seal

Vario



1jet



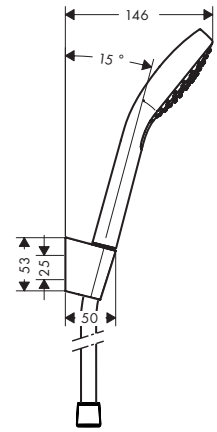

Technologies



Spray types



Overview variants

Version	Shower head size	Shower hose length (mm)	Spray types	Max. flow rate at 3 bar (l/min)	Min. flow pressure (bar)	Select	Finish	Code no.
Vario	110	1600	Rain, IntenseRain, TurboRain	14.7	1	■	White/Chrome	26413400
Vario	110	1250	Rain, IntenseRain, TurboRain	14.7	1	■	White/Chrome	26425400
1jet	110	1600	Rain	16	1	–	White/Chrome	26412400
1jet	110	1250	Rain	16	1	–	White/Chrome	26424400

For more information about this product, please see the next page.

Measurements within scale drawings are in mm.
Technical specifications and units of measure are subject to change.

Shower holder sets

Croma Select E Shower holder sets Vario, 1jet

Consisting of:		Included in	Code no.
	Croma Select E Hand shower 110 Vario	26413400 26425400	26812400
	Croma E Hand shower 110 1jet	26412400 26424400	26814400
	Shower holder Porter S	26413400 26425400 26412400 26424400	28331000
	Isiflex Shower hose 160 cm	26413400 26412400	28276000
	Isiflex Shower hose 125 cm	26425400 26424400	28272000

Croma 100 Shower holder sets Multi, Vario, 1jet

Features of all variants

- consists of: hand shower, shower holder, shower hose
- shower head size: 100 mm
- integrated support function
- minimum flow pressure: 1 bar
- operating pressure: min. 1 bar/max. 6 bar
- pivot connector prevents hose from tangling
- shower hose with conical nut on both ends
- shower holder made of plastic
- wall mounting: screw fastening
- rinseable screen seal

Vario



1jet



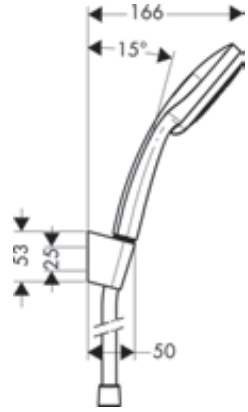

Technologies



Spray types

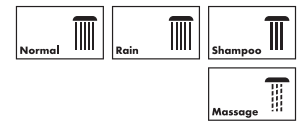

Overview variants

Version	Shower head size	Shower hose length (mm)	Number of sprays	Spray types	Max. flow rate at 3 bar (l/min)	Min. flow pressure (bar)	Finish	Code no.
Vario	100	1600	4	Rain, normal spray, Shampoo spray, Massage spray	18	1	Chrome	27594000
Vario	100	1250	4	Rain, normal spray, Shampoo spray, Massage spray	18	1	Chrome	27592000
1jet	100	1250	1	Rain	16	1	Chrome	27574000

Consisting of:		Included in	Code no.
	Croma 100 Hand shower Vario	27594000 27592000	28535000
	Croma 100 Hand shower 1jet	27574000	28580000
	Shower holder Porter S	27594000 27592000 27574000	28331000
	Isiflex Shower hose 160 cm	27594000	28276000
	Isiflex Shower hose 125 cm	27592000 27574000	28272000

Measurements within scale drawings are in mm.
Technical specifications and units of measure are subject to change.

Crometta Shower holder sets Vario, 1jet

Features of all variants

- consists of: hand shower, shower holder, shower hose
- shower head size: 100 mm
- integrated support function
- minimum flow pressure: 1 bar
- pivot connector prevents hose from tangling
- shower holder made of plastic
- wall mounting: screw fastening
- rinseable screen seal

Vario



1jet



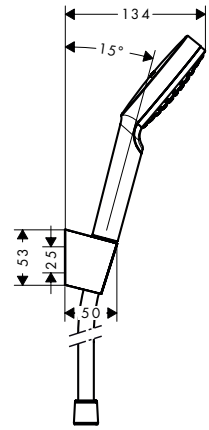

Sustainability

EcoSmart

Technologies

Quick Clean

XXL Performance

Spray types

Rain

Intense Rain

Overview variants

	Version	Shower head size	Shower hose length (mm)	Number of sprays	Spray types	Max. flow rate at 3 bar (l/min)	Min. flow pressure (bar)	Finish	Code no.
●	Vario	100	1600	2	Rain, IntenseRain	9	1	White/Chrome	26694400
	Vario	100	1600	2	Rain, IntenseRain	13.8	1	White/Chrome	26692400
●	Vario	100	1250	2	Rain, IntenseRain	9	1	White/Chrome	26693400
	Vario	100	1250	2	Rain, IntenseRain	13.8	1	White/Chrome	26691400
●	1jet	100	1600	1	Rain	9	1	White/Chrome	26569400
	1jet	100	1600	1	Rain	14	1	White/Chrome	26567400
●	1jet	100	1250	1	Rain	9	1	White/Chrome	26568400
	1jet	100	1250	1	Rain	14	1	White/Chrome	26690400

Consisting of:		Included in	Code no.
	Crometta Hand shower 100 Vario EcoSmart 9 l/min	26694400 26693400	26332400
	Crometta Hand shower 100 Vario	26692400 26691400	26330400
	Crometta Hand shower 100 1jet EcoSmart 9 l/min	26569400 26568400	26333400
	Crometta Hand shower 100 1jet	26567400 26690400	26331400
	Shower holder Porter S	26694400 26692400 26693400 26691400 26569400 26567400 26568400 26690400	28331000
	Isiflex Shower hose 160 cm	26694400 26692400 26569400 26567400	28276000
	Isiflex Shower hose 125 cm	26693400 26691400 26568400 26690400	28272000

Measurements within scale drawings are in mm.
Technical specifications and units of measure are subject to change.

Shower holder sets

Crometta 85 Shower holder sets Vario, 1jet

Features of all variants

- consists of: hand shower, shower holder, shower hose
- shower head size: 85 mm
- integrated support function
- minimum flow pressure: 1 bar
- operating pressure: min. 1 bar/max. 6 bar
- wall mounting: screw fastening
- rinseable screen seal

Vario



1jet



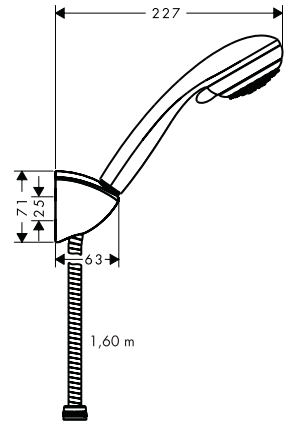

Technologies

Quick Clean

Spray types

Normal

Overview variants

Version	Shower head size	Shower hose length (mm)	Number of sprays	Spray types	Max. flow rate at 3 bar (l/min)	Min. flow pressure (bar)	Finish	Code no.
Vario	85	1600	2	Vario spray, normal spray	17	1	Chrome	27559000
1jet	85	1600	1	normal spray	16	1	Chrome	27577000
1jet	85	1250	1	normal spray	16	1	Chrome	27576000

Consisting of:		Included in	Code no.
	Crometta 85 Hand shower Vario	27559000	28562000
	Crometta 85 Hand shower Mono	27577000 27576000	28585000
	Shower holder Porter C	27559000 27577000 27576000	27521000
	Metaflex Shower hose 160 cm	27559000 27577000	28266000
	Metaflex Shower hose 125 cm	27576000	28262000

Vernis Blend Shower holder sets Vario

Features of all variants

- consists of: hand shower, shower holder, shower hose
- shower head size: 100 mm
- integrated support function
- spray type: Rain, IntenseRain
- spray type adjustment by turning spray disc
- operating pressure: min. 1 bar/max. 6 bar
- shower hose with conical nut on both ends
- shower holder made of plastic
- wall mounting: screw fastening
- rinseable screen seal



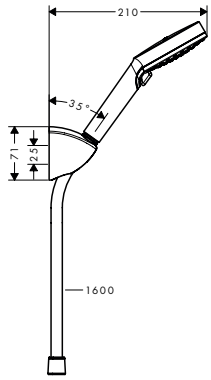

Sustainability

EcoSmart

Technologies

Quick Clean

XXL Performance

Spray types

Rain

Intense Rain

Measurements within scale drawings are in mm.
Technical specifications and units of measure are subject to change.

Vernis Blend Shower holder sets Vario

Overview variants

Shower head size	Shower hose length (mm)	Number of sprays	Spray types	Max. flow rate at 3 bar (l/min)	Min. flow pressure (bar)	Finish	Code no.
100	1600	2	Rain, IntenseRain	9.7	1	Chrome	26278000
100	1600	2	Rain, IntenseRain	15.2	0.8	Chrome	26273000
100	1600	2	Rain, IntenseRain	10.5	1	Chrome	26273007

Consisting of:		Included in	Code no.
	Vernis Blend Hand shower 100 Vario EcoSmart	26278000	26340000
	Vernis Blend Hand shower 100 Vario	26273CHN 26273XXX	26270XXX
	Shower holder Porter C	26278000 26273000	27521000
	Metaflex Shower hose 160 cm	26278000 26273000	28266000



Shower holders

Shower holders

Shower holder Porter E

Features

· fixed holding position
· material: metal



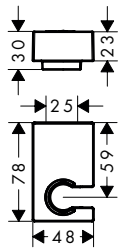

Finish	Code no.
Chrome	28387000
Brushed Bronze	28387140
Brushed Black Chrome	28387340
Matt Black	28387670
Matt White	28387700
Polished Gold Optic	28387990

Shower holder Porter C

Features

· fixed holding position
· material: plastic



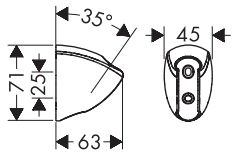

Finish	Code no.
Chrome	27521000

Shower holder Porter S

Features

· fixed holding position
· for hose with conical nut
· material: plastic



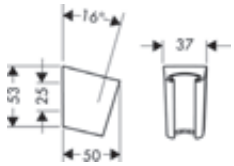

Finish	Code no.
Chrome	28331000
Brushed Bronze	28331140
Brushed Black Chrome	28331340
Matt Black	28331670
Matt White	28331700
Stainless Steel Optic	28331800
Polished Gold Optic	28331990

Measurements within scale drawings are in mm.
Technical specifications and units of measure are subject to change.

Shower holder

Features

· fixed holding position
· for hose with conical nut
· material: plastic



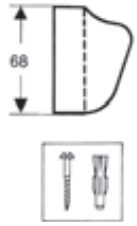

Finish	Code no.
Chrome	28321000

Shower holder Porter Vario

Features

· shower holder inclination angle can be adjusted continously
· material: metal



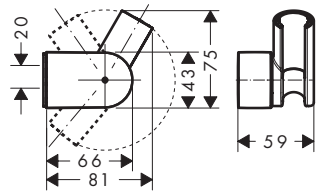

Finish	Code no.
Chrome	28328000

Shower holder Porter classic

Features

· fixed holding position
· for hose with conical nut
· material: plastic



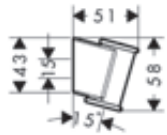

Finish	Code no.
Chrome	28324000

Measurements within scale drawings are in mm.
Technical specifications and units of measure are subject to change.

Shower holders

Rainfinity Wall outlets with shower holder

Features of all variants

- 500 mm storage shelf
- integrated support function
- metal connection angle
- non-return valve
- connection type: G ½
- for shower hoses with a conical nut
- shelf made of safety glass
- surface shelf: graphite

shower holder right



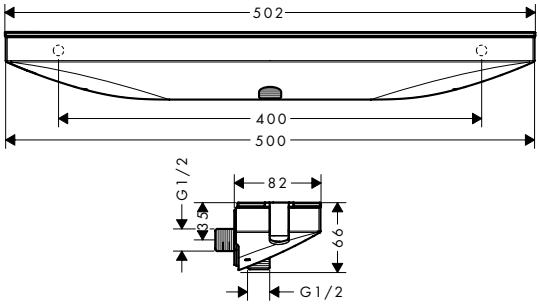

shower holder left



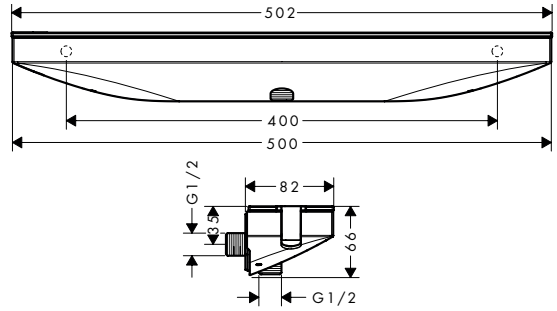

Overview variants

Shower holder	Shape	Non-return valve	Finish	Code no.
right	square	with non-return valve	Chrome	26858000
			Brushed Bronze	26858140
			Brushed Black Chrome	26858340
			Matt Black	26858670
			Matt White	26858700
			Polished Gold Optic	26858990
left	square	with non-return valve	Chrome	26843000
			Brushed Bronze	26843140
			Brushed Black Chrome	26843340
			Matt Black	26843670
			Matt White	26843700
			Polished Gold Optic	26843990

26843000
26858000 Surface shelf: mirror glass.

Measurements within scale drawings are in mm.
Technical specifications and units of measure are subject to change.

FixFit Wall outlet Porter 300 with shower holder and shower shelf

Features

- 300 mm storage shelf
- integrated support function on both sides
- metal connection angle
- non-return valve
- connection type: G ½
- flexible positioning, adjustment to left or right by 77.5 mm
- for shower hoses with a conical nut
- safety glass in white and chrom



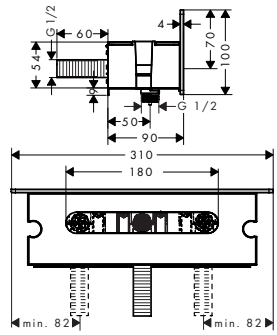

Finish	Code no.
Chrome	26456000
White/Chrome	26456400

FixFit S / FixFit E / FixFit Q Wall outlets with shower holder

Features of all variants

- consists of: wall connector, escutcheon
- version: plastic housing with internal water supply made of plastic
- fixed holding position
- for all Hansgrohe hand showers
- material: plastic
- with non-return valve
- connection type: G ½

round



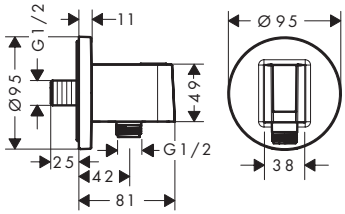

square



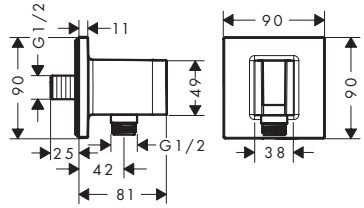

softsquare



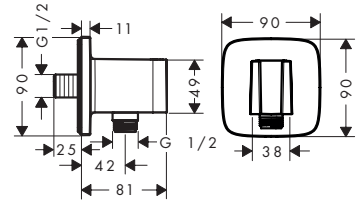

Overview variants

Shape	Non-return valve	Finish	Code no.
round	■	Chrome	26888000
		Brushed Bronze	26888140
		Brushed Black Chrome	26888340
		Matt Black	26888670
		Matt White	26888700
		Polished Gold Optic	26888990
square	■	Chrome	26889000
		Brushed Bronze	26889140
		Brushed Black Chrome	26889340
		Matt Black	26889670
		Matt White	26889700
		Polished Gold Optic	26889990

For more information about this product, please see the next page.

Measurements within scale drawings are in mm.
Technical specifications and units of measure are subject to change.

Shower holders

FixFit S / FixFit E / FixFit Q Wall outlets with shower holder

Overview variants

Shape	Non-return valve	Finish	Code no.
softsquare	■	Chrome	26887000
		Brushed Bronze	26887140
		Brushed Black Chrome	26887340
		Matt Black	26887670
		Matt White	26887700
		Polished Gold Optic	26887990

FixFit Wall outlets

Features of all variants

- connection type: G ½
- for shower hoses with conical or cylindrical nut on both sides
- material cover: plastic

without pivot joint



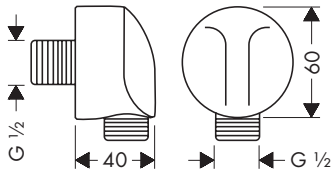

with pivot joint



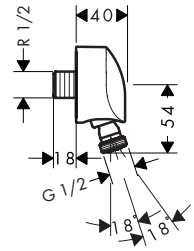

Overview variants

Ball-joint	Shape	Non-return valve	Finish	Code no.
without pivot joint	round		Chrome	27454000
			Brushed Bronze	27454140
			Brushed Black Chrome	27454340
			Matt Black	27454670
			Matt White	27454700
			Polished Gold Optic	27454990
without pivot joint	round	non-return valve	Chrome	27458000
with pivot joint	round	non-return valve	Chrome	27505000

Measurements within scale drawings are in mm.
Technical specifications and units of measure are subject to change.

FixFit Wall outlets

Features of all variants

- non-return valve
- connection type: G ½
- material cover: plastic

with pivot joint



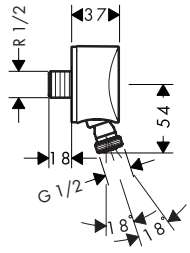

with synthetic connection angle





Overview variants

Special	Shape	Non-return valve	Finish	Code no.
with synthetic connection angle	round	non-return valve	Chrome	26453000
			Brushed Bronze	26453140
			Brushed Black Chrome	26453340
			Matt Black	26453670
			Matt White	26453700
			Polished Gold Optic	26453990
with pivot joint and plastic connection bracket	round	non-return valve	Chrome	27506000

FixFit Wall outlet Square with non-return valve

Features

- plastic connection angle
- non-return valve
- connection type: G ½
- material cover: plastic



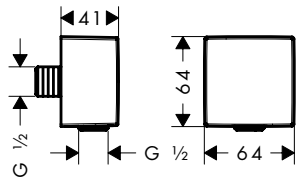

Finish	Code no.
Chrome	26455000
Brushed Bronze	26455140
Brushed Black Chrome	26455340
Matt Black	26455670
Matt White	26455700
Polished Gold Optic	26455990

Shower holders

FixFit Wall outlets with non-return valve

Features of all variants

- plastic connection angle
- non-return valve
- connection type: G ½
- material cover: plastic

with pivot joint



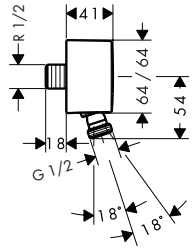

without pivot joint



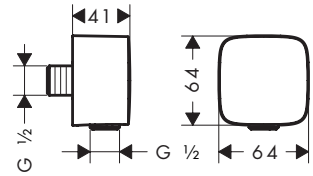

Overview variants

Special	Shape	Non-return valve	Finish	Code no.
with pivot joint	softsquare	non-return valve	Chrome	27414000
without pivot joint	softsquare	non-return valve	Chrome	26457000
			Brushed Bronze	26457140
			Brushed Black Chrome	26457340
			Matt Black	26457670
			Matt White	26457700
			Polished Gold Optic	26457990

Thread connection

Features

- reduction from DN20 to DN15



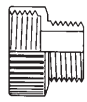

Finish	Code no.
Chrome	02024000

Measurements within scale drawings are in mm.
Technical specifications and units of measure are subject to change.



Shower hoses

Shower hoses

Designflex Textile shower hoses

Features of all variants

- high-quality textile hose with braiding
- pivot connector prevents hose from tangling
- kink-protected
- water-resistant and water-repellant material
- yarns are made of recycled PET
- unique design with multi-colored braided yarns
- warm, cotton-like material feels great to the skin
- dishwasher proof up to 60 °C
- nuts shower hose: 1x conical nut, 1x cylindrical nut
- connection thread: G ½

200/160/125



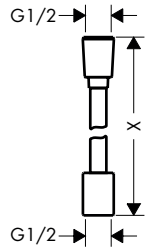

Overview variants

	Length (cm)	Finish	Code no.
	200	Chrome	28230000
		Brushed Bronze	28230140
		Brushed Black Chrome	28230340
		Matt Black	28230670
		Matt White	28230700
		Brushed Nickel	28230820
		Polished Gold Optic	28230990
	160	Chrome	28260000
		Brushed Bronze	28260140
		Brushed Black Chrome	28260340
		Matt Black	28260670
		Matt White	28260700
		Brushed Nickel	28260820
		Polished Gold Optic	28260990
	125	Chrome	28220000
		Brushed Bronze	28220140
		Brushed Black Chrome	28220340
		Matt Black	28220670
		Matt White	28220700

Measurements within scale drawings are in mm.
Technical specifications and units of measure are subject to change.

Designflex Planet Edition Textile shower hoses

Features of all variants

- high-quality textile hose with braiding
- pivot connector prevents hose from tangling
- kink-protected
- water-resistant and water-repellant material
- yarns are made of recycled PET
- unique design with multi-colored braided yarns
- warm, cotton-like material feels great to the skin
- dishwasher proof up to 60 °C
- nuts shower hose: 1x conical nut, 1x cylindrical nut
- connection thread: G ½

160/125



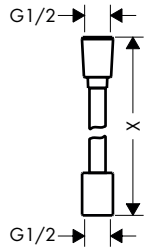

Overview variants

Length (cm)	Finish	Code no.
160	Sand (recycled)	28250210
125	Sand (recycled)	28221210

Sensoflex Metal shower hoses

Features of all variants

- metal shower hose
- with plastic coating, easy to clean
- pivot connector prevents hose from tangling
- kink-protected
- nuts shower hose: conical nut on both ends
- connection thread: G ½

200/160/125



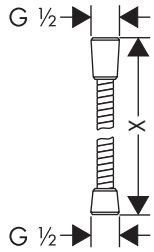

Certificates/declarations

EPD

Overview variants

Length (cm)	Finish	Code no.
200	Chrome	28134000
160	Chrome	28136000
125	Chrome	28132000

Shower hoses

Isiflex Shower hoses

Features of all variants

- with plastic coating, easy to clean
- pivot connector prevents hose from tangling
- kink-protected
- nuts shower hose: conical nut on both ends
- connection thread: G ½

200/160/125



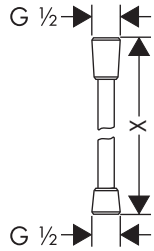

Certificates/declarations

EPD

Overview variants

Length (cm)	Volume control	Finish	Code no.
200	–	Chrome	28274000
160	–	Chrome	28276000
		Chrome/Gold Optic	28276090
		Brushed Bronze	28276140
		Brushed Gold Optic	28276250
		Polished Red Gold	28276300
		Brushed Black Chrome	28276340
		White	28276450
		Matt Black	28276670
		Matt White	28276700
		Stainless Steel Optic	28276800
		Brushed Nickel	28276820
		Fine Brass	28276840
		Brushed Brass	28276950
		Polished Gold Optic	28276990
160	■	Chrome	28248000
125	–	Chrome	28272000
		Brushed Bronze	28272140
		Brushed Red Gold	28272310
		Brushed Black Chrome	28272340
		White	28272450
		Matt Black	28272670
		Matt White	28272700
		Stainless Steel Optic	28272800
		Brushed Nickel	28272820
		Polished Gold Optic	28272990
125	■	Chrome	28249000

Measurements within scale drawings are in mm.
Technical specifications and units of measure are subject to change.

Comfortflex Shower hoses

Features of all variants

- high-quality shower hose with metal effect
- with plastic coating, easy to clean
- pivot connector prevents hose from tangling
- kink-protected
- connection thread: G ½

200/160/125



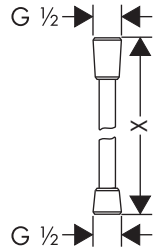

Certificates/declarations

EPD

Overview variants

	Length (cm)	Finish	Code no.
	160	Chrome	28168000
	125	Chrome	28167000

Metaflex Shower hoses

Features of all variants

- plastic shower hose with coil winding
- with plastic coating, easy to clean
- without pivot joints
- kink-protected
- connection thread: G ½

200/160/125



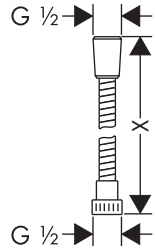

Certificates/declarations

EPD

Overview variants

	Length (cm)	Finish	Code no.
	160	Chrome	28266000
	125	Chrome	28262000

Measurements within scale drawings are in mm.
Technical specifications and units of measure are subject to change.

Shower hoses

Hose duct

Features

· material: transparent plastic



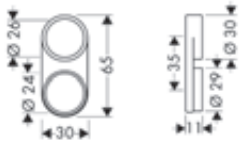

Finish	Code no.
Transparent	28072000

Thread connection

Features

· reduction from DN20 to DN15





Finish	Code no.
Chrome	02024000

Measurements within scale drawings are in mm.
Technical specifications and units of measure are subject to change.



Overhead showers

Overhead showers

Rainfinity Overhead showers 3jet with wall connector

Features of all variants

- consists of: overhead shower, wall connector
- spray type: PowderRain, Intense PowderRain, RainStream
- frame: metal
- material spray disc: aluminium
- spray disc surface: graphite
- shower head vertically inclinable by 10-30°
- the 3 spray zones must be controlled via 3 valves or a diverter valve with 3 outlets
- overhead shower removable for cleaning
- installation: wall-mounted - based on iBox
- not suitable for continuous flow water heaters

360



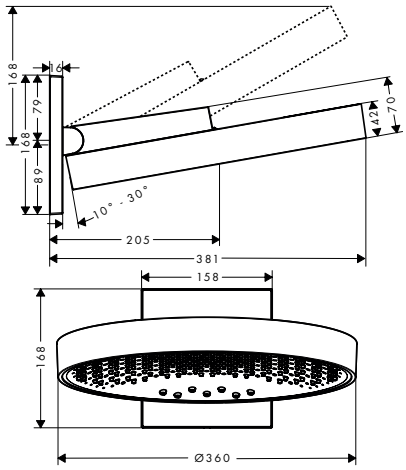

250



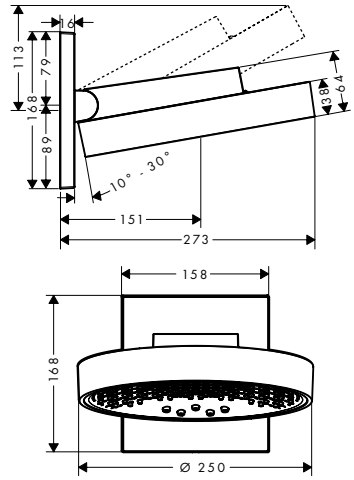

Sustainability

EcoSmart

Technologies

Quick Clean

XXL Performance

Spray types

Powder Rain

Intense Powder Rain

Rain Stream

Certificates/declarations

EPD

Overview variants

Shower head size	Number of sprays	Spray types	Max. flow rate at 3 bar (l/min)	Min. flow pressure (bar)	Finish	Code no.
360	3	PowderRain, Intense PowderRain, RainStream	28.1	1.7	Chrome	26234000
					Brushed Bronze	26234140
					Brushed Black Chrome	26234340
					Matt Black	26234670
					Matt White	26234700
					Polished Gold Optic	26234990
250	3	PowderRain, Intense PowderRain, RainStream	9	1.9	Chrome	26233000
					Matt White	26233700
250	3	PowderRain, Intense PowderRain, RainStream	20	1.7	Chrome	26232000
					Matt White	26232700

Required parts (choose one):			Code no.
Option 1		iBox universal 2 Basic set	01500180
+		Adapter plate for iBox universal 2	13588000
Option 2		iBox universal Basic set	01800180

Measurements within scale drawings are in mm.
Technical specifications and units of measure are subject to change.

Rainfinity Overhead showers 1jet with wall connector

Features of all variants

- consists of: overhead shower, wall connector
- spray type: PowderRain
- frame: metal
- material spray disc: aluminium
- spray disc surface: graphite
- shower head vertically inclinable by 10-30°
- overhead shower removable for cleaning
- installation: wall
- connection thread G ½
- connection dimension: DN15
- not suitable for continuous flow water heaters

360



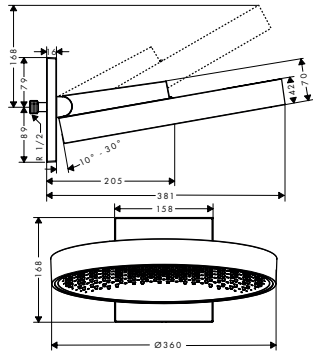

250



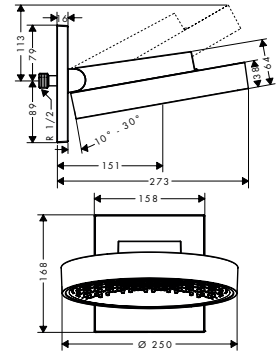

Sustainability

EcoSmart

Technologies

Quick Clean

XXL Performance

Spray types

Powder Rain

Certificates/declarations

EPD

Overview variants

Shower head size	Number of sprays	Spray types	Max. flow rate at 3 bar (l/min)	Min. flow pressure (bar)	Finish	Code no.
360	1	PowderRain	21	2	Chrome	26230000
					Brushed Bronze	26230140
					Brushed Black Chrome	26230340
					Matt Black	26230670
					Matt White	26230700
					Polished Gold Optic	26230990
250	1	PowderRain	9.4	1.8	Chrome	26227000
					Matt White	26227700
250	1	PowderRain	19	1.4	Chrome	26226000
					Matt White	26226700

Rainfinity Overhead showers 1jet

Features of all variants

- spray type: PowderRain
- ball-joint: overhead shower angle (2 x 5°) adjustable
- frame: metal
- material spray disc: aluminium
- spray disc surface: graphite
- overhead shower removable for cleaning
- connection thread G ½
- connection dimension: DN15
- not suitable for continuous flow water heaters

360



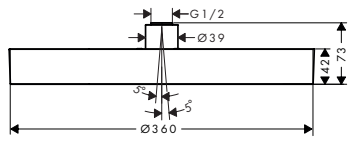

250



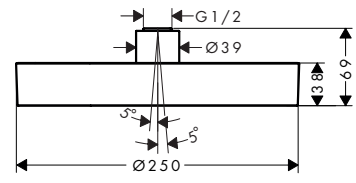

Sustainability

EcoSmart

Technologies

Quick Clean

XXL Performance

Spray types

Powder Rain

Certificates/declarations

EPD

For more information about this product, please see the next page.

Measurements within scale drawings are in mm.
Technical specifications and units of measure are subject to change.

Overhead showers

Rainfinity Overhead showers 1jet

Overview variants

Shower head size	Number of sprays	Spray types	Max. flow rate at 3 bar (l/min)	Min. flow pressure (bar)	Finish	Code no.
360	1	PowderRain	20.3	2	Chrome	26231000
					Brushed Bronze	26231140
					Brushed Black Chrome	26231340
					Matt Black	26231670
					Matt White	26231700
					Polished Gold Optic	26231990
250	1	PowderRain	9	1.1	Chrome	26229000
					Brushed Bronze	26229140
					Brushed Black Chrome	26229340
					Matt Black	26229670
					Matt White	26229700
					Polished Gold Optic	26229990
250	1	PowderRain	16	1	Chrome	26228000
					Brushed Bronze	26228140
					Brushed Black Chrome	26228340
					Matt Black	26228670
					Matt White	26228700
					Polished Gold Optic	26228990

Required parts (choose one):		Finish	Code no.
	Shower arm E 39 cm with rectangular shaft	Chrome	27694000
		Brushed Bronze	27694140
		Brushed Black Chrome	27694340
		Matt Black	27694670
		Matt White	27694700
		Polished Gold Optic	27694990
	Ceiling connector S 10 cm	Chrome	27393000
		Brushed Bronze	27393140
		Brushed Black Chrome	27393340
		Matt Black	27393670
		Matt White	27393700
		Polished Gold Optic	27393990
	Ceiling connector S 30 cm	Chrome	27389000
		Brushed Bronze	27389140
		Brushed Black Chrome	27389340
		Matt Black	27389670
		Matt White	27389700
		Polished Gold Optic	27389990

Measurements within scale drawings are in mm.
Technical specifications and units of measure are subject to change.

Rainmaker Select Overhead showers 3jet with wall connector

Features of all variants

- consists of: overhead shower, wall connector
- shower head size: 586 x 258 mm
- spray type: Rain, RainFlow, MonoRain
- material spray disc: plexiglas
- spray disc surface: easy cleanable spray disc in glass optics
- the 3 spray zones must be controlled via 3 valves or a diverter valve with 3 outlets
- spray disc removable for cleaning
- installation: wall-mounted - based on iBox
- connection type: basic set
- not suitable for continuous flow water heaters



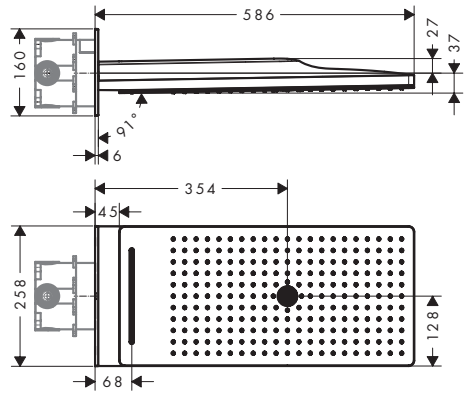

Sustainability

EcoSmart

Technologies

Quick Clean

XXL Performance

Spray types

Rain

Mono Rain

RainFlow

Certificates/declarations

EPD

Overview variants

Shower head size	Number of sprays	Spray types	Max. flow rate at 3 bar (l/min)	Min. flow pressure (bar)	Finish	Code no.
580	3	Rain, RainFlow, MonoRain	9.5	2	White/Chrome	24011400
580	3	Rain, RainFlow, MonoRain	20	1.7	White/Chrome	24001400
					Black/Chrome	24001600

Required parts (choose one):			Code no.
Option 1		iBox universal 2 Basic set	01500180
+		Adapter plate for iBox universal 2	13588000
Option 2		iBox universal Basic set	01800180

Optional parts:		For	Finish	Code no.
	RainSelect Thermostat for concealed installation for 4 functions		Chrome	15382000
	RainSelect Thermostat for concealed installation for 2 functions with integrated shower holder	24011XXX	Chrome	15355000
	ShowerSelect Glass Valve for concealed installation for 3 functions		White/Chrome	15736400
	ShowerSelect Glass Thermostat HighFlow for concealed installation for 1 function and additional outlet		White/Chrome	15735400
	RainSelect Thermostat for concealed installation for 4 functions with integrated shower holder	24001XXX	Chrome	15357000

Measurements within scale drawings are in mm.
Technical specifications and units of measure are subject to change.

Overhead showers

Rainmaker Select Overhead shower 3jet, 2jet, 1jet with shower arm

Features of all variants

- material spray disc: plexiglas
- spray disc surface: easy cleanable spray disc in glass optics
- spray disc removable for cleaning
- overhead shower removable for cleaning
- connection dimension: DN15
- not suitable for continuous flow water heaters

3 spray types



2 spray types



1 spray type



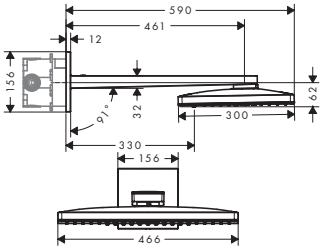

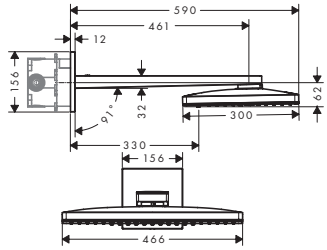

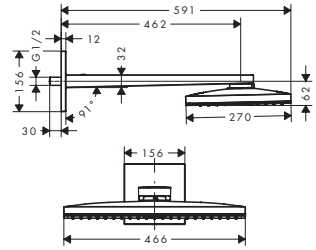

Sustainability

EcoSmart

Technologies

Quick Clean

XXL Performance

Spray types

Rain

Mono Rain

Rain Stream

Certificates/declarations

EPD

Overview variants

Shower head size	Lenght shower arm (mm)	Number of sprays	Spray types	Max. flow rate at 3 bar (l/min)	Min. flow pressure (bar)	Finish	Code no.
460/300	461	3	Rain, RainStream, MonoRain	9	3	White/Chrome	24017400
460/300	461	3	Rain, RainStream, MonoRain	18	1.5	White/Chrome	24007400
460/300	461	2	Rain, RainStream	18	1.5	White/Chrome	24005400
						Black/Chrome	24005600
460/270	462	1	Rain	9	3	White/Chrome	24013400
460/270	462	1	Rain	19	1.5	White/Chrome	24003400
						Black/Chrome	24003600

Required parts (choose one):			For	Code no.
Option 1		iBox universal 2 Basic set	24017XXX 24007XXX 24005XXX	01500180
+		Adapter plate for iBox universal 2	24017XXX 24007XXX 24005XXX	13588000
Option 2		iBox universal Basic set	24017XXX 24007XXX 24005XXX	01800180

Optional parts:		For	Finish	Code no.
	RainSelect Thermostat for concealed installation for 4 functions	24017XXX 24007XXX 24013XXX 24003XXX	Chrome	15382000
	RainSelect Thermostat for concealed installation for 3 functions		Chrome	15381000
	ShowerSelect Glass Valve for concealed installation for 3 functions	24017XXX 24007XXX 24005XXX	White/Chrome	15736400
	ShowerSelect Glass Thermostat HighFlow for concealed installation for 1 function and additional outlet	24017XXX 24007XXX	White/Chrome	15735400

Measurements within scale drawings are in mm.
Technical specifications and units of measure are subject to change.

Rainmaker Select Overhead shower 3jet, 2jet, 1jet with shower arm

Optional parts:		For	Finish	Code no.
	RainSelect Thermostat for concealed installation for 3 functions with integrated shower holder	24005XXX	Chrome	15356000
	ShowerSelect Glass Thermostat HighFlow for concealed installation	24005XXX	White/Chrome	15734400
	ShowerSelect Glass Thermostat for concealed installation for 2 functions	24013XXX 24003XXX	White/Chrome	15738400
	ShowerTablet Select Thermostat 700 universal for exposed installation for 2 functions	24013XXX 24003XXX	Chrome White/Chrome	13184000 13184400

Rainmaker Select Overhead showers 3jet, 2jet, 1jet with ceiling connector

Features of all variants

- consists of: overhead shower, ceiling connector
- material spray disc: plexiglas
- spray disc surface: easy cleanable spray disc in glass optics
- brass ceilling connector
- ceiling connection length: 100 mm
- spray disc removable for cleaning
- overhead shower removable for cleaning
- installation: ceiling
- connection dimension: DN15
- connection type: basic set
- not suitable for continuous flow water heaters

3 spray types



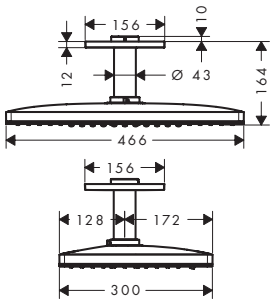

2 spray types



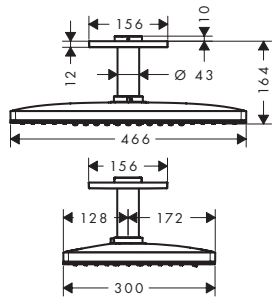

1 spray type



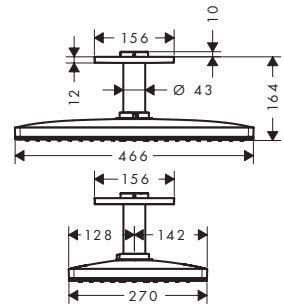

Sustainability

EcoSmart

Technologies

Quick Clean

XXL Performance

Spray types

Rain

Mono Rain

Rain Stream

Certificates/declarations

EPD

Overview variants

Shower head size	Number of sprays	Spray types	Max. flow rate at 3 bar (l/min)	Min. flow pressure (bar)	Finish	Code no.
460/300	3	Rain, RainStream, MonoRain	9	2	White/Chrome	24016400
460/300	3	Rain, RainStream, MonoRain	23	1.5	White/Chrome	24006400
					Black/Chrome	24006600
460/300	2	Rain, RainStream	7.5	2	White/Chrome	24014400
460/300	2	Rain, RainStream	21	1.5	White/Chrome	24004400
460/270	1	Rain	7	2	White/Chrome	24012400
460/270	1	Rain	21	1.5	White/Chrome	24002400

Required parts:		Code no.
	Rainmaker Select Basic set for overhead shower with ceiling connector	24010180

For more information about this product, please see the next page.

Measurements within scale drawings are in mm.
Technical specifications and units of measure are subject to change.

Overhead showers

Rainmaker Select Overhead showers 3jet, 2jet, 1jet with ceiling connector

Optional parts:		For	Finish	Code no.
	ShowerSelect Glass Valve for concealed installation for 3 functions	24016XXX 24006XXX 24014XXX 24004XXX	White/Chrome	15736400
	ShowerSelect Glass Thermostat HighFlow for concealed installation for 1 function and additional outlet	24016XXX 24006XXX	White/Chrome	15735400
	RainSelect Thermostat for concealed installation for 4 functions	24006XXX 24004XXX 24002XXX	Chrome	15382000
	RainSelect Thermostat for concealed installation for 3 functions	24006XXX 24004XXX 24002XXX	Chrome	15381000
	ShowerSelect Glass Thermostat HighFlow for concealed installation	24014XXX 24004XXX	White/Chrome	15734400
	ShowerSelect Glass Thermostat for concealed installation for 2 functions	24012XXX 24002XXX	White/Chrome	15738400
	ShowerTablet Select Thermostat 700 universal for exposed installation for 2 functions	24002XXX	White/Chrome	13184400

Raindance Rainfall Overhead shower 180 2jet

Features

- consists of: overhead shower, wall connector
- shower head size: 180 mm
- spray type: RainAir, RainFlow
- material spray disc: metal
- spray disc surface: chrome
- maximum flow rate at 3 bar: 24 l/min
- flow rate RainAir spray (at 3 bar): 17 l/min
- flow rate RainFlow spray (at 3 bar): 24 l/min
- minimum flow pressure: 2 bar
- the 2 spray zones must be controlled via 2 valves or a diverter valve with 2 outlets
- installation: wall-mounted - based on iBox
- connection dimension: DN15
- suitable for continous flow water heaters



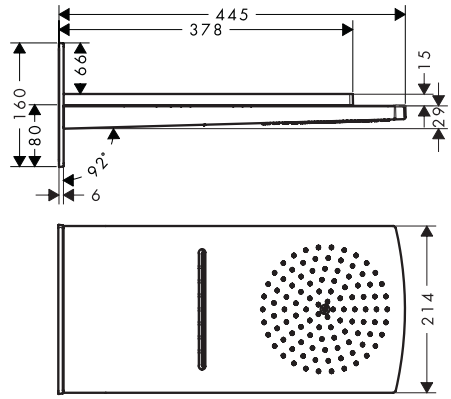

Technologies



Spray types



Certificates/declarations

EPD

Finish	Code no.
Chrome	28433000

⚠ **Required parts (choose one):**			Code no.
Option 1		iBox universal 2 Basic set	01500180
+		Adapter plate for iBox universal 2	13588000
Option 2		iBox universal Basic set	01800180

Optional parts:		Finish	Code no.
	ShowerSelect Valve for concealed installation for 3 functions	Chrome	15764000
	ShowerSelect Thermostat HighFlow for concealed installation	Chrome	15760000

Measurements within scale drawings are in mm.
Technical specifications and units of measure are subject to change.

Raindance Rainfall Overhead shower 150 1jet

Features

- shower head size: 153 mm
- spray type: RainFlow
- ball-joint: overhead shower angle adjustable
- maximum flow rate at 3 bar: 18 l/min
- flow rate RainFlow spray (at 3 bar): 18 l/min
- minimum flow pressure: 1,7 bar
- installation: wall
- connection thread G ½
- connection dimension: DN15
- suitable for continous flow water heaters



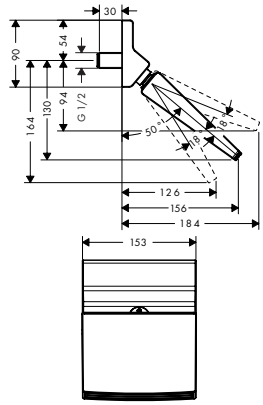

Technologies

XXL Performance

Spray types

RainFlow

Certificates/declarations

EPD

Finish	Code no.
Chrome	26442000

Optional parts:	Finish	Code no.
 ShowerSelect Thermostat for concealed installation for 1 function	Chrome	15762000

Raindance Select S Overhead showers 2jet with shower arm

Features of all variants

- consists of: overhead shower, shower arm
- spray type: RainAir, Rain
- Select button on overhead shower
- ball-joint: overhead shower angle adjustable
- material spray disc: metal
- spray disc surface: chrome
- shower arm length 390 mm
- maximum flow rate at 3 bar: 17 l/min
- flow rate Rain spray (at 3 bar): 17 l/min
- spray disc removable for cleaning
- installation: wall
- connection thread G ½
- connection dimension: DN15
- suitable for continous flow water heaters
- pressure: low

300



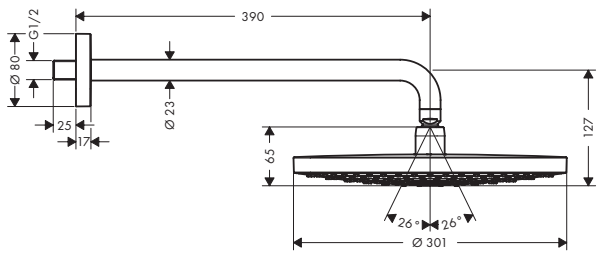

240



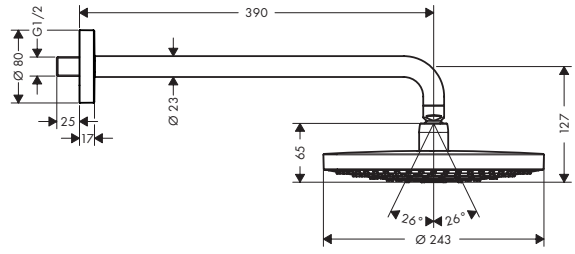

Technologies

Select · Quick Clean · AirPower · XXL Performance

Spray types

Rain Air · Rain

Certificates/declarations

EPD

Overview variants

Shower head size	Number of sprays	Spray types	Max. flow rate at 3 bar (l/min)	Min. flow pressure (bar)	Finish	Code no.
300	2	RainAir, Rain	17	1.5	Chrome	27378000
					White/Chrome	27378400
240	2	RainAir, Rain	17	1	Chrome	26466000

27378400 Spray disc surface: white.

Measurements within scale drawings are in mm.
Technical specifications and units of measure are subject to change.

Overhead showers

Raindance Select S Overhead showers 2jet with ceiling connector

Features of all variants

- consists of: overhead shower, ceiling connector
- spray type: RainAir, Rain
- Select button on overhead shower
- ball-joint: overhead shower angle adjustable
- material spray disc: metal
- spray disc surface: chrome
- brass ceilling connector
- ceiling connection length: 100 mm
- spray disc removable for cleaning
- installation: ceiling
- connection thread G ½
- connection dimension: DN15
- suitable for continous flow water heaters

300



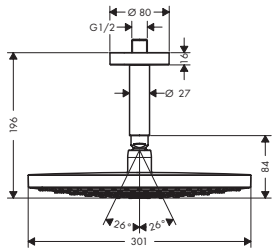

240



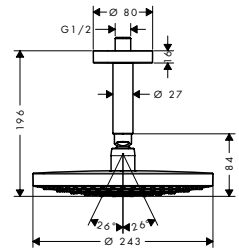

Sustainability

EcoSmart

Technologies

Select · Quick Clean · AirPower · XXL Performance

Spray types

Rain Air · Rain

Certificates/declarations

EPD

Overview variants

Shower head size	Number of sprays	Spray types	Max. flow rate at 3 bar (l/min)	Min. flow pressure (bar)	Finish	Code no.
300	2	RainAir, Rain	17	1.5	White/Chrome	27337400
240	2	RainAir, Rain	9	1.5	Chrome	26469000
240	2	RainAir, Rain	17	1	Chrome	26467000

27337400 Spray disc surface: white.

Raindance S Overhead showers 1jet with shower arm

Features of all variants

- consists of: overhead shower, shower arm
- shower head size: 300 mm
- spray type: RainAir
- ball-joint: overhead shower angle adjustable
- material spray disc: metal
- minimum flow pressure: 1,5 bar
- spray disc removable for cleaning
- installation: wall
- connection thread G ½
- connection dimension: DN15

460 mm



390 mm



Sustainability

EcoSmart

Technologies

Quick Clean · AirPower · XXL Performance

Spray types

Rain Air

Certificates/declarations

EPD

Overview variants

Shower head size	Lenght shower arm (mm)	Number of sprays	Spray types	Max. flow rate at 3 bar (l/min)	Min. flow pressure (bar)	Finish	Code no.
300	460	1	RainAir	18	1.5	Chrome	27492000
300	390	1	RainAir	9	1.5	Chrome	26601000
300	390	1	RainAir	18	1.5	Chrome	27493000

Measurements within scale drawings are in mm.
Technical specifications and units of measure are subject to change.

Raindance S Overhead showers 1jet with ceiling connector

Features of all variants

- consists of: overhead shower, ceiling connector
- ball-joint: overhead shower angle adjustable
- material spray disc: metal
- ceiling connection length: 100 mm
- spray disc removable for cleaning
- installation: ceiling
- connection thread G ½
- connection dimension: DN15
- suitable for continous flow water heaters

300



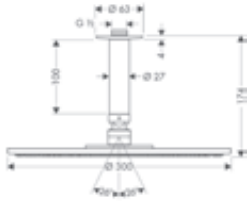

240



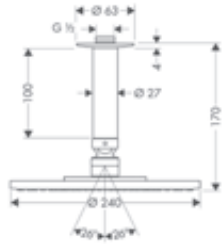

180



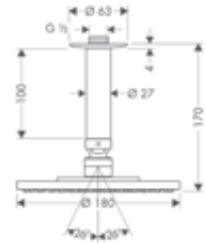

Sustainability

EcoSmart

Technologies

Quick Clean · AirPower · XXL Performance

Spray types

Powder Rain · Rain Air

Certificates/declarations

EPD

Overview variants

Shower head size	Number of sprays	Spray types	Max. flow rate at 3 bar (l/min)	Min. flow pressure (bar)	Finish	Code no.
300	1	RainAir	9	1.5	Chrome	26600000
300	1	RainAir	20	1.5	Chrome	27494000
240	1	PowderRain	18.1	1.1	Chrome	27620000
240	1	RainAir	9	1.5	Chrome	27463000
240	1	RainAir	18	1	Chrome	27477000
180	1	RainAir	18	1.2	Chrome	27478000

Raindance S Overhead showers 1jet with shower arm

Features of all variants

- consists of: overhead shower, shower arm
- shower head size: 240 mm
- ball-joint: overhead shower angle adjustable
- material spray disc: metal
- spray disc removable for cleaning
- installation: wall
- connection thread G ½
- connection dimension: DN15
- suitable for continous flow water heaters

PowderRain



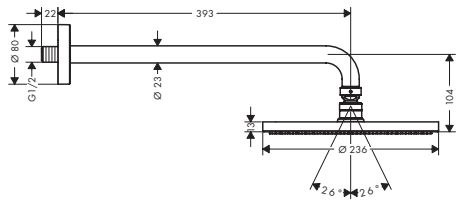

RainAir



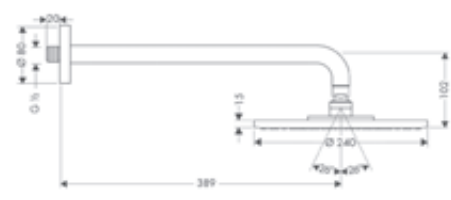

Sustainability

EcoSmart

Technologies

Quick Clean · AirPower · XXL Performance

Spray types

Powder Rain · Rain Air

Certificates/declarations

EPD

For more information about this product, please see the next page.

Measurements within scale drawings are in mm.
Technical specifications and units of measure are subject to change.

Overhead showers

Raindance S Overhead showers 1jet with shower arm

Overview variants

Shower head size	Number of sprays	Spray types	Max. flow rate at 3 bar (l/min)	Min. flow pressure (bar)	Lenght shower arm (mm)	Finish	Code no.
240	1	PowderRain	18.1	1.1	393	Chrome	27607000
240	1	RainAir	8	1.5	389	Chrome	27461000
240	1	RainAir	18	1	389	Chrome	27474000

Consisting of:		Included in	Code no.
	Shower arm 38.9 cm	27607000 27461000 27474000	27413000

Raindance S Overhead shower 240 1jet PowderRain

Features

- shower head size: 240 mm
- spray type: PowderRain
- ball-joint: overhead shower angle adjustable
- material spray disc: metal
- maximum flow rate at 3 bar: 18,1 l/min
- flow rate PowderRain spray (at 3 bar): 18,1 l/min
- function from: 11,8 l/min
- minimum flow pressure: 1,1 bar
- spray disc removable for cleaning
- installation: ceiling or wall
- connection thread G ½
- connection dimension: DN15
- suitable for continous flow water heaters
- pressure: low



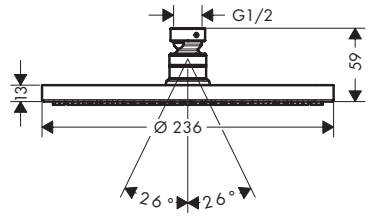

Technologies



Spray types



Certificates/declarations



Finish	Code no.
Chrome	27623000
Matt Black	27623670
Matt White	27623700

Optional parts:		Finish	Code no.
	Shower arm 38.9 cm	Chrome	27413000
		Matt Black	27413670
		Matt White	27413700
	Ceiling connector S 10 cm	Chrome	27393000
		Matt Black	27393670
		Matt White	27393700
	Ceiling connector S 30 cm	Chrome	27389000
		Matt Black	27389670
		Matt White	27389700

Measurements within scale drawings are in mm.
Technical specifications and units of measure are subject to change.

Raindance S Shower systems 1jet with thermostat

Features of all variants

- shower head size: 240 mm
- spray type overhead shower: PowderRain
- maximum flow rate at 3 bar: 18,1 l/min
- max. operating pressure: 6 bar
- nuts shower hose: shower hose with conical nut on both ends
- pivot connector prevents hose from tangling
- connection type: basic set

wall connection with shower holder



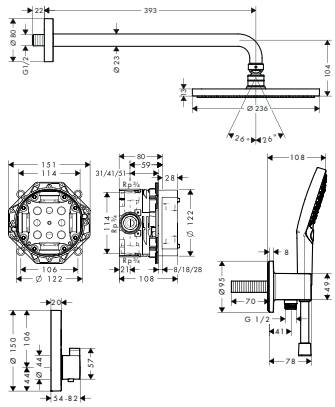

wall connection and shower holder



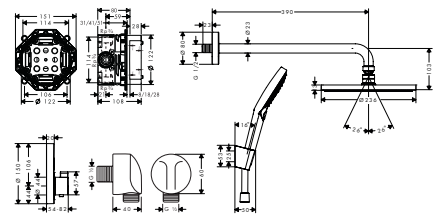

Technologies



Spray types



Overview variants

Special	Spray types	Spray types hand shower	Max. flow rate at 3 bar (l/min)	Min. flow pressure (bar)	Finish	Code no.
wall connection with shower holder	PowderRain	PowderRain, Rain, Whirl	18.1	1	Chrome	27951000
wall connection and shower holder	PowderRain	RainAir, Rain, Whirl	18.1	1.5	Matt Black	27959670

Consisting of:		Included in	Code no.
	Raindance S Overhead shower 240 1jet PowderRain with shower arm	27951000	27607000
	Raindance S Overhead shower 240 1jet PowderRain	27959670	27623670
	Raindance Select S Hand shower 120 3jet PowderRain	27951000	26014000
	Raindance Select S Hand shower 120 3jet	27959670	26530670
	ShowerSelect S Thermostat for concealed installation for 2 functions	27951000 27959670	15743XXX
	iBox universal Basic set	27951000 27959670	01800180
	FixFit S Wall outlet with shower holder	27951000	26888000
	Shower holder Porter S	27959670	28331670
	Isiflex Shower hose 125 cm	27951000 27959670	28272XXX
	Shower arm 38.9 cm	27959670	27413670
	FixFit Wall outlet E without non-return valve	27959670	27454670

Measurements within scale drawings are in mm.
Technical specifications and units of measure are subject to change.

Overhead showers

Raindance E Overhead showers 1jet with shower arm

Features of all variants

- consists of: overhead shower, shower arm
- spray type: RainAir
- ball-joint: overhead shower angle adjustable
- material spray disc: metal
- spray disc removable for cleaning
- installation: wall
- connection thread G ½
- connection dimension: DN15
- suitable for continous flow water heaters

360 with shower arm 39 cm



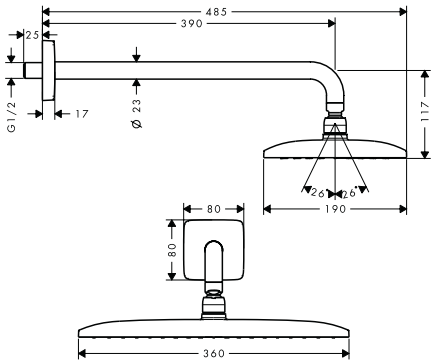

360 with shower arm 24 cm



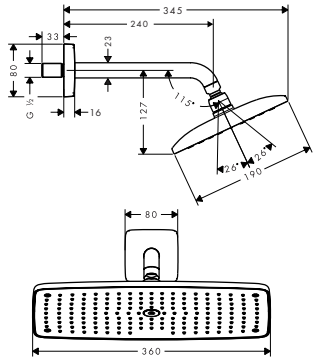

240



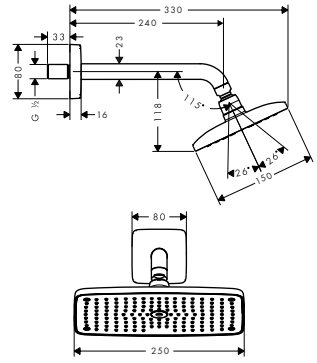

Sustainability

EcoSmart

Technologies

Quick Clean | AirPower | XXL Performance

Spray types

Rain Air

Certificates/declarations

EPD

Overview variants

Shower head size	Lenght shower arm (mm)	Number of sprays	Spray types	Max. flow rate at 3 bar (l/min)	Min. flow pressure (bar)	Finish	Code no.
360	390	1	RainAir	9	1.5	Chrome	26605000
360	390	1	RainAir	16.5	1.3	Chrome	27376000
360	240	1	RainAir	16.5	1.3	Chrome	27371000
240	240	1	RainAir	9	2	Chrome	27375000
240	240	1	RainAir	17.6	1.1	Chrome	27370000

Raindance E Overhead showers 1jet with shower arm

Features of all variants

- consists of: overhead shower, shower arm
- shower head size: 300 x 300 mm
- spray type: RainAir
- ball-joint: overhead shower angle adjustable
- material spray disc: metal
- shower arm length 390 mm
- spray disc removable for cleaning
- installation: wall
- connection thread G ½
- connection dimension: DN15
- suitable for continous flow water heaters



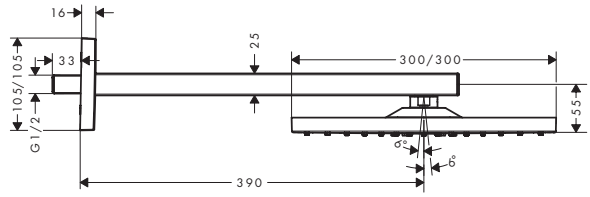

Sustainability

EcoSmart

Technologies

Quick Clean | AirPower | XXL Performance

Spray types

Rain Air

Certificates/declarations

EPD

Measurements within scale drawings are in mm.
Technical specifications and units of measure are subject to change.

Raindance E Overhead showers 1jet with shower arm

Overview variants

Shower head size	Number of sprays	Spray types	Max. flow rate at 3 bar (l/min)	Min. flow pressure (bar)	Finish	Code no.
300	1	RainAir	7.4	1.3	Chrome	26239000
300	1	RainAir	17	1.6	Chrome	26238000
					Brushed Bronze	26238140
					Brushed Black Chrome	26238340
					Matt Black	26238670
					Matt White	26238700
					Polished Gold Optic	26238990

Raindance E Overhead showers 1jet with ceiling connector

Features of all variants

- consists of: overhead shower, ceiling connector
- shower head size: 300 x 300 mm
- spray type: RainAir
- ball-joint: overhead shower angle adjustable
- material spray disc: metal
- brass ceilling connector
- spray disc removable for cleaning
- installation: ceiling
- connection thread G ½
- connection dimension: DN15
- suitable for continous flow water heaters



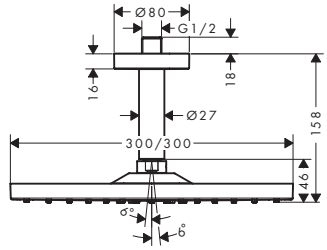

Sustainability

EcoSmart

Technologies

Quick Clean | AirPower | XXL Performance

Spray types

Rain Air

Certificates/declarations

EPD

Overview variants

Shower head size	Number of sprays	Spray types	Max. flow rate at 3 bar (l/min)	Min. flow pressure (bar)	Finish	Code no.
300	1	RainAir	7.4	1.3	Chrome	26251000
300	1	RainAir	17	1.4	Chrome	26250000
					Brushed Bronze	26250140
					Brushed Black Chrome	26250340
					Matt Black	26250670
					Matt White	26250700
					Polished Gold Optic	26250990

Measurements within scale drawings are in mm.
Technical specifications and units of measure are subject to change.

Overhead showers

Raindance E Overhead showers 1jet

Features of all variants

- shower head size: 400 x 400 mm
- spray type: RainAir
- material spray disc: metal
- spray disc removable for cleaning
- installation: flush with the ceiling
- connection thread G ½
- connection dimension: DN15
- connection type: basic set
- suitable for continous flow water heaters



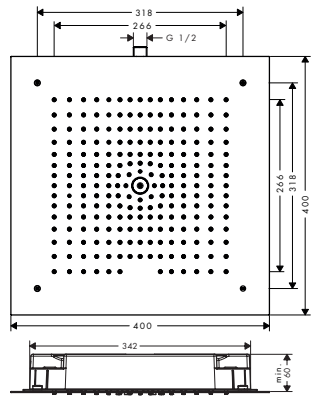

Sustainability

EcoSmart

Technologies

Quick Clean | AirPower | XXL Performance

Spray types

Rain Air

Certificates/declarations

EPD

Overview variants

Shower head size	Number of sprays	Spray types	Max. flow rate at 3 bar (l/min)	Min. flow pressure (bar)	Finish	Code no.
400/400	1	RainAir	9	2	Chrome	26253000
400/400	1	RainAir	20	1.2	Chrome	26252000

Required parts: Code no.



Raindance E Basic set for overhead shower 400/400 1jet — 26254180

Raindance E Overhead showers 1jet with ceiling connector

Features of all variants

- consists of: overhead shower, ceiling connector
- spray type: RainAir
- ball-joint: overhead shower angle adjustable
- material spray disc: metal
- brass ceilling connector
- ceiling connection length: 100 mm
- spray disc removable for cleaning
- installation: ceiling
- connection thread G ½
- connection dimension: DN15

360



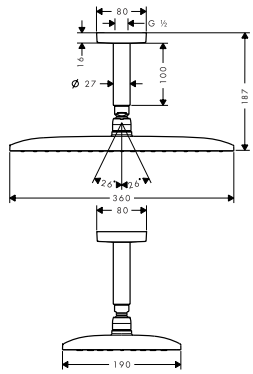

240



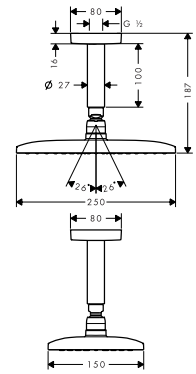

Sustainability

EcoSmart

Technologies

Quick Clean | AirPower | XXL Performance

Spray types

Rain Air

Certificates/declarations

EPD

Overview variants

Shower head size	Number of sprays	Spray types	Max. flow rate at 3 bar (l/min)	Min. flow pressure (bar)	Finish	Code no.
360	1	RainAir	9	1.5	Chrome	26604000
360	1	RainAir	16.5	1.3	Chrome	27381000

Measurements within scale drawings are in mm.
Technical specifications and units of measure are subject to change.

Raindance E Overhead showers 1jet with ceiling connector

Overview variants

Shower head size	Number of sprays	Spray types	Max. flow rate at 3 bar (l/min)	Min. flow pressure (bar)	Finish	Code no.
240	1	RainAir	19.5	1	Chrome	27380000

Raindance E Shower systems 1jet with thermostat

Features of all variants

- shower head size: 300 x 300 mm
- spray type overhead shower: RainAir
- max. operating pressure: 6 bar
- description thermostat: ShowerSelect
- pivot connector prevents hose from tangling
- connection type: basic set

wall connection with shower holder



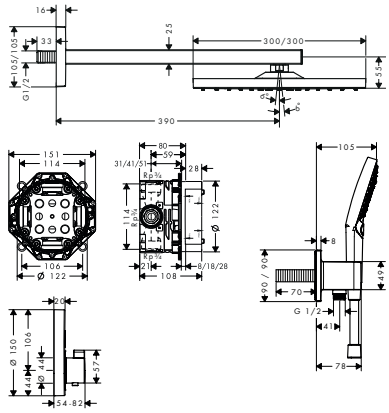

wall connection and shower holder



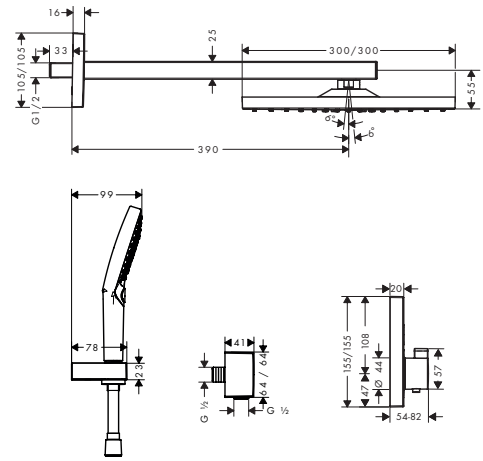

Technologies



Spray types



Overview variants

Special	Spray types	Spray types hand shower	Max. flow rate at 3 bar (l/min)	Min. flow pressure (bar)	Finish	Code no.
wall connection with shower holder	RainAir	PowderRain, Rain, Whirl	17.1	1.5	Chrome	27952000
wall connection and shower holder	RainAir	Rain, RainAir, Whirl	17	1.6	Matt Black	27939670

Consisting of:		Included in	Code no.
	Raindance E Overhead shower 300 1jet with shower arm	27939670 27952000	26238XXX
	Raindance Select S Hand shower 120 3jet PowderRain	27952000	26014000
	Raindance Select S Hand shower 120 3jet	27939670	26530670
	ShowerSelect Thermostat for concealed installation for 2 functions	27939670 27952000	15763XXX
	FixFit E Wall outlet with shower holder	27952000	26889000
	Shower holder Porter E	27939670	28387670
	Isiflex Shower hose 125 cm	27952000 27939670	28272XXX
	iBox universal Basic set	27952000 27939670	01800180
	FixFit Wall outlet Square with non-return valve	27939670	26455670

Measurements within scale drawings are in mm.
Technical specifications and units of measure are subject to change.

Overhead showers

Raindance Overhead showers 1jet

Features of all variants

- shower head size: 260 x 260 mm
- spray type: RainAir
- material spray disc: metal
- spray disc removable for cleaning
- installation: flush with the ceiling
- connection thread G ½
- connection dimension: DN15
- suitable for continous flow water heaters

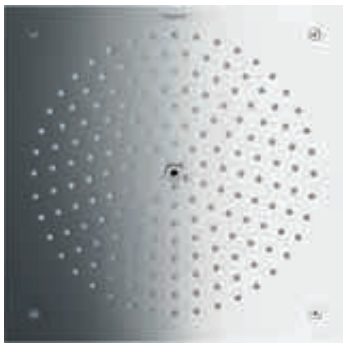

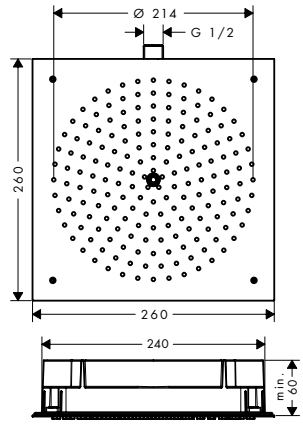

Sustainability

EcoSmart

Technologies

Quick Clean · AirPower · XXL Performance

Spray types

Rain Air

Certificates/declarations

EPD

Overview variants

Shower head size	Number of sprays	Spray types	Max. flow rate at 3 bar (l/min)	Min. flow pressure (bar)	Finish	Code no.
260/260	1	RainAir	8	1.2	Chrome	26481000
260/260	1	RainAir	15	1.7	Chrome	26472000

Required parts:		Code no.
	Raindance Basic set for overhead shower 260/260 1jet	26471180

Optional parts:		Finish	Code no.
	ShowerSelect Thermostat for concealed installation for 2 functions	Chrome	15763000

Raindance Classic Overhead shower 240 1jet with ceiling connector

Features

- consists of: overhead shower, ceiling connector
- shower head size: 270 mm
- spray type: RainAir
- ball-joint: overhead shower angle adjustable
- material spray disc: metal
- ceiling connection length: 100 mm
- maximum flow rate at 3 bar: 19 l/min
- flow rate RainAir spray (at 3 bar): 19 l/min
- minimum flow pressure: 1 bar
- spray disc removable for cleaning
- installation: ceiling
- connection thread G ½
- connection dimension: DN15
- suitable for continous flow water heaters



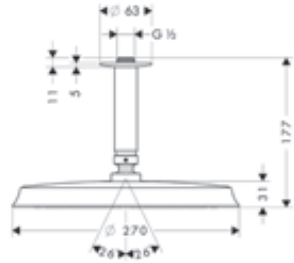

Technologies

Quick Clean · AirPower · XXL Performance

Spray types

Rain Air

Finish	Code no.
Chrome	27405000

Measurements within scale drawings are in mm.
Technical specifications and units of measure are subject to change.

Pulsify S Overhead showers 2jet with wall connector

Features of all variants

- consists of: overhead shower, wall connector
- shower head size: 260 mm
- spray type: PowderRain, Intense PowderRain
- Fast Drain empties the overhead shower from an angle of 10°
- ball-joint: ball-joint for easy angle adjustment, variable from 15 - 36°
- material spray disc: plastic
- spray disc surface: graphite
- overhead shower removable for cleaning
- installation: wall-mounted - based on iBox
- connection type: basic set



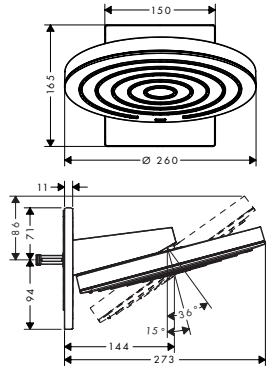

Sustainability

EcoSmart

Technologies

Adjustable Shower Head · Fast Drain · Quick Clean · XXL Performance

Spray types

Powder Rain · Intense Powder Rain

Overview variants

Shower head size	Number of sprays	Spray types	Max. flow rate at 3 bar (l/min)	Min. flow pressure (bar)	Finish	Code no.
260	2	PowderRain, Intense PowderRain	7.4	1.6	Chrome	24151000
					Matt Black	24151670
					Matt White	24151700
260	2	PowderRain, Intense PowderRain	11.3	1.4	Chrome	24150000
					Matt Black	24150670
					Matt White	24150700

Required parts (choose one):		For	Code no.
Option 1	iBox universal 2 Basic set	24150XXX	01500180
+	Adapter plate for iBox universal 2	24150XXX	13588000
Option 2	iBox universal Basic set	24150XXX	01800180

Pulsify S Overhead showers 1jet

Features of all variants

- shower head size: 260 mm
- spray type: PowderRain
- Fast Drain empties the overhead shower from an angle of 10°
- ball-joint: overhead shower angle adjustable
- material spray disc: plastic
- spray disc surface: graphite
- installation: ceiling or wall
- connection thread G ½
- connection dimension: DN15
- suitable for continous flow water heaters



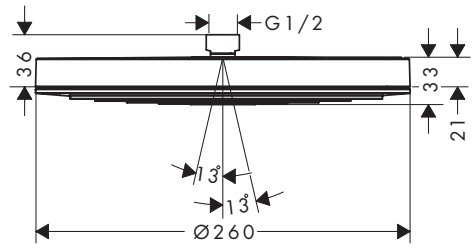

Sustainability

EcoSmart

Technologies

Adjustable Shower Head · Fast Drain · Quick Clean · XXL Performance

Spray types

Powder Rain

For more information about this product, please see the next page.

Measurements within scale drawings are in mm.
Technical specifications and units of measure are subject to change.

Overhead showers

Pulsify S Overhead showers 1jet

Overview variants

Shower head size	Number of sprays	Spray types	Max. flow rate at 3 bar (l/min)	Min. flow pressure (bar)	Finish	Code no.
260	1	PowderRain	8.4	0.8	Chrome	24141000
					Brushed Bronze	24141140
					Matt Black	24141670
					Matt White	24141700
260	1	PowderRain	12.3	1	Chrome	24140000
					Brushed Bronze	24140140
					Matt Black	24140670
					Matt White	24140700

Required parts (choose one):		Finish	Code no.
	Pulsify Wall connector for overhead shower 260	Chrome	24149000
		Brushed Bronze	24149140
		Matt Black	24149670
		Matt White	24149700
	Shower arm S 39 cm	Chrome	24357000
		Brushed Bronze	24357140
		Matt Black	24357670
		Matt White	24357700
	Ceiling connector S 10 cm	Chrome	27393000
		Brushed Bronze	27393140
		Matt Black	27393670
		Matt White	27393700
	Ceiling connector S 30 cm	Chrome	27389000
		Brushed Bronze	27389140
		Matt Black	27389670
		Matt White	27389700

Pulsify S Overhead showers 1jet

Features of all variants

- shower head size: 105 mm
- spray type: PowderRain
- ball-joint: overhead shower angle adjustable
- material spray disc: plastic
- spray disc surface: graphite
- connection thread G ½
- connection dimension: DN15
- suitable for continous flow water heaters



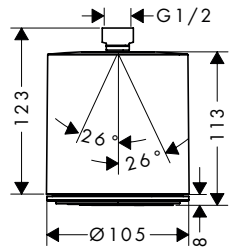

Sustainability

Eco Smart+

Technologies

Adjustable Shower Head | Quick Clean | XXL Performance

Spray types

Powder Rain

Overview variants

Shower head size	Number of sprays	Spray types	Max. flow rate at 3 bar (l/min)	Min. flow pressure (bar)	Finish	Code no.
105	1	PowderRain	6	1	Chrome	24132000
					Matt Black	24132670
					Matt White	24132700

Measurements within scale drawings are in mm.
Technical specifications and units of measure are subject to change.

Pulsify S Overhead showers 1jet

Overview variants

Shower head size	Number of sprays	Spray types	Max. flow rate at 3 bar (l/min)	Min. flow pressure (bar)	Finish	Code no.
105	1	PowderRain	11.7	0.8	Chrome	24130000
					Brushed Bronze	24130140
					Matt Black	24130670
					Matt White	24130700

Optional parts:		Finish	Code no.
	Pulsify Wall connector for overhead shower 105	Chrome	24139000
		Brushed Bronze	24139140
		Matt Black	24139670
		Matt White	24139700

Pulsify E Overhead showers 2jet with wall connector

Features of all variants

- consists of: overhead shower, wall connector
- shower head size: 260 x 260 mm
- spray type: PowderRain, Intense PowderRain
- Fast Drain empties the overhead shower from an angle of 10°
- ball-joint: overhead shower angle adjustable
- material spray disc: plastic
- spray disc surface: graphite
- minimum flow pressure: 1,3 bar
- overhead shower removable for cleaning
- installation: wall-mounted - based on iBox
- connection type: basic set
- suitable for continous flow water heaters



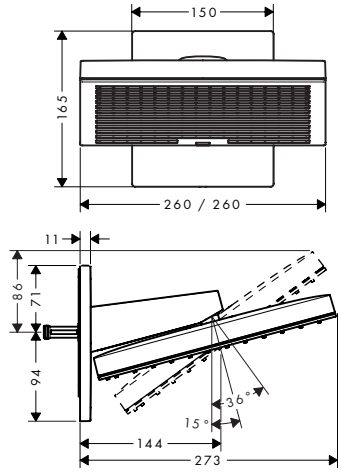

Sustainability

EcoSmart

Technologies

Adjustable Shower Head · Fast Drain · Quick Clean · XXL Performance

Spray types

Powder Rain · Intense Powder Rain

Overview variants

Shower head size	Number of sprays	Spray types	Max. flow rate at 3 bar (l/min)	Min. flow pressure (bar)	Finish	Code no.
260	2	PowderRain, Intense PowderRain	8	1.3	Chrome	24351000
					Matt Black	24351670
					Matt White	24351700
260	2	PowderRain, Intense PowderRain	10.8	1.3	Chrome	24350000
					Matt Black	24350670
					Matt White	24350700

Required parts (choose one):			Code no.
Option 1		iBox universal 2 Basic set	01500180
+		Adapter plate for iBox universal 2	13588000
Option 2		iBox universal Basic set	01800180

Measurements within scale drawings are in mm.
Technical specifications and units of measure are subject to change.

Overhead showers

Pulsify E Overhead showers 1jet

Features of all variants

- shower head size: 260 x 260 mm
- spray type: PowderRain
- Fast Drain empties the overhead shower from an angle of 10°
- material spray disc: plastic
- spray disc surface: graphite
- minimum flow pressure: 0,9 bar
- installation: ceiling or wall
- connection thread G ½
- suitable for continous flow water heaters



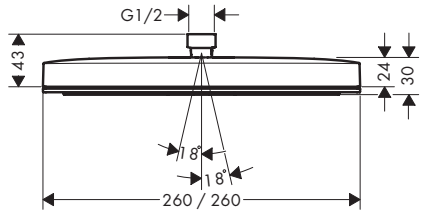

Sustainability

Eco Smart+ | EcoSmart

Technologies

Adjustable Shower Head | Fast Drain | Quick Clean | XXL Performance

Spray types

Powder Rain

Overview variants

Shower head size	Number of sprays	Spray types	Max. flow rate at 3 bar (l/min)	Min. flow pressure (bar)	Finish	Code no.
260	1	PowderRain	5.5	0.9	Chrome	24333000
					Brushed Bronze	24333140
					Matt Black	24333670
					Matt White	24333700
260	1	PowderRain	8.4	0.9	Chrome	24331000
					Brushed Bronze	24331140
					Matt Black	24331670
					Matt White	24331700
260	1	PowderRain	11.7	0.9	Chrome	24330000
					Brushed Bronze	24330140
					Matt Black	24330670
					Matt White	24330700

Required parts (choose one):	Finish	Code no.
Shower arm E 39 cm	Chrome	24337000
	Brushed Bronze	24337140
	Matt Black	24337670
	Matt White	24337700
Ceiling connector E 10 cm	Chrome	24338000
	Brushed Bronze	24338140
	Matt Black	24338670
	Matt White	24338700
Ceiling connector E 30 cm	Chrome	24339000
	Brushed Bronze	24339140
	Matt Black	24339670
	Matt White	24339700

Measurements within scale drawings are in mm.
Technical specifications and units of measure are subject to change.

Croma Select S Overhead shower 180 2jet

Features

- shower head size: 180 mm
- spray type: Rain, IntenseRain
- Select button on overhead shower
- ball-joint: overhead shower angle adjustable
- material spray disc: plastic
- maximum flow rate at 3 bar: 17 l/min
- flow rate Rain spray (at 3 bar): 17 l/min
- flow rate IntenseRain spray (at 3 bar): 16 l/min
- minimum flow pressure: 1 bar
- spray disc removable for cleaning
- installation: ceiling or wall
- connection thread G ½
- connection dimension: DN15
- suitable for continous flow water heaters
- pressure: low



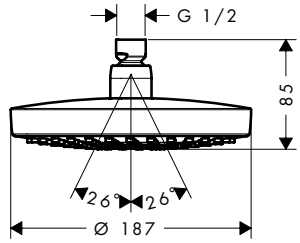

Technologies

Spray types

Certificates/declarations

Finish	Code no.
Chrome	26522000

Optional parts:		Finish	Code no.
	Shower arm 38.9 cm	Chrome	27413000
	Ceiling connector S 10 cm	Chrome	27393000
	Ceiling connector S 30 cm	Chrome	27389000

Croma Select E Overhead showers 2jet

Features of all variants

- shower head size: 187 x 187 mm
- spray type: Rain, IntenseRain
- Select button on overhead shower
- ball-joint: overhead shower angle adjustable
- material spray disc: plastic
- minimum flow pressure: 1 bar
- spray disc removable for cleaning
- installation: ceiling or wall
- connection thread G ½
- connection dimension: DN15
- suitable for continous flow water heaters



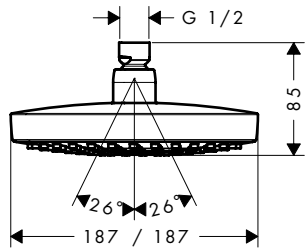

Sustainability

Technologies

Spray types

Certificates/declarations

Overview variants

Shower head size	Number of sprays	Spray types	Max. flow rate at 3 bar (l/min)	Min. flow pressure (bar)	Finish	Code no.
180	2	Rain, IntenseRain	9	1	White/Chrome	26528400
180	2	Rain, IntenseRain	17	1	Chrome	26524000
					White/Chrome	26524400

For more information about this product, please see the next page.

Measurements within scale drawings are in mm.
Technical specifications and units of measure are subject to change.

Overhead showers

Croma Select E Overhead showers 2jet

Required parts (choose one):		Finish	Code no.
	Shower arm E 38.9 cm	Chrome	27446000
	Ceiling connector E 10 cm	Chrome	27467000

Croma E Overhead showers 1jet

Features of all variants

- shower head size: 280 x 170 mm
- spray type: RainAir
- ball-joint: overhead shower angle adjustable
- material spray disc: metal
- spray disc removable for cleaning
- installation: ceiling or wall
- connection thread G ½
- connection dimension: DN15
- suitable for continous flow water heaters



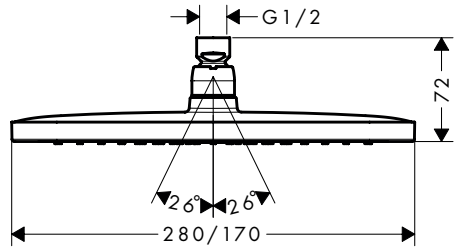

Sustainability

EcoSmart

Technologies

Quick Clean · AirPower · XXL Performance

Spray types

Rain Air

Certificates/declarations

EPD

Overview variants

Shower head size	Number of sprays	Spray types	Max. flow rate at 3 bar (l/min)	Min. flow pressure (bar)	Finish	Code no.
280	1	RainAir	8	1.4	Chrome	26258000
280	1	RainAir	18.3	1.1	Chrome	26257000

Optional parts:		Finish	Code no.
	Shower arm E 38.9 cm	Chrome	27446000
	Ceiling connector E 10 cm	Chrome	27467000
	Ceiling connector E 30 cm	Chrome	27388000

Measurements within scale drawings are in mm.
Technical specifications and units of measure are subject to change.

Croma E Shower system 280 1jet with Ecostat E

Features

- consists of: overhead shower, hand shower, shower arm, Thermostat, basic set, wall outlet, shower hose
- shower head size: 280 x 170 mm
- spray type overhead shower: RainAir
- spray type hand shower: Rain, IntenseRain, TurboRain
- maximum flow rate at 3 bar: 18,3 l/min
- minimum flow pressure: 1 bar
- max. operating pressure: 6 bar
- nuts shower hose: shower hose with conical nut on both ends
- pivot connector prevents hose from tangling



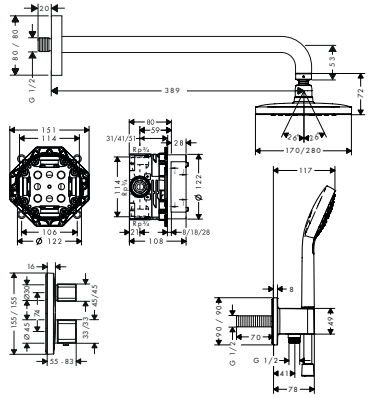

Technologies

Quick Clean · AirPower · XXL Performance

Spray types

Rain Air · Rain · Intense Rain · Turbo Rain

Finish	Code no.
Chrome	27953000

Consisting of:		Included in	Code no.
	iBox universal Basic set	27953000	01800180
	Ecostat E Thermostat for concealed installation for 2 functions	27953000	15708000
	Croma E Overhead shower 280 1jet	27953000	26257000
	Croma Select E Hand shower 110 Vario	27953000	26812400
	Shower arm E 38.9 cm	27953000	27446000
	Isiflex Shower hose 125 cm	27953000	28272000

Croma Overhead showers 1jet

Features of all variants

- spray type: RainAir
- ball-joint: overhead shower angle adjustable
- material spray disc: metal
- spray disc removable for cleaning
- installation: ceiling or wall
- connection thread G ½
- connection dimension: DN15
- suitable for continous flow water heaters

280



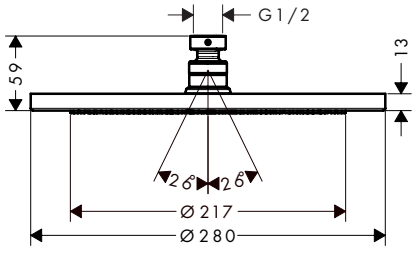

220



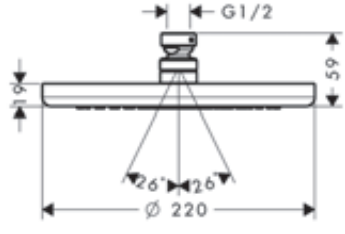

Sustainability

EcoSmart

Technologies

Quick Clean · AirPower · XXL Performance

Spray types

Rain Air

Certificates/declarations

EPD

For more information about this product, please see the next page.

Measurements within scale drawings are in mm.
Technical specifications and units of measure are subject to change.

Overhead showers

Croma Overhead showers 1jet

Overview variants

Shower head size	Number of sprays	Spray types	Max. flow rate at 3 bar (l/min)	Min. flow pressure (bar)	Finish	Code no.
280	1	RainAir	8.5	2	Chrome	26221000
					Brushed Bronze	26221140
					Brushed Black Chrome	26221340
					Matt Black	26221670
					Matt White	26221700
					Polished Gold Optic	26221990
280	1	RainAir	15.6	1.5	Chrome	26220000
					Brushed Bronze	26220140
					Brushed Black Chrome	26220340
					Matt Black	26220670
					Matt White	26220700
					Polished Gold Optic	26220990
220	1	RainAir	9	1.3	Chrome	26465000
220	1	RainAir	19	1	Chrome	26464000

Optional parts:			Code no.
	Shower arm 38.9 cm	Chrome	27413000
		Brushed Bronze	27413140
		Brushed Black Chrome	27413340
		Matt Black	27413670
		Matt White	27413700
		Polished Gold Optic	27413990
	Ceiling connector S 10 cm	Chrome	27393000
		Brushed Bronze	27393140
		Brushed Black Chrome	27393340
		Matt Black	27393670
		Matt White	27393700
	Ceiling connector S 30 cm	Chrome	27389000
		Brushed Bronze	27389140
		Brushed Black Chrome	27389340
		Matt Black	27389670
		Matt White	27389700

Measurements within scale drawings are in mm.
Technical specifications and units of measure are subject to change.

Croma Shower systems 1jet with thermostat

Features of all variants

- shower head size: 280 mm
- spray type overhead shower: RainAir
- maximum flow rate at 3 bar: 15,6 l/min
- minimum flow pressure: 1,5 bar
- max. operating pressure: 6 bar
- pivot connector prevents hose from tangling
- connection type: basic set

wall connection and shower holder

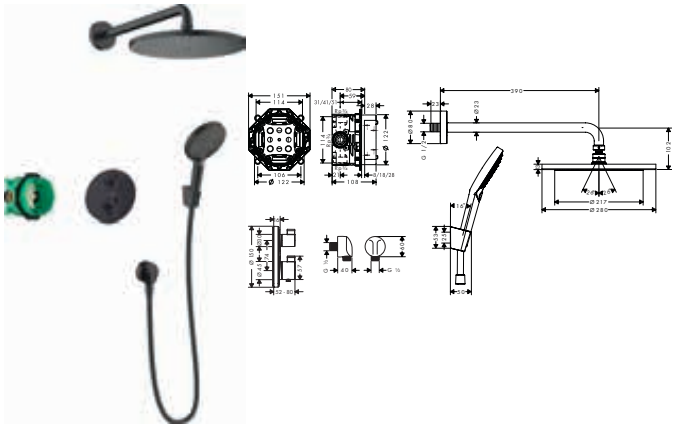

wall connection with shower holder

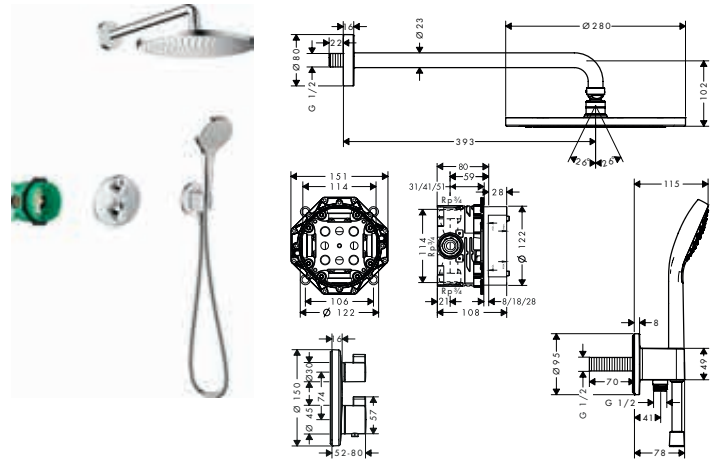

Technologies



Spray types



Overview variants

Special	Shower head size	Spray types	Max. flow rate at 3 bar (l/min)	Min. flow pressure (bar)	Hand shower	Spray types hand shower	Finish	Code no.
wall connection and shower holder	280	RainAir	15.6	1.5	120 3jet	RainAir, Rain, Whirl	Matt Black	27961670
wall connection with shower holder	280	RainAir	15.6	1.5	110 Vario	Rain, IntenseRain, TurboRain	Chrome	27954000

Consisting of:		Included in	Code no.
	iBox universal Basic set	27961670 27954000	01800180
	Ecostat S Thermostat for concealed installation for 2 functions	27961670 27954000	15758XXX
	Croma Overhead shower 280 1jet	27961670 27954000	26220XXX
	Raindance Select S Hand shower 120 3jet	27961670	26530670
	Croma Select S Hand shower 110 Vario	27954000	26802400
	Shower arm 38.9 cm	27961670 27954000	27413XXX
	FixFit Wall outlet E without non-return valve	27961670	27454670
	Isiflex Shower hose 125 cm	27954000 27961670	28272XXX
	Shower holder Porter S	27961670	28331670
	FixFit S Wall outlet with shower holder	27954000	26888000

Measurements within scale drawings are in mm.
Technical specifications and units of measure are subject to change.

Overhead showers

Croma 100 Overhead shower Vario

Features

- shower head size: 100 mm
- spray type: Rain, Massage spray, Shampoo spray, normal spray
- adjustment with shift on overhead shower
- ball-joint: overhead shower angle adjustable
- material spray disc: plastic
- spray disc surface: grey
- maximum flow rate at 3 bar: 22 l/min
- flow rate Rain spray (at 3 bar): 22 l/min
- flow rate shampoo spray (at 3 bar): 17 l/min
- flow rate normal spray (at 3 bar): 20 l/min
- flow rate massage spray (at 3 bar): 11 l/min
- minimum flow pressure: 1,2 bar
- installation: ceiling or wall
- connection thread G ½
- connection dimension: DN15
- suitable for continous flow water heaters
- pressure: low



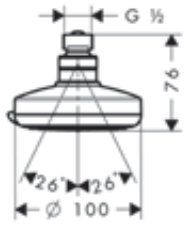

Technologies

Quick Clean · XXL Performance

Spray types

Normal · Rain · Shampoo · Massage

Certificates/declarations

EPD

Finish	Code no.
Chrome	27441000

Optional parts:	Finish	Code no.
 Shower arm 12.8 cm	Chrome	27411000

Crometta S Overhead showers 1jet

Features of all variants

- shower head size: 240 mm
- spray type: Rain
- ball-joint: overhead shower angle adjustable
- material spray disc: plastic
- minimum flow pressure: 1 bar
- installation: ceiling or wall
- connection thread G ½
- connection dimension: DN15
- suitable for continous flow water heaters



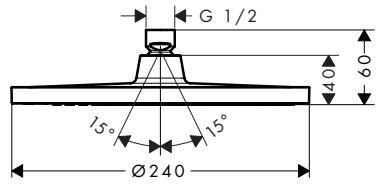

Sustainability

EcoSmart

Technologies

Quick Clean · XXL Performance

Spray types

Rain

Certificates/declarations

EPD

Overview variants

Shower head size	Number of sprays	Spray types	Max. flow rate at 3 bar (l/min)	Min. flow pressure (bar)	Finish	Code no.
240	1	Rain	9	1	Chrome	26724000
					Matt Black	26724670
240	1	Rain	16.7	1	Chrome	26723000
					Matt Black	26723670

Measurements within scale drawings are in mm.
Technical specifications and units of measure are subject to change.

Crometta S Overhead shower 240 1jet LowPressure

Features

- shower head size: 240 mm
- spray type: Rain
- ball-joint: overhead shower angle adjustable
- material spray disc: plastic
- maximum flow rate at 3 bar: 21 l/min
- flow rate (at 0,2 bar): 7 l/min
- minimum flow pressure: 0.2 bar
- installation: ceiling or wall
- connection thread G ½
- connection dimension: DN15
- suitable for continous flow water heaters



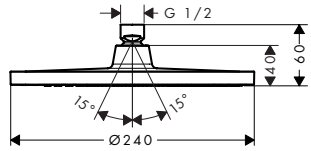

Technologies



Spray types



Finish	Code no.
Chrome	26725000

Required parts (choose one):		Finish	Code no.
	Vernis Shape Shower arm 24 cm	Chrome	26405000
	Vernis Shape Ceiling connector 10 cm	Chrome	26406000
	Vernis Shape Ceiling connector 30 cm	Chrome	26407000

Crometta S Shower system 240 1jet with single lever mixer

Features

- consists of: overhead shower, hand shower, shower arm, single lever bath mixer, basic set, wall outlet, shower holder, shower hose
- shower head size: 240 mm
- spray type overhead shower: Rain
- spray type hand shower: Rain, IntenseRain
- minimum flow pressure: 1 bar
- max. operating pressure: 6 bar
- nuts shower hose: shower hose with conical nut on both ends
- pivot connector prevents hose from tangling



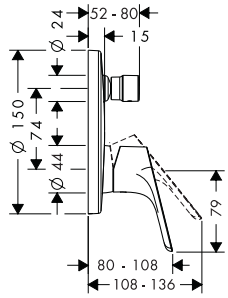

Technologies



Spray types



Finish	Code no.
Chrome	27958000

Consisting of:		Included in	Code no.
	iBox universal Basic set	27958000	01800180
	Crometta Hand shower 100 Vario	27958000	26330400
	Crometta S Overhead shower 240 1jet	27958000	26723000
	Isiflex Shower hose 125 cm	27958000	28272000
	Shower holder Porter S	27958000	28331000
	Focus Single lever bath mixer for concealed installation for iBox universal	27958000	31945000

Measurements within scale drawings are in mm.
Technical specifications and units of measure are subject to change.

Overhead showers

Crometta E Overhead showers 1jet

Features of all variants

- shower head size: 240 x 240 mm
- spray type: Rain
- ball-joint: overhead shower angle adjustable
- material spray disc: plastic
- minimum flow pressure: 1 bar
- installation: ceiling or wall
- connection thread G ½
- connection dimension: DN15
- suitable for continous flow water heaters



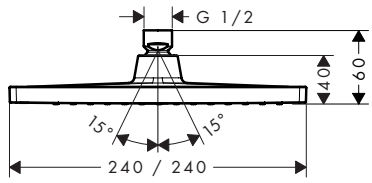

Sustainability

EcoSmart

Technologies

Quick Clean

XXL Performance

Spray types

Rain

Certificates/declarations

EPD

Overview variants

Shower head size	Number of sprays	Spray types	Max. flow rate at 3 bar (l/min)	Min. flow pressure (bar)	Finish	Code no.
240	1	Rain	8.1	1	Chrome	26727000
					Matt Black	26727670
240	1	Rain	15.9	1	Chrome	26726000
					Matt Black	26726670

Required parts (choose one):	Finish	Code no.
Vernis Shape Shower arm 24 cm	Chrome	26405000
	Matt Black	26405670
Vernis Shape Ceiling connector 10 cm	Chrome	26406000
	Matt Black	26406670
Vernis Shape Ceiling connector 30 cm	Chrome	26407000
	Matt Black	26407670

Crometta E Overhead shower 240 1jet LowPressure

Features

- shower head size: 240 x 240 mm
- spray type: Rain
- ball-joint: overhead shower angle adjustable
- material spray disc: plastic
- maximum flow rate at 3 bar: 21 l/min
- flow rate (at 0,2 bar): 7 l/min
- minimum flow pressure: 0.2 bar
- installation: ceiling or wall
- connection thread G ½
- connection dimension: DN15
- suitable for continous flow water heaters
- pressure: low



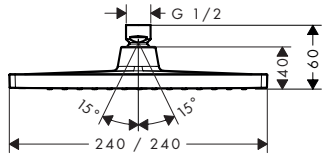

Technologies

Quick Clean

XXL Performance

Low Pressure

Spray types

Rain

Finish	Code no.
Chrome	26722000

Measurements within scale drawings are in mm.
Technical specifications and units of measure are subject to change.

Crometta E Overhead shower 240 1jet LowPressure

Required parts (choose one):		Finish	Code no.
	Vernis Shape Shower arm 24 cm	Chrome	26405000
	Vernis Shape Ceiling connector 10 cm	Chrome	26406000
	Vernis Shape Ceiling connector 30 cm	Chrome	26407000

Crometta E Shower system 240 1jet with single lever mixer

Features

- consists of: overhead shower, hand shower, shower arm, single lever bath mixer, basic set, wall outlet, shower holder, shower hose
- shower head size: 240 x 240 mm
- spray type overhead shower: Rain
- spray type hand shower: Rain, IntenseRain
- maximum flow rate at 3 bar: 18 l/min
- minimum flow pressure: 1 bar
- max. operating pressure: 6 bar
- pivot connector prevents hose from tangling
- connection type: basic set



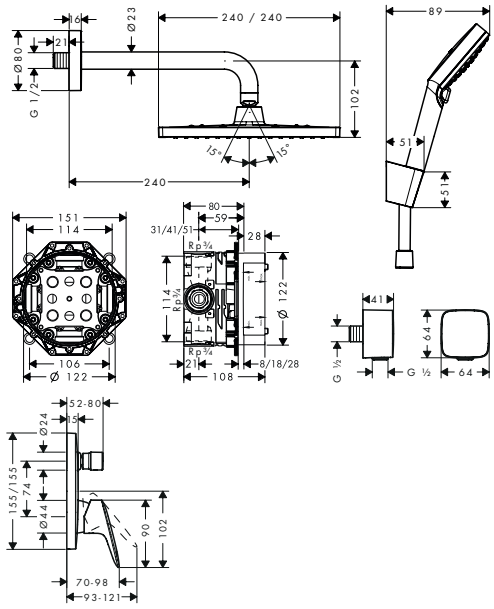

Technologies



Spray types



Finish	Code no.
Chrome	27957000

Consisting of:		Included in	Code no.
	iBox universal Basic set	27957000	01800180
	Crometta Hand shower 100 Vario	27957000	26330400
	FixFit Wall outlet with non-return valve	27957000	26457000
	Crometta E Overhead shower 240 1jet	27957000	26726000
	Isiflex Shower hose 125 cm	27957000	28272000
	Shower holder Porter S	27957000	28331000
	Logis Single lever bath mixer for concealed installation for iBox universal	27957000	71405000

Measurements within scale drawings are in mm.
Technical specifications and units of measure are subject to change.

Overhead showers

Crometta 85 Overhead shower 1jet Green 6 l/min

Features

- shower head size: 85 mm
- spray type: normal spray
- ball-joint: overhead shower angle adjustable
- material spray disc: plastic
- spray disc surface: grey
- maximum flow rate at 3 bar: 5,7 l/min
- flow rate normal spray (at 3 bar): 5,7 l/min
- minimum flow pressure: 0,9 bar
- installation: ceiling or wall
- connection thread G ½
- connection dimension: DN15
- suitable for continous flow water heaters
- EU taxonomy: max. 6 l/min - Substantial Contribution (SC) possible
- pressure: medium-high



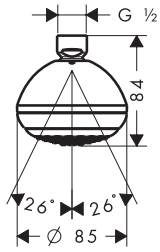

Sustainability

Technologies

Spray types

Certificates/declarations

Finish	Code no.
Chrome	28423000

Vernis Blend Overhead showers 1jet

Features of all variants

- shower head size: 205 mm
- spray type: Rain
- ball-joint: overhead shower angle adjustable
- material spray disc: plastic
- overhead shower removable for cleaning
- installation: ceiling or wall
- connection thread G ½
- connection dimension: DN15
- suitable for continous flow water heaters



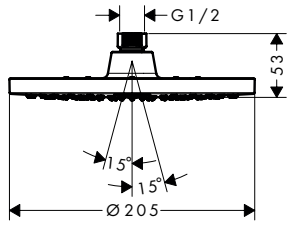

Sustainability

Technologies

Spray types

Certificates/declarations

Overview variants

Shower head size	Number of sprays	Spray types	Max. flow rate at 3 bar (l/min)	Min. flow pressure (bar)	Finish	Code no.
200	1	Rain	5.4	0.6	Chrome	26093000
200	1	Rain	8.7	0.6	Chrome	26277000
					Matt Black	26277670
200	1	Rain	12.4	0.6	Chrome	26271000
					Matt Black	26271670
200	1	Rain	11.2	1	Chrome	26271007
					Matt Black	26271677

Optional parts:	For	Finish	Code no.
Vernis Blend Ceiling connector 30 cm	26271CHN	Chrome	27805007
		Matt Black	27805677

Measurements within scale drawings are in mm.
Technical specifications and units of measure are subject to change.

Vernis Blend Overhead showers 1jet

Optional parts:		For	Finish	Code no.
	Vernis Blend Ceiling connector 10 cm	26271CHN	Chrome	27804007
			Matt Black	27804677
	Vernis Blend Shower arm 24 cm	26271CHN	Chrome	27809007
			Matt Black	27809677

Vernis Blend Overhead shower 200 1jet LowPressure

Features

- shower head size: 205 mm
- spray type: Rain
- ball-joint: overhead shower angle adjustable
- material spray disc: plastic
- flow rate (at 0,2 bar): 2,8 l/min
- function from: 5,7 l/min
- minimum flow pressure: 0.2 bar
- overhead shower removable for cleaning
- installation: ceiling or wall
- connection thread G ½
- connection dimension: DN15
- suitable for continous flow water heaters



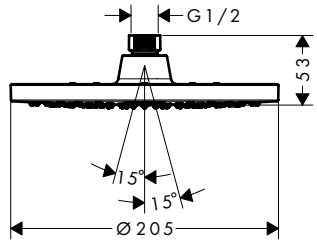

Technologies

Quick Clean · XXL Performance · Low Pressure

Spray types

Rain

Finish	Code no.
Chrome	26095000

Vernis Shape Overhead showers 1jet

Features of all variants

- shower head size: 230 x 170 mm
- spray type: Rain
- ball-joint: overhead shower angle adjustable
- material spray disc: plastic
- overhead shower removable for cleaning
- installation: ceiling or wall
- connection thread G ½
- connection dimension: DN15
- suitable for continous flow water heaters



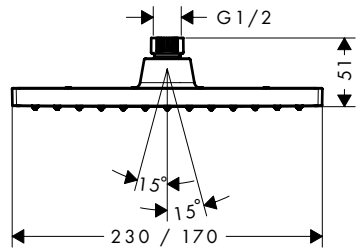

Sustainability

Eco Smart+ · EcoSmart

Technologies

Quick Clean · XXL Performance

Spray types

Rain

Certificates/declarations

EPD

Overview variants

Shower head size	Number of sprays	Spray types	Max. flow rate at 3 bar (l/min)	Min. flow pressure (bar)	Finish	Code no.
230	1	Rain	5.4	0.6	Chrome	26094000
230	1	Rain	8.7	0.6	Chrome	26283000
					Matt Black	26283670
230	1	Rain	12.4	0.6	Chrome	26281000
					Matt Black	26281670

For more information about this product, please see the next page.

Measurements within scale drawings are in mm.
Technical specifications and units of measure are subject to change.

Overhead showers

Vernis Shape Overhead showers 1jet

Overview variants

Shower head size	Number of sprays	Spray types	Max. flow rate at 3 bar (l/min)	Min. flow pressure (bar)	Finish	Code no.
230	1	Rain	11.2	1	Chrome	26281007
					Matt Black	26281677

Required parts (choose one):		For	Finish	Code no.
	Vernis Shape Shower arm 24 cm	26094XXX 26283XXX 26281XXX	Chrome	26405000
			Matt Black	26405670
	Vernis Shape Ceiling connector 10 cm	26094XXX 26283XXX 26281XXX	Chrome	26406000
			Matt Black	26406670
	Vernis Shape Ceiling connector 30 cm	26094XXX 26283XXX 26281XXX	Chrome	26407000
			Matt Black	26407670

Optional parts:		For	Finish	Code no.
	Vernis Blend Shower arm 24 cm	26281CHN	Chrome	27809007
			Matt Black	27809677
	Vernis Blend Ceiling connector 10 cm	26281CHN	Chrome	27804007
			Matt Black	27804677
	Vernis Blend Ceiling connector 30 cm	26281CHN	Chrome	27805007
			Matt Black	27805677

Vernis Shape Overhead shower 230 1jet LowPressure

Features

- shower head size: 230 x 170 mm
- spray type: Rain
- ball-joint: overhead shower angle adjustable
- material spray disc: plastic
- maximum flow rate at 3 bar: 14,7 l/min
- flow rate (at 0,2 bar): 2,8 l/min
- flow rate Rain spray (at 3 bar): 14,7 l/min
- function from: 5,7 l/min
- minimum flow pressure: 0.2 bar
- overhead shower removable for cleaning
- installation: ceiling or wall
- connection thread G ½
- connection dimension: DN15
- suitable for continous flow water heaters



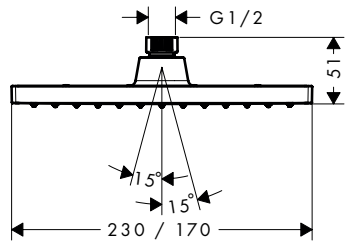

Technologies



Spray types



Finish	Code no.
Chrome	26096000

Optional parts:		Finish	Code no.
	Vernis Shape Shower arm 24 cm	Chrome	26405000
	Vernis Shape Ceiling connector 10 cm	Chrome	26406000
	Vernis Shape Ceiling connector 30 cm	Chrome	26407000

Measurements within scale drawings are in mm.
Technical specifications and units of measure are subject to change.

Clubmaster Overhead shower 90 3jet

Features

- shower head size: 93 mm
- spray type: Soft spray, normal spray, Massage spray
- adjustment with shift on overhead shower
- ball-joint: overhead shower angle adjustable
- material spray disc: plastic
- spray disc surface: grey
- maximum flow rate at 3 bar: 19 l/min
- flow rate soft spray (at 3 bar): 17 l/min
- flow rate normal spray (at 3 bar): 19 l/min
- flow rate massage spray (at 3 bar): 12 l/min
- minimum flow pressure: 2 bar
- installation: wall
- connection thread G ½
- connection dimension: DN15
- suitable for continous flow water heaters



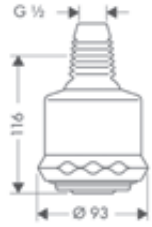

Technologies

Quick Clean

Spray types

Normal

Massage

Certificates/declarations

EPD

Finish	Code no.
Chrome	28496000

Optional parts:		Finish	Code no.
	Shower arm 12.8 cm	Chrome	27411000
	Shower arm 10 cm	Chrome	27438000

Measurements within scale drawings are in mm.
Technical specifications and units of measure are subject to change.

Accessories

Shower arms E

Features of all variants

· length: 390 mm · installation type: exposed installation · connection type: G ½

rectangular shaft



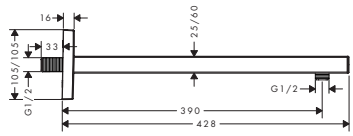

square shaft



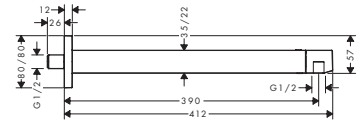

Overview variants

shaft	Length (mm)	Shape	Finish	Code no.
rectangular	390	square	Chrome	27694000
			Brushed Bronze	27694140
			Brushed Black Chrome	27694340
			Matt Black	27694670
			Matt White	27694700
			Polished Gold Optic	27694990
square	390	square	Chrome	24337000
			Brushed Bronze	24337140
			Matt Black	24337670
			Matt White	24337700

Pulsify Wall outlets

Features of all variants

· installation type: exposed installation
· connection type: G ½

for overhead shower 260



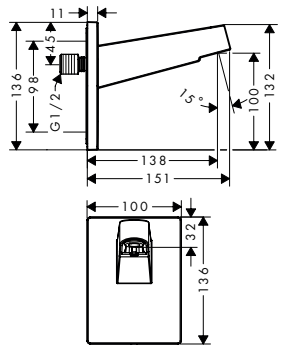

for overhead shower 105



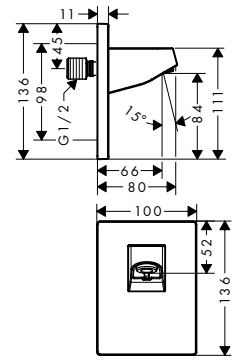

Overview variants

Suitable for	Finish	Code no.
overhead shower 260	Chrome	24149000
	Brushed Bronze	24149140
	Matt Black	24149670
	Matt White	24149700
overhead shower 105	Chrome	24139000
	Brushed Bronze	24139140
	Matt Black	24139670
	Matt White	24139700

Measurements within scale drawings are in mm.
Technical specifications and units of measure are subject to change.

Shower arm S 39 cm

Features

- length: 390 mm
- installation type: exposed installation
- material: brass/ plastic
- connection type: G ½



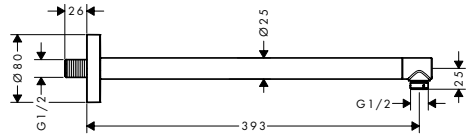

Finish	Code no.
Chrome	24357000
Brushed Bronze	24357140
Matt Black	24357670
Matt White	24357700

Shower arm 38.9 cm

Features

- length: 389 mm
- installation type: exposed installation
- material: brass
- version: 90° angle
- connection type: G ½



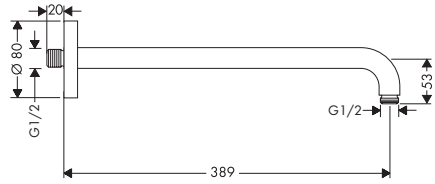

Finish	Code no.
Chrome	27413000
Brushed Bronze	27413140
Brushed Black Chrome	27413340
Matt Black	27413670
Matt White	27413700
Polished Gold Optic	27413990

Vernis Blend Shower arm 24 cm

Features

- length: 240 mm
- shaft Ø: 26 mm
- installation type: exposed installation
- material: brass
- version: 90° angle
- connection type: G ½



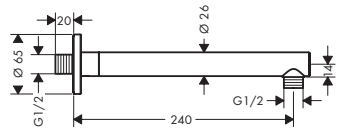

Finish	Code no.
Chrome	27809007
Matt Black	27809677

Measurements within scale drawings are in mm.
Technical specifications and units of measure are subject to change.

Accessories

Shower arm 10 cm

Features

- length: 100 mm
- installation type: exposed installation
- material: brass
- connection type: G ½



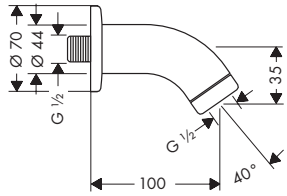

Finish	Code no.
Chrome	27438000

Optional parts:	Finish	Code no.
 Clubmaster Overhead shower 90 3jet	Chrome	28496000

Shower arms Standard

Features of all variants

- installation type: exposed installation
- material: brass
- connection type: G ½

230 mm



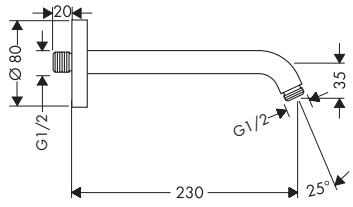

128 mm



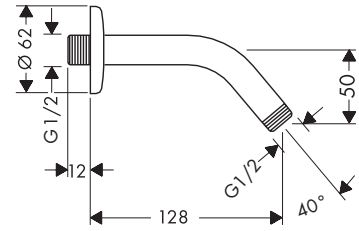

Overview variants

Length (mm)	Shape	Finish	Code no.
230	round	Chrome	27412000
		Brushed Bronze	27412140
		Brushed Gold Optic	27412250
		Polished Red Gold	27412300
		Brushed Red Gold	27412310
		Polished Black Chrome	27412330
		Brushed Black Chrome	27412340
		Stainless Steel Optic	27412800
		Brushed Nickel	27412820
		Brushed Brass	27412950
128	round	Chrome	27411000

Measurements within scale drawings are in mm.
Technical specifications and units of measure are subject to change.

Shower arm E 38.9 cm

Features

- length: 389 mm
- installation type: exposed installation
- material: brass
- version: 90° angle
- connection type: G ½



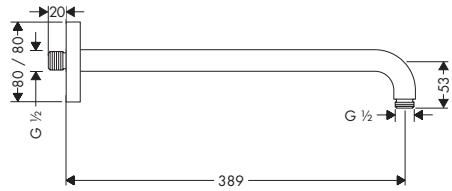

Finish	Code no.
Chrome	27446000

Vernis Shape Shower arms

Features of all variants

- length: 240 mm
- shaft Ø: 26 mm
- installation type: exposed installation
- material: brass
- version: 90° angle
- connection type: G ½



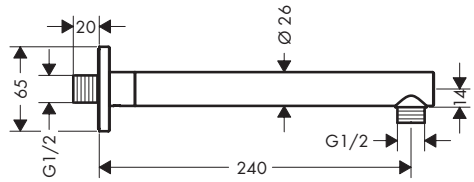

Overview variants

Length (mm)	Shape	Finish	Code no.
240	square	Chrome	26405000
		Matt Black	26405670
240	square	Matt Black	26405677

Ceiling connectors E

Features of all variants

- installation type: concealed installation
- material: brass/ plastic
- connection type: G ½
- ceiling connector not extendable, ceiling connector not shortenable

300 mm



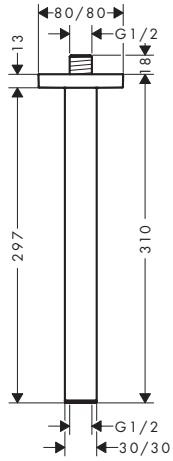

100 mm



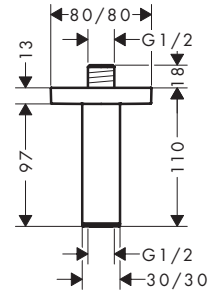

For more information about this product, please see the next page.

Measurements within scale drawings are in mm.
Technical specifications and units of measure are subject to change.

Accessories

Ceiling connectors E

Overview variants

Length (mm)	Shape	Finish	Code no.
300	square	Chrome	24339000
		Brushed Bronze	24339140
		Matt Black	24339670
		Matt White	24339700
100	square	Chrome	24338000
		Brushed Bronze	24338140
		Matt Black	24338670
		Matt White	24338700

Ceiling connectors S

Features of all variants

- shaft Ø: 27 mm
- installation type: exposed installation
- material: brass
- connection type: G ½

300 mm



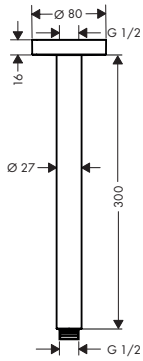

100 mm



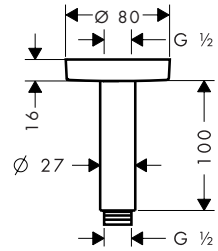

Overview variants

Length (mm)	Shape	Finish	Code no.
300	round	Chrome	27389000
		Brushed Bronze	27389140
		Brushed Black Chrome	27389340
		Matt Black	27389670
		Matt White	27389700
		Polished Gold Optic	27389990
100	round	Chrome	27393000
		Brushed Bronze	27393140
		Brushed Black Chrome	27393340
		Matt Black	27393670
		Matt White	27393700
		Polished Gold Optic	27393990

Measurements within scale drawings are in mm.
Technical specifications and units of measure are subject to change.

Vernis Blend Ceiling connectors

Features of all variants

- shaft Ø: 26 mm
- installation type: exposed installation
- material: brass
- connection type: NPT ½

300 mm



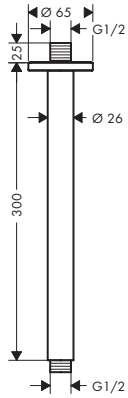

100 mm



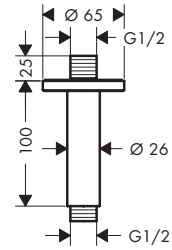

Overview variants

Length (mm)	Shape	Finish	Code no.
300	round	Chrome	27805007
		Matt Black	27805677
100	round	Chrome	27804007
		Matt Black	27804677

Ceiling connectors Q

Features of all variants

- shaft Ø: 27 mm
- installation type: exposed installation
- material: brass
- connection type: G ½

300 mm



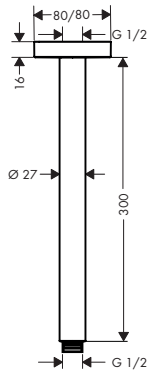

100 mm



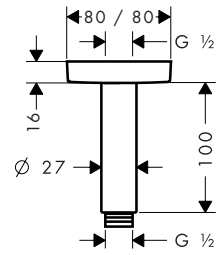

Overview variants

Length (mm)	Shape	Finish	Code no.
300	square	Chrome	27388000
100	square	Chrome	27467000

Measurements within scale drawings are in mm.
Technical specifications and units of measure are subject to change.

Vernis Shape Ceiling connectors

Features of all variants

- shaft Ø: 26 mm
- installation type: exposed installation
- material: brass
- connection type: G ½

300 mm



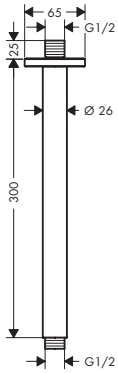

100 mm



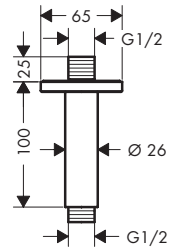

Overview variants

Length (mm)	Shape	Finish	Code no.
300	square	Chrome	26407000
		Matt Black	26407670
100	square	Chrome	26406000
		Matt Black	26406670
300	square	Matt Black	26407677
100	square	Matt Black	26406677

Measurements within scale drawings are in mm.
Technical specifications and units of measure are subject to change.

Rainfinity Shoulder shower 500 1jet with shower shelf

Features

- shower head size: 502 x 80 mm
- spray type: PowderRain
- spray area: 309 x 28 mm
- field of application: functions as overhead, shoulder or side shower
- maximum flow rate at 3 bar: 14,5 l/min
- flow rate PowderRain spray (at 3 bar): 14,5 l/min
- minimum flow pressure: 1,1 bar
- operating pressure: min. 1,1 bar/max. 10 bar
- connection thread: G ½
- connection dimension: DN15
- material: metal
- shelf made of safety glass
- surface shelf: graphite



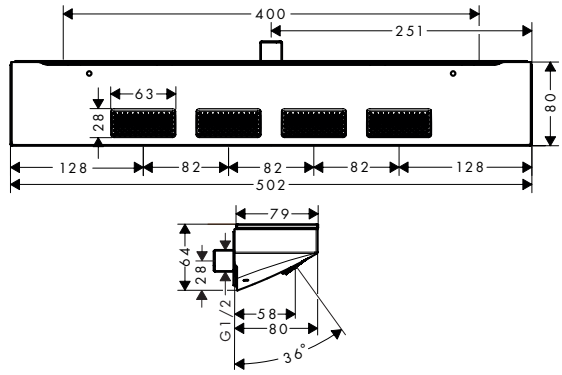

Technologies

Quick Clean · XXL Performance

Spray types

Powder Rain

Certificates/declarations

EPD

Finish	Code no.
Chrome	26243000
Brushed Bronze	26243140
Brushed Black Chrome	26243340
Matt Black	26243670
Matt White	26243700
Polished Gold Optic	26243990

26243000 Surface shelf: mirror glass.

Bodyvette Body shower 1jet

Features

- shower head size: 60 mm
- spray type: Rain
- spray disc surface: grey
- side shower angle adjustable
- rosette: circular
- maximum flow rate at 3 bar: 5 l/min
- flow rate Rain spray (at 3 bar): 5 l/min
- minimum flow pressure: 1,4 bar
- operating pressure: min. 0.14 MPa/max. 0.6 MPa
- connection thread: G ½
- suitable for continous flow water heaters
- connection dimension: DN15
- material: metal
- EU taxonomy: max. 6 l/min - Substantial Contribution (SC) possible



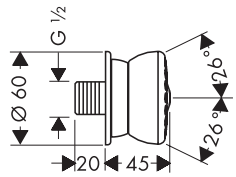

Sustainability

Eco Smart+

Technologies

Quick Clean

Spray types

Rain

Finish	Code no.
Chrome	28466000



Showerpipes and shower panels

Showerpipes and shower panels

Rainfinity Showerpipes 1jet with thermostat

Features of all variants

- consists of: overhead shower, hand shower, shower thermostat, shower hose, slider, shower bar
- spray type overhead shower: PowderRain
- spray disc surface: graphite
- spray type hand shower: PowderRain, Intense PowderRain, MonoRain
- max. operating pressure: 10 bar
- ball-joint: overhead shower angle adjustable
- bar width: 61 mm
- CoolContact thermostat: Prevents the housing from heating up, making showering even safer
- thermostat ShowerTablet 350
- safety stop at 40 °C
- adjustable hot water limitation
- outlets controlled via turning handle
- will not run two outlets at same time
- suitable for continuous flow water heaters
- mounting type: exposed installation
- connection dimension DN15
- connection thread G ½
- centre distance 150 ± 12 mm
- intrinsically safe against backflow
- 2 functions
- material front of thermostat and pipe: safety glass

360

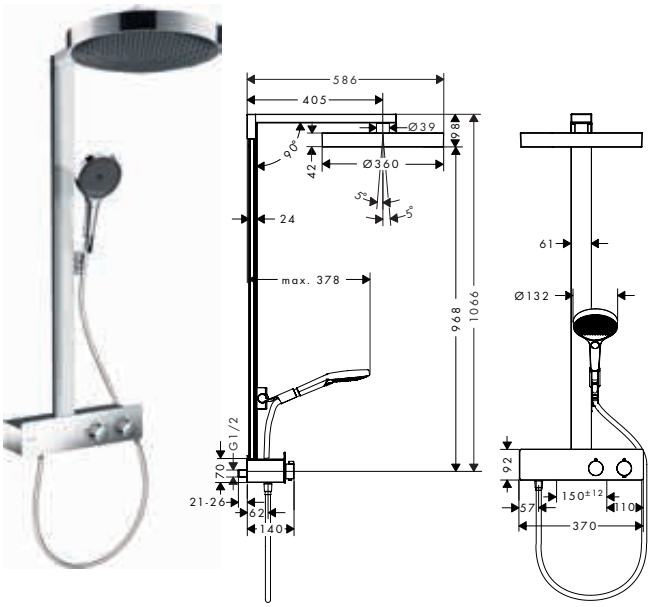

250

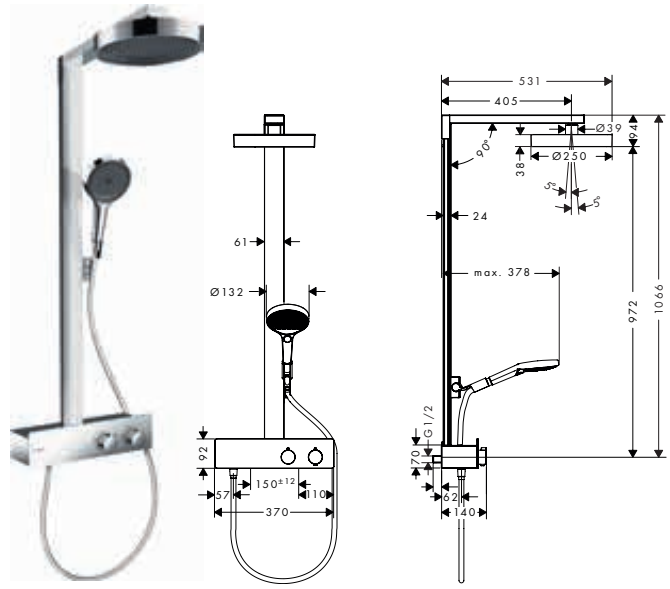

Sustainability

EcoSmart

Technologies

Select · Cool Contact · Quick Clean · XXL Performance

Spray types

Powder Rain · Intense Powder Rain · Mono Rain

Overview variants

Shower head size	Number of sprays	Spray types	Max. flow rate at 3 bar (l/min)	Min. flow pressure (bar)	Finish	Code no.
360	1	PowderRain	15.9	2	Chrome	26853000
					Matt Black	26853670
					Matt White	26853700
250	1	PowderRain	8.2	1	Chrome	28742000
					Matt Black	28742670
					Matt White	28742700

Consisting of:		Included in	Code no.
	Rainfinity Hand shower 130 3jet EcoSmart	26853XXX	26865XXX

Measurements within scale drawings are in mm.
Technical specifications and units of measure are subject to change.

Rainfinity Showerpipe 360 1jet for concealed installation

Features

- consists of: overhead shower, hand shower, shower holder, shower hose, 2 glass shelves, shower bar
- overhead shower Rainfinity 360 1jet
- shower head size overhead shower: 360 mm
- spray type overhead shower: PowderRain
- spray disc surface: graphite
- requires a mixer for 2 functions
- spray type hand shower: MonoRain, PowderRain, Intense PowderRain
- flow rate of hand shower at 3 bar: 11,2 l/min
- maximum flow rate for Showerpipe at 3 bar: 19,6 l/min
- minimum flow pressure: 2,4 bar
- max. operating pressure: 6 bar
- shower holder inclination angle can be adjusted continously
- shower arm vertically inclinable by 10-30°
- shelf made of safety glass
- surface shelf: graphite
- mounting type: concealed
- bar width: 22 mm
- isolated water conduction
- water connection: in the lower shelf, covert
- connection dimension: DN15
- connection thread G ½



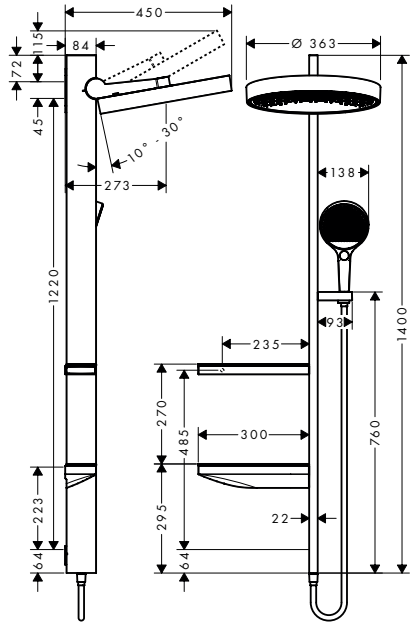

Technologies



Spray types



Finish	Code no.
Chrome	26842000
Matt White	26842700

26842000 Surface shelf: mirror glass.

Consisting of:	Included in	Code no.
Rainfinity Hand shower 130 3jet	26842XXX	26864XXX
Isiflex Shower hose 160 cm	26842XXX	28276XXX

Required parts:	Code no.
Rainfinity Basic set for showerpipe 360 1jet for concealed installation	26840180

Optional parts:	Finish	Code no.
RainSelect Thermostat for concealed installation for 2 functions	Chrome	15380000
	Matt White	15380700
RainSelect Basic set for 2 functions		15310180

Measurements within scale drawings are in mm.
Technical specifications and units of measure are subject to change.

Rainmaker Select Showerpipes 3jet, 2jet with thermostat

Features of all variants

- consists of: overhead shower, hand shower, shower thermostat, shower hose, shower holder, shower bar
- shower head size overhead shower: 460 x 300 mm
- convenient spray selection via Select button
- spray disc surface: easy cleanable spray disc in glass optics
- removable shower head
- shelf made of safety glass
- surface shelf: white
- spray type hand shower: Rain, RainAir, Whirl
- minimum flow pressure: 1,5 bar
- max. operating pressure: 10 bar
- bar width: 80 mm
- shower arm length overhead shower: 450 mm
- CoolContact thermostat: Prevents the housing from heating up, making showering even safer
- thermostat ShowerTablet Select 700
- safety stop at 40 °C
- adjustable hot water limitation
- convenient diversion via Select button
- suitable for continuous flow water heaters
- mounting type: exposed installation
- connection dimension DN15
- connection thread G ½
- centre distance 150 ± 18 mm
- intrinsically safe against backflow
- 2 functions

3 spray types



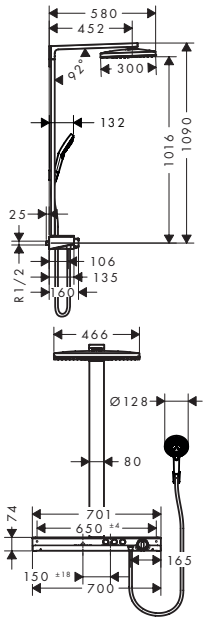

2 spray types



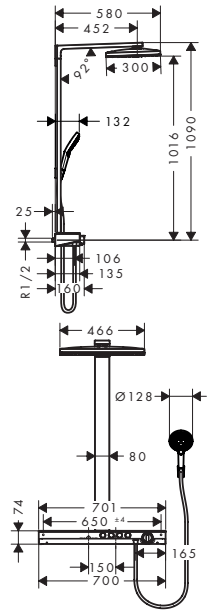

Sustainability

EcoSmart

Technologies

Select · Cool Contact · Quick Clean · XXL Performance

Spray types

Rain Air · Rain · Whirl · Mono Rain · Rain Stream

Overview variants

Shower head size	Number of sprays	Spray types	Max. flow rate at 3 bar (l/min)	Min. flow pressure (bar)	Finish	Code no.
460	3	Rain, MonoRain, RainStream	27	1.5	White/Chrome	27106400
460	2	Rain, RainStream	9	1.5	White/Chrome	27028400
460	2	Rain, RainStream	27	1.5	White/Chrome	27109400

Consisting of:		Included in	Code no.
	Raindance Select S Hand shower 120 3jet	27106400 27109400	26530400
	Isiflex Shower hose 160 cm	27106400 27028400 27109400	28276000
	Shower holder Porter S	27106400 27028400 27109400	28331000

Measurements within scale drawings are in mm.
Technical specifications and units of measure are subject to change.

Raindance Select S Showerpipes 2jet, 1jet with thermostat

Features of all variants

- consists of: overhead shower, hand shower, shower thermostat, shower hose, slider, shower bar
- minimum flow pressure: 1,5 bar
- max. operating pressure: 10 bar
- pipe can be shortened in height
- height-adjustable hand shower holder
- swivel shower arm
- thermostat Ecostat Comfort
- safety stop at 40 °C
- adjustable hot water limitation
- outlets controlled via turning handle
- suitable for continuous flow water heaters
- mounting type: exposed installation
- connection dimension DN15
- connection thread G ½
- centre distance 150 ± 12 mm
- intrinsically safe against backflow
- 2 functions

300



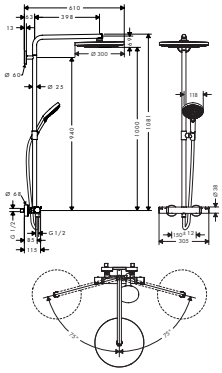

240



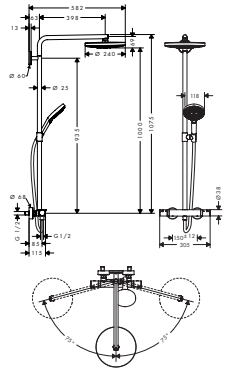

240 PowderRain



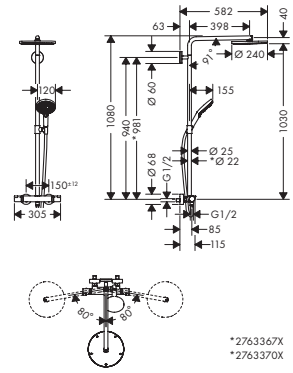

Technologies



Spray types



Certificates/declarations

EPD

Overview variants

Shower head size	Number of sprays	Spray types overhead shower	Spray types hand shower	Max. flow rate at 3 bar (l/min)	Min. flow pressure (bar)	Finish	Code no.
300	2	RainAir, Rain	RainAir, Rain, Whirl	15	1.5	White/Chrome	27133400
240	2	RainAir, Rain	RainAir, Rain, Whirl	15	1.5	Chrome	27129000
						White/Chrome	27129400
240	1	PowderRain	PowderRain, Rain, Whirl	16	1.5	Chrome	27633000
						Brushed Bronze	27633140
						Brushed Black Chrome	27633340
						Matt Black	27633670
						Matt White	27633700
						Polished Gold Optic	27633990

27129400
27133400 Spray disc surface: white.

Consisting of:		Included in	Code no.
	Raindance Select S Hand shower 120 3jet	27133400 27129XXX	26530XXX
	Raindance Select S Hand shower 120 3jet PowderRain	27633XXX	26014XXX

For more information about this product, please see the next page.

Measurements within scale drawings are in mm.
Technical specifications and units of measure are subject to change.

Raindance Select S Showerpipes 2jet, 1jet with thermostat

Consisting of:		Included in	Code no.
	Isiflex Shower hose 160 cm	27633XXX 27133400 27129XXX	28276XXX

Optional parts:		Finish	Code no.
	Wall bar spacer for Croma 100 Showerpipe	Chrome	95239000

Raindance Select S Showerpipe 240 1jet PowderRain with bath thermostat

Features

- consists of: overhead shower, hand shower, shower thermostat, shower hose, slider
- overhead shower Raindance S240 P
- shower head size overhead shower: 236 mm
- spray type overhead shower: PowderRain
- flow rate PowderRain spray (at 3 bar): 12 l/min
- spray type hand shower: PowderRain, Rain, Whirl
- maximum flow rate for Showerpipe at 3 bar: 12 l/min
- minimum flow pressure: 1,5 bar
- max. operating pressure: 10 bar
- shower bar diameter: 22 mm
- height-adjustable hand shower holder
- shower arm length overhead shower: 460 mm
- swivel shower arm
- thermostat Ecostat Comfort
- safety stop at 40 °C
- adjustable hot water limitation
- outlets controlled via turning handle
- suitable for continuous flow water heaters
- mounting type: exposed installation
- connection dimension DN15
- connection thread G ½
- centre distance 150 ± 12 mm
- intrinsically safe against backflow
- 3 functions



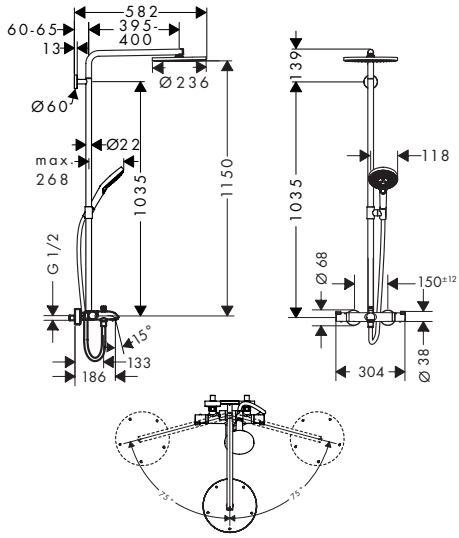

Technologies



Spray types



Certificates/declarations

EPD

Finish	Code no.
Chrome	27670007
Brushed Bronze	27670147
Brushed Black Chrome	27670347
Matt Black	27670677
Matt White	27670707
Polished Gold Optic	27670997

Optional parts:		Finish	Code no.
	Wall bar spacer	Chrome	98681000

Measurements within scale drawings are in mm.
Technical specifications and units of measure are subject to change.

Raindance S Showerpipes 1jet with thermostat

Features of all variants

- spray type overhead shower: RainAir
- ball-joint: overhead shower angle adjustable
- thermostat Ecostat Comfort
- safety stop at 40 °C
- adjustable hot water limitation
- outlets controlled via turning handle
- suitable for continuous flow water heaters
- mounting type: exposed installation
- connection dimension DN15
- connection thread G ½
- centre distance 150 ± 12 mm
- intrinsically safe against backflow
- 2 functions

300

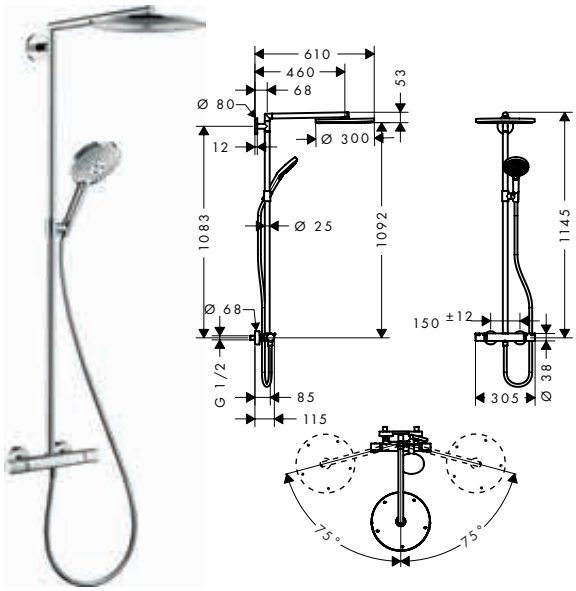

240

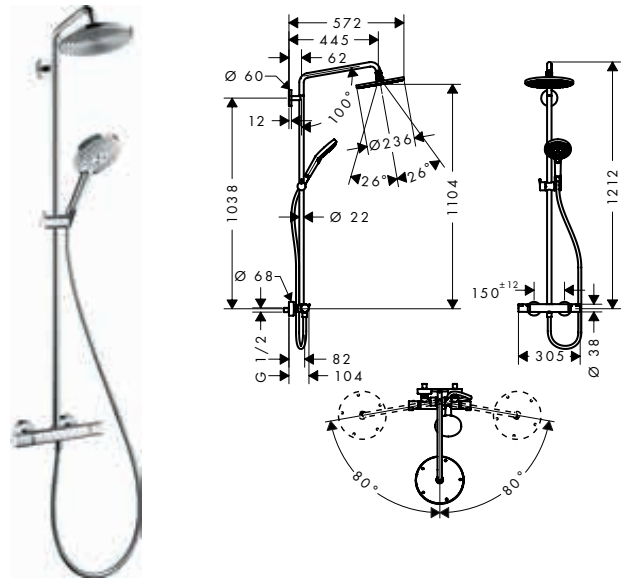

Sustainability

EcoSmart

Technologies

Select · Quick Clean · AirPower · XXL Performance

Spray types

Rain Air · Rain · Whirl

Certificates/declarations

EPD

Overview variants

Shower head size	Number of sprays	Spray types	Max. flow rate at 3 bar (l/min)	Min. flow pressure (bar)	Finish	Code no.
300	1	RainAir	16	2	Chrome	27114000
240	1	RainAir	9	2	Chrome	27116000
240	1	RainAir	9.3	2.7	Chrome	26167007

Consisting of:		Included in	Code no.
	Raindance Select S Hand shower 120 3jet	27114000	26530000
	Raindance Select S Hand shower 120 3jet EcoSmart 9 l/min	27116000	26531000
	Isiflex Shower hose 160 cm	27114000 27116000	28276000

Optional parts:		For	Finish	Code no.
	Wall bar spacer	27114XXX	Chrome	98681000
	Wall bar spacer for Croma 100 Showerpipe	27116XXX	Chrome	95239000

Measurements within scale drawings are in mm.
Technical specifications and units of measure are subject to change.

Raindance S Showerpipes 1jet with bath thermostat

Features of all variants

- overhead shower Raindance S 240 Air
- shower head size overhead shower: 236 mm
- spray type overhead shower: RainAir
- spray type hand shower: Rain, RainAir, Whirl
- ball-joint: overhead shower angle adjustable
- thermostat Ecostat Comfort
- safety stop at 40 °C
- adjustable hot water limitation
- outlets controlled via turning handle
- suitable for continuous flow water heaters
- mounting type: exposed installation
- connection dimension DN15
- connection thread G ½
- centre distance 150 ± 12 mm
- intrinsically safe against backflow
- 3 functions





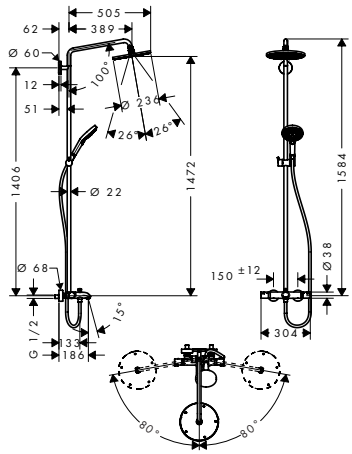

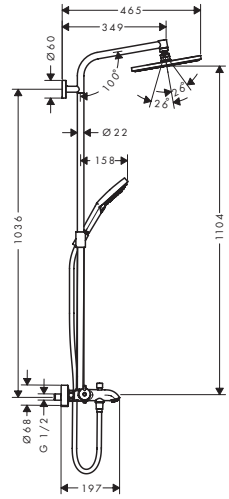

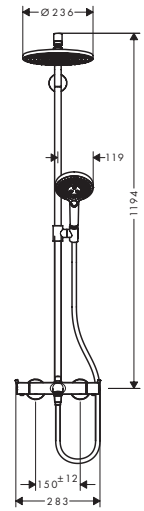

Technologies

Select · Quick Clean · AirPower · XXL Performance

Spray types

Rain Air · Rain · Whirl

Certificates/declarations

EPD

Overview variants

Shower head size	Number of sprays	Spray types	Min. flow pressure (bar)	flow rate of hand shower at 3 bar (l/min)	flow rate for bath spout at 3 bar (l/min)	Thermostat	Finish	Code no.
240	1	RainAir	1	15.5		Ecostat Comfort	Chrome	27117000
240	1	RainAir	2.7	9.6	19.1	Ecostat Comfort	Chrome	26166007

Consisting of:		Included in	Code no.
	Raindance Select S Hand shower 120 3jet	27117000	26530000
	Isiflex Shower hose 160 cm	27117000	28276000

Optional parts:		For	Finish	Code no.
	Wall bar spacer for Croma 100 Showerpipe	27117XXX	Chrome	95239000

Measurements within scale drawings are in mm.
Technical specifications and units of measure are subject to change.

Raindance Select E Showerpipes 3jet, 2jet with thermostat

Features of all variants

- convenient spray selection via Select button
- spray disc surface: chrome
- shelf made of safety glass
- surface shelf: mirror glass
- spray type hand shower: RainAir, Rain, Whirl
- minimum flow pressure: 2 bar
- max. operating pressure: 10 bar
- bar width: 40 mm
- shower arm length overhead shower: 380 mm
- CoolContact thermostat: Prevents the housing from heating up, making showering even safer
- thermostat ShowerTablet Select 300
- safety stop at 40 °C
- adjustable hot water limitation
- convenient diversion via Select button
- suitable for continuous flow water heaters
- mounting type: exposed installation
- connection dimension DN15
- connection thread G ½
- centre distance 150 ± 12 mm
- intrinsically safe against backflow
- in case of installation on existing G ¾ connections, adaptor no.02026000 must be used
- 2 functions

3 spray types



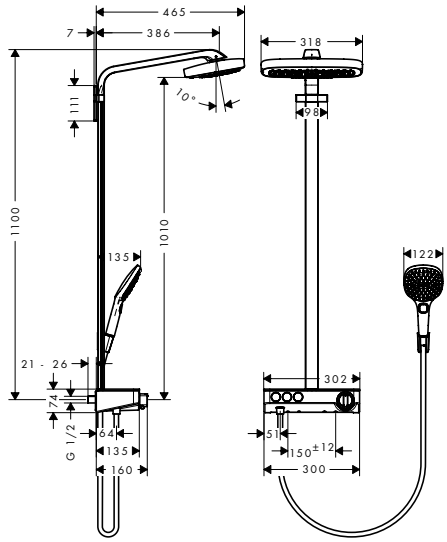

2 spray types



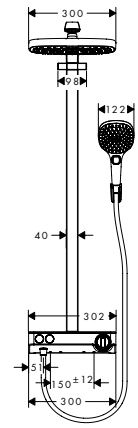

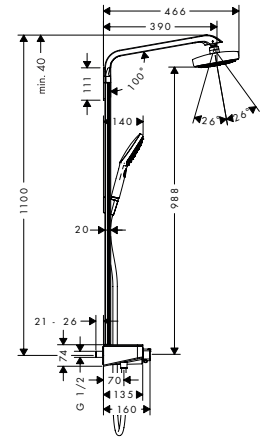

Sustainability

EcoSmart

Technologies

Select · Cool Contact · Quick Clean · AirPower · XXL Performance

Spray types

Rain Air · Rain · Whirl · Rain Stream

Certificates/ declarations

EPD

Overview variants

Shower head size	Thermostat	Number of sprays	Spray types	Max. flow rate at 3 bar (l/min)	Min. flow pressure (bar)	Select	Finish	Code no.
300	ShowerTablet Select 300	3	RainAir, Rain, RainStream	19	2	■	Chrome	27127000
							White/Chrome	27127400
300	ShowerTablet Select 300	2	RainAir, Rain	8.5	2	■	Chrome	27283000

27127400	Spray disc surface: white.
27127400	Surface shelf: white glass.

Consisting of:	Included in	Code no.
Raindance Select E Hand shower 120 3jet	27127XXX	26520XXX
Raindance Select E Hand shower 120 3jet EcoSmart	27283000	26521000
Isiflex Shower hose 160 cm	27127XXX 27283000	28276000
Shower holder Porter S	27127XXX 27283000	28331000

Optional parts:	For	Finish	Code no.
S-connections adapter G ¾ for renovation		Chrome	02026000
Wall bar spacer for Raindance Select	27127XXX	Chrome	95960000

Measurements within scale drawings are in mm.
Technical specifications and units of measure are subject to change.

Raindance E Showerpipes 1jet with thermostat

Features of all variants

- consists of: overhead shower, hand shower, shower thermostat, shower hose, shower holder, shower bar
- overhead shower Raindance E 360 Air
- shower head size overhead shower: 360 x 190 mm
- spray type overhead shower: RainAir
- shelf made of safety glass
- surface shelf: mirror glass
- spray type hand shower: RainAir, Rain, Whirl
- minimum flow pressure: 1 bar
- max. operating pressure: 10 bar
- ball-joint: overhead shower angle adjustable
- bar width: 44 mm
- shower arm length overhead shower: 380 mm
- thermostat Ecostat Select
- safety stop at 40 °C
- adjustable hot water limitation
- outlets controlled via turning handle
- suitable for continuous flow water heaters
- mounting type: exposed installation
- connection dimension DN15
- connection thread G ½
- centre distance 150 ± 12 mm
- intrinsically safe against backflow
- pipe length: 1066 mm
- in case of installation on existing G ¾ connections, adaptor no.02026000 must be used
- 2 functions



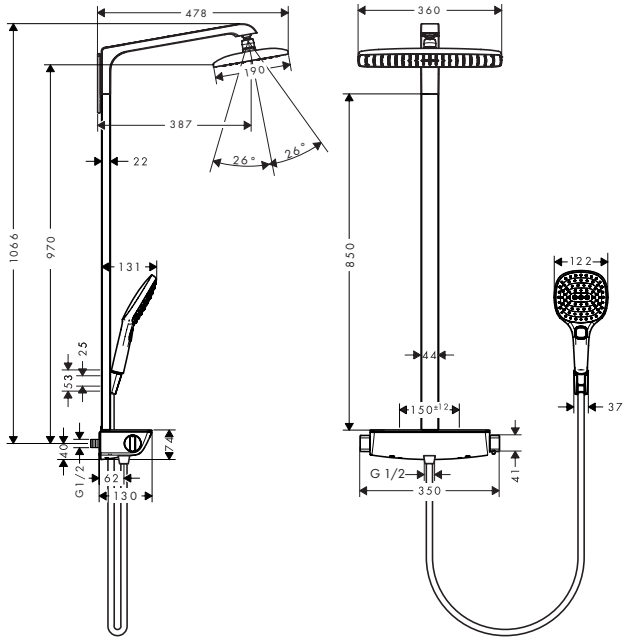

Sustainability

EcoSmart

Technologies

Select · Cool Contact · Quick Clean · AirPower · XXL Performance

Spray types

Rain Air · Rain · Whirl

Certificates/declarations

EPD

Overview variants

Shower head size	Number of sprays	Spray types	Max. flow rate at 3 bar (l/min)	Min. flow pressure (bar)	Finish	Code no.
360	1	RainAir	9	1	Chrome	27286000
					White/Chrome	27286400
360	1	RainAir	15	1	Chrome	27112000
					White/Chrome	27112400

27112400
27286400 Surface shelf: white glass.

Consisting of:		Included in	Code no.
	Raindance Select E Hand shower 120 3jet EcoSmart	27286XXX	26521XXX
	Raindance Select E Hand shower 120 3jet	27112XXX	26520XXX
	Isiflex Shower hose 160 cm	27286XXX 27112XXX	28276000
	Shower holder Porter S	27286XXX 27112XXX	28331000

Optional parts:		Finish	Code no.
	S-connections adapter G ¾ for renovation	Chrome	02026000
	Wall bar spacer for Raindance Select	Chrome	95960000

Measurements within scale drawings are in mm.
Technical specifications and units of measure are subject to change.

Raindance E Showerpipe 360 1jet with bath thermostat

Features

- consists of: overhead shower, hand shower, bath thermostat, shower hose, shower holder
- overhead shower Raindance E 360 Air
- shower head size overhead shower: 360 x 190 mm
- spray type overhead shower: RainAir
- shelf made of safety glass
- surface shelf: mirror glass
- flow rate RainAir spray (at 3 bar): 15 l/min
- spray type hand shower: RainAir, Rain, Whirl
- maximum flow rate for Showerpipe at 3 bar: 20 l/min
- minimum flow pressure: 1,3 bar
- max. operating pressure: 10 bar
- ball-joint: overhead shower angle adjustable
- bar width: 44 mm
- shower arm length overhead shower: 380 mm
- CoolContact thermostat: Prevents the housing from heating up, making showering even safer
- thermostat Ecostat Select
- safety stop at 40°C
- adjustable hot water limitation
- outlets controlled via turning handle
- suitable for continuous flow water heaters
- mounting type: exposed installation
- connection dimension DN15
- connection thread G ½
- centre distance 150 ± 12 mm
- intrinsically safe against backflow
- pipe length: 1400 mm
- in case of installation on existing G ¾ connections, adaptor no.02026000 must be used
- 3 functions



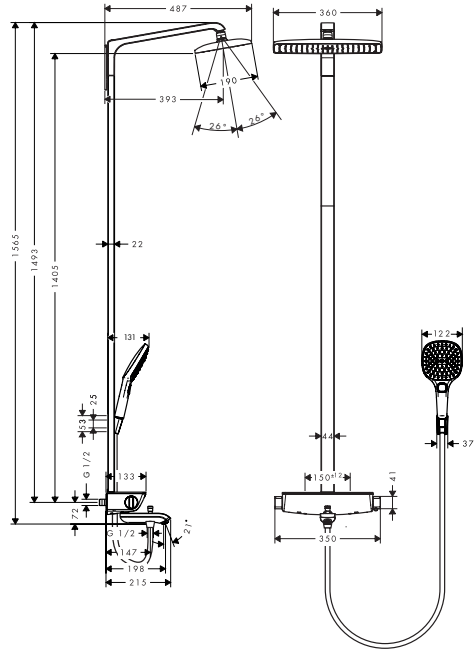

Technologies

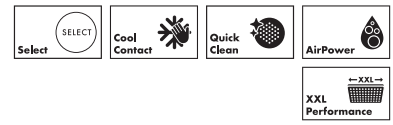

Spray types



Finish	Code no.
Chrome	27113000
White/Chrome	27113400

27113400	Surface shelf: white glass.

Consisting of:		Included in	Code no.
	Raindance Select E Hand shower 120 3jet	27113XXX	26520XXX
	Isiflex Shower hose 160 cm	27113XXX	28276000
	Shower holder Porter S	27113XXX	28331000

Optional parts:		Finish	Code no.
	Wall bar spacer for Raindance Select	Chrome	95960000
	S-connections adapter G ¾ for renovation	Chrome	02026000

Measurements within scale drawings are in mm.
Technical specifications and units of measure are subject to change.

Raindance E Showerpipe 360 1jet with bath thermostat

Features

- consists of: overhead shower, hand shower, bath thermostat, shower hose, slider
- overhead shower Raindance E 360 Air
- shower head size overhead shower: 360 x 190 mm
- spray type overhead shower: RainAir
- flow rate of hand shower at 3 bar: 10 l/min
- maximum flow rate for Showerpipe at 3 bar: 21,2 l/min
- max. operating pressure: 6 bar
- ball-joint: overhead shower angle adjustable
- shower arm length overhead shower: 390 mm
- thermostat Ecostat Comfort
- safety stop at 40 °C
- adjustable hot water limitation
- outlets controlled via turning handle
- suitable for continuous flow water heaters
- mounting type: exposed installation
- connection dimension DN15
- connection thread G ½
- centre distance 150 ± 12 mm
- intrinsically safe against backflow
- pipe length: 1035 mm
- 3 functions



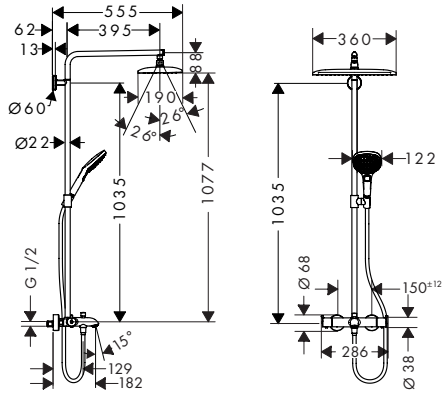

Technologies

Select · Quick Clean · AirPower · XXL Performance

Spray types

Rain Air

Certificates/declarations

EPD

Finish	Code no.
Chrome	26162007

Raindance E Showerpipe 360 1jet with ShowerTablet Select 300

Features

- consists of: overhead shower, hand shower, shower thermostat, shower hose, shower holder, shower bar
- overhead shower Raindance E 360 Air
- shower head size overhead shower: 360 x 190 mm
- spray type overhead shower: RainAir
- shelf made of safety glass
- surface shelf: mirror glass
- spray type hand shower: RainAir, Rain, Whirl
- maximum flow rate for Showerpipe at 3 bar: 16,9 l/min
- minimum flow pressure: 0,8 bar
- max. operating pressure: 5 bar
- ball-joint: overhead shower angle adjustable
- bar width: 40 mm
- shower arm length overhead shower: 380 mm
- CoolContact thermostat: Prevents the housing from heating up, making showering even safer
- thermostat ShowerTablet Select 300
- safety stop at 40 °C
- adjustable hot water limitation
- convenient diversion via Select button
- suitable for continuous flow water heaters
- mounting type: exposed installation
- connection dimension DN15
- connection thread G ½
- centre distance 150 ± 12 mm
- intrinsically safe against backflow
- in case of installation on existing G ¾ connections, adaptor no.02026000 must be used
- 2 functions



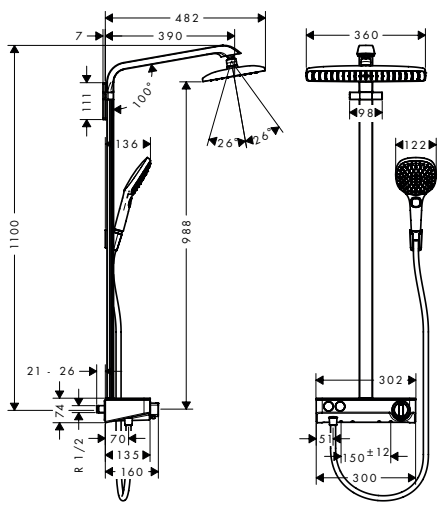

Technologies

Select · Cool Contact · Quick Clean · AirPower · XXL Performance

Spray types

Rain Air · Rain · Whirl

Certificates/declarations

EPD

Finish	Code no.
Chrome	27288000
White/Chrome	27288400

27288400	Surface shelf: white glass.

Consisting of:	Included in	Code no.
Raindance Select E Hand shower 120 3jet	27288XXX	26520XXX

Measurements within scale drawings are in mm.
Technical specifications and units of measure are subject to change.

Raindance E Showerpipe 360 1jet with ShowerTablet Select 300

Consisting of:		Included in	Code no.
	Raindance E Overhead shower 360 1jet with ceiling connector	27288XXX	27381000
	Isiflex Shower hose 160 cm	27288XXX	28276000
	Shower holder Porter S	27288XXX	28331000

Optional parts:		Finish	Code no.
	S-connections adapter G ¾ for renovation	Chrome	02026000

Raindance E Showerpipes 1jet with thermostat

Features of all variants

- overhead shower Raindance E 300 Air 1jet
- shower head size overhead shower: 300 x 300 mm
- spray type overhead shower: RainAir
- surface shelf: aluminium anodized
- spray type hand shower: RainAir, Rain, Whirl
- minimum flow pressure: 1,5 bar
- max. operating pressure: 10 bar
- 90° position adjustable hand shower holder, pivots left and right, up and down
- bar width: 61 mm
- shower arm length overhead shower: 405 mm
- CoolContact thermostat: Prevents the housing from heating up, making showering even safer
- safety stop at 40 °C
- adjustable hot water limitation
- outlets controlled via turning handle
- will not run two outlets at same time
- suitable for continuous flow water heaters
- mounting type: exposed installation
- connection dimension DN15
- connection thread G ½
- centre distance 150 ± 12 mm
- intrinsically safe against backflow
- pipe length: 1000 mm
- 2 functions

ShowerTablet 600



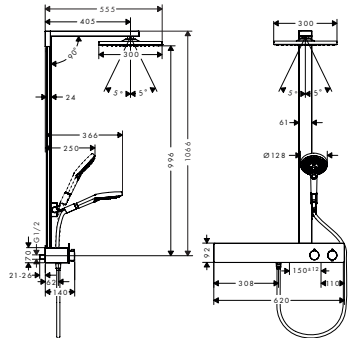

ShowerTablet 350



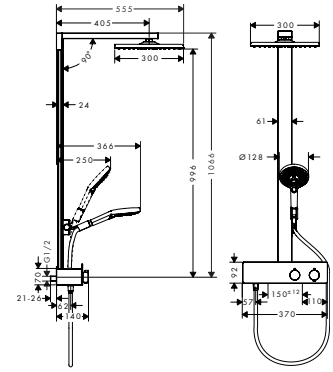

Sustainability

EcoSmart

Technologies

Select · Cool Contact · Quick Clean · AirPower · XXL Performance

Spray types

Rain Air · Rain · Whirl

Certificates/declarations

EPD

Overview variants

Shower head size	Thermostat	Number of sprays	Spray types	Max. flow rate at 3 bar (l/min)	Min. flow pressure (bar)	Select	Finish	Code no.
300	ShowerTablet 600	1	RainAir	9	1.5	■	Chrome	27364000
300	ShowerTablet 600	1	RainAir	16	1.5	■	Chrome	27363000
300	ShowerTablet 350	1	RainAir	9	1.5	■	Chrome	27362000
300	ShowerTablet 350	1	RainAir	16	1.5	■	Chrome	27361000

Consisting of:		Included in	Code no.
	Raindance Select S Hand shower 120 3jet EcoSmart 9 l/min	27364000 27362000	26531000
	Raindance Select S Hand shower 120 3jet	27363000 27361000	26530000
	Isiflex Shower hose 160 cm	27364000 27363000 27362000 27361000	28276000

For more information about this product, please see the next page.

Measurements within scale drawings are in mm.
Technical specifications and units of measure are subject to change.

Raindance E Showerpipes 1jet with thermostat

Optional parts:		For	Finish	Code no.
	Casetta Soap dish/ shelf E	27363XXX 27361XXX	Chrome	26511000

Pulsify S Showerpipes 2jet with thermostat

Features of all variants

- consists of: overhead shower, hand shower, shower thermostat, shower bar, shower hose
- overhead shower Pulsify 260 2jet
- shower head size overhead shower: 260 mm
- spray type overhead shower: PowderRain, Intense PowderRain
- spray disc surface: graphite
- Fast Drain empties the overhead shower from an angle of 10°
- removable shower head
- shelf made of plastic
- surface shelf: graphite
- spray type hand shower: PowderRain, IntenseRain, Massage spray
- ball-joint: overhead shower inclinable by 13-39°
- pipe can be shortened in height
- bar width: 48 mm
- shower arm length overhead shower: 233 mm
- CoolContact thermostat: Prevents the housing from heating up, making showering even safer
- thermostat ShowerTablet Select 400
- simultaneous utilization of 3 functions
- suitable for continuous flow water heaters
- mounting type: exposed installation
- connection thread G ½
- centre distance 150 ± 12 mm
- intrinsically safe against backflow
- Thermostat is delivered with buttons hand shower, PowderRain, Intense PowderRain
- 2 functions



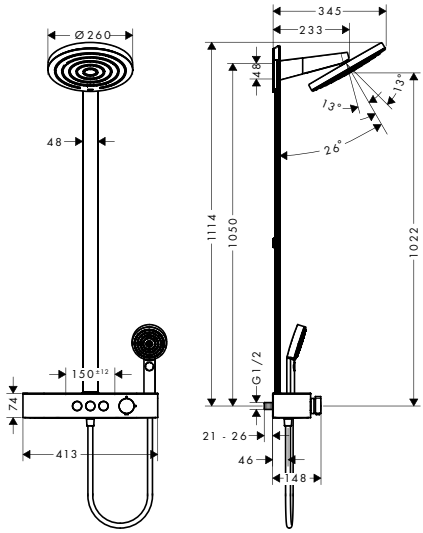

Sustainability

Water Flow Control · EcoSmart

Technologies

Select · Cool Contact · Fast Drain · Quick Clean · XXL Performance

Spray types

Powder Rain · Intense Powder Rain · Intense Rain · Massage

Overview variants

Shower head size	Number of sprays	Spray types	Max. flow rate at 3 bar (l/min)	Min. flow pressure (bar)	Finish	Code no.
260	2	PowderRain, Intense PowderRain	7.5	1.7	Chrome	24241000
					Brushed Bronze	24241140
					Matt Black	24241670
					Matt White	24241700
260	2	PowderRain, Intense PowderRain	12.9	1.3	Chrome	24240000
					Brushed Bronze	24240140
					Matt Black	24240670
					Matt White	24240700

Consisting of:		Included in	Code no.
	Pulsify Select S Hand shower 105 3jet Relaxation EcoSmart	24241XXX	24111XXX
	Pulsify Select S Hand shower 105 3jet Relaxation	24240XXX	24110XXX
	ShowerTablet Select Shower thermostat 400 for exposed installation	24241XXX	24360XXX
	Isiflex Shower hose 160 cm	24241XXX 24240XXX	28276XXX

Optional parts:		Finish	Code no.
	S-connections adapter G ¾ for renovation	Chrome	02026000

Measurements within scale drawings are in mm.
Technical specifications and units of measure are subject to change.

Pulsify S Showerpipes 1jet with thermostat

Features of all variants

- consists of: overhead shower, hand shower, shower thermostat, shower bar, slider, shower hose
- overhead shower Pulsify 260 1jet
- shower head size overhead shower: 260 mm
- spray type overhead shower: PowderRain
- spray disc surface: graphite
- Fast Drain empties the overhead shower from an angle of 10°
- removable shower head
- shelf made of plastic
- surface shelf: graphite
- spray type hand shower: PowderRain, IntenseRain, Massage spray
- max. operating pressure: 10 bar
- ball-joint: overhead shower angle adjustable
- pipe can be shortened in height
- shower bar diameter: 22 mm
- height-adjustable slider with locking push-button slider
- shower arm length overhead shower: 398 mm
- swivel shower arm
- CoolContact thermostat: Prevents the housing from heating up, making showering even safer
- thermostat ShowerTablet Select 400
- safety stop at 40 °C
- adjustable hot water limitation
- convenient diversion via Select button
- simultaneous utilization of 2 functions
- suitable for continuous flow water heaters
- mounting type: exposed installation
- connection thread G ½
- centre distance 150 ± 12 mm
- intrinsically safe against backflow
- Thermostat is delivered with buttons hand shower and overhead shower
- 2 functions



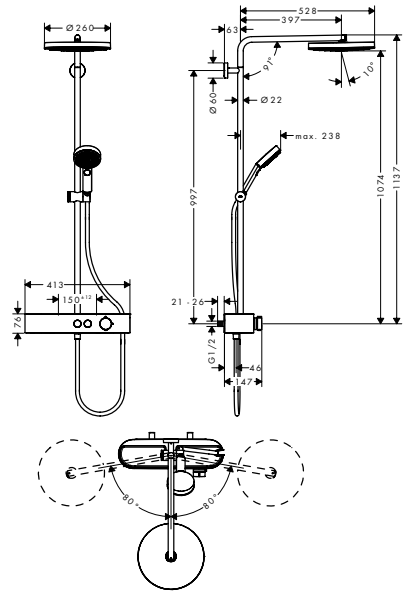

Sustainability

Water Flow Control · EcoSmart

Technologies

Push slider · Select · Cool Contact · Fast Drain · Quick Clean · XXL Performance

Spray types

Powder Rain · Intense Rain · Massage

Overview variants

Shower head size	Number of sprays	Spray types	Max. flow rate at 3 bar (l/min)	Min. flow pressure (bar)	Finish	Code no.
260	1	PowderRain	7.5	0.9	Chrome	24221000
					Brushed Bronze	24221140
					Matt Black	24221670
					Matt White	24221700
260	1	PowderRain	10.9	1.2	Chrome	24220000
					Brushed Bronze	24220140
					Matt Black	24220670
					Matt White	24220700

Consisting of:		Included in	Code no.
	Pulsify S Overhead shower 260 1jet EcoSmart	24221XXX	24141XXX
	Pulsify S Overhead shower 260 1jet	24220XXX	24140XXX
	Pulsify Select S Hand shower 105 3jet Relaxation EcoSmart	24221XXX	24111XXX
	Pulsify Select S Hand shower 105 3jet Relaxation	24220XXX	24110XXX
	ShowerTablet Select Shower thermostat 400 for exposed installation	24221XXX	24360XXX
	Isiflex Shower hose 160 cm	24221XXX 24220XXX	28276XXX

Optional parts:		Finish	Code no.
	S-connections adapter G ¾ for renovation	Chrome	02026000

Measurements within scale drawings are in mm.
Technical specifications and units of measure are subject to change.

Pulsify S Showerpipes 1jet with bath thermostat

Features of all variants

- consists of: overhead shower, hand shower, bath thermostat, shower bar, slider, shower hose
- overhead shower Pulsify 260 1jet
- shower head size overhead shower: 260 mm
- spray type overhead shower: PowderRain
- spray disc surface: graphite
- Fast Drain empties the overhead shower from an angle of 10°
- removable shower head
- shelf made of plastic
- surface shelf: graphite
- spray type hand shower: PowderRain, IntenseRain, Massage spray
- ball-joint: overhead shower angle adjustable
- pipe can be shortened in height
- shower bar diameter: 22 mm
- height-adjustable slider with locking push-button slider
- shower arm length overhead shower: 398 mm
- swivel shower arm
- CoolContact thermostat: Prevents the housing from heating up, making showering even safer
- thermostat ShowerTablet Select 400
- safety stop at 40 °C
- convenient diversion via Select button
- simultaneous utilization of 3 functions
- suitable for continuous flow water heaters
- mounting type: exposed installation
- centre distance 150 ± 12 mm
- intrinsically safe against backflow
- Thermostat is delivered with buttons overhead shower, bath tub and hand shower
- 3 functions



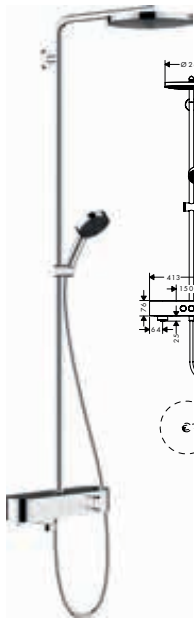

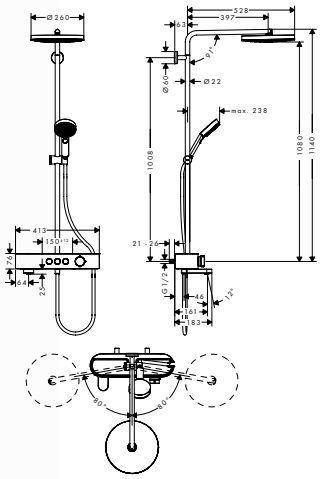

Sustainability



Technologies

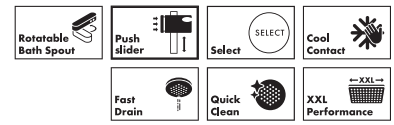

Spray types



Overview variants

Shower head size	Number of sprays	Spray types	flow rate of hand shower at 3 bar (l/min)	flow rate for overhead shower at 3 bar (l/min)	flow rate for bath spout at 3 bar (l/min)	Thermostat	Finish	Code no.
260	1	PowderRain	11.5	11.5	21.8	ShowerTablet Select 400	Chrome	24230000
260	1	PowderRain	8.4	8.4	22.1	ShowerTablet Select 400	Chrome	24231007
							Matt Black	24231677
							Matt White	24231707

Consisting of:		Included in	Code no.
	Pulsify S Overhead shower 260 1jet	24230000	24140000
	Pulsify S Overhead shower 260 1jet EcoSmart	24231677	24141670
	Pulsify Select S Hand shower 105 3jet Relaxation	24230000	24110000
	Isiflex Shower hose 160 cm	24230000	28276000

Optional parts:		For	Finish	Code no.
	S-connections adapter G ¾ for renovation	24230XXX	Chrome	02026000

Measurements within scale drawings are in mm.
Technical specifications and units of measure are subject to change.

Croma Select S Showerpipes 1jet with thermostat

Features of all variants

- consists of: overhead shower, hand shower, shower thermostat, shower hose, slider, shower bar
- overhead shower Croma 280
- shower head size overhead shower: 280 mm
- spray type overhead shower: RainAir
- max. operating pressure: 10 bar
- ball-joint: overhead shower angle adjustable
- pipe can be shortened in height
- shower bar diameter: 22 mm
- height-adjustable hand shower holder
- shower arm length overhead shower: 400 mm
- swivel shower arm
- thermostat Ecostat Comfort
- safety stop at 40 °C
- adjustable hot water limitation
- outlets controlled via turning handle
- suitable for continuous flow water heaters
- mounting type: exposed installation
- connection dimension DN15
- connection thread G ½
- centre distance 150 ± 12 mm
- intrinsically safe against backflow
- 2 functions

280 with hand shower 110 Multi



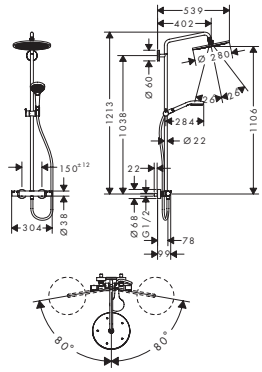

280 with hand hower 120 3jet



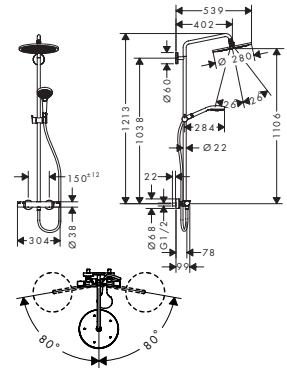

Sustainability

EcoSmart

Technologies

Select · Quick Clean · AirPower · XXL Performance

Spray types

Rain Air · SoftRain · Rain · Intense Rain · Whirl · Massage

Certificates/ declarations

EPD

Overview variants

Shower head size	Spray types overhead shower	Hand shower	Spray types hand shower	Max. flow rate at 3 bar (l/min)	Min. flow pressure (bar)	Finish	Code no.
280	RainAir	110 Multi	Massage spray, IntenseRain, SoftRain	9	2.2	Chrome	26794000
280	RainAir	110 Multi	Massage spray, IntenseRain, SoftRain	15.7	1.3	Chrome	26790000
280	RainAir	120 3jet	RainAir, Rain, Whirl	9	2.2	Brushed Bronze	26891140
						Brushed Black Chrome	26891340
						Matt Black	26891670
						Matt White	26891700
						Polished Gold Optic	26891990
280	RainAir	120 3jet	RainAir, Rain, Whirl	15	1	Brushed Bronze	26890140
						Brushed Black Chrome	26890340
						Matt Black	26890670
						Matt White	26890700
						Polished Gold Optic	26890990

Consisting of:		Included in	Code no.
	Croma Overhead shower 280 1jet EcoSmart 9 l/min	26891XXX 26794000	26221XXX
	Croma Overhead shower 280 1jet	26890XXX 26790000	26220XXX
	Croma Select S Hand shower 110 Multi EcoSmart 9 l/min	26794000	26801400
	Croma Select S Hand shower 110 Multi	26790000	26800400
	Raindance Select S Hand shower 120 3jet EcoSmart 9 l/min	26891XXX	26531XXX

For more information about this product, please see the next page.

Measurements within scale drawings are in mm.
Technical specifications and units of measure are subject to change.

Showerpipes and shower panels

Croma Select S Showerpipes 1jet with thermostat

Consisting of:		Included in	Code no.
	Raindance Select S Hand shower 120 3jet	26890XXX	26530XXX
	Isiflex Shower hose 160 cm	26891XXX 26890XXX 26794000 26790000	28276XXX

Optional parts:		For	Finish	Code no.
	Wall bar spacer	26794XXX	Chrome	98681000
	Wall bar spacer for Croma 100 Showerpipe	26790XXX 26890XXX	Chrome	95239000

Croma Select S Showerpipe 280 1jet with bath thermostat

Features

- consists of: overhead shower, hand shower, bath thermostat, shower hose, slider, shower bar
- overhead shower Croma 280
- shower head size overhead shower: 280 mm
- spray type overhead shower: RainAir
- spray disc surface: chrome
- flow rate RainAir spray (at 3 bar): 16 l/min
- flow rate bath filler: 20 l/min
- spray type hand shower: Massage spray, IntenseRain, SoftRain
- flow rate of hand shower at 3 bar: 13 l/min
- maximum flow rate for Showerpipe at 3 bar: 19 l/min
- minimum flow pressure: 1 bar
- max. operating pressure: 10 bar
- ball-joint: overhead shower angle adjustable
- pipe can be shortened in height
- shower bar diameter: 22 mm
- height-adjustable hand shower holder
- swivel shower arm
- thermostat Ecostat Comfort
- safety stop at 40 °C
- adjustable hot water limitation
- outlets controlled via turning handle
- suitable for continuous flow water heaters
- mounting type: exposed installation
- connection dimension DN15
- connection thread G ½
- centre distance 150 ± 12 mm
- intrinsically safe against backflow
- 3 functions



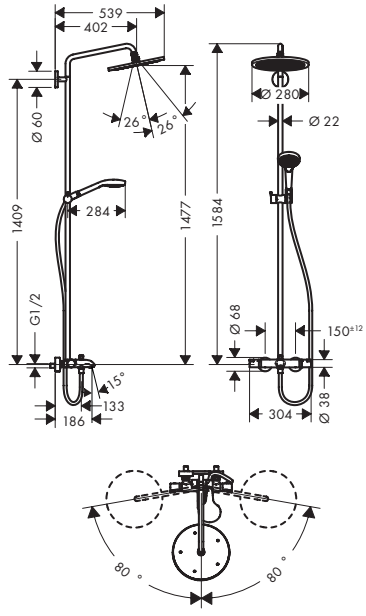

Technologies

Quick Clean · AirPower · XXL Performance

Spray types

Rain Air · SoftRain · Intense Rain · Massage

Certificates/declarations

EPD

Finish	Code no.
Chrome	26792000

Consisting of:		Included in	Code no.
	Croma Overhead shower 280 1jet	26792000	26220000
	Croma Select S Hand shower 110 Multi	26792000	26800400
	Isiflex Shower hose 200 cm	26792000	28274000

Optional parts:		Finish	Code no.
	Wall bar spacer for Croma 100 Showerpipe	Chrome	95239000

Measurements within scale drawings are in mm.
Technical specifications and units of measure are subject to change.

Croma Select S Showerpipe 280 1jet with single lever mixer

Features

- consists of: overhead shower, hand shower, single lever shower mixer, shower hose, hand shower holder, shower bar
- overhead shower Croma 280
- shower head size overhead shower: 280 mm
- spray type overhead shower: RainAir
- flow rate RainAir spray (at 3 bar): 15 l/min
- spray type hand shower: Massage spray, IntenseRain, SoftRain
- maximum flow rate for Showerpipe at 3 bar: 15 l/min
- minimum flow pressure: 1 bar
- max. operating pressure: 10 bar
- ball-joint: overhead shower angle adjustable
- pipe can be shortened in height
- shower bar diameter: 22 mm
- height-adjustable hand shower holder
- shower arm length overhead shower: 400 mm
- swivelling shower arm
- suitable for continuous flow water heaters with an output of 18 kW
- mounting type: exposed installation
- connection dimension DN15
- connection thread G ½
- centre distance 150 ± 12 mm
- ceramic cartridge
- temperature limitation adjustable
- 2 functions



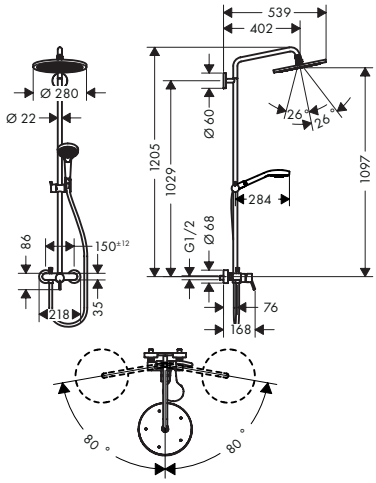

Technologies

Quick Clean · AirPower · XXL Performance

Spray types

Rain Air · SoftRain · Intense Rain · Massage

Certificates/declarations

EPD

Finish	Code no.
Chrome	26791000

Consisting of:		Included in	Code no.
	Croma Overhead shower 280 1jet	26791000	26220000
	Croma Select S Hand shower 110 Multi	26791000	26800400
	Isiflex Shower hose 160 cm	26791000	28276000

Optional parts:		Finish	Code no.
	Wall bar spacer for Croma 100 Showerpipe	Chrome	95239000

Measurements within scale drawings are in mm.
Technical specifications and units of measure are subject to change.

Croma Select S Showerpipe 280 1jet Reno

Features

- consists of: overhead shower, hand shower, shower hose, hand shower holder, shower bar
- overhead shower Croma 280
- shower head size overhead shower: 280 mm
- spray type overhead shower: RainAir
- flow rate RainAir spray (at 3 bar): 10 l/min
- spray type hand shower: Massage spray, IntenseRain, SoftRain
- flow rate of hand shower at 3 bar: 10,2 l/min
- maximum flow rate for Showerpipe at 3 bar: 10,2 l/min
- minimum flow pressure: 1,5 bar
- max. operating pressure: 10 bar
- ball-joint: overhead shower angle adjustable
- mounting type: exposed installation
- pipe can be shortened in height
- shower bar diameter: 22 mm
- height-adjustable hand shower holder
- shower arm length: 400 mm
- swivelling shower arm
- water connection: Isiflex shower hose 80 cm
- connection dimension: DN15
- connection thread G ½



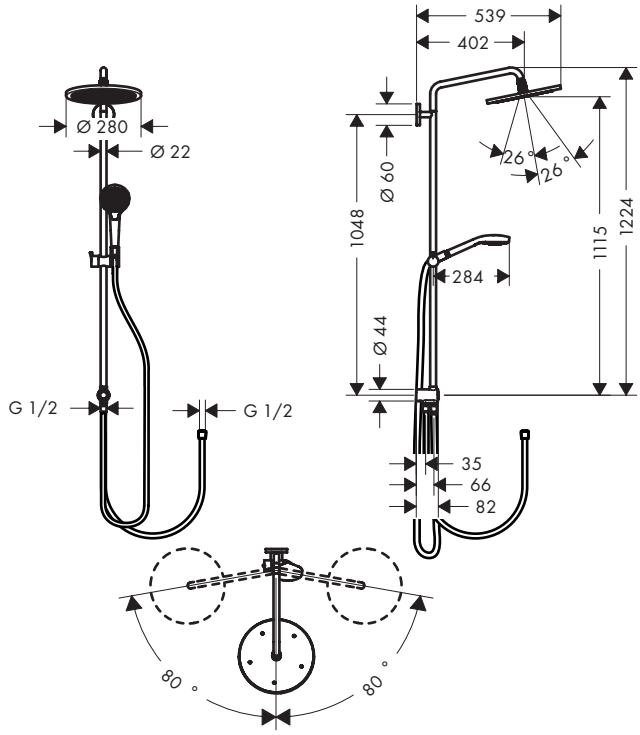

Technologies

Quick Clean · AirPower · XXL Performance

Spray types

Rain Air · SoftRain · Intense Rain · Massage

Certificates/declarations

EPD

Finish	Code no.
Chrome	26793000

Consisting of:		Included in	Code no.
	Croma Overhead shower 280 1jet	26793000	26220000
	Croma Select S Hand shower 110 Multi	26793000	26800400
	Isiflex Shower hose 160 cm	26793000	28276000
	Isiflex Shower hose B 80 cm	26793000	28278000

Optional parts:		Finish	Code no.
	Wall bar spacer for Croma 100 Showerpipe	Chrome	95239000

Measurements within scale drawings are in mm.
Technical specifications and units of measure are subject to change.

Croma Select S SemiPipe Multi with thermostat

Features

- consists of: hand shower, shower thermostat, shower hose, slider, shower bar
- wallbar could be also used as grab bar
- spray type hand shower: Massage spray, IntenseRain, SoftRain
- flow rate of hand shower at 3 bar: 16 l/min
- maximum flow rate for Showerpipe at 3 bar: 16 l/min
- minimum flow pressure: 1 bar
- max. operating pressure: 10 bar
- shower bar diameter: 25 mm
- height-adjustable hand shower holder
- thermostat Ecostat Comfort
- safety stop at 40 °C
- adjustable hot water limitation
- outlets controlled via turning handle
- suitable for continuous flow water heaters
- mounting type: exposed installation
- connection dimension DN15
- connection thread G ½
- centre distance 150 ± 12 mm
- pipe length: 1000 mm
- TÜV certified
- 1 function



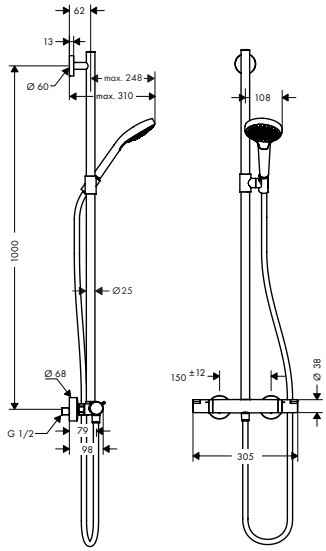

Technologies

Select · Quick Clean · XXL Performance

Spray types

SoftRain · Intense Rain · Massage

Finish	Code no.
White/Chrome	27247400

Consisting of:		Included in	Code no.
	Croma Select S Hand shower 110 Multi	27247400	26800400
	Isiflex Shower hose 160 cm	27247400	28276000

Optional parts:		Finish	Code no.
	Wall bar spacer for Croma 100 Showerpipe	Chrome	95239000

Measurements within scale drawings are in mm.
Technical specifications and units of measure are subject to change.

Croma Select E SemiPipe Multi with thermostat

Features

- consists of: hand shower, shower thermostat, shower hose, slider, shower bar
- wallbar could be also used as grab bar
- spray type hand shower: Massage spray, IntenseRain, SoftRain
- flow rate of hand shower at 3 bar: 16 l/min
- maximum flow rate for Showerpipe at 3 bar: 16 l/min
- minimum flow pressure: 1 bar
- max. operating pressure: 10 bar
- shower bar diameter: 25 mm
- height-adjustable hand shower holder
- thermostat Ecostat Comfort
- safety stop at 40 °C
- adjustable hot water limitation
- outlets controlled via turning handle
- mounting type: exposed installation
- connection dimension DN15
- connection thread G ½
- centre distance 150 ± 12 mm
- pipe length: 1000 mm
- TÜV certified
- 1 function



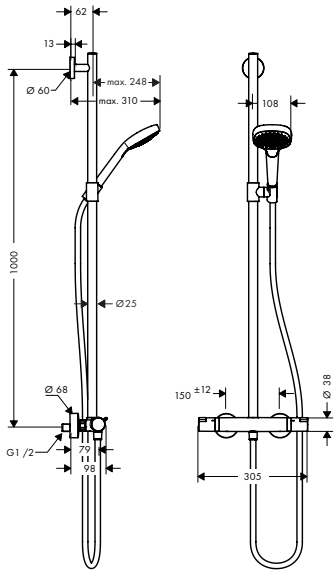

Technologies



Spray types



Finish	Code no.
White/Chrome	27248400

Consisting of:	Included in	Code no.
Croma Select E Hand shower 110 Multi	27248400	26810400
Isiflex Shower hose 160 cm	27248400	28276000

Optional parts:	Finish	Code no.
Wall bar spacer for Croma 100 Showerpipe	Chrome	95239000

Measurements within scale drawings are in mm.
Technical specifications and units of measure are subject to change.

Croma E Showerpipes 1jet with thermostat

Features of all variants

- consists of: overhead shower, hand shower, shower thermostat, shower hose, slider, shower bar
- overhead shower Croma E 280 1jet
- shower head size overhead shower: 280 x 170 mm
- spray type overhead shower: RainAir
- spray type hand shower: Massage spray, IntenseRain, SoftRain
- max. operating pressure: 10 bar
- ball-joint: overhead shower angle adjustable
- pipe can be shortened in height
- shower bar diameter: 22 mm
- height-adjustable slider with locking push-button slider
- shower arm length overhead shower: 340 mm
- swivel shower arm
- CoolContact thermostat: Prevents the housing from heating up, making showering even safer
- thermostat Ecostat E
- safety stop at 40 °C
- adjustable hot water limitation
- suitable for continuous flow water heaters
- mounting type: exposed installation
- connection thread G ½
- centre distance 150 ± 12 mm
- intrinsically safe against backflow
- pipe length: 1177 mm
- 2 functions



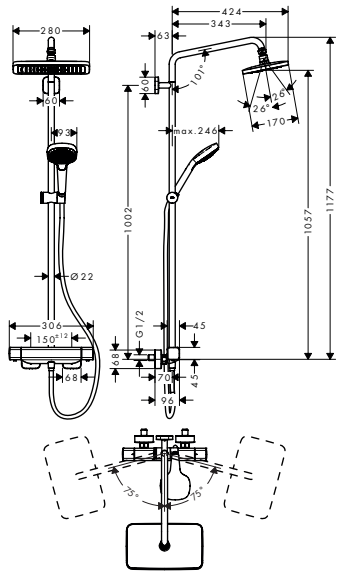

Sustainability

EcoSmart

Technologies

Select · Cool Contact · Quick Clean · AirPower · XXL Performance

Spray types

Rain Air · SoftRain · Intense Rain · Massage

Certificates/declarations

EPD

Overview variants

Shower head size	Number of sprays	Spray types	Max. flow rate at 3 bar (l/min)	Min. flow pressure (bar)	Finish	Code no.
280	1	RainAir	8.5	1	Chrome	27660000
280	1	RainAir	15	1.7	Chrome	27630000

Consisting of:		Included in	Code no.
	Ecostat E Shower thermostat for exposed installation	27660000 27630000	15773000
	Croma E Overhead shower 280 1jet EcoSmart	27660000	26258000
	Croma E Overhead shower 280 1jet	27630000	26257000
	Croma Select E Hand shower 110 Multi EcoSmart 9 l/min	27660000	26811400
	Croma Select E Hand shower 110 Multi	27630000	26810400
	Isiflex Shower hose 200 cm	27660000	28274000
	Isiflex Shower hose 160 cm	27630000	28276000

Measurements within scale drawings are in mm.
Technical specifications and units of measure are subject to change.

Croma E Showerpipe 280 1jet with bath thermostat

Features

- consists of: overhead shower, hand shower, bath thermostat, shower hose, slider, shower bar
- shower head size overhead shower: 280 x 170 mm
- spray type overhead shower: RainAir
- spray disc surface: chrome
- flow rate RainAir spray (at 3 bar): 15 l/min
- flow rate bath filler: 20 l/min
- spray type hand shower: Massage spray, IntenseRain, SoftRain
- flow rate of hand shower at 3 bar: 13,6 l/min
- maximum flow rate for Showerpipe at 3 bar: 20,3 l/min
- minimum flow pressure: 1,7 bar
- max. operating pressure: 10 bar
- ball-joint: overhead shower angle adjustable
- shower bar diameter: 22 mm
- height-adjustable slider with locking push-button slider
- swivel shower arm
- CoolContact thermostat: Prevents the housing from heating up, making showering even safer
- thermostat Ecostat E
- safety stop at 40 °C
- adjustable hot water limitation
- suitable for continuous flow water heaters
- mounting type: exposed installation
- connection thread G ½
- centre distance 150 ± 12 mm
- intrinsically safe against backflow
- pipe length: 1660 mm
- 3 functions



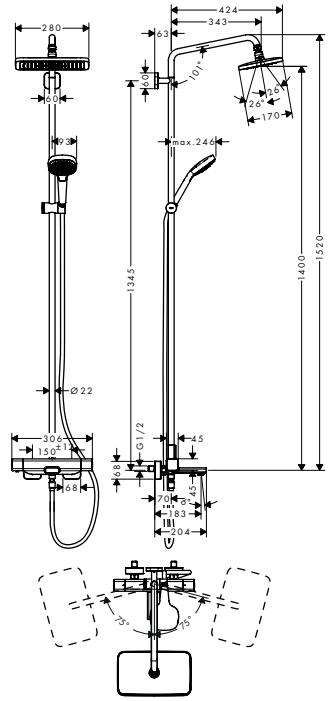

Technologies

Cool Contact · Quick Clean · AirPower · XXL Performance

Spray types

Rain Air · SoftRain · Intense Rain · Massage

Certificates/declarations

EPD

Finish	Code no.
Chrome	27687000

Consisting of:		Included in	Code no.
	Ecostat E Bath thermostat for exposed installation	27687000	15774000
	Croma E Overhead shower 280 1jet	27687000	26257000
	Croma Select E Hand shower 110 Multi	27687000	26810400
	Isiflex Shower hose 160 cm	27687000	28276000

Measurements within scale drawings are in mm.
Technical specifications and units of measure are subject to change.

Croma Showerpipes 1jet with thermostat

Features of all variants

- shower head size overhead shower: 220 mm
- spray type overhead shower: RainAir
- ball-joint: overhead shower angle adjustable
- shower bar diameter: 22 mm
- height-adjustable hand shower holder
- shower arm length overhead shower: 400 mm
- thermostat Ecostat Comfort
- safety stop at 40 °C
- adjustable hot water limitation
- outlets controlled via turning handle
- suitable for continuous flow water heaters
- mounting type: exposed installation
- connection dimension DN15
- connection thread G ½
- centre distance 150 ± 12 mm
- intrinsically safe against backflow
- 2 functions



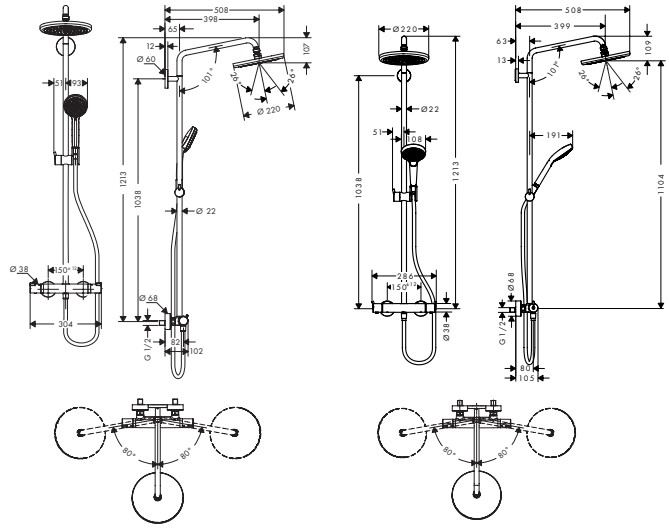

Sustainability

EcoSmart

Technologies

Quick Clean | AirPower | XXL Performance

Spray types

Rain Air | Normal | Rain | Shampoo | Massage

Certificates/declarations

EPD

Overview variants

Shower head size	Number of sprays	Spray types	Max. flow rate at 3 bar (l/min)	Min. flow pressure (bar)	Finish	Code no.
220	1	RainAir	9	1.7	Chrome	27188000
220	1	RainAir	15	1.2	Chrome	27185000
220	1	RainAir	9	1.5	Chrome	26171007

Consisting of:		Included in	Code no.
	Croma Overhead shower 220 1jet EcoSmart 9 l/min	27188000	26465000
	Croma Overhead shower 220 1jet	27185000	26464000
	Isiflex Shower hose 160 cm	27188000 27185000	28276000
	Croma 100 Hand shower Vario	27185000	28535000

Optional parts:		For	Finish	Code no.
	Wall bar spacer for Croma 100 Showerpipe	27188XXX 27185XXX	Chrome	95239000

Measurements within scale drawings are in mm.
Technical specifications and units of measure are subject to change.

Showerpipes and shower panels

Croma Showerpipes 1jet with bath thermostat

Features of all variants

- spray type overhead shower: RainAir
- ball-joint: overhead shower angle adjustable
- height-adjustable hand shower holder
- thermostat Ecostat Comfort
- safety stop at 40 °C
- adjustable hot water limitation
- outlets controlled via turning handle
- suitable for continuous flow water heaters
- mounting type: exposed installation
- connection dimension DN15
- connection thread G ½
- centre distance 150 ± 12 mm
- intrinsically safe against backflow
- 3 functions

280

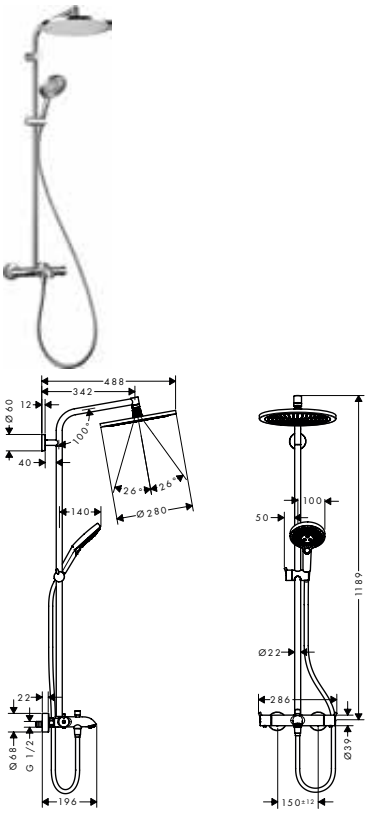

220 with hand shower 110 Multi

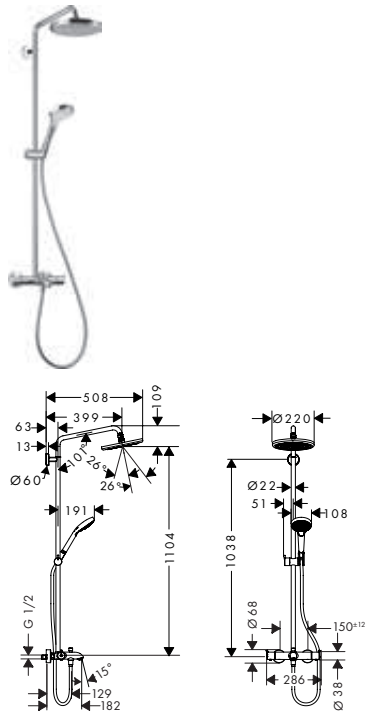

220 with hand shower 100 Vario

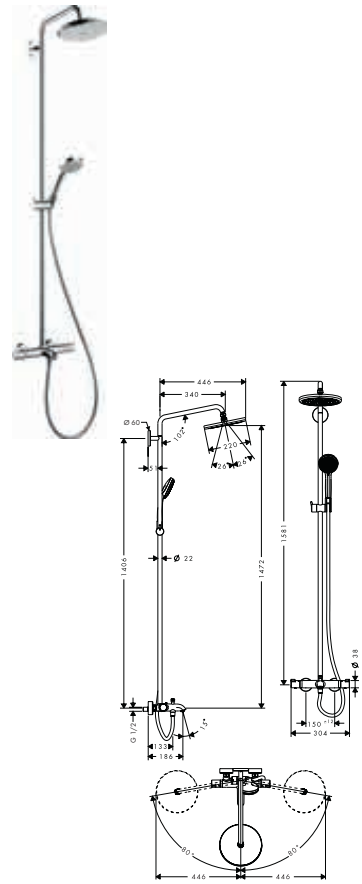

Technologies



Spray types



Certificates/declarations

EPD

Overview variants

Shower head size	Number of sprays	Spray types	Min. flow pressure (bar)	flow rate of hand shower at 3 bar (l/min)	flow rate for overhead shower at 3 bar (l/min)	flow rate for bath spout at 3 bar (l/min)	Thermostat	Finish	Code no.
220	1	RainAir	1	17.2	17		Ecostat Comfort	Chrome	27223000
220	1	RainAir	1.5	11.6	9	18	Ecostat Comfort	Chrome	26170007
280	1	RainAir	2.2	9.8		20	Ecostat Comfort	Chrome	26175007

Consisting of:		Included in	Code no.
	Croma Overhead shower 220 1jet	27223000	26464000
	Croma 100 Hand shower Vario	27223000	28535000
	Isiflex Shower hose 200 cm	27223000	28274000

Optional parts:		For	Finish	Code no.
	Wall bar spacer for Croma 100 Showerpipe	27223XXX	Chrome	95239000

Measurements within scale drawings are in mm.
Technical specifications and units of measure are subject to change.

Croma Showerpipes 2jet, 1jet with single lever shower mixers

Features of all variants

- overhead shower Croma 220
- shower head size overhead shower: 220 mm
- spray type overhead shower: RainAir
- ball-joint: overhead shower angle adjustable
- height-adjustable hand shower holder
- suitable for continuous flow water heaters with an output of 18 kW
- mounting type: exposed installation
- connection dimension DN15
- connection thread G ½
- centre distance 150 ± 12 mm
- ceramic cartridge
- temperature limitation adjustable
- 3 functions



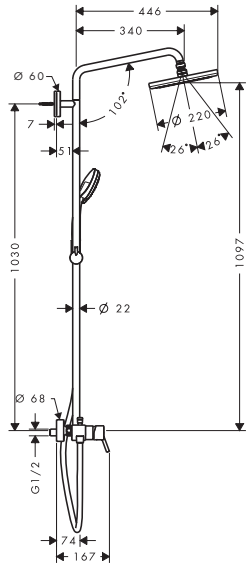



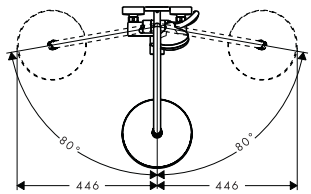

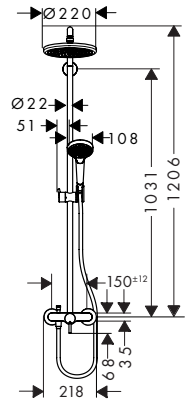

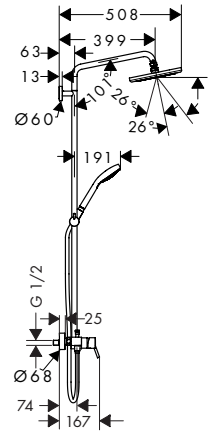

Technologies



Spray types

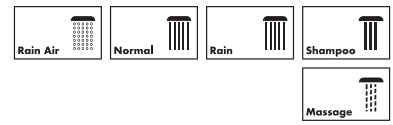

Certificates/declarations

EPD

Overview variants

Shower head size	Number of sprays	Spray types	Max. flow rate at 3 bar (l/min)	Min. flow pressure (bar)	Finish	Code no.
220	1	RainAir	16	1	Chrome	27222000
220	1	RainAir	12	1.5	Chrome	26172007

Consisting of:		Included in	Code no.
	Croma Overhead shower 220 1jet	27222000	26464000
	Croma 100 Hand shower Vario	27222000	28535000
	Isiflex Shower hose 160 cm	27222000	28276000

Optional parts:		For	Finish	Code no.
	Wall bar spacer for Croma 100 Showerpipe	27222XXX	Chrome	95239000

Measurements within scale drawings are in mm.
Technical specifications and units of measure are subject to change.

Croma Showerpipe 220 1jet Reno

Features

- consists of: overhead shower, hand shower, shower hose, hand shower holder, shower bar
- overhead shower Croma 220
- shower head size overhead shower: 220 mm
- spray type overhead shower: RainAir
- spray disc surface: chrome
- flow rate RainAir spray (at 3 bar): 14 l/min
- spray type hand shower: Rain, Massage spray, Shampoo spray, normal spray
- flow rate of hand shower at 3 bar: 14,5 l/min
- maximum flow rate for Showerpipe at 3 bar: 18,5 l/min
- minimum flow pressure: 1,7 bar
- max. operating pressure: 6 bar
- ball-joint: overhead shower angle adjustable
- mounting type: exposed installation
- pipe can be shortened in height
- shower bar diameter: 22 mm
- height-adjustable hand shower holder
- shower arm length: 400 mm
- swivelling shower arm
- water connection: Isiflex shower hose 80 cm
- connection dimension: DN15
- connection thread G ½
- suitable for continuous flow water heaters



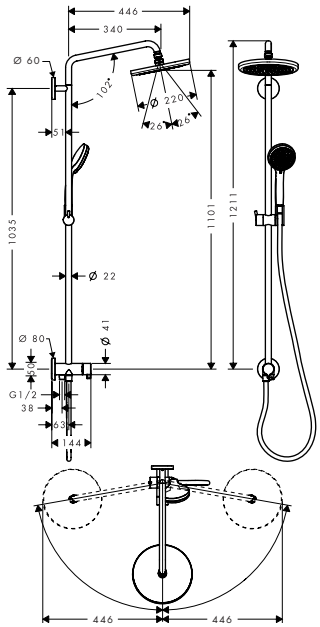

Technologies

Quick Clean · AirPower · XXL Performance

Spray types

Rain Air · Normal · Rain · Shampoo · Massage

Certificates/declarations

EPD

Finish	Code no.
Chrome	27224000

Consisting of:		Included in	Code no.
	Croma Overhead shower 220 1jet	27224000	26464000
	Croma 100 Hand shower Vario	27224000	28535000
	Isiflex Shower hose 160 cm	27224000	28276000
	Isiflex Shower hose B 80 cm	27224000	28278000

Optional parts:		Finish	Code no.
	Wall bar spacer for Croma 100 Showerpipe	Chrome	95239000

Measurements within scale drawings are in mm.
Technical specifications and units of measure are subject to change.

Crometta S Showerpipes 1jet with thermostat

Features of all variants

- overhead shower Crometta S 240
- shower head size overhead shower: 240 mm
- spray type overhead shower: Rain
- max. operating pressure: 10 bar
- ball-joint: overhead shower angle adjustable
- hand shower holder inclination angle can be adjusted by 45°
- shower bar diameter: 22 mm
- height-adjustable hand shower holder
- shower arm length overhead shower: 350 mm
- safety stop at 40 °C
- adjustable hot water limitation
- outlets controlled via turning handle
- suitable for continuous flow water heaters
- mounting type: exposed installation
- connection dimension DN15
- connection thread G ½
- centre distance 150 ± 12 mm
- intrinsically safe against backflow
- 2 functions



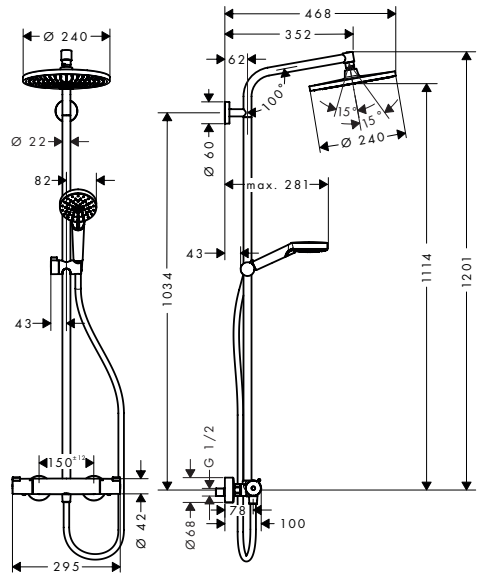

Sustainability

EcoSmart

Technologies

Quick Clean

XXL Performance

Spray types

Normal

Rain

Shampoo

Intense Rain

Massage

Certificates/declarations

EPD

Overview variants

Shower head size	Number of sprays	Spray types	Max. flow rate at 3 bar (l/min)	Min. flow pressure (bar)	Finish	Code no.
240	1	Rain	7.6	1	Chrome	27268000
240	1	Rain	16	1.2	Chrome	27267000
240	1	Rain	9	0.6	Chrome	27340007

Consisting of:		Included in	Code no.
	Crometta S Overhead shower 240 1jet EcoSmart 9 l/min	27268000	26724000
	Crometta S Overhead shower 240 1jet	27267000	26723000
	Crometta Hand shower 100 Vario EcoSmart 9 l/min	27268000	26332400
	Crometta Hand shower 100 Vario	27267000	26330400
	Isiflex Shower hose 160 cm	27268000 27267000	28276000

Optional parts:		For	Finish	Code no.
	Wall bar spacer for Croma 100 Showerpipe	27268XXX 27267XXX	Chrome	95239000

Measurements within scale drawings are in mm.
Technical specifications and units of measure are subject to change.

Showerpipes and shower panels

Cromette S Showerpipes 1jet with bath thermostat

Features of all variants

- shower head size overhead shower: 240 mm
- spray type overhead shower: Rain
- ball-joint: overhead shower angle adjustable
- height-adjustable hand shower holder
- safety stop at 40 °C
- adjustable hot water limitation
- outlets controlled via turning handle
- suitable for continuous flow water heaters
- mounting type: exposed installation
- connection dimension DN15
- connection thread G ½
- centre distance 150 ± 12 mm
- intrinsically safe against backflow

240



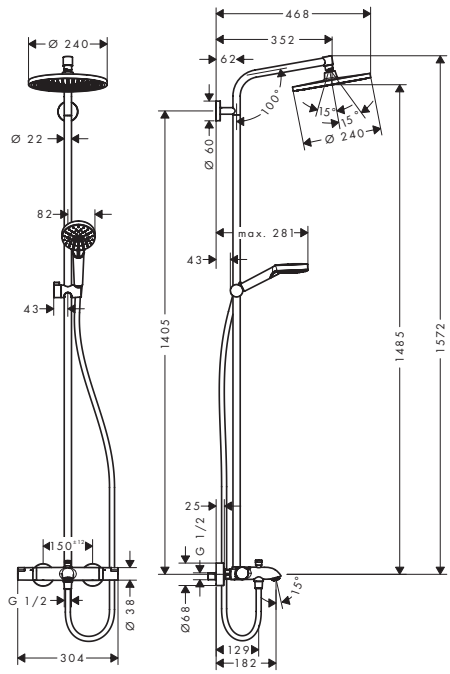

240 with single lever bath thermostat



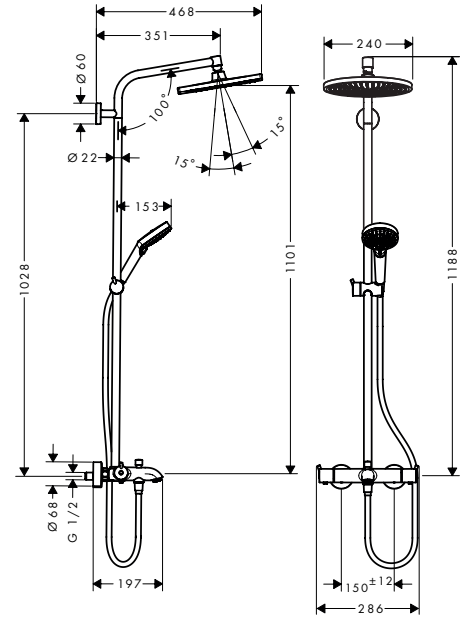

Sustainability

EcoSmart

Technologies

Quick Clean

XXL Performance

Spray types

Rain

Intense Rain

Certificates/declarations

EPD

Overview variants

Shower head size	Number of sprays	Spray types	Min. flow pressure (bar)	flow rate of hand shower at 3 bar (l/min)	flow rate for overhead shower at 3 bar (l/min)	flow rate for bath spout at 3 bar (l/min)	Thermostat	Finish	Code no.
240	1	Rain	1	13.3	17	20	Ecostat Comfort	Chrome	27320000
240	1	Rain	1.1	10.3		19	Ecostat 1001 CL	Chrome	26177007

Consisting of:		Included in	Code no.
	Crometta S Overhead shower 240 1jet	27320000	26723000
	Crometta Hand shower 100 Vario	27320000	26330400
	Isiflex Shower hose 200 cm	27320000	28274000

Optional parts:		For	Finish	Code no.
	Wall bar spacer for Croma 100 Showerpipe	27320XXX	Chrome	95239000

Measurements within scale drawings are in mm.
Technical specifications and units of measure are subject to change.

Crometta S Showerpipes 2jet, 1jet with single lever shower mixers

Features of all variants

- overhead shower Crometta S 240
- shower head size overhead shower: 240 mm
- spray type overhead shower: Rain
- max. operating pressure: 10 bar
- ball-joint: overhead shower angle adjustable
- hand shower holder inclination angle can be adjusted by 45°
- height-adjustable hand shower holder
- shower arm length overhead shower: 350 mm
- suitable for continuous flow water heaters with an output of 18 kW
- mounting type: exposed installation
- connection dimension DN15
- connection thread G ½
- centre distance 150 ± 12 mm
- ceramic cartridge
- adjustable hot water limitation





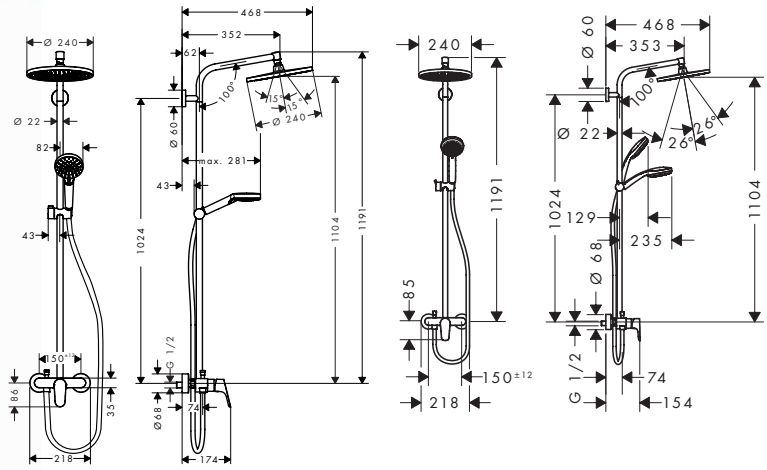

Technologies

Quick Clean

XXL Performance

Spray types

Rain

Intense Rain

Certificates/declarations

EPD

Overview variants

Shower head size	Number of sprays	Spray types	Max. flow rate at 3 bar (l/min)	Min. flow pressure (bar)	Finish	Code no.
240	1	Rain	15	1.8	Chrome	27269000
240	1	Rain	20	0.6	Chrome	27341007

Consisting of:		Included in	Code no.
	Crometta S Overhead shower 240 1jet	27269000	26723000
	Crometta Hand shower 100 Vario	27269000	26330400
	Isiflex Shower hose 160 cm	27269000	28276000

Optional parts:		For	Finish	Code no.
	Wall bar spacer for Croma 100 Showerpipe	27269XXX	Chrome	95239000

Measurements within scale drawings are in mm.
Technical specifications and units of measure are subject to change.

Crometta S Showerpipes 1jet Reno

Features of all variants

- overhead shower Crometta S 240
- shower head size overhead shower: 240 mm
- spray type overhead shower: Rain
- flow rate Rain spray (at 3 bar): 9 l/min
- maximum flow rate for Showerpipe at 3 bar: 9 l/min
- ball-joint: overhead shower angle adjustable
- hand shower holder inclination angle can be adjusted by 45°
- mounting type: exposed installation
- shower bar diameter: 22 mm
- height-adjustable hand shower holder
- shower arm length: 350 mm
- water connection: Isiflex shower hose 80 cm
- connection dimension: DN15
- connection thread G ½
- suitable for continuous flow water heaters





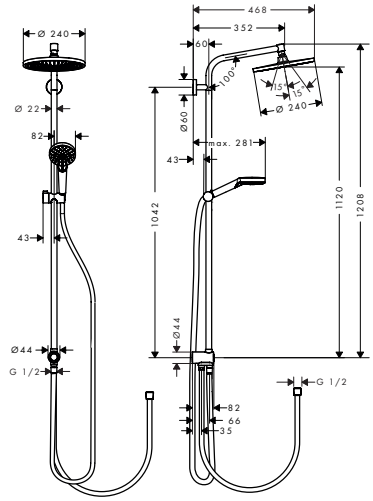

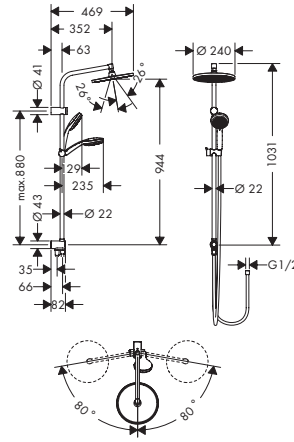

Sustainability

EcoSmart

Technologies

Quick Clean

XXL Performance

Spray types

Rain

Intense Rain

Certificates/declarations

EPD

Overview variants

Shower head size	Number of sprays	Spray types	Max. flow rate at 3 bar (l/min)	Min. flow pressure (bar)	Finish	Code no.
240	1	Rain	9	1	Chrome	27270000
240	1	Rain	9	0.6	Chrome	27342007

Consisting of:		Included in	Code no.
	Crometta S Overhead shower 240 1jet EcoSmart 9 l/min	27270000	26724000
	Crometta Hand shower 100 Vario EcoSmart 9 l/min	27270000	26332400
	Isiflex Shower hose 160 cm	27270000	28276000
	Isiflex Shower hose B 80 cm	27270000	28278000

Optional parts:		For	Finish	Code no.
	Wall bar spacer for Croma 100 Showerpipe	27270XXX	Chrome	95239000

Measurements within scale drawings are in mm.
Technical specifications and units of measure are subject to change.

Crometta E Showerpipes 1jet with thermostat

Features of all variants

- spray type overhead shower: Rain
- max. operating pressure: 10 bar
- ball-joint: overhead shower angle adjustable
- shower bar diameter: 22 mm
- height-adjustable hand shower holder
- shower arm length overhead shower: 350 mm
- adjustable hot water limitation
- outlets controlled via turning handle
- suitable for continuous flow water heaters
- mounting type: exposed installation
- connection dimension DN15
- connection thread G ½
- centre distance 150 ± 12 mm
- intrinsically safe against backflow
- 2 functions



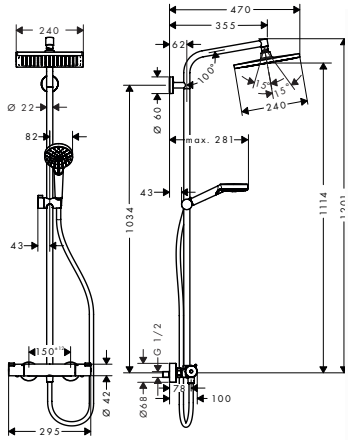



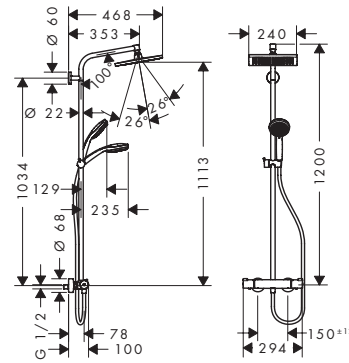

Sustainability

EcoSmart

Technologies

Quick Clean · AirPower · XXL Performance

Spray types

Rain · Intense Rain

Certificates/declarations

EPD

Overview variants

Shower head size	Number of sprays	Spray types	Max. flow rate at 3 bar (l/min)	Min. flow pressure (bar)	Finish	Code no.
240	1	Rain	7.6	1.3	Chrome	27281000
240	1	Rain	15	1.2	Chrome	27271000
240	1	Rain	11	1.1	Chrome	26779007
240	1	Rain	9	1.2	Chrome	27344007

Consisting of:		Included in	Code no.
	Crometta E Overhead shower 240 1jet EcoSmart 9 l/min	27281000	26727000
	Crometta E Overhead shower 240 1jet	27271000	26726000
	Crometta Hand shower 100 Vario EcoSmart 9 l/min	27281000	26332400
	Crometta Hand shower 100 Vario	27271000	26330400
	Isiflex Shower hose 160 cm	27281000 27271000	28276000

Optional parts:		For	Finish	Code no.
	Wall bar spacer for Croma 100 Showerpipe	27281XXX 27271XXX	Chrome	95239000

Measurements within scale drawings are in mm.
Technical specifications and units of measure are subject to change.

Crometta E Showerpipes 1jet with bath thermostat

Features of all variants

- overhead shower Crometta E 240
- shower head size overhead shower: 240 x 240 mm
- spray type overhead shower: Rain
- ball-joint: overhead shower angle adjustable
- height-adjustable hand shower holder
- adjustable hot water limitation
- suitable for continuous flow water heaters
- mounting type: exposed installation
- intrinsically safe against backflow
- 3 functions

240

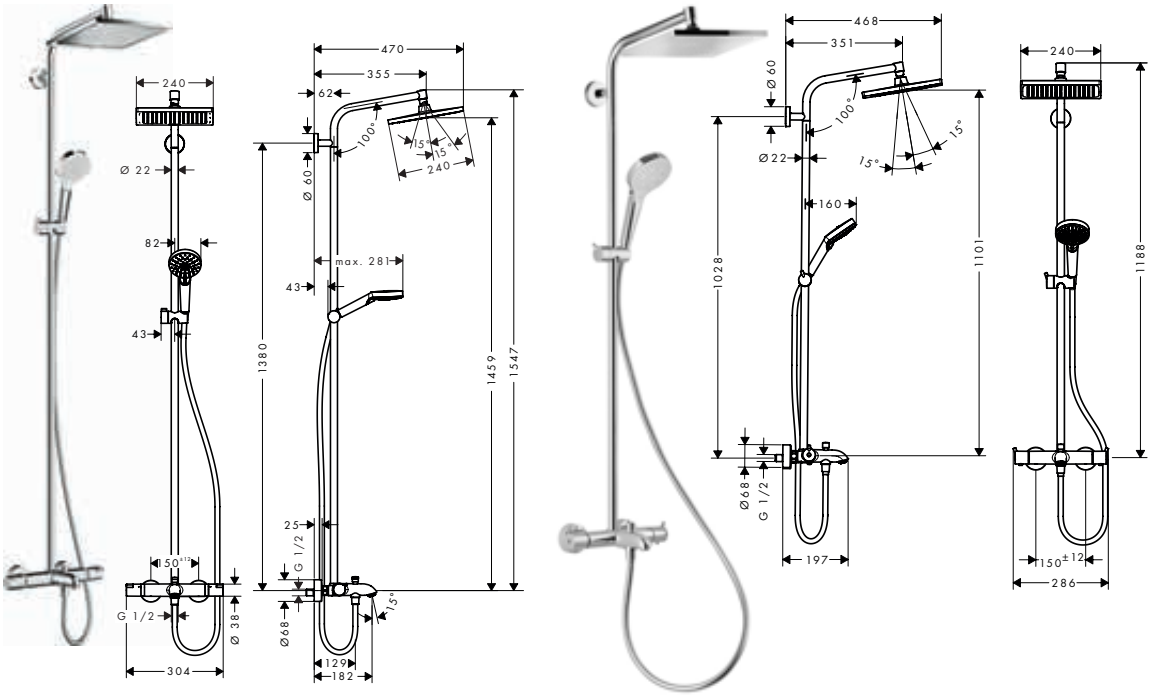

Technologies

Quick Clean

XXL Performance

Spray types

Rain

Intense Rain

Certificates/declarations

EPD

Overview variants

Shower head size	Number of sprays	Spray types	Min. flow pressure (bar)	flow rate of hand shower at 3 bar (l/min)	flow rate for overhead shower at 3 bar (l/min)	flow rate for bath spout at 3 bar (l/min)	Thermostat	Finish	Code no.
240	1	Rain	1	13.5	17	20	Ecostat Comfort	Chrome	27298000
240	1	Rain	1.2	10.3	9	19		Chrome	26181007

Consisting of:		Included in	Code no.
	Crometta E Overhead shower 240 1jet	27298000	26726000
	Crometta Hand shower 100 Vario	27298000	26330400
	Isiflex Shower hose 200 cm	27298000	28274000

Optional parts:		For	Finish	Code no.
	Wall bar spacer for Croma 100 Showerpipe	27298XXX	Chrome	95239000

Measurements within scale drawings are in mm.
Technical specifications and units of measure are subject to change.

Crometta E Showerpipes 2jet, 1jet with single lever shower mixers

Features of all variants

- overhead shower Crometta E 240
- spray type overhead shower: Rain
- max. operating pressure: 10 bar
- ball-joint: overhead shower angle adjustable
- hand shower holder inclination angle can be adjusted by 45°
- shower bar diameter: 22 mm
- height-adjustable hand shower holder
- shower arm length overhead shower: 350 mm
- suitable for continuous flow water heaters with an output of 18 kW
- mounting type: exposed installation
- connection dimension DN15
- connection thread G ½
- centre distance 150 ± 12 mm
- ceramic cartridge
- adjustable hot water limitation





Technologies



Spray types

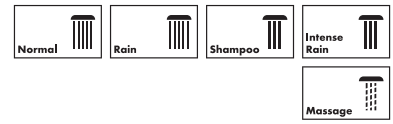

Certificates/declarations

EPD

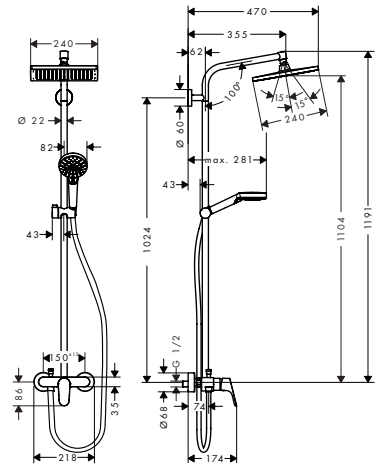

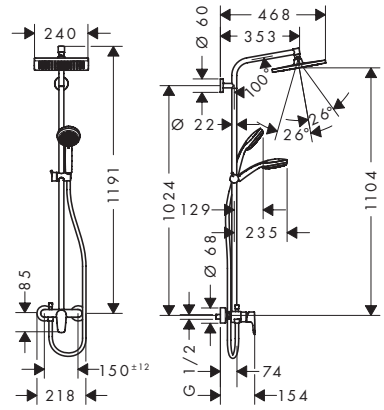

Overview variants

Shower head size	Number of sprays	Spray types	Max. flow rate at 3 bar (l/min)	Min. flow pressure (bar)	Finish	Code no.
240	1	Rain	15	1.8	Chrome	27284000
240	1	Rain	11.7	1.1	Chrome	27345007

Consisting of:		Included in	Code no.
	Crometta E Overhead shower 240 1jet	27284000	26726000
	Crometta Hand shower 100 Vario	27284000	26330400
	Isiflex Shower hose 160 cm	27284000	28276000

Optional parts:		For	Finish	Code no.
	Wall bar spacer for Croma 100 Showerpipe	27284XXX	Chrome	95239000

Measurements within scale drawings are in mm.
Technical specifications and units of measure are subject to change.

Crometta E Showerpipe 240 1jet EcoSmart 9 l/min Reno

Features

- consists of: overhead shower, hand shower, shower bar, hand shower holder, shower hose
- overhead shower Crometta E 240
- shower head size overhead shower: 240 x 240 mm
- spray type overhead shower: Rain
- spray disc surface: chrome
- flow rate Rain spray (at 3 bar): 9 l/min
- spray type hand shower: Rain, IntenseRain
- maximum flow rate for Showerpipe at 3 bar: 9 l/min
- minimum flow pressure: 1 bar
- max. operating pressure: 10 bar
- ball-joint: overhead shower angle adjustable
- hand shower holder inclination angle can be adjusted by 45°
- mounting type: exposed installation
- pipe can be shortened in height
- shower bar diameter: 22 mm
- height-adjustable hand shower holder
- shower arm length: 350 mm
- water connection: Isiflex shower hose 80 cm
- connection dimension: DN15
- connection thread G ½
- suitable for continuous flow water heaters



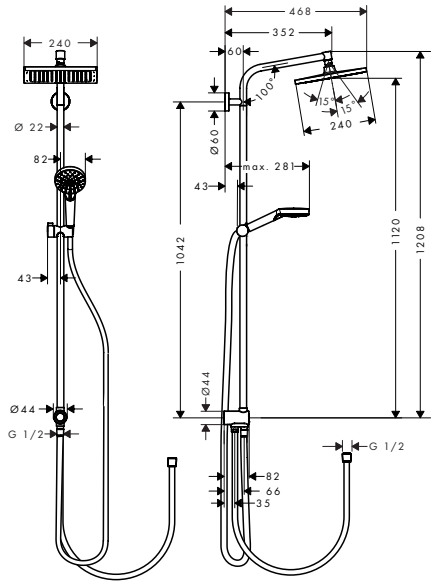

Sustainability

EcoSmart

Technologies

Quick Clean

XXL Performance

Spray types

Rain

Intense Rain

Certificates/declarations

EPD

Finish	Code no.
Chrome	27289000

Consisting of:		Included in	Code no.
	Crometta E Overhead shower 240 1jet EcoSmart 9 l/min	27289000	26727000
	Crometta Hand shower 100 Vario EcoSmart 9 l/min	27289000	26332400
	Isiflex Shower hose 160 cm	27289000	28276000
	Isiflex Shower hose B 80 cm	27289000	28278000

Optional parts:		Finish	Code no.
	Wall bar spacer for Croma 100 Showerpipe	Chrome	95239000

Measurements within scale drawings are in mm.
Technical specifications and units of measure are subject to change.

Vernis Blend Showerpipes 1jet with thermostat

Features of all variants

- spray type overhead shower: Rain
- spray type hand shower: Rain, IntenseRain
- ball-joint: overhead shower angle adjustable
- shower bar diameter: 19 mm
- height-adjustable slider with locking push-button slider
- shower arm length overhead shower: 426 mm
- thermostat Vernis
- safety stop at 40 °C
- adjustable hot water limitation
- outlets controlled via turning handle
- suitable for continuous flow water heaters
- mounting type: exposed installation
- connection dimension DN15
- connection thread G ½
- centre distance 150 ± 12 mm
- intrinsically safe against backflow
- 2 functions

240

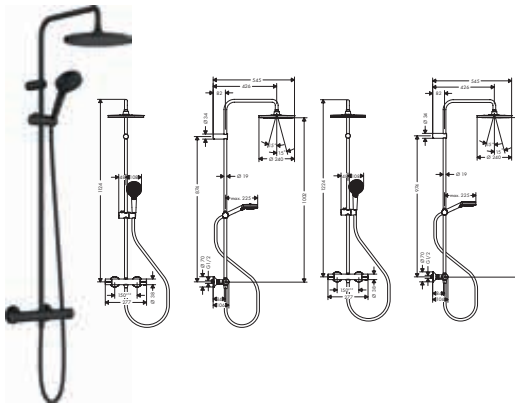

200

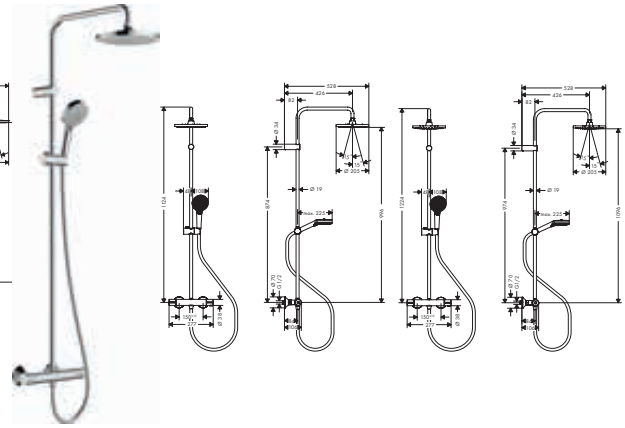

Sustainability

Eco Smart+ · EcoSmart

Technologies

Quick Clean · XXL Performance

Spray types

Rain · Intense Rain

Certificates/declarations

EPD

Overview variants

Shower head size	Number of sprays	Spray types	Max. flow rate at 3 bar (l/min)	Min. flow pressure (bar)	Finish	Code no.
240	1	Rain	8.7	1	Matt Black	26428670
240	1	Rain	15.8	1	Matt Black	26426670
200	1	Rain	5.7	1	Chrome	26318000
200	1	Rain	8.7	1	Chrome	26089000
					Matt Black	26089670
200	1	Rain	15.2	1	Chrome	26276000
					Matt Black	26276670
240	1	Rain	6.1	0.7	Chrome	26426007
200	1	Rain	10.7	0.7	Chrome	26276007

Consisting of:		Included in	Code no.
	Crometta S Overhead shower 240 1jet EcoSmart 9 l/min	26428670	26724670
	Crometta S Overhead shower 240 1jet	26426670	26723670
	Vernis Blend Overhead shower 200 1jet Green	26318000	26093000
	Vernis Blend Overhead shower 200 1jet EcoSmart	26089XXX	26277XXX
	Vernis Blend Overhead shower 200 1jet	26276XXX 26276CHN	26271XXX
	Vernis Blend Hand shower 100 Vario EcoSmart	26428670 26089XXX	26340XXX
	Vernis Blend Hand shower 100 Vario	26426670 26276XXX 26276CHN	26270XXX
	Vernis Blend Hand shower 100 Vario Green	26318000	26090000
	Isiflex Shower hose 160 cm	26428670 26426670 26089670	28276670
	Metaflex Shower hose 160 cm	26318000 26089000 26276000	28266000

Measurements within scale drawings are in mm.
Technical specifications and units of measure are subject to change.

Vernis Blend Showerpipes 1jet with bath thermostat

Features of all variants

- spray type overhead shower: Rain
- spray type hand shower: Rain, IntenseRain
- max. operating pressure: 10 bar
- ball-joint: overhead shower angle adjustable
- shower bar diameter: 19 mm
- height-adjustable slider with locking push-button slider
- shower arm length overhead shower: 426 mm
- thermostat Vernis
- safety stop at 40 °C
- adjustable hot water limitation
- outlets controlled via turning handle
- suitable for continuous flow water heaters
- mounting type: exposed installation
- connection dimension DN15
- connection thread G ½
- centre distance 150 ± 12 mm
- intrinsically safe against backflow
- 3 functions

240



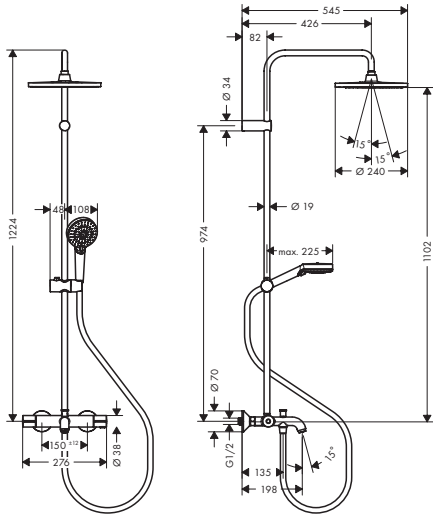

200



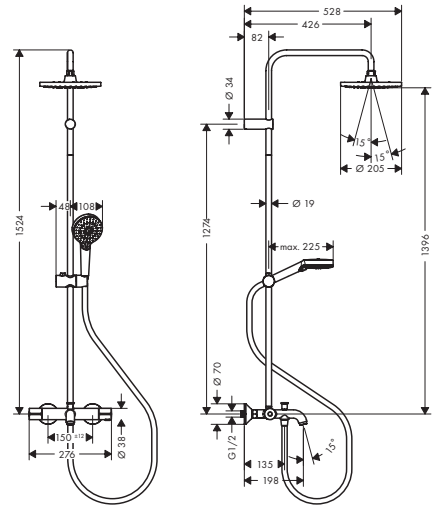

Sustainability

EcoSmart

Technologies

Quick Clean

XXL Performance

Spray types

Rain

Intense Rain

Certificates/declarations

EPD

Overview variants

Shower head size	Number of sprays	Spray types	Min. flow pressure (bar)	flow rate of hand shower at 3 bar (l/min)	flow rate for overhead shower at 3 bar (l/min)	flow rate for bath spout at 3 bar (l/min)	Thermostat	Finish	Code no.
200	1	Rain	1	8.7	8.7	20	Vernis	Chrome	26079000
200	1	Rain	1	15.2	12.4	20	Vernis	Chrome	26274000
240	1	Rain	1	10.5	8.7	20	Vernis	Chrome	26899007
								Matt Black	26899677
200	1	Rain	0.7	10	11.7	20	Vernis	Chrome	26274007
								Matt Black	26274677

Consisting of:		Included in	Code no.
	Vernis Blend Hand shower 100 Vario	26274CHN 26899677 26079000 26274XXX	26270XXX
	Vernis Blend Overhead shower 200 1jet	26079000 26274XXX 26274CHN	26271XXX
	Unica Shower bar Crometta 65 cm with Metaflex shower hose 160 cm	26079000	27615000
	Metaflex Shower hose 160 cm	26079000 26274000	28266000

Measurements within scale drawings are in mm.
Technical specifications and units of measure are subject to change.

Vernis Blend Showerpipes 1jet Reno

Features of all variants

- consists of: overhead shower, hand shower, shower hose, hand shower holder
- overhead shower Vernis Blend 200 1jet
- shower head size overhead shower: 205 mm
- spray type overhead shower: Rain
- spray type hand shower: Rain, IntenseRain
- minimum flow pressure: 1 bar
- max. operating pressure: 10 bar
- ball-joint: overhead shower angle adjustable
- mounting type: exposed installation
- shower bar diameter: 19 mm
- height-adjustable slider with locking push-button slider
- shower arm length: 400 mm
- water connection: Metaflex shower hose 80 cm and 160 cm
- connection dimension: DN15
- connection thread G ½
- suitable for continuous flow water heaters





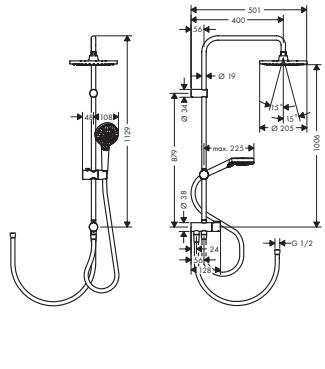

Sustainability

EcoSmart

Technologies

Quick Clean

XXL Performance

Spray types

Rain

Intense Rain

Overview variants

Shower head size	Number of sprays	Spray types	Max. flow rate at 3 bar (l/min)	Min. flow pressure (bar)	Finish	Code no.
200	1	Rain	8.7	1	Chrome	26099000
					Matt Black	26099670
200	1	Rain	15.2	1	Chrome	26272000
					Matt Black	26272670
200	1	Rain	15.3	1	Chrome	26272007
					Matt Black	26272677

Consisting of:		Included in	Code no.
	Vernis Blend Overhead shower 200 1jet EcoSmart	26099XXX	26277XXX
	Vernis Blend Overhead shower 200 1jet	26272XXX 26272CHN	26271XXX
	Vernis Blend Hand shower 100 Vario EcoSmart	26099XXX	26340XXX
	Vernis Blend Hand shower 100 Vario	26272XXX 26272CHN	26270XXX
	Metaflex Shower hose 160 cm	26099000 26272000	28266000
	Isiflex Shower hose B 80 cm	26099XXX 26272XXX	28278XXX
	Isiflex Shower hose 160 cm	26099670 26272670	28276670

Measurements within scale drawings are in mm.
Technical specifications and units of measure are subject to change.

Vernis Shape Showerpipes 1jet with thermostat

Features of all variants

- spray type overhead shower: Rain
- spray type hand shower: Rain, IntenseRain
- max. operating pressure: 10 bar
- ball-joint: overhead shower angle adjustable
- shower bar diameter: 19 mm
- height-adjustable slider with locking push-button slider
- shower arm length overhead shower: 426 mm
- thermostat Vernis
- safety stop at 40 °C
- adjustable hot water limitation
- outlets controlled via turning handle
- suitable for continuous flow water heaters
- mounting type: exposed installation
- connection dimension DN15
- connection thread G ½
- centre distance 150 ± 12 mm
- intrinsically safe against backflow
- 2 functions

240/240

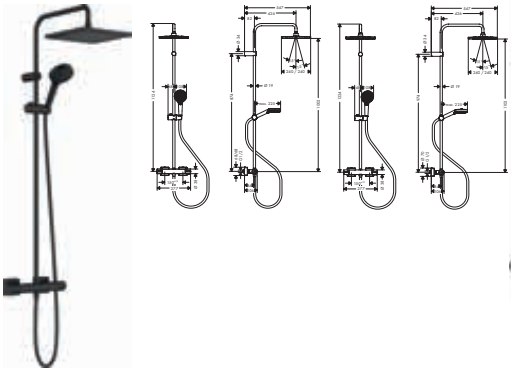

230/170

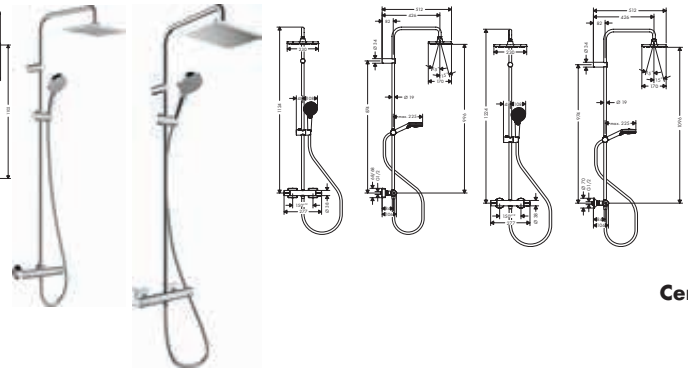

Sustainability

Eco Smart+ · EcoSmart

Technologies

Quick Clean · XXL Performance

Spray types

Rain · Intense Rain

Certificates/declarations

EPD

Overview variants

Shower head size	Number of sprays	Spray types	Max. flow rate at 3 bar (l/min)	Min. flow pressure (bar)	Finish	Code no.
240/240	1	Rain	8.7	1	Matt Black	26429670
240/240	1	Rain	15.8	1.3	Matt Black	26427670
230/170	1	Rain	5.7	1	Chrome	26319000
230/170	1	Rain	8.7	1	Chrome	26097000
					Matt Black	26097670
230/170	1	Rain	15.2	1	Chrome	26286000
					Matt Black	26286670
240/240	1	Rain	9.5	1	Matt Black	26427677
230/170	1	Rain	10.7	0.7	Chrome	26286007

Consisting of:		Included in	Code no.
	Crometta E Overhead shower 240 1jet	26429670 26427670	26726670
	Vernis Shape Overhead shower 230 1jet Green	26319000	26094000
	Vernis Shape Overhead shower 230 1jet EcoSmart	26097XXX	26283XXX
	Vernis Shape Overhead shower 230 1jet	26286XXX 26286CHN	26281XXX
	Vernis Blend Hand shower 100 Vario EcoSmart	26429670 26097XXX	26340XXX
	Vernis Blend Hand shower 100 Vario	26427XXX 26286XXX 26286CHN 26427CHN	26270XXX
	Vernis Blend Hand shower 100 Vario Green	26319000	26090000
	Isiflex Shower hose 160 cm	26429670 26427670 26097670	28276670
	Metaflex Shower hose 160 cm	26319000 26097000 26286000	28266000

Measurements within scale drawings are in mm.
Technical specifications and units of measure are subject to change.

Vernis Shape Showerpipes 1jet with bath thermostat

Features of all variants

- spray type overhead shower: Rain
- spray type hand shower: Rain, IntenseRain
- maximum flow rate for Showerpipe at 3 bar: 20 l/min
- max. operating pressure: 10 bar
- ball-joint: overhead shower angle adjustable
- shower bar diameter: 19 mm
- height-adjustable slider with locking push-button slider
- shower arm length overhead shower: 426 mm
- thermostat Vernis
- safety stop at 40 °C
- adjustable hot water limitation
- outlets controlled via turning handle
- suitable for continuous flow water heaters
- mounting type: exposed installation
- connection dimension DN15
- connection thread G ½
- centre distance 150 ± 12 mm
- intrinsically safe against backflow
- 3 functions

240/240

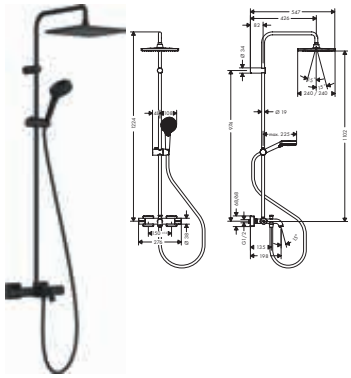

230/170

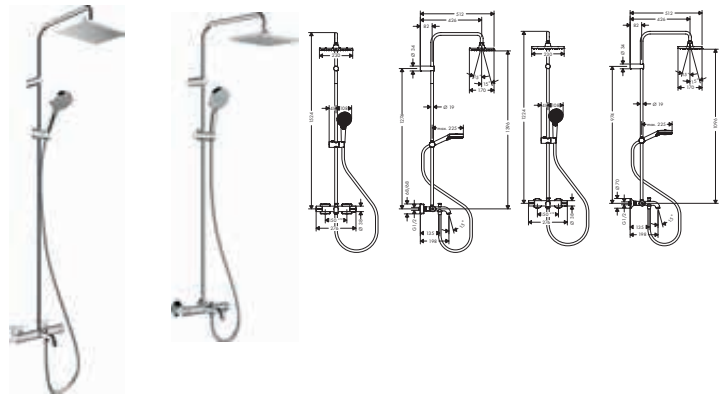

Sustainability

EcoSmart

Technologies

Quick Clean

XXL Performance

Spray types

Rain

Intense Rain

Certificates/declarations

EPD

Overview variants

Shower head size	Number of sprays	Spray types	Min. flow pressure (bar)	flow rate of hand shower at 3 bar (l/min)	flow rate for overhead shower at 3 bar (l/min)	flow rate for bath spout at 3 bar (l/min)	Thermostat	Finish	Code no.
230/170	1	Rain	1	8.7	8.7	20	Vernis	Chrome	26098000
230/170	1	Rain	1	15.2	12.4	20	Vernis	Chrome	26284000
240/240	1	Rain	1	10.5	12	20	Vernis	Chrome	26900007
								Matt Black	26900677
230/170	1	Rain	0.7	10	11.7	20	Vernis	Chrome	26284007
								Matt Black	26284677

Consisting of:		Included in	Code no.
	Vernis Blend Hand shower 100 Vario	26284CHN 26900677 26098000 26284XXX	26270XXX
	Vernis Shape Overhead shower 230 1jet	26098000 26284XXX 26284CHN	26281XXX
	Unica Shower bar Crometta 65 cm with Metaflex shower hose 160 cm	26098000 26284000	27615000
	Metaflex Shower hose 160 cm	26098000 26284000	28266000

Measurements within scale drawings are in mm.
Technical specifications and units of measure are subject to change.

Vernis Shape Showerpipes 1jet Reno

Features of all variants

- consists of: overhead shower, hand shower, shower hose, hand shower holder
- overhead shower Vernis Shape 230 1jet
- shower head size overhead shower: 230 x 170 mm
- spray type overhead shower: Rain
- spray type hand shower: Rain, IntenseRain
- minimum flow pressure: 1 bar
- max. operating pressure: 10 bar
- ball-joint: overhead shower angle adjustable
- mounting type: exposed installation
- shower bar diameter: 19 mm
- height-adjustable slider with locking push-button slider
- shower arm length: 400 mm
- water connection: Metaflex shower hose 80 cm and 160 cm
- connection dimension: DN15
- connection thread G ½
- suitable for continuous flow water heaters





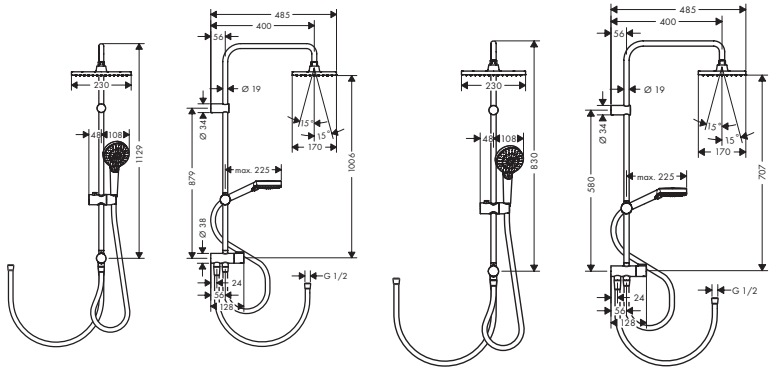

Sustainability

EcoSmart

Technologies

Quick Clean

XXL Performance

Spray types

Rain

Intense Rain

Overview variants

Shower head size	Number of sprays	Spray types	Max. flow rate at 3 bar (l/min)	Min. flow pressure (bar)	Finish	Code no.
230/170	1	Rain	8.7	1	Chrome	26289000
					Matt Black	26289670
230/170	1	Rain	15.2	1	Chrome	26282000
					Matt Black	26282670
230	1	Rain	15.3	1	Chrome	26282007
					Matt Black	26282677

Consisting of:	Included in	Code no.
Vernis Shape Overhead shower 230 1jet EcoSmart	26289XXX	26283XXX
Vernis Shape Overhead shower 230 1jet	26282XXX 26282CHN	26281XXX
Vernis Blend Hand shower 100 Vario EcoSmart	26289XXX	26340XXX
Vernis Blend Hand shower 100 Vario	26282XXX 26282CHN	26270XXX
Metaflex Shower hose 160 cm	26289000 26282000	28266000
Isiflex Shower hose B 80 cm	26289XXX 26282XXX	28278XXX
Isiflex Shower hose 160 cm	26289670 26282670	28276670

Measurements within scale drawings are in mm.
Technical specifications and units of measure are subject to change.

Raindance Shower panel Lift 180 2jet for exposed installation

Features

- consists of: shower panel, overhead shower, baton hand shower, shower hose, shower holder
- overhead shower Raindance S 180 Air
- shower head size: 180 mm
- spray type overhead shower: RainAir, wide flood jet
- flow rate RainAir spray (at 3 bar): 14 l/min
- flow rate RainFlow spray (at 3 bar): 17 l/min
- shower arm length: 420 mm
- adjustable height: 200 mm
- minimum flow pressure: 2,2 bar
- scald protection at 40°
- adjustable hot water limitation
- isolated water conduction
- centre distance: 150 ± 12 mm
- connection thread G ½
- site: wall
- mounting type: exposed installation
- suitable for continuous flow water heaters
- connection dimension: DN15
- max. operating pressure: 10 bar
- maximum flow rate at 3 bar: 22 l/min



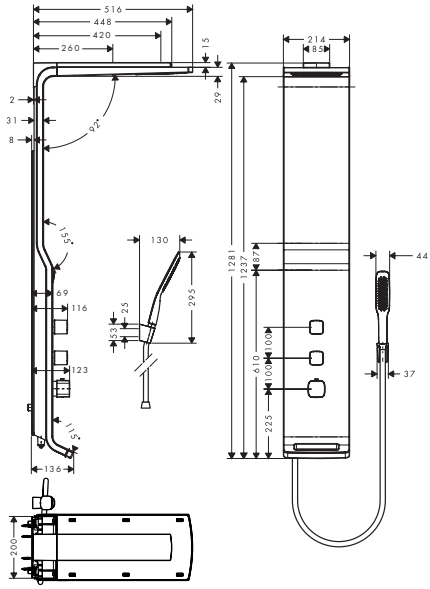

Technologies



Spray types



Finish	Code no.
White/Chrome	27008400

Consisting of:		Included in	Code no.
	Isiflex Shower hose 160 cm	27008XXX	28276000
	Shower holder Porter S	27008XXX	28331000

Optional parts:		Code no.
	Raindance Corner fitting set for shower panel Lift 180 2jet for exposed installation	27999000

Measurements within scale drawings are in mm.
Technical specifications and units of measure are subject to change.



Drains

RainDrain Flex Finish sets shower drains cuttable

Features of all variants

- consists of: design grate with removable cover, Dryphon
- mounting type: two-sided
- can be shortened on site
- easy to clean surface
- height adjustable by 10 mm
- up to 60 l/min drainage capacity
- where to use: new construction, renovation
- grate removal tool allows easy removal of the finish set
- with integrated slope
- type of odour seal: mechanical
- Dryphon enables waterless siphon system
- minimal installation height: 67 mm (flat uBox), 102 mm (standard uBox)
- grate material: Stainless Steel 304 (1.4301)
- suitable for primary drainage

700 - 1200



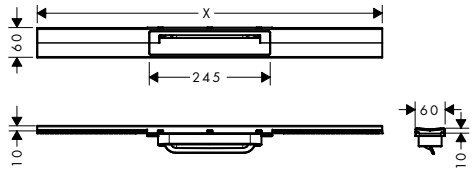

Technologies



Installation



Overview variants

Length (mm)	Finish	Code no.
700	Brushed Stainless Steel	56043800
	Matt Black	56043670
	Matt White	56043700
	Chrome	56043000
	Brushed Bronze	56043140
	Brushed Black Chrome	56043340
	Polished Gold Optic	56043990
800	Brushed Stainless Steel	56044800
	Matt Black	56044670
	Matt White	56044700
	Chrome	56044000
	Brushed Bronze	56044140
	Brushed Black Chrome	56044340
	Polished Gold Optic	56044990
900	Brushed Stainless Steel	56045800
	Matt Black	56045670
	Matt White	56045700
	Chrome	56045000
	Brushed Bronze	56045140
	Brushed Black Chrome	56045340
	Polished Gold Optic	56045990
1000	Brushed Stainless Steel	56046800
	Matt Black	56046670
	Matt White	56046700
	Chrome	56046000
	Brushed Bronze	56046140
	Brushed Black Chrome	56046340
	Polished Gold Optic	56046990

Measurements within scale drawings are in mm.
Technical specifications and units of measure are subject to change.

RainDrain Flex Finish sets shower drains cuttable

Overview variants

Length (mm)	Finish	Code no.
1200	Brushed Stainless Steel	56047800
	Matt Black	56047670
	Matt White	56047700
	Chrome	56047000
	Brushed Bronze	56047140
	Brushed Black Chrome	56047340
	Polished Gold Optic	56047990

Required parts (choose one):		Code no.
	uBox universal Base set for finish sets for standard installation	01001180
	uBox universal Base set for finish sets for flat installation	01000180
	uBox universal Base set for finish sets for vertical installation	01002180

Optional parts:		Code no.
	Soundproofing mat	94636000

RainDrain Flex Finish sets shower drains cuttable for wall mounting

Features of all variants

- consists of: design grate with removable cover, Dryphon, sealing membrane
- mounting type: wall-mounted
- can be shortened on site
- easy to clean surface
- height adjustable by 10 mm
- up to 60 l/min drainage capacity
- where to use: new construction, renovation
- grate removal tool allows easy removal of the finish set
- with integrated slope
- type of odour seal: mechanical
- Dryphon enables waterless siphon system
- minimal installation height: 67 mm (flat uBox), 102 mm (standard uBox)
- grate material: Stainless Steel 304 (1.4301)
- suitable for primary drainage

700 - 1200



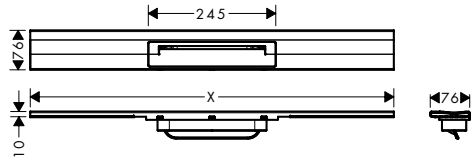

Technologies



Installation



Overview variants

Length (mm)	Finish	Code no.
700	Brushed Stainless Steel	56050800
	Matt Black	56050670
	Matt White	56050700
	Chrome	56050000
	Brushed Bronze	56050140
	Brushed Black Chrome	56050340
	Polished Gold Optic	56050990

For more information about this product, please see the next page.

RainDrain Flex Finish sets shower drains cuttable for wall mounting

Overview variants

Length (mm)	Finish	Code no.
800	Brushed Stainless Steel	56051800
	Matt Black	56051670
	Matt White	56051700
	Chrome	56051000
	Brushed Bronze	56051140
	Brushed Black Chrome	56051340
	Polished Gold Optic	56051990
900	Brushed Stainless Steel	56052800
	Matt Black	56052670
	Matt White	56052700
	Chrome	56052000
	Brushed Bronze	56052140
	Brushed Black Chrome	56052340
	Polished Gold Optic	56052990
1000	Brushed Stainless Steel	56053800
	Matt Black	56053670
	Matt White	56053700
	Chrome	56053000
	Brushed Bronze	56053140
	Brushed Black Chrome	56053340
	Polished Gold Optic	56053990
1200	Brushed Stainless Steel	56054800
	Matt Black	56054670
	Matt White	56054700
	Chrome	56054000
	Brushed Bronze	56054140
	Brushed Black Chrome	56054340
	Polished Gold Optic	56054990

Required parts (choose one):		Code no.
	uBox universal Base set for finish sets for standard installation	01001180
	uBox universal Base set for finish sets for flat installation	01000180
	uBox universal Base set for finish sets for vertical installation	01002180

Optional parts:		Code no.
	Soundproofing mat	94636000

Measurements within scale drawings are in mm.
Technical specifications and units of measure are subject to change.

RainDrain Match Finish sets shower drains with height adjustable frame

Features of all variants

- consists of: design grate, height adjustable frame, wall installation flange, Dryphon
- mounting type: wall-mounted, free in the floor
- tileable on the back side
- easy to clean surface
- easy adjustment to tile thickness with height adjustable frame (7 – 18 mm)
- tile thickness: up to 18 mm
- suitable for any type of tile
- up to 60 l/min drainage capacity
- where to use: new construction, renovation
- grate removal tool allows easy removal of the finish set
- type of odour seal: mechanical
- Dryphon enables waterless siphon system
- minimal installation height: 84 mm (flat uBox), 102 mm (standard uBox)
- wall mounting possible
- tile inlay depth: 12 mm
- grate material: Stainless Steel 304 (1.4301)
- suitable for primary and secondary drainage
- frame width: 62 mm

600 - 1200



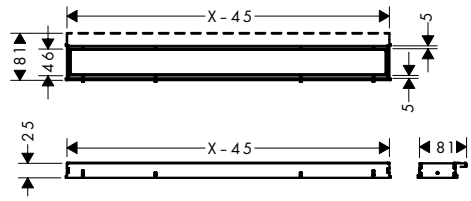

Technologies



Installation



Overview variants

Length (mm)	Finish	Code no.
600	Brushed Stainless Steel	56036800
	Matt Black	56036670
	Matt White	56036700
	Chrome	56036000
	White	56036450
	Black	56036610
700	Brushed Stainless Steel	56037800
	Matt Black	56037670
	Matt White	56037700
	Chrome	56037000
	White	56037450
	Black	56037610
800	Brushed Stainless Steel	56038800
	Matt Black	56038670
	Matt White	56038700
	Chrome	56038000
	White	56038450
	Black	56038610
900	Brushed Stainless Steel	56040800
	Matt Black	56040670
	Matt White	56040700
	Chrome	56040000
	White	56040450
	Black	56040610
1000	Brushed Stainless Steel	56041800
	Matt Black	56041670
	Matt White	56041700
	Chrome	56041000
	White	56041450
	Black	56041610

For more information about this product, please see the next page.

Measurements within scale drawings are in mm.
Technical specifications and units of measure are subject to change.

RainDrain Match Finish sets shower drains with height adjustable frame

Overview variants

	Length (mm)	Finish	Code no.
	1200	Brushed Stainless Steel	56042800
		Matt Black	56042670
		Matt White	56042700
		Chrome	56042000
		White	56042450
		Black	56042610

56036610 56036450 56037610 56037450 56038610 56038450 56040610 56040450 56041610 56041450 56042610 56042450	No tileable rear cover.

Required parts (choose one):		For	Code no.
	uBox universal Complete set for standard installation - 600 for shower drains finish sets	56036XXX	56022180
	uBox universal Complete set for flat installation - 600 for shower drains finish sets	56036XXX	56016180
	uBox universal Complete set for standard installation - 700 for shower drains finish sets	56037XXX	56023180
	uBox universal Complete set for flat installation - 700 for shower drains finish sets	56037XXX	56017180
	uBox universal Complete set for standard installation - 800 for shower drains finish sets	56038XXX	56024180
	uBox universal Complete set for flat installation - 800 for shower drains finish sets	56038XXX	56018180
	uBox universal Complete set for standard installation - 900 for shower drains finish sets	56040XXX	56025180
	uBox universal Complete set for flat installation - 900 for shower drains finish sets	56040XXX	56019180
	uBox universal Complete set for standard installation - 1000 for shower drains finish sets	56041XXX	56026180
	uBox universal Complete set for flat installation - 1000 for shower drains finish sets	56041XXX	56020180
	uBox universal Complete set for standard installation - 1200 for shower drains finish sets	56042XXX	56027180
	uBox universal Complete set for flat installation - 1200 for shower drains finish sets	56042XXX	56021180

Optional parts:		Code no.
	Soundproofing mat	94636000

Measurements within scale drawings are in mm.
Technical specifications and units of measure are subject to change.

RainDrain Rock Finish sets shower drains cuttable and tileable

Features of all variants

- consists of: tileable grate, grate removal tool, Dryphon
- mounting type: free in the floor, two-sided
- can be shortened on site
- frameless design
- height adjustable grate
- tile thickness: up to 40 mm
- suitable for every type of tile and tile thickness
- up to 60 l/min drainage capacity
- where to use: new construction, renovation
- grate removal tool allows easy removal of the finish set
- easy to clean
- type of odour seal: mechanical
- Dryphon enables waterless siphon system
- minimal installation height: 77 mm (flat uBox), 95 mm (standard uBox)
- 50 mm excess length on both sides which can be shortened
- grate material: Stainless Steel 304 (1.4301)
- suitable for primary drainage

600



700



800



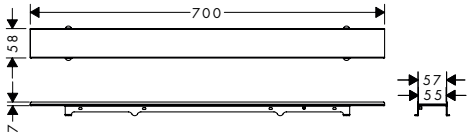

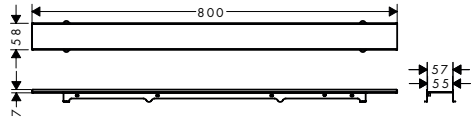

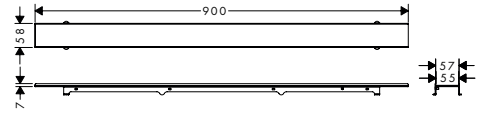

Technologies

Dryphon

Installation

Resizable Cover Length | Two-sided Installation | In-floor Installation

Overview variants

Length (mm)	Code no.
600	56029000
700	56030000
800	56031000

Required parts (choose one):	For	Code no.
uBox universal Complete set for standard installation - 600 for shower drains finish sets	56029XXX	56022180
uBox universal Complete set for flat installation - 600 for shower drains finish sets	56029XXX	56016180
uBox universal Complete set for standard installation - 700 for shower drains finish sets	56030XXX	56023180
uBox universal Complete set for flat installation - 700 for shower drains finish sets	56030XXX	56017180
uBox universal Complete set for standard installation - 800 for shower drains finish sets	56031XXX	56024180
uBox universal Complete set for flat installation - 800 for shower drains finish sets	56031XXX	56018180

Optional parts:	Code no.
Soundproofing mat	94636000

Measurements within scale drawings are in mm.
Technical specifications and units of measure are subject to change.

RainDrain Rock Finish sets shower drains cuttable and tileable

Features of all variants

- consists of: tileable grate, grate removal tool, Dryphon
- mounting type: free in the floor, two-sided
- can be shortened on site
- frameless design
- height adjustable grate
- tile thickness: up to 40 mm
- suitable for every type of tile and tile thickness
- up to 60 l/min drainage capacity
- where to use: new construction, renovation
- grate removal tool allows easy removal of the finish set
- easy to clean
- type of odour seal: mechanical
- Dryphon enables waterless siphon system
- minimal installation height: 77 mm (flat uBox), 95 mm (standard uBox)
- 50 mm excess length on both sides which can be shortened
- grate material: Stainless Steel 304 (1.4301)
- suitable for primary drainage

900



1000



1200



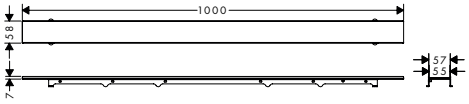

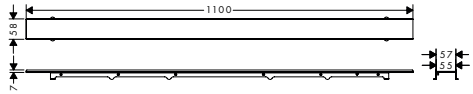

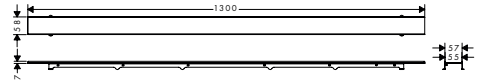

Technologies



Installation



Overview variants

Length (mm)	Code no.
900	56032000
1000	56033000
1200	56034000

Required parts (choose one):	For	Code no.
 uBox universal Complete set for standard installation - 900 for shower drains finish sets	56032XXX	56025180
 uBox universal Complete set for flat installation - 900 for shower drains finish sets	56032XXX	56019180
 uBox universal Complete set for standard installation - 1000 for shower drains finish sets	56033XXX	56026180
 uBox universal Complete set for flat installation - 1000 for shower drains finish sets	56033XXX	56020180
 uBox universal Complete set for standard installation - 1200 for shower drains finish sets	56034XXX	56027180
 uBox universal Complete set for flat installation - 1200 for shower drains finish sets	56034XXX	56021180

Optional parts:	Code no.
 Soundproofing mat	94636000

Measurements within scale drawings are in mm.
Technical specifications and units of measure are subject to change.

RainDrain Original Finish sets shower drains

Features of all variants

- consists of: finish set shower drain, installation set, Dryphon, sealing membrane, grate removal tool
- mounting type: free in the floor
- frameless design
- easy to clean surface
- height adjustable by 10 mm
- tile thickness: up to 18 mm
- up to 49 l/min drainage capacity
- where to use: renovation, new construction
- grate removal tool allows easy removal of the finish set
- type of odour seal: mechanical
- Dryphon enables waterless siphon system
- installation on the screed
- grate material: Stainless Steel 304 (1.4301)

600 - 1200



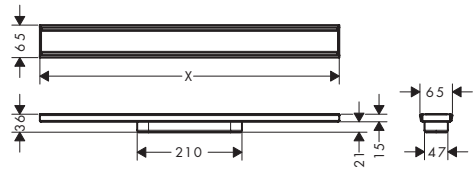

Technologies

Dryphon

Quick Clean

Installation

In-floor Installation

Overview variants

	Length (mm)	Finish	Code no.
	600	Brushed Stainless Steel	56196800
	700	Brushed Stainless Steel	56197800
	800	Brushed Stainless Steel	56198800
	900	Brushed Stainless Steel	56199800
	1000	Brushed Stainless Steel	56200800
	1200	Brushed Stainless Steel	56201800

Required parts (choose one):		Code no.
	uBox universal Base set for finish sets for standard installation	01001180
	uBox universal Base set for finish sets for flat installation	01000180
	uBox universal Base set for finish sets for vertical installation	01002180

Optional parts:		Code no.
	Soundproofing mat	94636000

Measurements within scale drawings are in mm.
Technical specifications and units of measure are subject to change.

RainDrain Compact Complete sets shower drains for flat installation

Features of all variants

- consists of: finish set shower drain, installation set, siphon, grate removal tool, pre-assembled sealing membrane
- grate material: Stainless Steel 304 (1.4301)
- material installation set: Stainless Steel 304 (1.4301)
- pre-assembled sealing membrane
- water seal: 30 mm
- connection diameter: DN40
- direction of outlet: horizontal
- easy to clean surface
- height adjustable installation set
- up to 27 l/min drainage capacity
- where to use: renovation, new construction
- tile thickness: up to 18 mm
- removable water seal
- easy to clean siphon
- grate removal tool allows easy removal of the finish set
- type of odour seal: fluid
- minimal installation height 43 mm
- material siphon: ABS
- mounting type: free in the floor
- suitable for primary drainage
- minimal installation height: 63 mm

600 - 1200



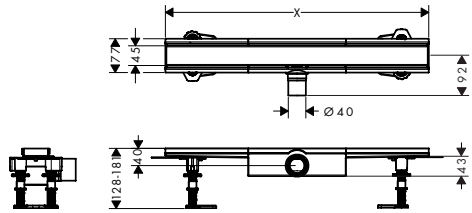

Technologies

Quick Clean

Easy Clean Siphon

Installation

In-floor Installation

Overview variants

	Length (mm)	Finish	Code no.
	600	Brushed Stainless Steel	56162800
	700	Brushed Stainless Steel	56164800
	800	Brushed Stainless Steel	56166800
	900	Brushed Stainless Steel	56168800
	1000	Brushed Stainless Steel	56170800
	1200	Brushed Stainless Steel	56172800

Optional parts:		Code no.
	Soundproofing mat	94636000

Measurements within scale drawings are in mm.
Technical specifications and units of measure are subject to change.

RainDrain Compact Complete sets shower drains tileable for flat installation

Features of all variants

- consists of: tileable grate, installation set, siphon, grate removal tool, pre-assembled sealing membrane
- grate material: Stainless Steel 304 (1.4301)
- material installation set: Stainless Steel 304 (1.4301)
- pre-assembled sealing membrane
- water seal: 30 mm
- connection diameter: DN40
- direction of outlet: horizontal
- easy to clean surface
- height adjustable installation set
- up to 27 l/min drainage capacity
- where to use: renovation, new construction
- tile thickness: up to 18 mm
- removable water seal
- easy to clean siphon
- grate removal tool allows easy removal of the finish set
- type of odour seal: fluid
- minimal installation height 43 mm
- material siphon: ABS
- mounting type: free in the floor
- tile inlay depth: 12 mm
- suitable for primary drainage
- minimal installation height: 63 mm

600 - 1200



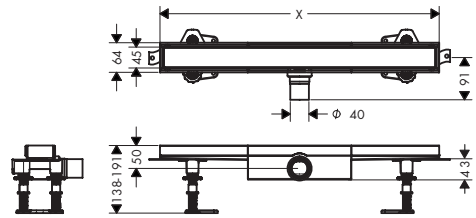

Technologies

Quick Clean | Easy Clean Siphon

Installation

In-floor Installation

Overview variants

Length (mm)	Code no.
600	56163000
700	56165000
800	56167000
900	56169000
1000	56171000
1200	56173000

Optional parts:	Code no.
Soundproofing mat	94636000

RainDrain Spot Complete set point drain 150/150

Features

- consists of: design grate, base set, siphon, pre-assembled sealing membrane, screed protection cover
- grate material: Stainless Steel 304 (1.4301)
- pre-assembled sealing membrane
- water seal: 50 mm
- connection diameter: DN40
- direction of outlet: pre-assembled horizontally, can be used vertically
- easy to clean surface
- height adjustable by 10 mm
- up to 35 l/min drainage capacity
- where to use: new construction, renovation
- removable water seal
- rotatable and adjustable siphon body
- easy to clean siphon
- type of odour seal: fluid
- minimal installation height 80 mm
- material siphon: ABS
- mounting type: free in the floor



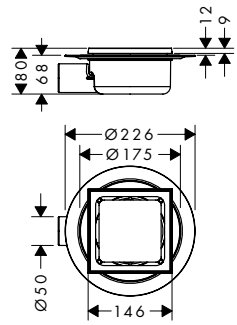

Technologies

Quick Clean | Easy Clean Siphon

Finish	Code no.
Brushed Stainless Steel	56055800

Optional parts:	Code no.
RainDrain Spot Height compensation supplementary piece	56056000

For more information about this product, please see the next page.

Measurements within scale drawings are in mm.
Technical specifications and units of measure are subject to change.

RainDrain Spot Complete set point drain 150/150

Optional parts:		Code no.
	Fire protection adapter (HT PP socket DN 50)	94343000
	Soundproofing mat	94636000

RainDrain Spot Complete set point drain 150/150 tileable rear cover

Features

- consists of: design grate, base set, siphon, pre-assembled sealing membrane, screed protection cover
- grate material: Stainless Steel 304 (1.4301)
- pre-assembled sealing membrane
- tileable on the back side
- water seal: 50 mm
- connection diameter: DN40
- direction of outlet: pre-assembled horizontally, can be used vertically
- easy to clean surface
- height adjustable by 10 mm
- up to 35 l/min drainage capacity
- where to use: new construction, renovation
- removable water seal
- rotatable and adjustable siphon body
- easy to clean siphon
- type of odour seal: fluid
- minimal installation height 95 mm
- material siphon: ABS
- mounting type: free in the floor
- tile inlay depth: 12 mm



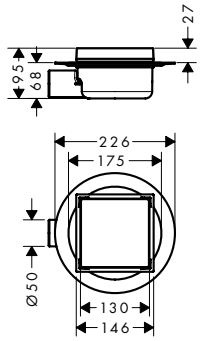

Technologies



Installation



Finish	Code no.
Brushed Stainless Steel	56112800

Optional parts:		Code no.
	RainDrain Spot Height compensation supplementary piece	56056000
	Fire protection adapter (HT PP socket DN 50)	94343000
	Soundproofing mat	94636000

RainDrain Spot Height compensation supplementary piece

Features

- suitable for all RainDrain Spot point drains



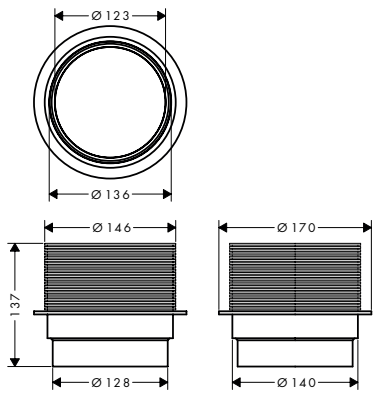

Code no.
56056000

Measurements within scale drawings are in mm.
Technical specifications and units of measure are subject to change.

RainDrain Point Complete sets point drain

Features of all variants

- consists of: point drain, installation set, pre-assembled sealing membrane, base set, siphon, screed protection cover
- grate material: Stainless Steel 304 (1.4301)
- pre-assembled sealing membrane
- water seal: up to max. 50 mm
- connection diameter: DN40
- direction of outlet: horizontal
- easy to clean surface
- height adjustable by 10 mm
- where to use: new construction, renovation
- tile thickness: up to 18 mm
- removable water seal
- rotatable and adjustable siphon body
- easy to clean siphon
- grate removal tool allows easy removal of the finish set
- with removable hair strainer
- type of odour seal: fluid
- minimal installation height 54 mm
- material siphon: ABS
- mounting type: free in the floor
- simplified installation due to the cutable siphon
- suitable for primary drainage

100/100



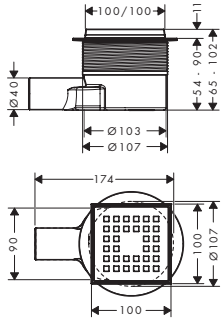

150/150



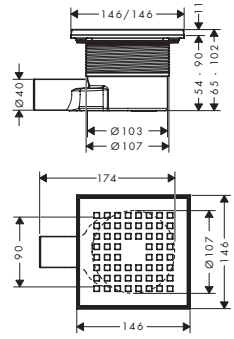

Technologies

Quick Clean | Easy Clean Siphon

Installation

In-floor Installation

Overview variants

drainage capacity	Product dimensions (mm)	Finish	Code no.
up to 41 l/min	100/100	Brushed Stainless Steel	56246800
up to 45 l/min	150/150	Brushed Stainless Steel	56248800

Optional parts:	Code no.
Soundproofing mat	94636000

RainDrain Point Complete sets point drain

Features of all variants

- consists of: point drain, installation set, pre-assembled sealing membrane, base set, siphon, screed protection cover
- grate material: Stainless Steel 304 (1.4301)
- pre-assembled sealing membrane
- tileable on the back side
- connection diameter: DN40
- direction of outlet: horizontal
- easy to clean surface
- height adjustable by 10 mm
- where to use: new construction, renovation
- tile thickness: up to 18 mm
- removable water seal
- rotatable and adjustable siphon body
- easy to clean siphon
- grate removal tool allows easy removal of the finish set
- with removable hair strainer
- type of odour seal: fluid
- material siphon: ABS
- mounting type: free in the floor
- simplified installation due to the cutable siphon
- tile inlay depth: 12 mm
- suitable for primary drainage

100/100



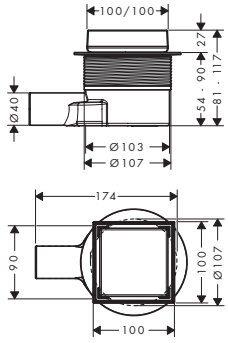

150/150



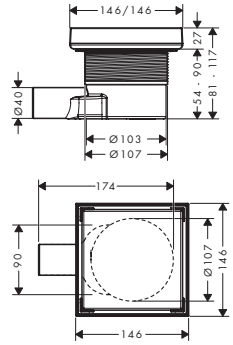

Technologies

Quick Clean | Easy Clean Siphon

Installation

In-floor Installation

Overview variants

drainage capacity	Product dimensions (mm)	Finish	Code no.
up to 41 l/min	100/100	Brushed Stainless Steel	56247800
		Matt Black	56247670

For more information about this product, please see the next page.

Measurements within scale drawings are in mm.
Technical specifications and units of measure are subject to change.

RainDrain Point Complete sets point drain

Overview variants

drainage capacity	Product dimensions (mm)	Finish	Code no.
up to 45 l/min	150/150	Brushed Stainless Steel	56249800
		Matt Black	56249670

Optional parts:	Code no.
Soundproofing mat	94636000

RainDrain Board Tileable shower element 1000/1000 with installation set

Features

- consists of: slope board, substructure element, pre-assembled sealing membrane
- material bottom layer: hard foam
- material top layer: hard foam
- where to use: new construction, renovation
- with integrated slope: with integrated slope (1,2%)
- cuttable to the designed length and width
- slope: 12 mm
- pre-assembled sealing membrane
- integrated slope that is ready to be tiled
- suitable for finish sets RainDrain Flex (floor mounted) up to 1000 mm and RainDrain Original 900 mm



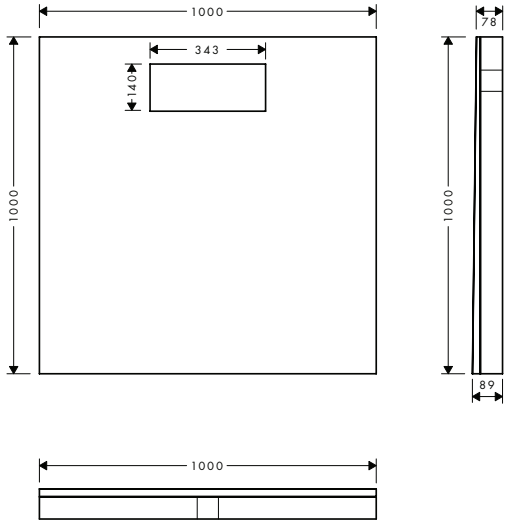

Available from	Code no.
Q1/2024	56256000

Measurements within scale drawings are in mm.
Technical specifications and units of measure are subject to change.

Raindrain Complete set waste set 90 XXL

Features

- consists of: basic set, finish set
- suitable for shower trays with Ø 90 mm waste outlet
- drainage capacity 51 l/min at 15 mm water level
- waste pipe Ø 50 mm
- odour trap - backwater height is 50 mm
- opening for cleaning
- material siphon: plastic
- material of drain plug: stainless steel



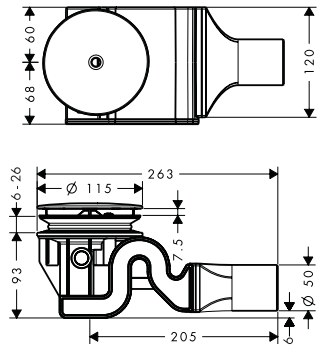

Finish	Code no.
Chrome	60067000

Staro Complete set waste set 90

Features

- consists of: basic set, finish set
- suitable for shower trays with Ø 90 mm waste outlet
- drainage capacity 29 l/min at 15 mm water level
- PE screw connection G 1½ x 40/ 50 mm
- waste pipe Ø 50 mm
- odour trap - backwater height is 50 mm
- self-cleaning
- material siphon: plastic
- material of drain plug: stainless steel



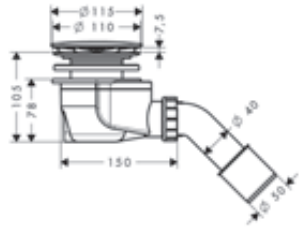

Finish	Code no.
Chrome	60056000

uBox universal Base set for finish sets for standard installation

Features

- consists of: base set, siphon, pre-assembled sealing membrane, height adjustment boards, screed protection cover
- suitable for RainDrain Match, Flex, Rock and Original finish sets
- where to use: new construction, renovation
- water seal: 50 mm
- minimum construction height: 75 mm
- drainage capacity with siphon: up to 42 l/min
- drainage capacity with Dryphon: up to 60 l/min
- connection diameter: DN50
- direction of outlet: horizontal
- connection: 3-sided
- easy fixation to the floor with mounting bracket
- height adjustable with the foam boards
- mounting type: wall-mounted, free in the floor
- easy to clean siphon
- removable siphon
- suitable for soundproof mounting



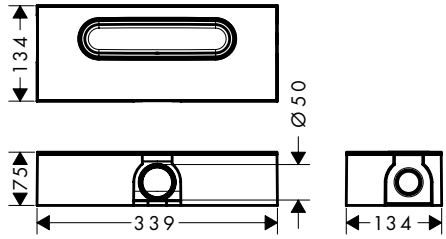

Technologies

High Drainage Capacity 60 l/min

Easy Clean Siphon

Installation

Water Damage Protection

Code no.
01001180

Optional parts:	Code no.
Wall mounting set	94345000

uBox universal Base set for finish sets for flat installation

Features

- consists of: base set, siphon, pre-assembled sealing membrane, height adjustment boards, screed protection cover
- suitable for RainDrain Match, Flex, Rock and Original finish sets
- where to use: new construction, renovation
- water seal: 30 mm
- minimum construction height: 57 mm
- drainage capacity with siphon: up to 33 l/min
- drainage capacity with Dryphon: up to 55 l/min
- connection diameter: DN40
- direction of outlet: horizontal
- connection: 3-sided
- easy fixation to the floor with mounting bracket
- height adjustable with the foam boards
- mounting type: wall-mounted, free in the floor
- easy to clean siphon
- removable siphon
- suitable for soundproof mounting



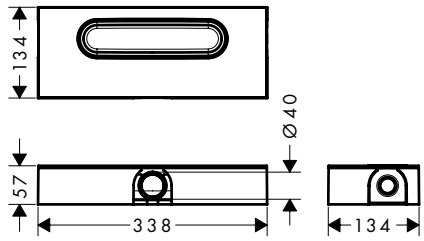

Technologies

Easy Clean Siphon

Installation

Water Damage Protection

Code no.
01000180

Optional parts:	Code no.
Wall mounting set	94345000

Measurements within scale drawings are in mm.
Technical specifications and units of measure are subject to change.

uBox universal Base set for finish sets for vertical installation

Features

- consists of: base set, siphon, pre-assembled sealing membrane, screed protection cover
- suitable for RainDrain Match, Flex, Rock and Original finish sets
- where to use: new construction, renovation
- water seal: 50 mm
- minimum construction height: 75 mm
- drainage capacity with siphon: up to 42 l/min
- drainage capacity with Dryphon: up to 60 l/min
- connection diameter: DN50
- direction of outlet: vertical
- connection: 1-sided
- mounting type: wall-mounted, free in the floor
- easy to clean siphon
- removable siphon



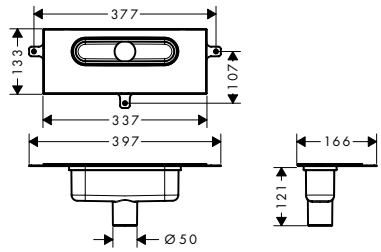

Technologies

Installation

	Code no.
	01002180

Optional parts:		Code no.
	Fire protection adapter (HT PP socket DN 50)	94343000
	Wall mounting set	94345000

RainDrain Installation sets

Features of all variants

- consists of: installation set, pre-assembled sealing membrane, height adjustment feet, tiling aid
- suitable for all RainDrain Rock and RainDrain Match finish sets
- where to use: new construction, renovation
- incl. height adjustment feet and tiling aid for installation
- with integrated slope
- material installation set: Stainless Steel 304 (1.4301)

600 - 1200

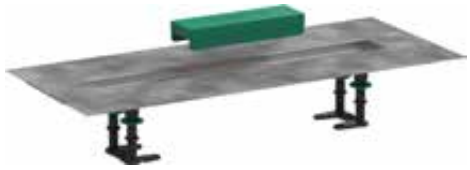

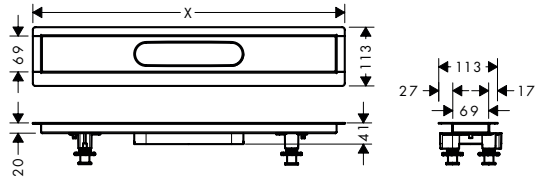

Overview variants

Length (mm)	Code no.
600	56010180
700	56011180
800	56012180
900	56013180
1000	56014180
1200	56015180

Required parts (choose one):		Code no.
	uBox universal Base set for finish sets for standard installation	01001180
	uBox universal Base set for finish sets for flat installation	01000180
	uBox universal Base set for finish sets for vertical installation	01002180

Measurements within scale drawings are in mm.
Technical specifications and units of measure are subject to change.

uBox universal Complete sets for standard installation

Features of all variants

- consists of: installation set, base set, pre-assembled sealing membrane, siphon, height adjustment boards
- suitable for all RainDrain Rock and RainDrain Match finish sets
- where to use: new construction, renovation
- water seal: 50 mm
- drainage capacity with siphon: up to 42 l/min
- drainage capacity with Dryphon: up to 60 l/min
- connection diameter: DN50
- direction of outlet: horizontal
- connection: 3-sided
- incl. height adjustment feet and tiling aid for installation
- easy fixation to the floor with mounting bracket
- height adjustable with the foam boards
- with integrated slope
- mounting type: wall-mounted, free in the floor
- easy to clean siphon
- removable siphon
- material installation set: Stainless Steel 304 (1.4301)

600 - 1200



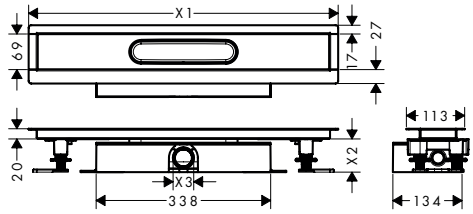

Technologies

High Drainage Capacity 60 L/min

Easy Clean Siphon

Installation

Water Damage Protection

Overview variants

Length (mm)	Code no.
600	56022180
700	56023180
800	56024180
900	56025180
1000	56026180
1200	56027180

Consisting of:		Included in	Code no.
	uBox universal Base set for finish sets for standard installation	56022180 56023180 56024180 56025180 56026180 56027180	01001180
	RainDrain Installation set 600 for shower drains finish sets	56022180	56010180
	RainDrain Installation set 700 for shower drains finish sets	56023180	56011180
	RainDrain Installation set 800 for shower drains finish sets	56024180	56012180
	RainDrain Installation set 900 for shower drains finish sets	56025180	56013180
	RainDrain Installation set 1000 for shower drains finish sets	56026180	56014180
	RainDrain Installation set 1200 for shower drains finish sets	56027180	56015180

Measurements within scale drawings are in mm.
Technical specifications and units of measure are subject to change.

uBox universal Complete sets for flat installation

Features of all variants

- consists of: installation set, base set, pre-assembled sealing membrane, siphon, height adjustment boards
- where to use: new construction, renovation
- water seal: 30 mm
- drainage capacity with siphon: up to 33 l/min
- drainage capacity with Dryphon: up to 55 l/min
- connection diameter: DN40
- direction of outlet: horizontal
- connection: 3-sided
- incl. height adjustment feet and tiling aid for installation
- easy fixation to the floor with mounting bracket
- height adjustable with the foam boards
- with integrated slope
- mounting type: wall-mounted, free in the floor
- easy to clean siphon
- removable siphon
- material installation set: Stainless Steel 304 (1.4301)

600 - 1200

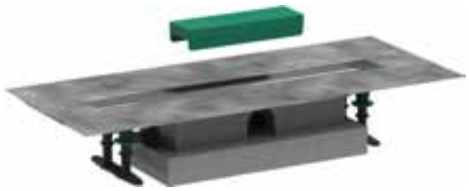

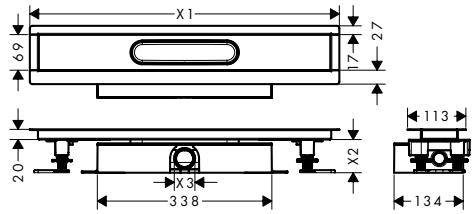

Technologies

Easy Clean Siphon

Installation

Water Damage Protection

Overview variants

	Length (mm)	Code no.
	600	56016180
	700	56017180
	800	56018180
	900	56019180
	1000	56020180
	1200	56021180

Consisting of:		Included in	Code no.
	uBox universal Base set for finish sets for flat installation	56016180 56017180 56018180 56019180 56020180 56021180	01000180
	RainDrain Installation set 600 for shower drains finish sets	56016180	56010180
	RainDrain Installation set 700 for shower drains finish sets	56017180	56011180
	RainDrain Installation set 800 for shower drains finish sets	56018180	56012180
	RainDrain Installation set 900 for shower drains finish sets	56019180	56013180
	RainDrain Installation set 1000 for shower drains finish sets	56020180	56014180
	RainDrain Installation set 1200 for shower drains finish sets	56021180	56015180

Measurements within scale drawings are in mm.
Technical specifications and units of measure are subject to change.



Wastes and overflows

Flexaplus Finish set waste and overflow set

Features

· consists of: turning handle, security plug
· suitable for standard and special bath tubs
· TÜV certified



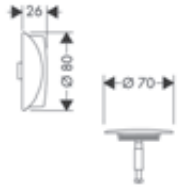

Finish	Code no.
Chrome	58185000
Brushed Bronze	58185140
Brushed Black Chrome	58185340
Matt Black	58185670
Matt White	58185700
Polished Gold Optic	58185990

Required parts:	Code no.
Flexaplus Basic set waste and overflow set for special bath tubs	58141180

Flexaplus S Finish set waste and overflow set

Features

· consists of: turning handle, security plug
· suitable for standard and special bath tubs



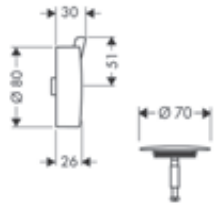

Finish	Code no.
Chrome	58186000

Required parts:	Code no.
Flexaplus Basic set waste and overflow set for special bath tubs	58141180

Waste set push-open for bath tubs



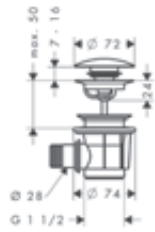

Finish	Code no.
Chrome	50107000

Required parts:	Finish	Code no.
Exafill Finish set bath filler	Chrome	58112000

Optional parts:	Code no.
Bath tub trap	56373000

Measurements within scale drawings are in mm.
Technical specifications and units of measure are subject to change.

Flexaplus Basic set waste and overflow set for special bath tubs

Features

- suitable for special bath tubs
- PE screw connection G 1½ x 40/ 50 mm
- flexible overflow hose
- bowden cable length 780 mm
- odour trap - backwater height is 50 mm



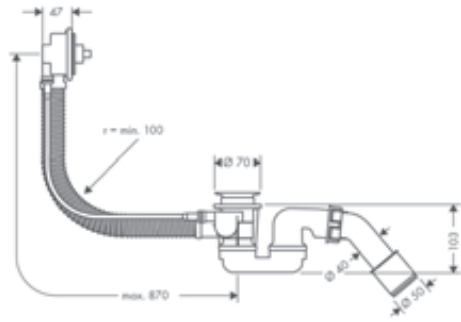

	Code no.
	58141180

Required parts:	Finish	Code no.
Flexaplus Finish set waste and overflow set	Chrome	58185000
	Brushed Bronze	58185140
	Brushed Black Chrome	58185340
	Matt Black	58185670
	Matt White	58185700
	Polished Gold Optic	58185990
Flexaplus S Finish set waste and overflow set	Chrome	58186000

Flexaplus Complete set waste and overflow set for standard bath tubs

Features

- consists of: basic set, finish set
- TÜV certified
- suitable for standard bath tubs
- PE screw connection G 1½ x 40/ 50 mm
- flexible overflow hose
- bowden cable length 520 mm
- odour trap - backwater height is 50 mm



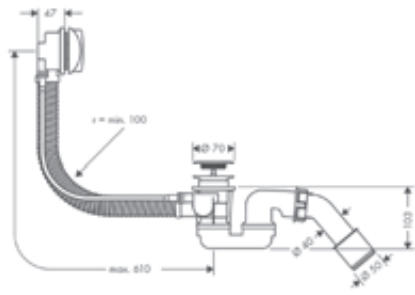

Finish	Code no.
Chrome	58143000

Consisting of:	Included in	Code no.
Flexaplus Finish set waste and overflow set	58143000	58185000

Measurements within scale drawings are in mm.
Technical specifications and units of measure are subject to change.

Flexaplus S Complete set waste and overflow set for standard bath tubs

Features

- consists of: basic set, finish set
- TÜV certified
- suitable for standard bath tubs
- PE screw connection G 1½ x 40/ 50 mm
- flexible overflow hose
- bowden cable length 520 mm
- odour trap - backwater height is 50 mm



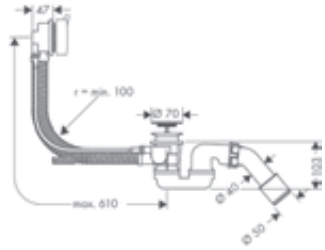

Finish	Code no.
Chrome	58150000

Consisting of:	Included in	Code no.
 Flexaplus S Finish set waste and overflow set	58150XXX	58186XXX

Bath tub trap

Features

- PE screw connection G 1½ x 40/ 50 mm
- odour trap - backwater height is 50 mm



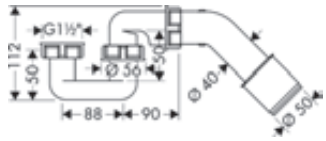

	Code no.
	56373000

Measurements within scale drawings are in mm.
Technical specifications and units of measure are subject to change.

Exafill Finish set bath filler, waste and overflow set

Features

- consists of: cover, security plug
- TÜV certified
- suitable for standard and special bath tubs
- triple aerator
- jet former can be adjusted by 20°
- maximum flow rate at 3 bar: 23 l/min



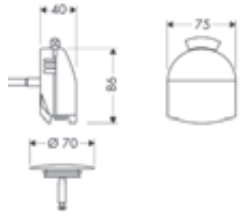

Finish	Code no.
Chrome	58127000

Required parts:	Code no.
Exafill Basic set bath filler, waste and overflow set for special bath tubs	58126180
Exafill Basic set bath filler, waste and overflow set for standard bath tubs	58125180

Optional parts:	Code no.
Flexible connection tube 80 cm	58192000

Exafill Finish set bath filler, waste and overflow set plus

Features

- consists of: cover, security plug
- TÜV certified
- suitable for standard and special bath tubs, bath tubs with recessed overflow opening
- triple aerator
- jet former can be adjusted by 20°
- maximum flow rate at 3 bar: 23 l/min



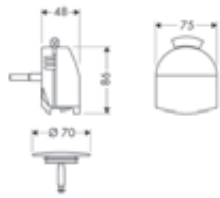

Finish	Code no.
Chrome	58128000

Required parts:	Code no.
Exafill Basic set bath filler, waste and overflow set for standard bath tubs	58125180
Exafill Basic set bath filler, waste and overflow set for special bath tubs	58126180

Optional parts:	Code no.
Flexible connection tube 80 cm	58192000

Measurements within scale drawings are in mm.
Technical specifications and units of measure are subject to change.

Exafill S Finish set bath filler, waste and overflow set

Features

- consists of: cover, security plug
- TÜV certified
- suitable for standard and special bath tubs
- wide flood jet
- jet former can be adjusted by 30°
- maximum flow rate at 3 bar: 19 l/min



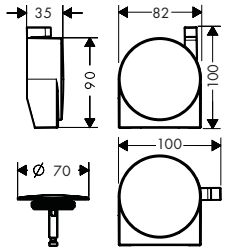

Spray types

RainFlow

Finish	Code no.
Chrome	58117000
Brushed Black Chrome	58117340
Matt Black	58117670
Matt White	58117700
Brushed Nickel	58117820
Polished Gold Optic	58117990

Required parts:	Code no.
Exafill S Basic set bath filler, waste and overflow set for standard bath tubs	58115180
Exafill S Basic set bath filler, waste and overflow set for special bath tubs	58116180

Optional parts:	Code no.
Flexible connection tube 80 cm	58192000

Exafill Finish set bath filler

Features

- maximum flow rate at 3 bar: 26 l/min
- overflow height adjustable by 25 mm



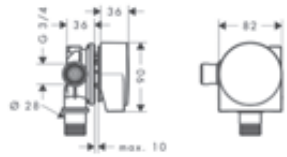

Finish	Code no.
Chrome	58112000

Required parts:	Finish	Code no.
Waste set push-open for bath tubs	Chrome	50107000

Optional parts:	Code no.
Bath tub trap	56373000

Measurements within scale drawings are in mm.
Technical specifications and units of measure are subject to change.

Exafill Basic set bath filler, waste and overflow set for standard bath tubs

Features

- consists of: basic set, bath tub trap
- suitable for standard bath tubs
- bowden cable length 520 mm
- odour trap - backwater height is 50 mm
- supply hose water connection left and right DN20



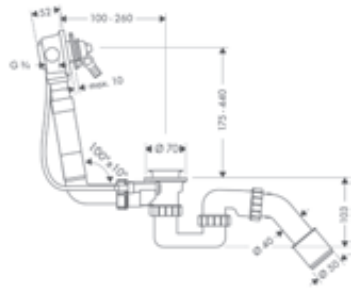

	Code no.
	58125180

Required parts:	Finish	Code no.
Exafill Finish set bath filler, waste and overflow set plus	Chrome	58128000
Exafill Finish set bath filler, waste and overflow set	Chrome	58127000

Optional parts:	Code no.
Flexible connection tube 80 cm	58192000

Exafill Basic set bath filler, waste and overflow set for special bath tubs

Features

- consists of: basic set, bath tub trap
- suitable for special bath tubs, with bellows for bath tubs with slanted bath rim
- bowden cable length 780 mm
- odour trap - backwater height is 50 mm
- supply hose water connection left and right DN20



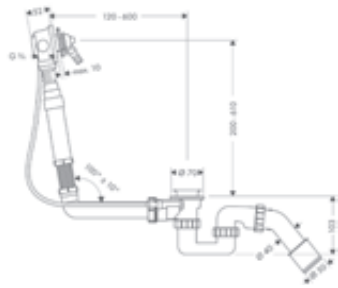

	Code no.
	58126180

Required parts:	Finish	Code no.
Exafill Finish set bath filler, waste and overflow set plus	Chrome	58128000
Exafill Finish set bath filler, waste and overflow set	Chrome	58127000

Optional parts:	Code no.
Flexible connection tube 80 cm	58192000

Measurements within scale drawings are in mm.
Technical specifications and units of measure are subject to change.

Exafill Complete set bath filler, waste and overflow set for standard bath tubs

Features

- consists of: bath tub trap, basic set, finish set
- TÜV certified
- suitable for standard bath tubs
- bowden cable length 520 mm
- odour trap - backwater height is 50 mm
- supply hose water connection left and right DN20



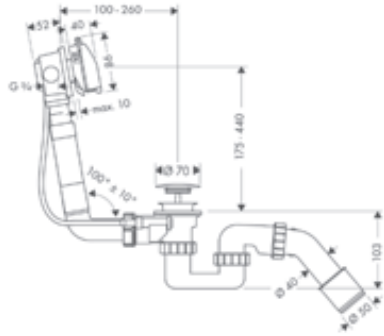

Finish	Code no.
Chrome	58123000

Consisting of:		Included in	Code no.
	Bath tub trap	58123XXX	56373000
	Exafill Basic set bath filler, waste and overflow set for standard bath tubs	58123XXX	58125180
	Exafill Finish set bath filler, waste and overflow set	58123XXX	58127XXX

Optional parts:		Code no.
	Flexible connection tube 80 cm	58192000

Exafill S Basic set bath filler, waste and overflow set for standard bath tubs

Features

- consists of: basic set, bath tub trap
- suitable for standard bath tubs, with bellows for bath tubs with slanted bath rim
- bowden cable length 520 mm
- odour trap - backwater height is 50 mm
- supply hose water connection left DN20



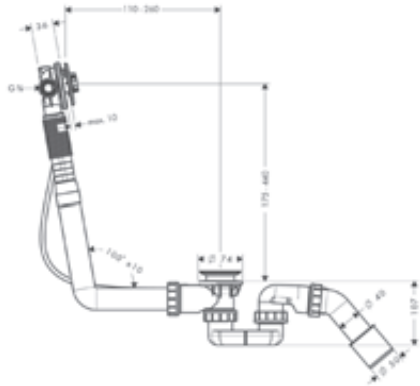

Code no.
58115180

Required parts:		Finish	Code no.
	Exafill S Finish set bath filler, waste and overflow set	Chrome	58117000
		Brushed Black Chrome	58117340
		Matt Black	58117670
		Matt White	58117700
		Brushed Nickel	58117820
		Polished Gold Optic	58117990

Optional parts:		Code no.
	Flexible connection tube 80 cm	58192000

Measurements within scale drawings are in mm.
Technical specifications and units of measure are subject to change.

Exafill S Basic set bath filler, waste and overflow set for special bath tubs

Features

- consists of: basic set, bath tub trap
- suitable for special bath tubs, with bellows for bath tubs with slanted bath rim
- bowden cable length 780 mm
- odour trap - backwater height is 50 mm
- supply hose water connection left DN20



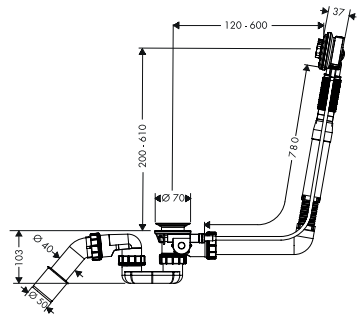

	Code no.
	58116180

Required parts:	Finish	Code no.
Exafill S Finish set bath filler, waste and overflow set	Chrome	58117000
	Brushed Black Chrome	58117340
	Matt Black	58117670
	Matt White	58117700
	Brushed Nickel	58117820
	Polished Gold Optic	58117990

Optional parts:	Code no.
Flexible connection tube 80 cm	58192000

Exafill S Complete set bath filler, waste and overflow set for standard bath tubs

Features

- consists of: bath tub trap, basic set, finish set
- TÜV certified
- suitable for standard bath tubs, with bellows for bath tubs with slanted bath rim
- bowden cable length 520 mm
- odour trap - backwater height is 50 mm
- supply hose water connection left DN20



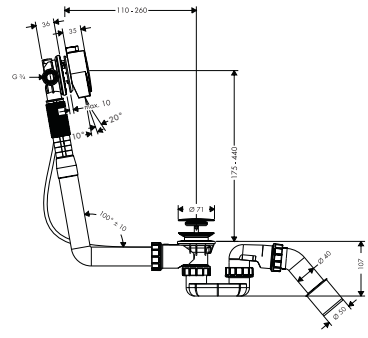

Finish	Code no.
Chrome	58113000

Consisting of:	Included in	Code no.
Bath tub trap	58113000	56373000
Exafill S Basic set bath filler, waste and overflow set for standard bath tubs	58113000	58115180
Exafill S Finish set bath filler, waste and overflow set	58113000	58117XXX

Optional parts:	Code no.
Flexible connection tube 80 cm	58192000

Measurements within scale drawings are in mm.
Technical specifications and units of measure are subject to change.

Flexible connection tube 80 cm

Features

- length 800 mm
- version: 90° angle





Code no.
58192000

Measurements within scale drawings are in mm.
Technical specifications and units of measure are subject to change.

Waste set pop-up for basin and bidet mixers

Features

- operation via pull-rod
- for basins with overflow hole
- drain plug material brass
- connection dimension G 1¼
- with overflow



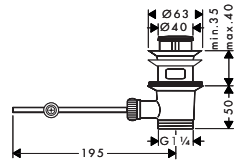

Finish	Code no.
Chrome	94139000
Brushed Bronze	94139140
Brushed Black Chrome	94139340
Matt Black	94139670
Matt White	94139700
Polished Gold Optic	94139990

Waste set push-open for basin and bidet mixers

Features

- operation with pressure plug
- for basins with overflow hole
- drain plug material brass
- connection dimension G 1¼
- with overflow



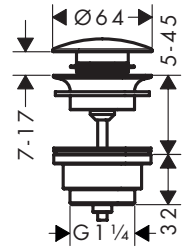

Finish	Code no.
Chrome	50100000
Brushed Bronze	50100140
Brushed Black Chrome	50100340
Matt Black	50100670
Matt White	50100700
Polished Gold Optic	50100990

Waste set push-open for basin and bidet

Features

- operation with pressure plug
- for basins with overflow hole
- drain plug material stainless steel
- connection dimension G 1¼
- with overflow



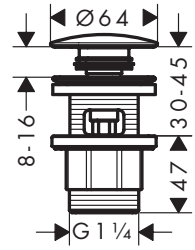

Finish	Code no.
Chrome	50105000

Waste set non-closing for wash basins

Features

- non-closing valve
- for washbasins without overflow
- drain plug material stainless steel
- connection dimension G 1¼
- with overflow



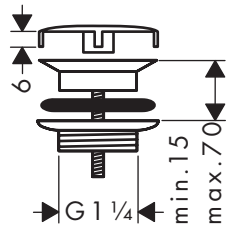

Finish	Code no.
Chrome	50001000
Brushed Bronze	50001140
Brushed Black Chrome	50001340
Matt Black	50001670
Matt White	50001700
Polished Gold Optic	50001990

Design trap Flowstar

Features

- adjustment distance 65 - 165 mm
- distance to wall 330 mm
- odour trap - backwater height is 70 mm
- connection dimension entry: G 1¼



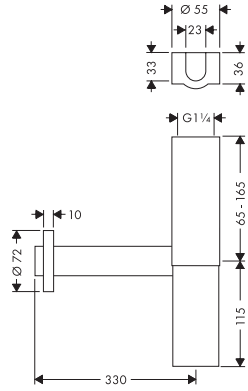

Finish	Code no.
Chrome	52100000

Design trap Flowstar set

Features

- consists of: design trap, 2 angle valves, 2 covers
- adjustment distance 65 - 165 mm
- distance to wall 330 mm
- odour trap - backwater height is 75 mm
- connection dimension entry: G 1¼



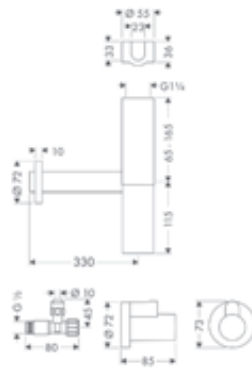

Finish	Code no.
Chrome	52120000

Consisting of:		Included in	Code no.
	Cover	52120000	13950XXX
	Angle valve with cover outlet G 3/8	52120000	13954XXX
	Design trap Flowstar	52120000	52100XXX

Measurements within scale drawings are in mm.
Technical specifications and units of measure are subject to change.

Design trap Flowstar S

Features

- adjustment distance 60 - 165 mm
- distance to wall 330 mm
- odour trap - backwater height is 75 mm
- connection dimension entry: G 1¼
- connection dimension outlet: DN32



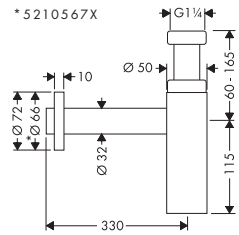

Finish	Code no.
Chrome	52105000
Brushed Bronze	52105140
Brushed Black Chrome	52105340
Matt Black	52105670
Matt White	52105700
Polished Gold Optic	52105990

Cover

Features

- for the facing of an angle valve



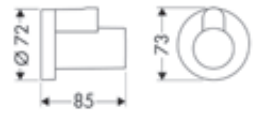

Finish	Code no.
Chrome	13950000
Brushed Bronze	13950140
Brushed Black Chrome	13950340
Matt Black	13950670
Matt White	13950700
Polished Gold Optic	13950990

Angle valve with cover outlet G 3/8

Features

- consists of: angle valve, cover
- connection dimension entry: G ½
- connection dimension outlet: G ⅜
- packaging unit: 1 piece





Finish	Code no.
Chrome	13954000
Brushed Nickel	13954820

Measurements within scale drawings are in mm.
Technical specifications and units of measure are subject to change.

Angle valve with microfilter outlet G 3/8

Features

- for protection of mixers against dirt inlet, e.g. for electronic basin mixers
- filter element can be removed and cleaned
- connection dimension entry: G ½
- connection dimension outlet: G ⅜
- packaging unit: 1 piece



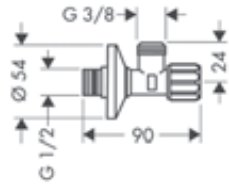

Finish	Code no.
Chrome	13904000

Optional parts:	Finish	Code no.
 Cover	Chrome	13950000

Angle valve E outlet G 3/8

Features

- connection dimension entry: G ½
- connection dimension outlet: G ⅜
- packaging unit: 1 piece
- noise class: I
- flow rate class: A



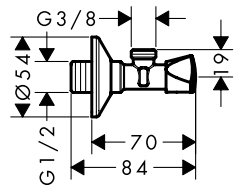

Finish	Code no.
Chrome	13902000

Optional parts:	Finish	Code no.
 Cover	Chrome	13950000

Measurements within scale drawings are in mm.
Technical specifications and units of measure are subject to change.

Angle valve E outlet G 1/2

Features

- connection dimension entry: G ½
- connection dimension outlet: G ½
- packaging unit: 1 piece
- noise class: I
- flow rate class: A



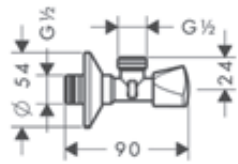

Finish	Code no.
Chrome	13903000

Angle valve S outlet G 3/8

Features

- connection dimension entry: G ½
- connection dimension outlet: G ⅜
- packaging unit: 1 piece
- noise class: I
- flow rate class: A



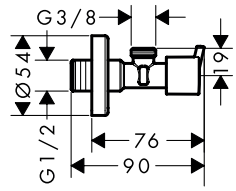

Finish	Code no.
Chrome	13901000

Cup-shaped trap standard model

Features

- main material: brass
- adjustment distance 35 - 95 mm
- distance to wall 225 mm
- odour trap - backwater height is 50 mm
- connection dimension entry: G 1¼
- connection dimension outlet: DN32



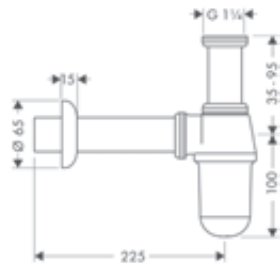

Finish	Code no.
Chrome	52053000

Measurements within scale drawings are in mm.
Technical specifications and units of measure are subject to change.

Cup-shaped trap easy to install

Features

- adjustment distance 35 - 140 mm
- distance to wall 285 mm
- odour trap - backwater height is 50 mm
- connection dimension entry: G 1¼



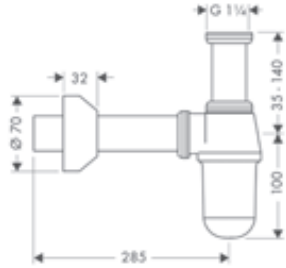

Finish	Code no.
Chrome	52010000

Pipe trap standard model

Features

- adjustment distance 35 - 85 mm
- distance to wall 250 mm
- odour trap - backwater height is 50 mm
- connection dimension entry: G 1¼



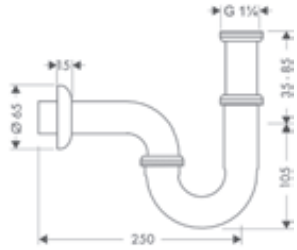

Finish	Code no.
Chrome	53002000

Pipe trap easy to install

Features

- adjustment distance 30 - 120 mm
- distance to wall 300 mm
- odour trap - backwater height is 50 mm
- connection dimension entry: G 1¼



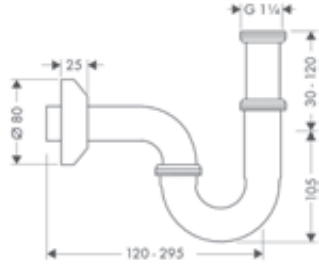

Finish	Code no.
Chrome	53010000

Measurements within scale drawings are in mm.
Technical specifications and units of measure are subject to change.

Pipe trap standard model for bidet

Features

- adjustment distance 30 - 55 mm
- distance to wall 275 mm
- odour trap - backwater height is 50 mm
- connection dimension entry: G 1¼



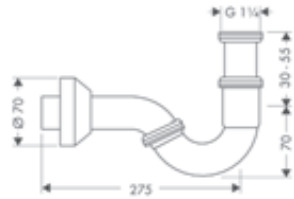

Finish	Code no.
Chrome	55237000

Curved pipe 30 cm

Features

- length 300 mm
- with edge
- material: brass
- connection dimension G 1¼





Finish	Code no.
Chrome	53555000

Straight pipe 50 cm

Features

- length 500 mm
- material: brass
- connection dimension G 1¼





Finish	Code no.
Chrome	53493000
Matt Black	53493670
Matt White	53493700

Measurements within scale drawings are in mm.
Technical specifications and units of measure are subject to change.

Straight pipe 30 cm with rim

Features

- length 300 mm
- with edge
- material: brass
- connection dimension G 1¼





Finish	Code no.
Chrome	53428000
Matt Black	53428670
Matt White	53428700

Angle pipe 90°

Features

- material: brass
- connection dimension G 1¼



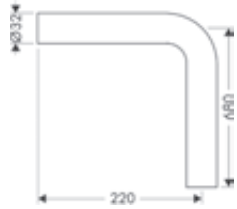

Finish	Code no.
Chrome	53646000

Extension pipe 12.5 cm

Features

- material: brass
- connection dimension G 1¼



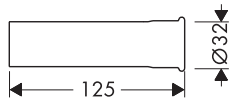

Finish	Code no.
Chrome	53990000

Measurements within scale drawings are in mm.
Technical specifications and units of measure are subject to change.

Wall flange

Features

- material: brass
- connection dimension DN15
- packaging unit: 100 pieces
- Price refers to 1 piece





Finish	Code no.
Chrome	06010000



Thermostats
exposed installation

Thermostatic mixer for exposed installation

ShowerTablet Select






Finish				
Select	■	■	■	■
CoolContact	■	■	■	■
Safety lock at 40 degrees	■	■	■	■
Temperature limitation adjustable	■	■	■	■
Bath spout	–	■	–	■
from page	283	283	284	285

Ecostat





Finish			
Select	–	–	–
CoolContact	–	–	–
Safety lock at 40 degrees	■	■	■
Temperature limitation adjustable	■	■	■
Bath spout	–	■	–
from page	288	289	289

■ available depending on the model
– not available

	Ecostat Select		Ecostat E	
				
Finish	◐◐	◐◐	◐	◐
Select	–	–	–	–
CoolContact	■	■	■	■
Safety lock at 40 degrees	■	■	■	■
Temperature limitation adjustable	■	■	■	■
Bath spout	–	■	–	■
from page	286	287	287	288

	Ecostat				
					
Finish	◐	◐	◐	◐	◐
Select	–	–	–	–	–
CoolContact	–	–	–	–	–
Safety lock at 40 degrees	■	■	■	■	–
Temperature limitation adjustable	■	■	■	■	■
Bath spout	–	■	–	■	–
from page	290	290	291	291	292

Highlights

Sustainability



Simple and precise control for saving water. The EcoStop function regulates the water flow to max. 10 l/min.



Actively regulates water consumption – the amount of water can be adjusted via the control dial.

Technologies



Mixes air into the water. For a soft, less splashing water jet and full, light drops.



Thermostatic mixer with innovative cooling technology to prevent scalding and unpleasant touching.



Limescale deposits and dirt can be simply rubbed off using a finger, creating less of a need to clean.



The bath filler can be swivelled under the thermostatic mixer when not in use. Nice and tidy.



Safety lock at over 40 °C - temperature limit, which prevents excessively hot water from escaping.



A playful way to control the water flow, shower or spray type at the simple touch of a button.



Thermostat with integrated temperature control for constant water temperature.

Finishes



Brushed Black Chrome



Brushed Bronze

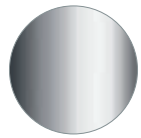

Chrome



Matt Black

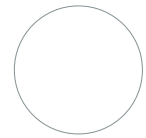

Matt White



Polished Gold Optic



White/Chrome

ShowerTablet Select Shower thermostats for exposed installation

Features of all variants

- CoolContact thermostat: Prevents the housing from heating up, making showering even safer
- min. operating pressure: 1 bar
- max. operating pressure: 10 bar
- Safety stop at 40 °C
- temperature limitation adjustable
- with isolated water conduction
- non-return valve
- with silencer
- shelf made of safety glass
- surface shelf: mirror glass
- material handles: metal
- connection dimension: DN15
- connection type: adjustable connection, G ½
- dirt filter included

300



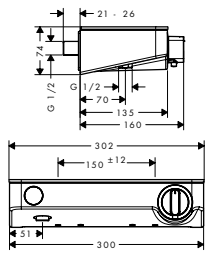

700



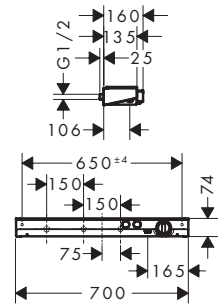

Technologies

Safety Stop · Thermostat · Select · Cool Contact

Certificates/declarations

EPD

Overview variants

Product dimensions (mm)	Centre distance (mm)	Number of functions	Finish	Code no.
300	150	1 function	Chrome	13171000
			White/Chrome	13171400
700	150	2 functions	Chrome	13184000
			White/Chrome	13184400

13171400
13184400 Surface shelf: white glass.

Optional parts:	For	Finish	Code no.
S-connections adapter G ¾ for renovation	13171XXX	Chrome	02026000

ShowerTablet Select Bath thermostats for exposed installation

Features of all variants

- projection 192 mm
- 2 functions
- simultaneous utilization of 2 functions
- Select push-button on/off control for 2 outlets
- CoolContact thermostat: Prevents the housing from heating up, making showering even safer
- maximum flow rate at 3 bar: 20 l/min
- flow rate for bath spout at 3 bar: 20 l/min
- min. operating pressure: 1 bar
- max. operating pressure: 10 bar
- Safety stop at 40 °C
- temperature limitation adjustable
- with isolated water conduction
- non-return valve
- protected against backflow, according to DIN EN 1717
- with silencer
- material handles: metal
- shelf made of safety glass
- surface shelf: mirror glass
- connection dimension: DN15
- connection type: adjustable connection, G ½
- dirt filter included
- thermostat is delivered with buttons hand shower and bath tub

300



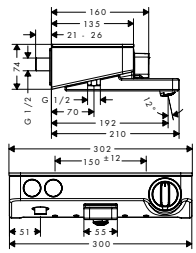

700

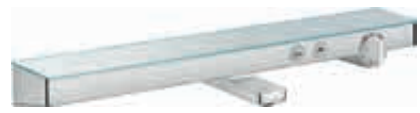

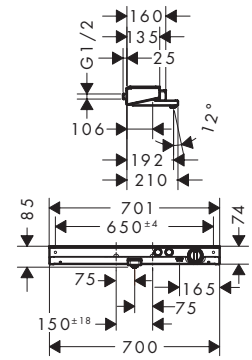

Technologies

Safety Stop · Thermostat · Select · Cool Contact · AirPower · Quick Clean

Certificates/declarations

EPD

For more information about this product, please see the next page.

Measurements within scale drawings are in mm.
Technical specifications and units of measure are subject to change.

ShowerTablet Select Bath thermostats for exposed installation

Overview variants

Centre distance (mm)	Finish	Code no.
150	Chrome	13151000
	White/Chrome	13151400
150	Chrome	13183000

13151400 Surface shelf: white glass.

Optional parts:	For	Finish	Code no.
 S-connections adapter G ¾ for renovation	13151XXX	Chrome	02026000

ShowerTablet Select Shower thermostat 400 for exposed installation

Features

- 1 function
- temperature and volume control
- Select push-button on/off control for 1 outlet
- hand shower holder integrated in the shelf
- CoolContact thermostat: Prevents the housing from heating up, making showering even safer
- maximum flow rate at 3 bar: 16,3 l/min
- min. operating pressure: 1 bar
- max. operating pressure: 10 bar
- Safety stop at 40 °C
- temperature limitation adjustable
- with isolated water conduction
- non-return valve
- with silencer
- suitable for continous flow water heaters
- shelf made of plastic
- surface shelf: graphite
- material handles: plastic
- centre distance: 150 ± 12 mm
- connection dimension: DN15
- connection type: s-shaped connections, G ½
- dirt filter included
- thermostat is delivered with button hand shower



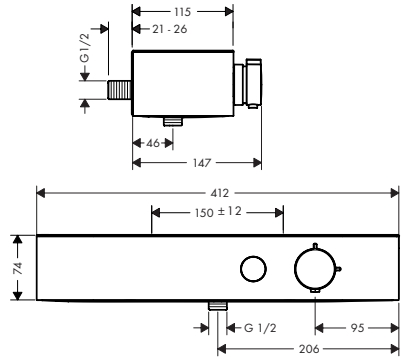

Sustainability



Technologies



Finish	Code no.
Chrome	24360000
Brushed Bronze	24360140
Matt Black	24360670
Matt White	24360700

Optional parts:	Finish	Code no.
 S-connections adapter G ¾ for renovation	Chrome	02026000

Measurements within scale drawings are in mm.
Technical specifications and units of measure are subject to change.

ShowerTablet Select Bath thermostat 400 for exposed installation

Features

- rotatable bath spout
- 2 functions
- simultaneous utilization of 2 functions
- temperature and volume control
- Select push-button on/off control for 2 outlets
- CoolContact thermostat: Prevents the housing from heating up, making showering even safer
- maximum flow rate at 3 bar: 18,7 l/min
- flow rate for bath spout at 3 bar: 18,7 l/min
- flow rate of hand shower at 3 bar: 15,9 l/min
- min. operating pressure: 1 bar
- max. operating pressure: 10 bar
- Safety stop at 40 °C
- temperature limitation adjustable
- with isolated water conduction
- non-return valve
- protected against backflow, according to DIN EN 1717
- with silencer
- suitable for continous flow water heaters
- material handles: plastic
- shelf made of plastic
- surface shelf: graphite
- connection dimension: DN15
- connection type: s-shaped connections, G ½
- centre distance: 150 ± 12 mm
- dirt filter included
- thermostat is delivered with buttons hand shower and bath tub



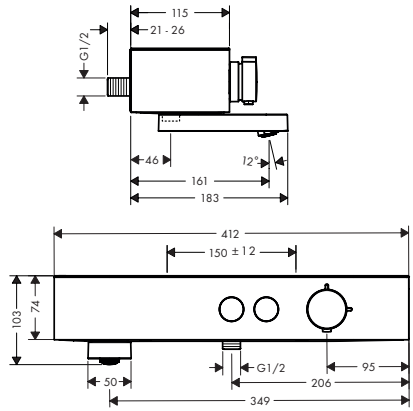

Sustainability

Water Flow Control

Technologies

Safety Stop 40°C | Rotatable Bath Spout | Thermostat °C | Select SELECT | Cool Contact

Finish	Code no.
Chrome	24340000
Brushed Bronze	24340140
Matt Black	24340670
Matt White	24340700

Optional parts:	Finish	Code no.
 S-connections adapter G ¾ for renovation	Chrome	02026000

Measurements within scale drawings are in mm.
Technical specifications and units of measure are subject to change.

Ecostat Select Shower thermostats for exposed installation

Features of all variants

- 1 function
- volume control for 1 function
- CoolContact thermostat: Prevents the housing from heating up, making showering even safer
- EcoStop button limits the water consumption to 10 l/min
- thermostat cartridge, ceramic valve 180°
- maximum flow rate at 3 bar: 12 l/min
- min. operating pressure: 1 bar
- max. operating pressure: 10 bar
- Safety stop at 40 °C
- temperature limitation adjustable
- with isolated water conduction
- non-return valve
- with silencer
- shelf made of safety glass
- surface shelf: mirror glass
- material handles: metal
- centre distance: 150 ± 12 mm
- connection dimension: DN15
- connection type: s-shaped connections, G ½
- dirt filter included



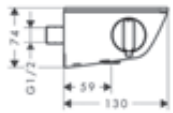

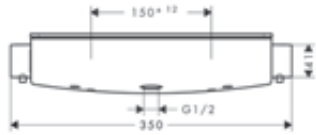

Sustainability

EcoStop · Water Flow Control

Technologies

Safety Stop · Thermostat · Cool Contact

Certificates/declarations

EPD

Overview variants

	Renovation	Finish	Code no.
	–	Chrome	13161000
		White/Chrome	13161400
	■	White/Chrome	13111400

13161400
13111400 Surface shelf: white glass.

Optional parts:		For	Finish	Code no.
	S-connections adapter G ¾ for renovation	13161XXX	Chrome	02026000

Measurements within scale drawings are in mm.
Technical specifications and units of measure are subject to change.

Ecostat Select Bath thermostat for exposed installation

Features

- projection 193 mm
- 2 functions
- CoolContact thermostat: Prevents the housing from heating up, making showering even safer
- thermostat cartridge, ceramic valve 180°
- maximum flow rate at 3 bar: 20 l/min
- flow rate for bath spout at 3 bar: 20 l/min
- flow rate of hand shower at 3 bar: 12 l/min
- flow rate hand shower connection at 3 bar: 12 l/min
- min. operating pressure: 1 bar
- max. operating pressure: 10 bar
- Safety stop at 40 °C
- temperature limitation adjustable
- with isolated water conduction
- non-return valve
- protected against backflow, according to DIN EN 1717
- with silencer
- material handles: metal
- shelf made of safety glass
- surface shelf: mirror glass
- in case of installation on existing G ¾ connections, adaptor no.02026000 must be used
- connection dimension: DN15
- connection type: s-shaped connections, G ½
- centre distance: 150 ± 12 mm
- dirt filter included



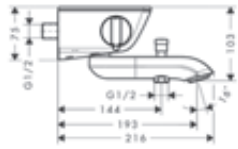

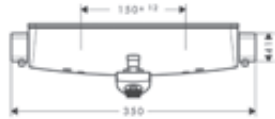

Sustainability

Technologies

Certificates/declarations

Finish	Code no.
Chrome	13141000
White/Chrome	13141400

13141400 Surface shelf: white glass.

Optional parts:	Finish	Code no.
 S-connections adapter G ¾ for renovation	Chrome	02026000

Ecostat E Shower thermostat for exposed installation

Features

- 1 function
- CoolContact thermostat: Prevents the housing from heating up, making showering even safer
- EcoStop button limits the water consumption to 10 l/min
- thermostat cartridge
- maximum flow rate at 3 bar: 28,6 l/min
- min. operating pressure: 1 bar
- max. operating pressure: 10 bar
- Safety stop at 40 °C
- temperature limitation adjustable
- with isolated water conduction
- non-return valve
- with silencer
- suitable for continous flow water heaters
- material handles: metal
- centre distance: 150 ± 12 mm
- connection dimension: DN15
- connection type: s-shaped connections, G ½
- dirt filter included



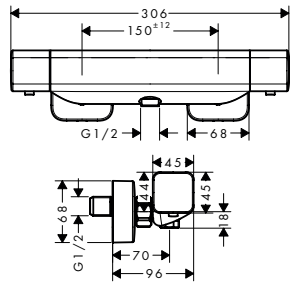

Sustainability

Technologies

Certificates/declarations

Finish	Code no.
Chrome	15773000

Ecostat E Bath thermostat for exposed installation

Features

- projection 183 mm
- 2 functions
- CoolContact thermostat: Prevents the housing from heating up, making showering even safer
- thermostat cartridge
- maximum flow rate at 3 bar: 18,6 l/min
- flow rate for bath spout at 3 bar: 18,6 l/min
- flow rate of hand shower at 3 bar: 15,4 l/min
- min. operating pressure: 1 bar
- max. operating pressure: 10 bar
- Safety stop at 40 °C
- temperature limitation adjustable
- non-return valve
- protected against backflow, according to DIN EN 1717
- with silencer
- material handles: metal
- connection dimension: DN15
- connection type: s-shaped connections, G ½
- centre distance: 150 ± 12 mm
- dirt filter included



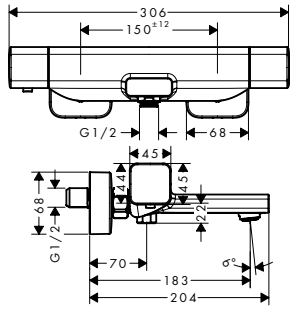

Sustainability

Water Flow Control

Technologies

Safety Stop 40°C | Thermostat °C | Cool Contact | Quick Clean

Certificates/declarations

EPD

Finish	Code no.
Chrome	15774000

Ecostat Shower thermostat Comfort for exposed installation

Features

- 1 function
- EcoStop button limits the water consumption to 10 l/min
- thermostat cartridge, ceramic valve 180°
- maximum flow rate at 3 bar: 17 l/min
- min. operating pressure: 1 bar
- max. operating pressure: 10 bar
- Safety stop at 40 °C
- temperature limitation adjustable
- non-return valve
- with silencer
- material handles: metal
- centre distance: 150 ± 12 mm
- connection dimension: DN15
- connection type: s-shaped connections, G ½
- dirt filter included



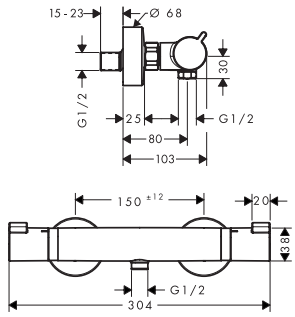

Sustainability

EcoStop | Water Flow Control

Technologies

Safety Stop 40°C | Thermostat °C

Certificates/declarations

EPD

Finish	Code no.
Chrome	13116000
Brushed Bronze	13116140
Brushed Black Chrome	13116340
Matt Black	13116670
Matt White	13116700
Polished Gold Optic	13116990

Measurements within scale drawings are in mm.
Technical specifications and units of measure are subject to change.

Ecostat Bath thermostat Comfort for exposed installation

Features

- projection 177 mm
- 2 functions
- thermostat cartridge, shut-off/ diverter valve
- spray type mixer: normal spray
- maximum flow rate at 3 bar: 20 l/min
- flow rate for bath spout at 3 bar: 20 l/min
- flow rate of hand shower at 3 bar: 16 l/min
- flow rate hand shower connection at 3 bar: 16 l/min
- min. operating pressure: 1 bar
- max. operating pressure: 10 bar
- Safety stop at 40 °C
- temperature limitation adjustable
- non-return valve
- with silencer
- material handles: metal
- connection dimension: DN15
- connection type: s-shaped connections, G ½
- centre distance: 150 ± 12 mm
- dirt filter included



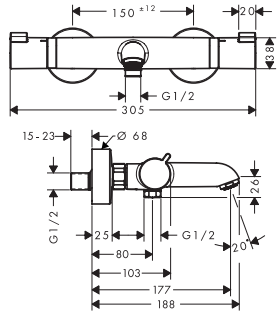

Sustainability

Water Flow Control

Technologies

Safety Stop 40°C | Thermostat | AirPower | Quick Clean

Certificates/declarations

EPD

Finish	Code no.
Chrome	13114000
Brushed Bronze	13114140
Brushed Black Chrome	13114340
Matt Black	13114670
Matt White	13114700
Polished Gold Optic	13114990

Ecostat Shower thermostat Comfort Care for exposed installation with extra long handles

Features

- larger print for greater clarity
- with extra long barrier-free handles
- 1 function
- thermostat cartridge, ceramic valve 180°
- min. operating pressure: 1 bar
- max. operating pressure: 10 bar
- Safety stop at 40 °C
- temperature limitation adjustable
- non-return valve
- with silencer
- material handles: metal
- centre distance: 150 ± 12 mm
- connection dimension: DN15
- connection type: s-shaped connections, G ½
- dirt filter included



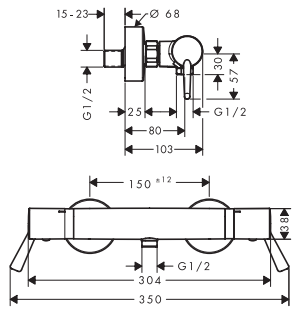

Sustainability

EcoStop | Water Flow Control

Technologies

Safety Stop 40°C | Thermostat

Certificates/declarations

EPD

Finish	Code no.
Chrome	13117000

Measurements within scale drawings are in mm.
Technical specifications and units of measure are subject to change.

Ecostat Shower thermostat universal for exposed installation

Features

- 1 function
- EcoStop button limits the water consumption to 10 l/min
- thermostat cartridge, ceramic valve 180°
- maximum flow rate at 3 bar: 17 l/min
- min. operating pressure: 1 bar
- max. operating pressure: 10 bar
- Safety stop at 40 °C
- temperature limitation adjustable
- non-return valve
- with silencer
- centre distance: 150 ± 12 mm
- connection dimension: DN15
- connection type: s-shaped connections, G ½
- dirt filter included



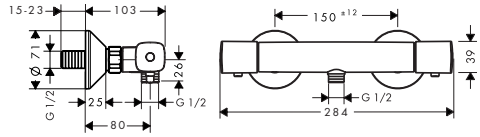

Sustainability

EcoStop · Water Flow Control

Technologies

Safety Stop 40°C · Thermostat

Certificates/declarations

EPD

Finish	Code no.
Chrome	13122000

Ecostat Bath thermostat universal for exposed installation

Features

- projection 194 mm
- 2 functions
- thermostat cartridge, shut-off/ diverter valve
- maximum flow rate at 3 bar: 20 l/min
- flow rate for bath spout at 3 bar: 20 l/min
- flow rate of hand shower at 3 bar: 16 l/min
- flow rate hand shower connection at 3 bar: 16 l/min
- min. operating pressure: 1 bar
- max. operating pressure: 10 bar
- Safety stop at 40 °C
- temperature limitation adjustable
- non-return valve
- with silencer
- connection dimension: DN15
- connection type: s-shaped connections, G ½
- centre distance: 150 ± 12 mm
- dirt filter included



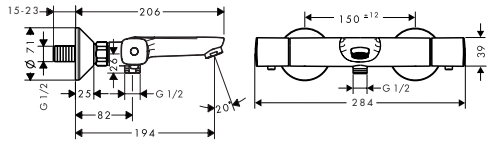

Sustainability

Water Flow Control

Technologies

Safety Stop 40°C · Thermostat · AirPower · Quick Clean

Certificates/declarations

EPD

Finish	Code no.
Chrome	13123000

Measurements within scale drawings are in mm.
Technical specifications and units of measure are subject to change.

Ecostat Shower thermostat 1001 CL for exposed installation

Features

- 1 function
- EcoStop button limits the water consumption to 10 l/min
- thermostat cartridge, ceramic valve 180°
- maximum flow rate at 3 bar: 16 l/min
- min. operating pressure: 1 bar
- max. operating pressure: 10 bar
- Safety stop at 40 °C
- temperature limitation adjustable
- the thermostat offers the possibility for thermal disinfection
- non-return valve
- with silencer
- material handles: metal
- centre distance: 150 ± 12 mm
- connection dimension: DN15
- connection type: s-shaped connections, G ½
- dirt filter included



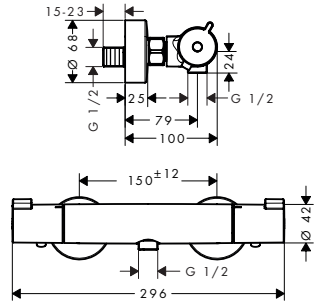

Sustainability

EcoStop, Water Flow Control

Technologies

Safety Stop 40°C, Thermostat

Certificates/declarations

EPD

Finish	Code no.
Chrome	13211000

Ecostat Bath thermostat 1001 CL for exposed installation

Features

- projection 182 mm
- 2 functions
- thermostat cartridge, shut-off valve
- spray type mixer: normal spray
- maximum flow rate at 3 bar: 20 l/min
- flow rate for bath spout at 3 bar: 20 l/min
- flow rate of hand shower at 3 bar: 16 l/min
- flow rate hand shower connection at 3 bar: 16 l/min
- min. operating pressure: 1 bar
- max. operating pressure: 10 bar
- Safety stop at 40 °C
- temperature limitation adjustable
- non-return valve
- with silencer
- material handles: metal
- connection dimension: DN15
- connection type: s-shaped connections, G ½
- centre distance: 150 ± 12 mm
- dirt filter included



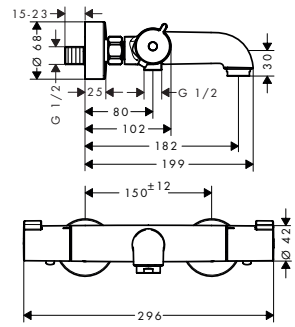

Sustainability

Water Flow Control

Technologies

Safety Stop 40°C, Thermostat, AirPower

Certificates/declarations

EPD

Finish	Code no.
Chrome	13201000

Measurements within scale drawings are in mm.
Technical specifications and units of measure are subject to change.

Ecostat Under-basin thermostat for exposed installation

Features

- min. operating pressure: 1 bar
- max. operating pressure: 5 bar
- temperature limitation adjustable
- the thermostat offers the possibility for thermal disinfection
- non-return valve
- connection dimension: G ⅜



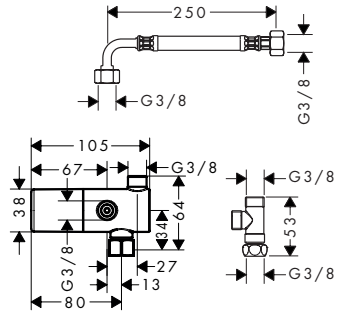

Technologies

Thermostat

Finish	Code no.
Chrome	15346000

Measurements within scale drawings are in mm.
Technical specifications and units of measure are subject to change.



Thermostats concealed installation

Thermostatic mixers for concealed installation

	RainSelect		ShowerSelect Comfort S		
					
Finish					
Select	■	■	■	–	■
Safety lock at 40 degrees	■	■	■	■	■
Temperature limitation adjustable	■	■	■	■	■
Number of functions	2 - 5	2 - 5	1/2	–	1
from page	299	301	303	305	306

	ShowerSelect Comfort Q			
				
Finish				
Select	■	–	■	■
Safety lock at 40 degrees	■	■	■	–
Temperature limitation adjustable	■	■	■	–
Number of functions	1/2	–	1	3
from page	313	314	315	316

■ available depending on the model
– not available

	ShowerSelect Comfort S	ShowerSelect Comfort E			
					
Finish					
Select	■	■	–	■	■
Safety lock at 40 degrees	–	■	■	■	–
Temperature limitation adjustable	–	■	■	■	–
Number of functions	3	1/2	–	1	3
from page	307	308	310	311	312

	ShowerSelect Glass			
				
Finish				
Select	■	–	■	■
Safety lock at 40 degrees	■	■	■	–
Temperature limitation adjustable	■	■	■	–
Number of functions	1/2	–	1	3
from page	317	317	318	318

Thermostatic mixers for concealed installation

	ShowerSelect				
					
Finish					
Select	■	–	■	■	■
Safety lock at 40 degrees	■	■	■	–	–
Temperature limitation adjustable	■	■	■	–	■
Number of functions	1/2	–	1	3	1/2
from page	320	322	323	323	324

	Ecostat S		Ecostat Square	Ecostat E	
					
Finish					
Select	–	–	–	–	–
Safety lock at 40 degrees	■	■	■	■	■
Temperature limitation adjustable	■	■	■	■	■
Number of functions	1/2	–	1/2	1/2	–
from page	330	331	333	334	335

■ available depending on the model
– not available

	ShowerSelect S				
					
Finish					
Select	■	–	■	■	■
Safety lock at 40 degrees	■	■	■	–	–
Temperature limitation adjustable	■	■	■	–	■
Number of functions	1/2	–	1	3	1/2
from page	325	325	326	327	327

	DuoTurn S	DuoTurn E	DuoTurn Q
			
Finish			
Select	–	–	–
Safety lock at 40 degrees	–	–	–
Temperature limitation adjustable	–	–	–
Number of functions	1/2	1/2	1/2
from page	336	337	338

Highlights

Sustainability



Actively regulates water consumption – the amount of water can be adjusted via the control dial.



Actively regulate water consumption - the amount of water can be adjusted using the control dial.

Technologies



Safety lock at over 40 °C - temperature limit, which prevents excessively hot water from escaping.



A playful way to control the water flow, shower or spray type at the simple touch of a button.



Thermostat with integrated temperature control for constant water temperature.

Finishes



Black/Chrome



Brushed Black Chrome

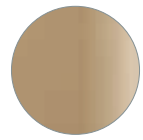

Brushed Bronze



Chrome



Matt Black

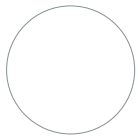

Matt White

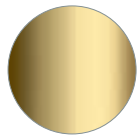

Polished Gold Optic

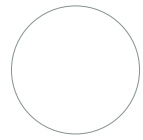

White



White/Chrome

RainSelect Thermostats for concealed installation

Features of all variants

- simultaneous use of several outlets
- depending on volume flow and installation situation approx. 50% flow rate reduction and integrated shut off function
- thermostat cartridge, Start/stop valve to operate the functions
- maximum flow rate at 3 bar: 38 l/min
- flow rate per outlet: 26 l/min
- flow rate by simultaneous use of all outlets: 38 l/min
- min. operating pressure: 1 bar
- max. operating pressure: 10 bar
- Safety stop at 40 °C
- temperature limitation adjustable
- non-return valve
- connection type: basic set

2 functions



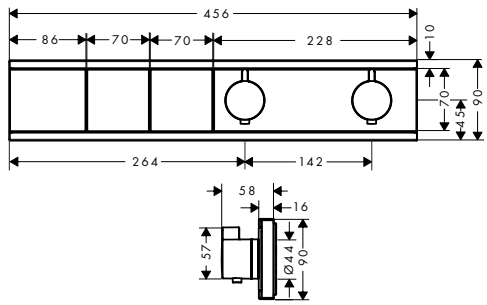

3 functions



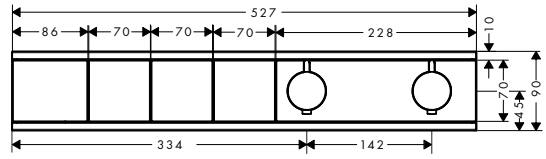

Sustainability

Water Flow Control

Technologies

Safety Stop 40°C | Thermostat °C | Select SELECT

Certificates/declarations

EPD

Overview variants

Number of functions	Max. flow rate at 3 bar (l/min)	Finish	Code no.
2 functions	38	Chrome	15380000
		Brushed Bronze	15380140
		Brushed Black Chrome	15380340
		Matt Black	15380670
		Matt White	15380700
		Polished Gold Optic	15380990
3 functions	38	Chrome	15381000
		Brushed Bronze	15381140
		Brushed Black Chrome	15381340
		Matt Black	15381670
		Matt White	15381700
		Polished Gold Optic	15381990

Required parts:	For	Code no.
 RainSelect Basic set for 2 functions	15380XXX	15310180
 RainSelect Basic set for 3 functions	15381XXX	15311180

Measurements within scale drawings are in mm.
Technical specifications and units of measure are subject to change.

RainSelect Thermostats for concealed installation

Features of all variants

- simultaneous use of several outlets
- depending on volume flow and installation situation approx. 50% flow rate reduction and integrated shut off function
- thermostat cartridge, Start/stop valve to operate the functions
- maximum flow rate at 3 bar: 38 l/min
- flow rate by simultaneous use of all outlets: 38 l/min
- min. operating pressure: 1 bar
- max. operating pressure: 10 bar
- Safety stop at 40 °C
- temperature limitation adjustable
- non-return valve
- connection type: basic set

4 functions



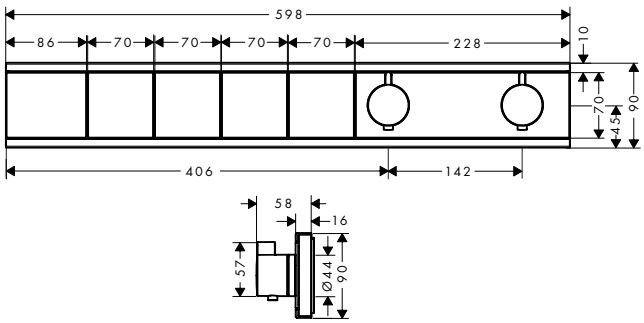

5 functions



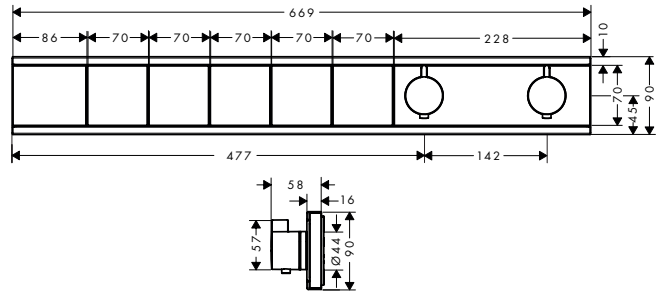

Sustainability

Water Flow Control

Technologies

Safety Stop 40°C | Thermostat °C | Select SELECT

Certificates/declarations

EPD

Overview variants

Number of functions	Max. flow rate at 3 bar (l/min)	Finish	Code no.
4 functions	38	Chrome	15382000
		Brushed Bronze	15382140
		Brushed Black Chrome	15382340
		Matt Black	15382670
		Matt White	15382700
		Polished Gold Optic	15382990
5 functions	38	Chrome	15384000
		Brushed Bronze	15384140
		Brushed Black Chrome	15384340
		Matt Black	15384670
		Matt White	15384700
		Polished Gold Optic	15384990

Required parts:	For	Code no.
 RainSelect Basic set for 4 functions	15382XXX	15312180
 RainSelect Basic set for 5 functions	15384XXX	15313180

Measurements within scale drawings are in mm.
Technical specifications and units of measure are subject to change.

RainSelect Thermostats for concealed installation

Features of all variants

- consists of: Thermostat, shower holder
- simultaneous use of several outlets
- depending on volume flow and installation situation approx. 50% flow rate reduction and integrated shut off function
- thermostat cartridge, Start/stop valve to operate the functions
- maximum flow rate at 3 bar: 38 l/min
- flow rate per outlet: 26 l/min
- flow rate by simultaneous use of all outlets: 38 l/min
- min. operating pressure: 1 bar
- max. operating pressure: 10 bar
- Safety stop at 40 °C
- temperature limitation adjustable
- non-return valve
- for shower hoses with conical or cylindrical nut on both sides
- connection type: basic set

2 functions



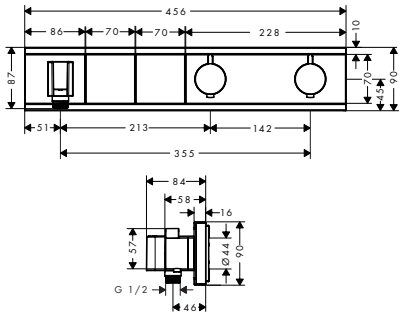

3 functions



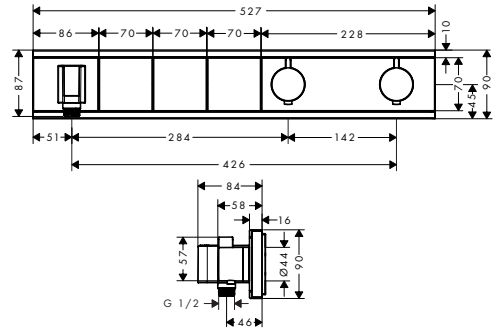

Sustainability

Water Flow Control

Technologies

Safety Stop 40°C | Thermostat °C | Select SELECT

Certificates/declarations

EPD

Overview variants

Number of functions	Max. flow rate at 3 bar (l/min)	Finish	Code no.
2 functions	38	Chrome	15355000
		White/Chrome	15355400
		Black/Chrome	15355600
3 functions	38	Chrome	15356000
		White/Chrome	15356400
		Black/Chrome	15356600

Required parts:	For	Code no.
 RainSelect Basic set for 2 functions	15355XXX	15310180
 RainSelect Basic set for 3 functions	15356XXX	15311180

Measurements within scale drawings are in mm.
Technical specifications and units of measure are subject to change.

RainSelect Thermostats for concealed installation

Features of all variants

- consists of: Thermostat, shower holder
- simultaneous use of several outlets
- depending on volume flow and installation situation approx. 50% flow rate reduction and integrated shut off function
- thermostat cartridge, Start/stop valve to operate the functions
- maximum flow rate at 3 bar: 38 l/min
- flow rate per outlet: 26 l/min
- flow rate by simultaneous use of all outlets: 38 l/min
- min. operating pressure: 1 bar
- max. operating pressure: 10 bar
- Safety stop at 40 °C
- temperature limitation adjustable
- non-return valve
- for shower hoses with conical or cylindrical nut on both sides
- connection type: basic set

4 functions



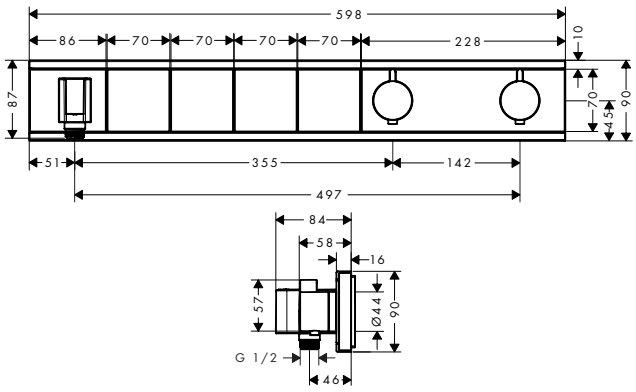

5 functions



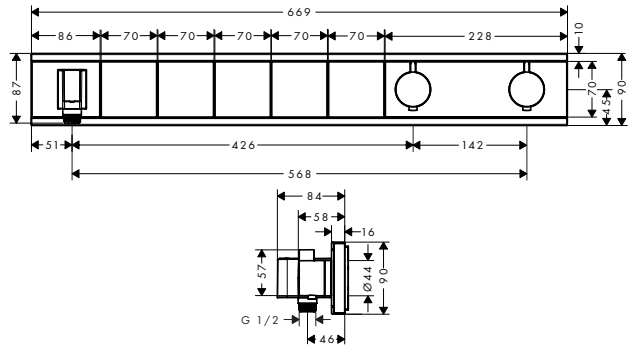

Sustainability

Water Flow Control

Technologies

Safety Stop 40°C | Thermostat °C | Select SELECT

Certificates/declarations

EPD

Overview variants

Number of functions	Max. flow rate at 3 bar (l/min)	Finish	Code no.
4 functions	38	Chrome	15357000
		White/Chrome	15357400
		Black/Chrome	15357600
5 functions	38	Chrome	15358000
		White/Chrome	15358400
		Black/Chrome	15358600

Required parts:	For	Code no.
 RainSelect Basic set for 4 functions	15357XXX	15312180
 RainSelect Basic set for 5 functions	15358XXX	15313180

Measurements within scale drawings are in mm.
Technical specifications and units of measure are subject to change.

ShowerSelect Comfort S Thermostat for concealed installation for 1 function

Features

- 1 function
- comfortable turning on / off of one outlet with large Select-paddle
- water flow control with stop function
- thermostat cartridge, Start/stop valve to operate the functions
- maximum flow rate at 3 bar: 20,3 l/min
- min. operating pressure: 1 bar
- max. operating pressure: 10 bar
- flat escutcheon for more space in the shower
- escutcheon can be aligned by +/- 3 °
- easy installation due to pre-assembled function block
- handles always at the same height regardless of the installation depth of the basic set
- Safety stop at 40 °C
- temperature limitation adjustable
- the thermostat offers the possibility for thermal disinfection
- material button: metal
- material handles: metal
- connection type: basic set iBox universal 2 (# 01500180)
- thermostat is delivered with button On/Off



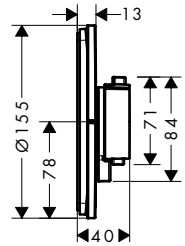

Sustainability

Water Flow Control

Technologies

Safety Stop 40°C | Thermostat °C | Select SELECT

Finish	Code no.
Chrome	15553000
Brushed Bronze	15553140
Brushed Black Chrome	15553340
Matt Black	15553670
Matt White	15553700

Required parts:	Code no.
iBox universal 2 Basic set	01500180

Measurements within scale drawings are in mm.
Technical specifications and units of measure are subject to change.

ShowerSelect Comfort S Thermostat for concealed installation for 2 functions

Features

- 2 functions
- simultaneous use of several outlets
- comfortable turning on / off of outlets with large Select-paddle
- water flow control with stop function
- thermostat cartridge, Start/stop valve to operate the functions
- maximum flow rate at 3 bar: 22,1 l/min
- flow rate upper outlet: 20 l/min
- flow rate lower outlet: 20 l/min
- min. operating pressure: 1 bar
- max. operating pressure: 10 bar
- flat escutcheon for more space in the shower
- escutcheon can be aligned by +/- 3°
- easy installation due to pre-assembled function block
- handles always at the same height regardless of the installation depth of the basic set
- Safety stop at 40 °C
- temperature limitation adjustable
- the thermostat offers the possibility for thermal disinfection
- material button: metal
- material handles: metal
- connection type: basic set iBox universal 2 (# 01500180)
- thermostat is delivered with buttons Rain small, Rain large, hand sower, Waterfall, bath tub



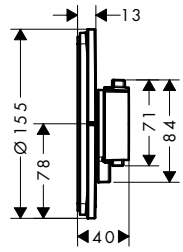

Sustainability

Water Flow Control

Technologies

Safety Stop 40°C | Thermostat °C | Select SELECT

Finish	Code no.
Chrome	15554000
Brushed Bronze	15554140
Brushed Black Chrome	15554340
Matt Black	15554670
Matt White	15554700

Required parts:	Code no.
iBox universal 2 Basic set	01500180

Measurements within scale drawings are in mm.
Technical specifications and units of measure are subject to change.

ShowerSelect Comfort S Thermostat for concealed installation

Features

- temperature and volume control
- water flow control with stop function
- thermostat cartridge
- maximum flow rate at 3 bar: 28,8 l/min
- min. operating pressure: 1 bar
- max. operating pressure: 10 bar
- flat escutcheon for more space in the shower
- escutcheon can be aligned by +/- 3°
- easy installation due to pre-assembled function block
- handles always at the same height regardless of the installation depth of the basic set
- Safety stop at 40 °C
- temperature limitation adjustable
- the thermostat offers the possibility for thermal disinfection
- material handles: metal
- connection type: basic set iBox universal 2 (# 01500180)



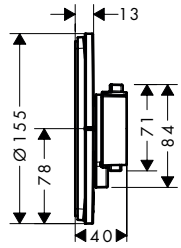

Sustainability

Water Flow Control

Technologies

Safety Stop 40°C

Thermostat

Finish	Code no.
Chrome	15559000
Brushed Bronze	15559140
Brushed Black Chrome	15559340
Matt Black	15559670
Matt White	15559700

Required parts:	Code no.
iBox universal 2 Basic set	01500180

Optional parts:	Finish	Code no.
ShowerSelect Comfort S Valve for concealed installation for 3 functions	Chrome	15558000
	Brushed Bronze	15558140
	Brushed Black Chrome	15558340
	Matt Black	15558670
	Matt White	15558700

Measurements within scale drawings are in mm.
Technical specifications and units of measure are subject to change.

ShowerSelect Comfort S Thermostat for concealed installation for 1 function and additional outlet

Features

- 1 function and 1 additional outlet
- comfortable turning on / off of one outlet with large Select-paddle
- water flow control with stop function
- thermostat cartridge, Start/stop valve to operate the functions
- maximum flow rate at 3 bar: 32,8 l/min
- flow rate upper outlet: 23 l/min
- flow rate lower outlet: 23 l/min
- min. operating pressure: 1 bar
- max. operating pressure: 10 bar
- flat escutcheon for more space in the shower
- escutcheon can be aligned by +/- 3°
- easy installation due to pre-assembled function block
- handles always at the same height regardless of the installation depth of the basic set
- Safety stop at 40 °C
- temperature limitation adjustable
- the thermostat offers the possibility for thermal disinfection
- material button: metal
- material handles: metal
- connection type: basic set iBox universal 2 (# 01500180)
- thermostat is delivered with buttons Rain small, Rain large, hand sower, Waterfall, bath tub



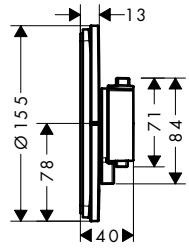

Sustainability

Water Flow Control

Technologies

Safety Stop 40°C | Thermostat | Select

Finish	Code no.
Chrome	15562000
Brushed Bronze	15562140
Brushed Black Chrome	15562340
Matt Black	15562670
Matt White	15562700

Required parts:	Code no.
iBox universal 2 Basic set	01500180

Optional parts:	Finish	Code no.
ShowerSelect Comfort S Valve for concealed installation for 3 functions	Chrome	15558000
	Brushed Bronze	15558140
	Brushed Black Chrome	15558340
	Matt Black	15558670
	Matt White	15558700

Measurements within scale drawings are in mm.
Technical specifications and units of measure are subject to change.

ShowerSelect Comfort S Valve for concealed installation for 3 functions

Features

- 3 functions
- simultaneous use of several outlets
- comfortable turning on / off of outlets with large Select-paddle
- Start/stop valve to operate the functions
- maximum flow rate at 3 bar: 32 l/min
- flow rate upper outlet: 26 l/min
- Flow rate left and right: 26 l/min
- min. operating pressure: 1 bar
- max. operating pressure: 10 bar
- flat escutcheon for more space in the shower
- escutcheon can be aligned by +/- 3°
- easy installation due to pre-assembled function block
- material button: metal
- connection type: basic set iBox universal 2 (# 01500180)
- valve is delivered with buttons Rain small, Rain large, hand sower, Waterfall, bath tub



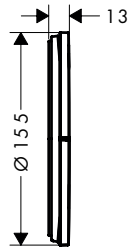

Technologies

Select

Finish	Code no.
Chrome	15558000
Brushed Bronze	15558140
Brushed Black Chrome	15558340
Matt Black	15558670
Matt White	15558700

Required parts:		Code no.
	iBox universal 2 Basic set	01500180

Optional parts:		Finish	Code no.
	ShowerSelect Comfort S Thermostat for concealed installation	Chrome	15559000
		Brushed Bronze	15559140
		Brushed Black Chrome	15559340
		Matt Black	15559670
		Matt White	15559700
	ShowerSelect Comfort S Thermostat for concealed installation for 1 function and additional outlet	Chrome	15562000
		Brushed Bronze	15562140
		Brushed Black Chrome	15562340
		Matt Black	15562670
		Matt White	15562700

Measurements within scale drawings are in mm.
Technical specifications and units of measure are subject to change.

ShowerSelect Comfort E Thermostat for concealed installation for 1 function

Features

- 1 function
- comfortable turning on / off of one outlet with large Select-paddle
- water flow control with stop function
- thermostat cartridge, Start/stop valve to operate the functions
- maximum flow rate at 3 bar: 20,3 l/min
- min. operating pressure: 1 bar
- max. operating pressure: 10 bar
- flat escutcheon for more space in the shower
- escutcheon can be aligned by +/- 3°
- easy installation due to pre-assembled function block
- handles always at the same height regardless of the installation depth of the basic set
- Safety stop at 40 °C
- temperature limitation adjustable
- the thermostat offers the possibility for thermal disinfection
- material button: metal
- material handles: metal
- connection type: basic set iBox universal 2 (# 01500180)
- thermostat is delivered with button On/Off



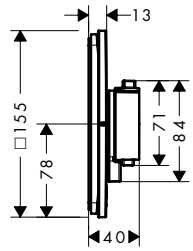

Sustainability

Water Flow Control

Technologies

Safety Stop 40°C | Thermostat | Select

Finish	Code no.
Chrome	15571000
Brushed Bronze	15571140
Brushed Black Chrome	15571340
Matt Black	15571670
Matt White	15571700

Required parts:	Code no.
iBox universal 2 Basic set	01500180

Measurements within scale drawings are in mm.
Technical specifications and units of measure are subject to change.

ShowerSelect Comfort E Thermostat for concealed installation for 2 functions

Features

- 2 functions
- simultaneous use of several outlets
- comfortable turning on / off of outlets with large Select-paddle
- water flow control with stop function
- thermostat cartridge, Start/stop valve to operate the functions
- maximum flow rate at 3 bar: 22,1 l/min
- flow rate upper outlet: 20 l/min
- flow rate lower outlet: 20 l/min
- min. operating pressure: 1 bar
- max. operating pressure: 10 bar
- flat escutcheon for more space in the shower
- escutcheon can be aligned by +/- 3 °
- easy installation due to pre-assembled function block
- handles always at the same height regardless of the installation depth of the basic set
- Safety stop at 40 °C
- temperature limitation adjustable
- the thermostat offers the possibility for thermal disinfection
- material button: metal
- material handles: metal
- connection type: basic set iBox universal 2 (# 01500180)
- thermostat is delivered with buttons Rain small, Rain large, hand sower, Waterfall, bath tub



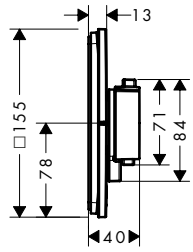

Sustainability

Water Flow Control

Technologies

Safety Stop 40°C | Thermostat °C | Select SELECT

Finish	Code no.
Chrome	15572000
Brushed Bronze	15572140
Brushed Black Chrome	15572340
Matt Black	15572670
Matt White	15572700

Required parts:	Code no.
iBox universal 2 Basic set	01500180

Measurements within scale drawings are in mm.
Technical specifications and units of measure are subject to change.

ShowerSelect Comfort E Thermostat for concealed installation

Features

- temperature and volume control
- water flow control with stop function
- thermostat cartridge
- maximum flow rate at 3 bar: 28,8 l/min
- flow rate upper outlet: 23 l/min
- flow rate lower outlet: 23 l/min
- min. operating pressure: 1 bar
- max. operating pressure: 10 bar
- flat escutcheon for more space in the shower
- escutcheon can be aligned by +/- 3°
- easy installation due to pre-assembled function block
- handles always at the same height regardless of the installation depth of the basic set
- Safety stop at 40 °C
- temperature limitation adjustable
- the thermostat offers the possibility for thermal disinfection
- material handles: metal
- connection type: basic set iBox universal 2 (# 01500180)



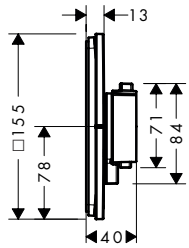

Sustainability

Water Flow Control

Technologies

Safety Stop 40°C

Thermostat °C

Finish	Code no.
Chrome	15574000
Brushed Bronze	15574140
Brushed Black Chrome	15574340
Matt Black	15574670
Matt White	15574700

Required parts:	Code no.
iBox universal 2 Basic set	01500180

Optional parts:	Finish	Code no.
ShowerSelect Comfort E Valve for concealed installation for 3 functions	Chrome	15573000
	Brushed Bronze	15573140
	Brushed Black Chrome	15573340
	Matt Black	15573670
	Matt White	15573700

Measurements within scale drawings are in mm.
Technical specifications and units of measure are subject to change.

ShowerSelect Comfort E Thermostat for concealed installation for 1 function and additional outlet

Features

- 1 function and 1 additional outlet
- comfortable turning on / off of one outlet with large Select-paddle
- water flow control with stop function
- thermostat cartridge, Start/stop valve to operate the functions
- maximum flow rate at 3 bar: 32,8 l/min
- flow rate upper outlet: 23 l/min
- flow rate lower outlet: 23 l/min
- min. operating pressure: 1 bar
- max. operating pressure: 10 bar
- flat escutcheon for more space in the shower
- escutcheon can be aligned by +/- 3 °
- easy installation due to pre-assembled function block
- handles always at the same height regardless of the installation depth of the basic set
- Safety stop at 40 °C
- temperature limitation adjustable
- the thermostat offers the possibility for thermal disinfection
- material button: metal
- material handles: metal
- connection type: basic set iBox universal 2 (# 01500180)
- thermostat is delivered with buttons Rain small, Rain large, hand sower, Waterfall, bath tub



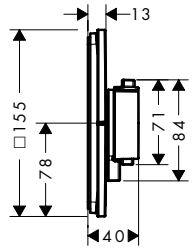

Sustainability

Water Flow Control

Technologies

Safety Stop 40°C | Thermostat °C | Select SELECT

Finish	Code no.
Chrome	15575000
Brushed Bronze	15575140
Brushed Black Chrome	15575340
Matt Black	15575670
Matt White	15575700

Required parts:	Code no.
iBox universal 2 Basic set	01500180

Optional parts:	Finish	Code no.
ShowerSelect Comfort E Valve for concealed installation for 3 functions	Chrome	15573000
	Brushed Bronze	15573140
	Brushed Black Chrome	15573340
	Matt Black	15573670
	Matt White	15573700

Measurements within scale drawings are in mm.
Technical specifications and units of measure are subject to change.

ShowerSelect Comfort E Valve for concealed installation for 3 functions

Features

- 3 functions
- simultaneous use of several outlets
- comfortable turning on / off of outlets with large Select-paddle
- Start/stop valve to operate the functions
- maximum flow rate at 3 bar: 32 l/min
- flow rate upper outlet: 26 l/min
- Flow rate left and right: 26 l/min
- min. operating pressure: 1 bar
- max. operating pressure: 10 bar
- flat escutcheon for more space in the shower
- escutcheon can be aligned by +/- 3°
- easy installation due to pre-assembled function block
- material button: metal
- connection type: basic set iBox universal 2 (# 01500180)
- valve is delivered with buttons Rain small, Rain large, hand sower, Waterfall, bath tub



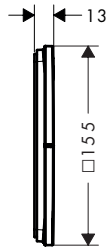

Technologies

Select

Finish	Code no.
Chrome	15573000
Brushed Bronze	15573140
Brushed Black Chrome	15573340
Matt Black	15573670
Matt White	15573700

Required parts:	Code no.
iBox universal 2 Basic set	01500180

Optional parts:	Finish	Code no.
ShowerSelect Comfort E Thermostat for concealed installation	Chrome	15574000
	Brushed Bronze	15574140
	Brushed Black Chrome	15574340
	Matt Black	15574670
	Matt White	15574700
ShowerSelect Comfort E Thermostat for concealed installation for 1 function and additional outlet	Brushed Bronze	15575140
	Brushed Black Chrome	15575340
	Matt Black	15575670
	Matt White	15575700

Measurements within scale drawings are in mm.
Technical specifications and units of measure are subject to change.

ShowerSelect Comfort Q Thermostat for concealed installation for 1 function

Features

- 1 function
- comfortable turning on / off of one outlet with large Select-paddle
- water flow control with stop function
- thermostat cartridge, Start/stop valve to operate the functions
- maximum flow rate at 3 bar: 20,3 l/min
- min. operating pressure: 1 bar
- max. operating pressure: 10 bar
- flat escutcheon for more space in the shower
- escutcheon can be aligned by +/- 3 °
- easy installation due to pre-assembled function block
- handles always at the same height regardless of the installation depth of the basic set
- Safety stop at 40 °C
- temperature limitation adjustable
- the thermostat offers the possibility for thermal disinfection
- material button: metal
- material handles: metal
- connection type: basic set iBox universal 2 (# 01500180)
- thermostat is delivered with button On/Off



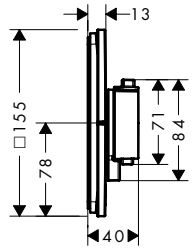

Sustainability

Water Flow Control

Technologies

Safety Stop 40°C | Thermostat °C | Select SELECT

Finish	Code no.
Chrome	15581000
Brushed Bronze	15581140
Brushed Black Chrome	15581340
Matt Black	15581670
Matt White	15581700

Required parts:	Code no.
iBox universal 2 Basic set	01500180

Measurements within scale drawings are in mm.
Technical specifications and units of measure are subject to change.

ShowerSelect Comfort Q Thermostat for concealed installation for 2 functions

Features

- 2 functions
- simultaneous use of several outlets
- comfortable turning on / off of outlets with large Select-paddle
- water flow control with stop function
- thermostat cartridge, Start/stop valve to operate the functions
- maximum flow rate at 3 bar: 22,1 l/min
- min. operating pressure: 1 bar
- max. operating pressure: 10 bar
- flat escutcheon for more space in the shower
- escutcheon can be aligned by +/- 3°
- easy installation due to pre-assembled function block
- handles always at the same height regardless of the installation depth of the basic set
- Safety stop at 40 °C
- temperature limitation adjustable
- the thermostat offers the possibility for thermal disinfection
- material button: metal
- material handles: metal
- connection type: basic set iBox universal 2 (# 01500180)
- thermostat is delivered with buttons Rain small, Rain large, hand sower, Waterfall, bath tub



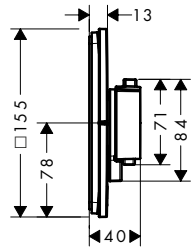

Sustainability

Water Flow Control

Technologies

Safety Stop 40°C | Thermostat °C | Select SELECT

Finish	Code no.
Chrome	15583000
Brushed Bronze	15583140
Brushed Black Chrome	15583340
Matt Black	15583670
Matt White	15583700

Required parts:

	Code no.
iBox universal 2 Basic set	01500180

ShowerSelect Comfort Q Thermostat for concealed installation

Features

- temperature and volume control
- water flow control with stop function
- thermostat cartridge
- maximum flow rate at 3 bar: 28,8 l/min
- min. operating pressure: 1 bar
- max. operating pressure: 10 bar
- flat escutcheon for more space in the shower
- escutcheon can be aligned by +/- 3°
- easy installation due to pre-assembled function block
- handles always at the same height regardless of the installation depth of the basic set
- Safety stop at 40 °C
- temperature limitation adjustable
- the thermostat offers the possibility for thermal disinfection
- material handles: metal
- connection type: basic set iBox universal 2 (# 01500180)



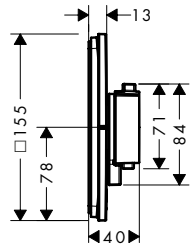

Sustainability

Water Flow Control

Technologies

Safety Stop 40°C | Thermostat °C

Finish	Code no.
Chrome	15588000
Brushed Bronze	15588140
Brushed Black Chrome	15588340
Matt Black	15588670
Matt White	15588700

Measurements within scale drawings are in mm.
Technical specifications and units of measure are subject to change.

ShowerSelect Comfort Q Thermostat for concealed installation

Required parts:	Code no.
iBox universal 2 Basic set	01500180

Optional parts:	Finish	Code no.
ShowerSelect Comfort Q Valve for concealed installation for 3 functions	Chrome	15587000
	Brushed Bronze	15587140
	Brushed Black Chrome	15587340
	Matt Black	15587670
	Matt White	15587700

ShowerSelect Comfort Q Thermostat for concealed installation for 1 function and additional outlet

Features

- 1 function and 1 additional outlet
- comfortable turning on / off of one outlet with large Select-paddle
- water flow control with stop function
- thermostat cartridge, Start/stop valve to operate the functions
- maximum flow rate at 3 bar: 32,8 l/min
- flow rate upper outlet: 23 l/min
- flow rate lower outlet: 23 l/min
- min. operating pressure: 1 bar
- max. operating pressure: 10 bar
- flat escutcheon for more space in the shower
- escutcheon can be aligned by +/- 3°
- easy installation due to pre-assembled function block
- handles always at the same height regardless of the installation depth of the basic set
- Safety stop at 40 °C
- temperature limitation adjustable
- the thermostat offers the possibility for thermal disinfection
- material button: metal
- material handles: metal
- connection type: basic set iBox universal 2 (# 01500180)
- thermostat is delivered with buttons Rain small, Rain large, hand sower, Waterfall, bath tub



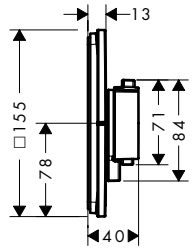

Sustainability

Water Flow Control

Technologies

Safety Stop 40°C · Thermostat · Select

Finish	Code no.
Chrome	15589000
Brushed Bronze	15589140
Brushed Black Chrome	15589340
Matt Black	15589670
Matt White	15589700

Required parts:	Code no.
iBox universal 2 Basic set	01500180

Optional parts:	Finish	Code no.
ShowerSelect Comfort Q Valve for concealed installation for 3 functions	Chrome	15587000
	Brushed Bronze	15587140
	Brushed Black Chrome	15587340
	Matt Black	15587670
	Matt White	15587700

Measurements within scale drawings are in mm.
Technical specifications and units of measure are subject to change.

ShowerSelect Comfort Q Valve for concealed installation for 3 functions

Features

- 3 functions
- simultaneous use of several outlets
- comfortable turning on / off of outlets with large Select-paddle
- Start/stop valve to operate the functions
- maximum flow rate at 3 bar: 32 l/min
- flow rate upper outlet: 26 l/min
- Flow rate left and right: 26 l/min
- min. operating pressure: 1 bar
- max. operating pressure: 10 bar
- flat escutcheon for more space in the shower
- escutcheon can be aligned by +/- 3°
- easy installation due to pre-assembled function block
- handles always at the same height regardless of the installation depth of the basic set
- material button: metal
- connection type: basic set iBox universal 2 (# 01500180)
- valve is delivered with buttons Rain small, Rain large, hand sower, Waterfall, bath tub



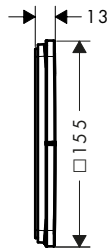

Technologies

Select

Finish	Code no.
Chrome	15587000
Brushed Bronze	15587140
Brushed Black Chrome	15587340
Matt Black	15587670
Matt White	15587700

Required parts:		Code no.
	iBox universal 2 Basic set	01500180

Optional parts:		Finish	Code no.
	ShowerSelect Comfort Q Thermostat for concealed installation	Chrome	15588000
		Brushed Bronze	15588140
		Brushed Black Chrome	15588340
		Matt Black	15588670
		Matt White	15588700
	ShowerSelect Comfort Q Thermostat for concealed installation for 1 function and additional outlet	Chrome	15589000
		Brushed Bronze	15589140
		Brushed Black Chrome	15589340
		Matt Black	15589670
		Matt White	15589700

Measurements within scale drawings are in mm.
Technical specifications and units of measure are subject to change.

ShowerSelect Glass Thermostats for concealed installation

Features of all variants

- thermostat cartridge, Start/stop valve to operate the functions
- min. operating pressure: 1 bar
- max. operating pressure: 10 bar
- Safety stop at 40 °C
- temperature limitation adjustable
- connection type: basic set

1 function



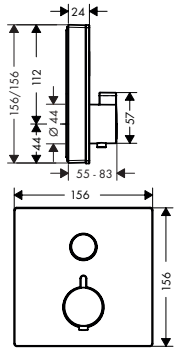

2 functions



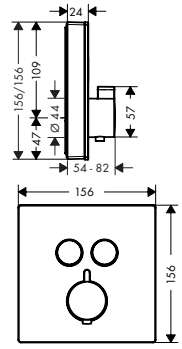

Technologies

Safety Stop | Thermostat | Select

Certificates/declarations

EPD

Overview variants

Number of functions	Max. flow rate at 3 bar (l/min)	Finish	Code no.
1 function	26.7	White/Chrome	15737400
2 functions	29.7	White/Chrome	15738400

Required parts (choose one):			Code no.
Option 1		iBox universal 2 Basic set	01500180
+		Adapter plate for iBox universal 2	13588000
Option 2		iBox universal Basic set	01800180

ShowerSelect Glass Thermostat HighFlow for concealed installation

Features

- thermostat cartridge
- maximum flow rate at 3 bar: 42 l/min
- flow rate upper outlet: 42 l/min
- flow rate lower outlet: 42 l/min
- min. operating pressure: 1 bar
- max. operating pressure: 10 bar
- Safety stop at 40 °C
- temperature limitation adjustable
- connection type: basic set
- dirt filter included



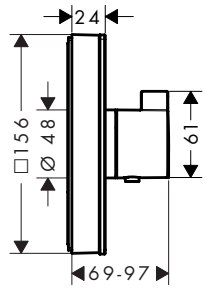

Technologies

Safety Stop | Thermostat

Certificates/declarations

EPD

Finish	Code no.
White/Chrome	15734400

Required parts (choose one):			Code no.
Option 1		iBox universal 2 Basic set	01500180
+		Adapter plate for iBox universal 2	13588000
Option 2		iBox universal Basic set	01800180

Optional parts:		Finish	Code no.
	ShowerSelect Glass Valve for concealed installation for 3 functions	White/Chrome	15736400

Measurements within scale drawings are in mm.
Technical specifications and units of measure are subject to change.

ShowerSelect Glass Thermostat HighFlow for concealed installation for 1 function and additional outlet

Features

- 1 function and 1 additional outlet
- Select push-button on/off control for 1 outlet
- thermostat cartridge, Start/stop valve to operate the functions
- maximum flow rate at 3 bar: 59 l/min
- flow rate upper outlet: 59 l/min
- min. operating pressure: 1 bar
- max. operating pressure: 10 bar
- Safety stop at 40 °C
- temperature limitation adjustable
- connection type: basic set
- dirt filter included
- thermostat is delivered with button hand shower



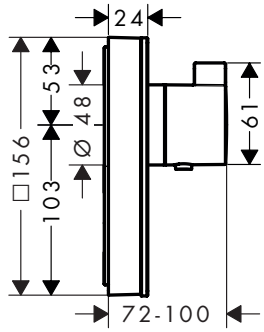

Technologies

Safety Stop 40°C | Thermostat °C | Select SELECT

Certificates/declarations

EPD

Finish	Code no.
White/Chrome	15735400

⚠ **Required parts (choose one):**			Code no.
Option 1		iBox universal 2 Basic set	01500180
+		Adapter plate for iBox universal 2	13588000
Option 2		iBox universal Basic set	01800180

Optional parts:		Finish	Code no.
	ShowerSelect Glass Valve for concealed installation for 3 functions	White/Chrome	15736400

ShowerSelect Glass Valve for concealed installation for 3 functions

Features

- 3 functions
- simultaneous use of several outlets
- Start/stop valve to operate the functions
- maximum flow rate at 3 bar: 30 l/min
- flow rate upper outlet: 26 l/min
- Flow rate left and right: 29 l/min
- flow rate by simultaneous use of all outlets: 44 l/min
- connection type: basic set
- Valve is delivered with buttons Waterfall, Rain large, Mono



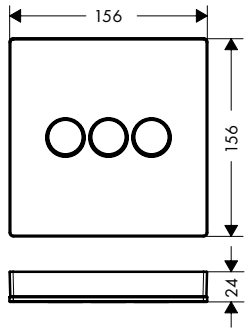

Technologies

Select SELECT

Certificates/declarations

EPD

Finish	Code no.
White/Chrome	15736400

⚠ **Required parts (choose one):**			Code no.
Option 1		iBox universal 2 Basic set	01500180
+		Adapter plate for iBox universal 2	13588000
Option 2		iBox universal Basic set	01800180

Measurements within scale drawings are in mm.
Technical specifications and units of measure are subject to change.

ShowerSelect Glass Valve for concealed installation for 3 functions

Optional parts:		Finish	Code no.
	ShowerSelect Glass Thermostat HighFlow for concealed installation	White/Chrome	15734400
	ShowerSelect Glass Thermostat HighFlow for concealed installation for 1 function and additional outlet	White/Chrome	15735400

Symbol ON/OFF



Finish	Code no.
White	92579450
Black	92579610

Symbol handshower



Finish	Code no.
White	92573450
Black	92573610

Symbol showerhead Rain large



Finish	Code no.
White	92571450
Black	92571610

Symbol showerhead Rain small



Finish	Code no.
White	92572450
Black	92572610

Symbol Rain Flow



Finish	Code no.
White	92574450
Black	92574610

Symbol Whirl



Finish	Code no.
White	92575450
Black	92575610

Symbol Mono



Finish	Code no.
White	92576450
Black	92576610

Symbol Tub



Finish	Code no.
White	92577450
Black	92577610

Symbol Body spray



Finish	Code no.
White	92578450
Black	92578610

ShowerSelect Thermostats for concealed installation

Features of all variants

- thermostat cartridge, Start/stop valve to operate the functions
- min. operating pressure: 1 bar
- max. operating pressure: 10 bar
- Safety stop at 40 °C
- temperature limitation adjustable
- connection type: basic set

1 function



2 functions



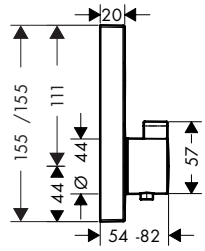

Technologies

Safety Stop 40°C · Thermostat · Select

Certificates/declarations

EPD

Overview variants

Number of functions	Max. flow rate at 3 bar (l/min)	Finish	Code no.
1 function	26.7	Chrome	15762000
2 functions	29.7	Chrome	15763000
		Brushed Bronze	15763140
		Brushed Black Chrome	15763340
		Matt Black	15763670
		Matt White	15763700
		Polished Gold Optic	15763990

Measurements within scale drawings are in mm.
Technical specifications and units of measure are subject to change.

ShowerSelect Thermostats for concealed installation

Required parts (choose one):			Code no.
Option 1		iBox universal 2 Basic set	01500180
		Adapter plate for iBox universal 2	13588000
Option 2		iBox universal Basic set	01800180

ShowerSelect Thermostat for concealed installation for 2 functions with hose connection and shower holder

Features

- consists of: Thermostat, shower holder
- 2 functions
- simultaneous use of several outlets
- Select push-button on/off control for 2 outlets
- thermostat cartridge, Start/stop valve to operate the functions
- maximum flow rate at 3 bar: 29 l/min
- flow rate upper outlet: 29 l/min
- min. operating pressure: 1 bar
- max. operating pressure: 10 bar
- Safety stop at 40 °C
- temperature limitation adjustable
- for shower hoses with a conical nut
- connection type: basic set
- thermostat is delivered with buttons hand shower and Rain large



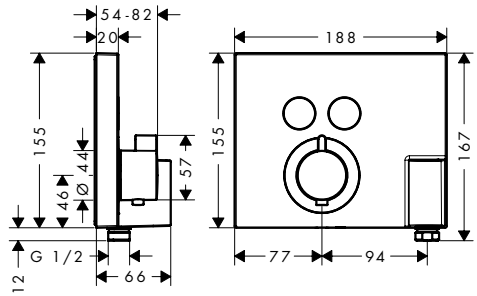

Technologies



Certificates/declarations



Finish	Code no.
Chrome	15765000

Required parts (choose one):			Code no.
Option 1		iBox universal 2 Basic set	01500180
+		Adapter plate for iBox universal 2	13588000
Option 2		iBox universal Basic set	01800180

Measurements within scale drawings are in mm.
Technical specifications and units of measure are subject to change.

ShowerSelect Thermostat HighFlow for concealed installation

Features

- thermostat cartridge
- maximum flow rate at 3 bar: 42 l/min
- flow rate upper outlet: 42 l/min
- flow rate lower outlet: 42 l/min
- min. operating pressure: 1 bar
- max. operating pressure: 10 bar
- Safety stop at 40 °C
- temperature limitation adjustable
- connection type: basic set
- dirt filter included



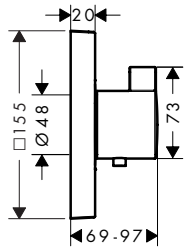

Technologies

Safety Stop 40°C | Thermostat °C

Certificates/declarations

EPD

Finish	Code no.
Chrome	15760000
Brushed Bronze	15760140
Brushed Black Chrome	15760340
Matt Black	15760670
Matt White	15760700
Polished Gold Optic	15760990

Required parts (choose one):			Code no.
Option 1		iBox universal 2 Basic set	01500180
+		Adapter plate for iBox universal 2	13588000
Option 2		iBox universal Basic set	01800180

Optional parts:		Finish	Code no.
	ShowerSelect Valve for concealed installation for 3 functions	Chrome	15764000
		Brushed Bronze	15764140
		Brushed Black Chrome	15764340
		Matt Black	15764670
		Matt White	15764700
		Polished Gold Optic	15764990

Measurements within scale drawings are in mm.
Technical specifications and units of measure are subject to change.

ShowerSelect Thermostat HighFlow for concealed installation for 1 function and additional outlet

Features

- 1 function and 1 additional outlet
- Select push-button on/off control for 1 outlet
- thermostat cartridge, Start/stop valve to operate the functions
- maximum flow rate at 3 bar: 59 l/min
- flow rate upper outlet: 59 l/min
- min. operating pressure: 1 bar
- max. operating pressure: 10 bar
- Safety stop at 40 °C
- temperature limitation adjustable
- connection type: basic set
- dirt filter included
- thermostat is delivered with button hand shower



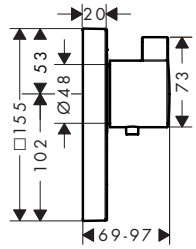

Technologies

Safety Stop 40°C | Thermostat °C | Select SELECT

Certificates/declarations

EPD

Finish	Code no.
Chrome	15761000

Required parts (choose one):			Code no.
Option 1		iBox universal 2 Basic set	01500180
+		Adapter plate for iBox universal 2	13588000
Option 2		iBox universal Basic set	01800180

Optional parts:		Finish	Code no.
	ShowerSelect Valve for concealed installation for 3 functions	Chrome	15764000

ShowerSelect Valve for concealed installation for 3 functions

Features

- 3 functions
- simultaneous use of several outlets
- Start/stop valve to operate the functions
- maximum flow rate at 3 bar: 30 l/min
- flow rate upper outlet: 26 l/min
- Flow rate left and right: 29 l/min
- flow rate by simultaneous use of all outlets: 30 l/min
- connection type: basic set
- valve is delivered with buttons Rain large, Rain small and hand shower



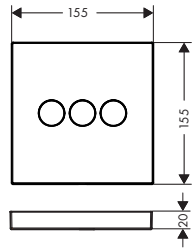

Technologies

Select SELECT

Certificates/declarations

EPD

Finish	Code no.
Chrome	15764000
Brushed Bronze	15764140
Brushed Black Chrome	15764340
Matt Black	15764670
Matt White	15764700
Polished Gold Optic	15764990

For more information about this product, please see the next page.

Measurements within scale drawings are in mm.
Technical specifications and units of measure are subject to change.

ShowerSelect Valve for concealed installation for 3 functions

Required parts (choose one):			Code no.
Option 1		iBox universal 2 Basic set	01500180
+		Adapter plate for iBox universal 2	13588000
Option 2		iBox universal Basic set	01800180

Optional parts:		Finish	Code no.
	ShowerSelect Thermostat HighFlow for concealed installation	Chrome	15760000
		Brushed Bronze	15760140
		Brushed Black Chrome	15760340
		Matt Black	15760670
		Matt White	15760700
		Polished Gold Optic	15760990
	ShowerSelect Thermostat HighFlow for concealed installation for 1 function and additional outlet	Chrome	15761000

ShowerSelect Mixers for concealed installation

Features of all variants

- ceramic cartridge for temperature control, Start/ stop valve to operate the functions
- temperature limitation adjustable
- min. operating pressure: 1 bar
- max. operating pressure: 10 bar
- mixer is delivered with button On/Off
- connection type: basic set

1 function



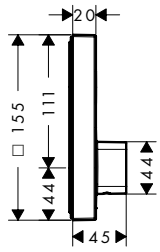

2 functions



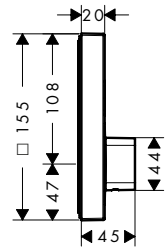

Sustainability

Water Flow Control

Technologies

Select

Certificates/declarations

EPD

Overview variants

Number of functions	Max. flow rate at 3 bar (l/min)	Finish	Code no.
1 function	21	Chrome	15767000
2 functions	22	Chrome	15768000

Required parts (choose one):			Code no.
Option 1		iBox universal 2 Basic set	01500180
+		Adapter plate for iBox universal 2	13588000
Option 2		iBox universal Basic set	01800180

Measurements within scale drawings are in mm.
Technical specifications and units of measure are subject to change.

ShowerSelect S Thermostats for concealed installation

Features of all variants

- thermostat cartridge, Start/stop valve to operate the functions
- min. operating pressure: 1 bar
- max. operating pressure: 10 bar
- Safety stop at 40 °C
- temperature limitation adjustable
- connection type: basic set

1 function



2 functions



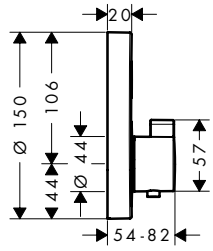

Technologies

Safety Stop 40°C | Thermostat °C | Select SELECT

Certificates/declarations

EPD

Overview variants

Number of functions	Max. flow rate at 3 bar (l/min)	Finish	Code no.
1 function	26.7	Chrome	15744000
2 functions	29.7	Chrome	15743000
		Brushed Bronze	15743140
		Brushed Black Chrome	15743340
		Matt Black	15743670
		Matt White	15743700
		Polished Gold Optic	15743990

Required parts (choose one):			Code no.
Option 1		iBox universal 2 Basic set	01500180
+		Adapter plate for iBox universal 2	13588000
Option 2		iBox universal Basic set	01800180

ShowerSelect S Thermostat HighFlow for concealed installation

Features

- thermostat cartridge
- maximum flow rate at 3 bar: 59 l/min
- flow rate upper outlet: 42 l/min
- flow rate lower outlet: 42 l/min
- min. operating pressure: 1 bar
- max. operating pressure: 10 bar
- Safety stop at 40 °C
- temperature limitation adjustable
- connection type: basic set
- dirt filter included



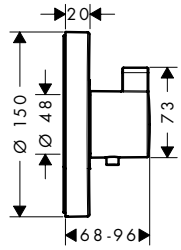

Technologies

Safety Stop 40°C | Thermostat °C

Certificates/declarations

EPD

Finish	Code no.
Chrome	15741000

For more information about this product, please see the next page.

Measurements within scale drawings are in mm.
Technical specifications and units of measure are subject to change.

ShowerSelect S Thermostat HighFlow for concealed installation

Required parts (choose one):			Code no.
Option 1		iBox universal 2 Basic set	01500180
		Adapter plate for iBox universal 2	13588000
Option 2		iBox universal Basic set	01800180

Optional parts:		Finish	Code no.
	ShowerSelect S Valve for concealed installation for 3 functions	Chrome	15745000

ShowerSelect S Thermostat HighFlow for concealed installation for 1 function and additional outlet

Features

- 1 function and 1 additional outlet
- thermostat cartridge
- maximum flow rate at 3 bar: 59 l/min
- flow rate upper outlet: 59 l/min
- min. operating pressure: 1 bar
- max. operating pressure: 10 bar
- Safety stop at 40 °C
- temperature limitation adjustable
- connection type: basic set
- thermostat is delivered with button hand shower



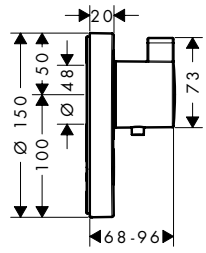

Technologies



Finish	Code no.
Chrome	15742000

Required parts (choose one):			Code no.
Option 1		iBox universal 2 Basic set	01500180
+		Adapter plate for iBox universal 2	13588000
Option 2		iBox universal Basic set	01800180

Optional parts:		Finish	Code no.
	ShowerSelect S Valve for concealed installation for 3 functions	Chrome	15745000

Measurements within scale drawings are in mm.
Technical specifications and units of measure are subject to change.

ShowerSelect S Valve for concealed installation for 3 functions

Features

- 3 functions
- simultaneous use of several outlets
- Start/stop valve to operate the functions
- maximum flow rate at 3 bar: 30 l/min
- flow rate upper outlet: 26 l/min
- Flow rate left and right: 29 l/min
- flow rate by simultaneous use of all outlets: 30 l/min
- min. operating pressure: 1 bar
- max. operating pressure: 10 bar
- connection type: basic set
- Valve is delivered with buttons Rain large, Whirl, Waterfall



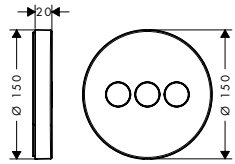

Technologies

Certificates/declarations

Finish	Code no.
Chrome	15745000

Required parts (choose one):			Code no.
Option 1		iBox universal 2 Basic set	01500180
+		Adapter plate for iBox universal 2	13588000
Option 2		iBox universal Basic set	01800180

Optional parts:		Finish	Code no.
	ShowerSelect S Thermostat HighFlow for concealed installation	Chrome	15741000
	ShowerSelect S Thermostat HighFlow for concealed installation for 1 function and additional outlet	Chrome	15742000

ShowerSelect S Mixers for concealed installation

Features of all variants

- ceramic cartridge for temperature control, Start/stop valve to operate the functions
- temperature limitation adjustable
- min. operating pressure: 1 bar
- max. operating pressure: 10 bar
- mixer is delivered with button On/Off
- connection type: basic set

1 function

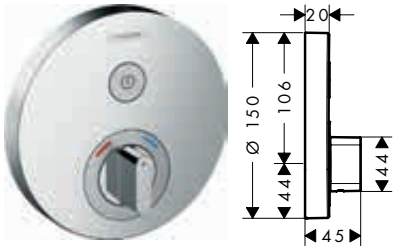

2 functions

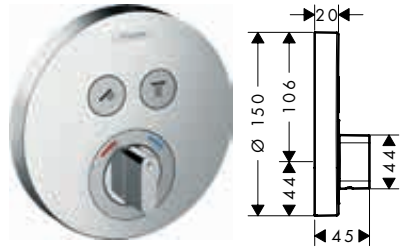

Sustainability

Technologies

Certificates/declarations

Overview variants

Number of functions	Max. flow rate at 3 bar (l/min)	Finish	Code no.
1 function	21	Chrome	15747000
2 functions	22	Chrome	15748000

For more information about this product, please see the next page.

Measurements within scale drawings are in mm.
Technical specifications and units of measure are subject to change.

ShowerSelect S Mixers for concealed installation

Required parts (choose one):			Code no.
Option 1		iBox universal 2 Basic set	01500180
+		Adapter plate for iBox universal 2	13588000
Option 2		iBox universal Basic set	01800180

Symbol ON/OFF



Finish	Code no.
Black	93579610
Matt Black	93579670
Matt White	93579700
Satin Chrome	93579880

Symbol hand shower



Finish	Code no.
Black	93573610
Matt Black	93573670
Matt White	93573700
Satin Chrome	93573880

Symbol overhead shower Rain large

Finish	Code no.
Black	93571610
Matt Black	93571670
Matt White	93571700
Satin Chrome	93571880

Symbol Rain Flow



Finish	Code no.
Black	93574610
Matt Black	93574670
Matt White	93574700
Satin Chrome	93574880

Measurements within scale drawings are in mm.
Technical specifications and units of measure are subject to change.

Symbol Whirl



Finish	Code no.
Black	93575610
Matt Black	93575670
Matt White	93575700
Satin Chrome	93575880

Symbol Mono



Finish	Code no.
Black	93576610
Matt Black	93576670
Matt White	93576700
Satin Chrome	93576880

Symbol tub



Finish	Code no.
Black	93577610
Matt Black	93577670
Matt White	93577700
Satin Chrome	93577880

Symbol Oldalzuhany



Finish	Code no.
Black	93578610
Matt Black	93578670
Matt White	93578700
Satin Chrome	93578880

Ecostat S Thermostats for concealed installation

Features of all variants

- min. operating pressure: 1 bar
- max. operating pressure: 10 bar
- Safety stop at 40 °C
- temperature limitation adjustable
- connection type: basic set

1 function



2 functions



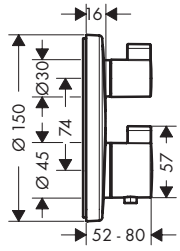

Sustainability

Water Flow Control

Technologies

Safety Stop 40 °C | Thermostat

Certificates/declarations

EPD

Overview variants

Number of functions	Max. flow rate at 3 bar (l/min)	Finish	Code no.
1 function	26.5	Chrome	15757000
2 functions	29	Chrome	15758000
		Brushed Bronze	15758140
		Brushed Black Chrome	15758340
		Matt Black	15758670
		Matt White	15758700
		Polished Gold Optic	15758990

Required parts (choose one):			Code no.
Option 1		iBox universal 2 Basic set	01500180
	+		
		Adapter plate for iBox universal 2	13588000
Option 2		iBox universal Basic set	01800180

Ecostat S Thermostat HighFlow for concealed installation

Features

- thermostat cartridge
- maximum flow rate at 3 bar: 59 l/min
- flow rate upper outlet: 42 l/min
- flow rate lower outlet: 42 l/min
- min. operating pressure: 1 bar
- max. operating pressure: 10 bar
- Safety stop at 40 °C
- temperature limitation adjustable
- connection type: basic set



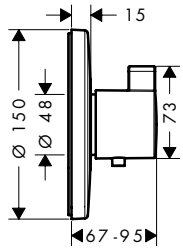

Technologies

Safety Stop 40 °C | Thermostat

Certificates/declarations

EPD

Finish	Code no.
Chrome	15756000

Required parts (choose one):			Code no.
Option 1		iBox universal 2 Basic set	01500180
	+		
		Adapter plate for iBox universal 2	13588000
Option 2		iBox universal Basic set	01800180

Measurements within scale drawings are in mm.
Technical specifications and units of measure are subject to change.

Ecostat S Thermostat for concealed installation

Features

- thermostat cartridge
- maximum flow rate at 3 bar: 37 l/min
- min. operating pressure: 1 bar
- max. operating pressure: 10 bar
- Safety stop at 40 °C
- temperature limitation adjustable
- connection type: basic set



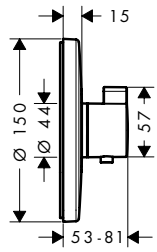

Technologies

Safety Stop 40°C | Thermostat °C

Certificates/declarations

EPD

Finish	Code no.
Chrome	15755000

Required parts (choose one):			Code no.
Option 1	 + 	iBox universal 2 Basic set Adapter plate for iBox universal 2	01500180 13588000
Option 2		iBox universal Basic set	01800180

Shut-off/ diverter valve S Trio/ Quattro for concealed installation

Features

- 3 functions



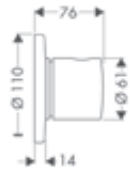

Finish	Code no.
Chrome	15932000

Required parts (choose one):		Code no.
	Basic set for Trio shut-off/ diverter valve for concealed installation	15981180
	Basic set for Quattro four-way diverter valve for concealed installation	15930180

Measurements within scale drawings are in mm.
Technical specifications and units of measure are subject to change.

Shut-off valve S for concealed installation



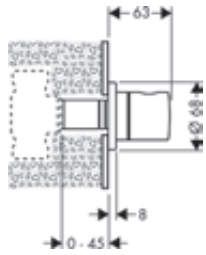

Finish	Code no.
Chrome	15972000

Required parts (choose one):	Code no.
Basic set 40 l/min for shut-off valve for concealed installation ceramic	15974180
Basic set 52 l/min for shut-off valve for concealed installation spindle	15973180
Basic set 130 l/min for shut-off valve for concealed installation spindle	15970180

Optional parts:	Code no.
Extension set 2.5 cm	96370000

Metris Shut-off valve E for concealed installation

Features

· connection type: DN15/DN20



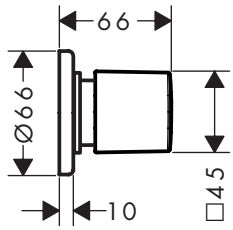

Certificates/declarations

Finish	Code no.
Chrome	31677000

Required parts (choose one):	Code no.
Basic set 40 l/min for shut-off valve for concealed installation ceramic	15974180
Basic set 52 l/min for shut-off valve for concealed installation spindle	15973180
Basic set 130 l/min for shut-off valve for concealed installation spindle	15970180

Optional parts:	Code no.
Extension set 2.5 cm	96370000

Measurements within scale drawings are in mm.
Technical specifications and units of measure are subject to change.

Logis Shut-off valve for concealed installation

Features

· connection type: DN15/DN20



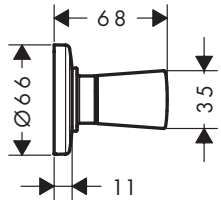

Finish	Code no.
Chrome	71970000

Required parts (choose one):		Code no.
	Basic set 40 l/min for shut-off valve for concealed installation ceramic	15974180
	Basic set 52 l/min for shut-off valve for concealed installation spindle	15973180
	Basic set 130 l/min for shut-off valve for concealed installation spindle	15970180

Optional parts:		Code no.
	Extension set 2.5 cm	96370000

Ecostat Square Thermostats for concealed installation

Features of all variants

· min. operating pressure: 1 bar
· max. operating pressure: 10 bar
· Safety stop at 40 °C
· temperature limitation adjustable
· connection type: basic set

1 function



2 functions



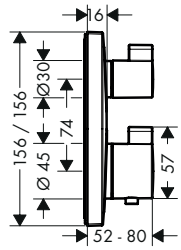

Sustainability

Water Flow Control

Technologies

Safety Stop 40°C | Thermostat

Certificates/declarations

EPD

Overview variants

Number of functions	Max. flow rate at 3 bar (l/min)	Finish	Code no.
1 function	26.5	Chrome	15712000
2 functions	29	Chrome	15714000
		Brushed Bronze	15714140
		Brushed Black Chrome	15714340
		Matt Black	15714670
		Matt White	15714700
		Polished Gold Optic	15714990

Required parts (choose one):			Code no.
Option 1		iBox universal 2 Basic set	01500180
	+		
		Adapter plate for iBox universal 2	13588000
Option 2		iBox universal Basic set	01800180

Measurements within scale drawings are in mm.
Technical specifications and units of measure are subject to change.

Ecostat E Shower thermostats for concealed installation

Features of all variants

- min. operating pressure: 1 bar
- max. operating pressure: 10 bar
- Safety stop at 40 °C
- temperature limitation adjustable
- connection type: basic set

1 function



2 functions



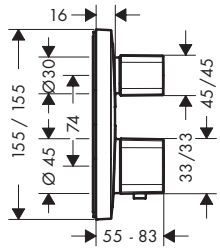

Sustainability

Water Flow Control

Technologies

Safety Stop 40°C | Thermostat

Certificates/declarations

EPD

Overview variants

Number of functions	Max. flow rate at 3 bar (l/min)	Finish	Code no.
1 function	26.5	Chrome	15707000
2 functions	29	Chrome	15708000

Required parts (choose one):			Code no.
Option 1		iBox universal 2 Basic set	01500180
	+		
		Adapter plate for iBox universal 2	13588000
Option 2		iBox universal Basic set	01800180

Ecostat E Thermostat for concealed installation

Features

- thermostat cartridge
- maximum flow rate at 3 bar: 37 l/min
- min. operating pressure: 1 bar
- max. operating pressure: 10 bar
- Safety stop at 40 °C
- temperature limitation adjustable
- connection type: basic set



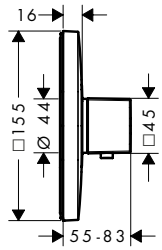

Technologies

Safety Stop 40°C | Thermostat

Certificates/declarations

EPD

Finish	Code no.
Chrome	15705000

Required parts (choose one):			Code no.
Option 1		iBox universal 2 Basic set	01500180
	+		
		Adapter plate for iBox universal 2	13588000
Option 2		iBox universal Basic set	01800180

Measurements within scale drawings are in mm.
Technical specifications and units of measure are subject to change.

Ecostat E Thermostat HighFlow for concealed installation

Features

- thermostat cartridge
- maximum flow rate at 3 bar: 59 l/min
- flow rate upper outlet: 42 l/min
- flow rate lower outlet: 42 l/min
- min. operating pressure: 1 bar
- max. operating pressure: 10 bar
- Safety stop at 40 °C
- temperature limitation adjustable
- connection type: basic set



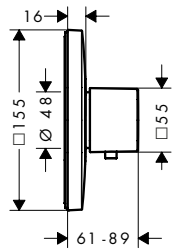

Technologies



Finish	Code no.
Chrome	15706000

Required parts (choose one):			Code no.
Option 1		iBox universal 2 Basic set	01500180
	+		
		Adapter plate for iBox universal 2	13588000
Option 2		iBox universal Basic set	01800180

Measurements within scale drawings are in mm.
Technical specifications and units of measure are subject to change.

DuoTurn S Mixer for concealed installation for 1 function

Features

- 1 function
- volume control for 1 function
- maximum flow rate at 3 bar: 29,5 l/min
- ceramic cartridge for temperature control, 1/2" ceramic shut-off valve
- flat escutcheon for more space in the shower
- easy installation due to pre-assembled function block
- handles always at the same height regardless of the installation depth of the basic set
- escutcheon can be aligned by +/- 3°
- material escutcheon: plastic
- material handles: metal
- min. operating pressure: 1 bar
- max. operating pressure: 10 bar
- mixer is delivered with button hand shower
- connection type: basic set iBox universal 2 (# 01500180)



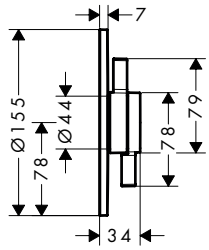

Sustainability

Water Flow Control

Finish	Code no.
Chrome	75618000
Brushed Bronze	75618140
Matt Black	75618670
Matt White	75618700

Required parts:	Code no.
iBox universal 2 Basic set	01500180

DuoTurn S Mixer for concealed installation for 2 functions

Features

- 2 functions
- volume control and diverter for 2 functions
- maximum flow rate at 3 bar: 29,5 l/min
- flow rate upper outlet: 29,5 l/min
- flow rate lower outlet: 29,5 l/min
- ceramic cartridge for temperature control, shut-off/ diverter valve
- flat escutcheon for more space in the shower
- easy installation due to pre-assembled function block
- handles always at the same height regardless of the installation depth of the basic set
- escutcheon can be aligned by +/- 3°
- material escutcheon: plastic
- material handles: metal
- min. operating pressure: 1 bar
- max. operating pressure: 10 bar
- mixer is delivered with buttons Rain small, Rain large, hand sower, Waterfall, bath tub
- connection type: basic set iBox universal 2 (# 01500180)



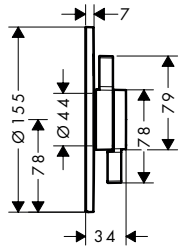

Sustainability

Water Flow Control

Finish	Code no.
Chrome	75418000
Brushed Bronze	75418140
Matt Black	75418670
Matt White	75418700

Required parts:	Code no.
iBox universal 2 Basic set	01500180

Measurements within scale drawings are in mm.
Technical specifications and units of measure are subject to change.

DuoTurn E Mixer for concealed installation for 1 function

Features

- 1 function
- volume control for 1 function
- maximum flow rate at 3 bar: 29,5 l/min
- ceramic cartridge for temperature control, 1/2" ceramic shut-off valve
- flat escutcheon for more space in the shower
- easy installation due to pre-assembled function block
- handles always at the same height regardless of the installation depth of the basic set
- escutcheon can be aligned by +/- 3 °
- material escutcheon: plastic
- material handles: metal
- min. operating pressure: 1 bar
- max. operating pressure: 10 bar
- mixer is delivered with button hand shower
- connection type: basic set iBox universal 2 (# 01500180)



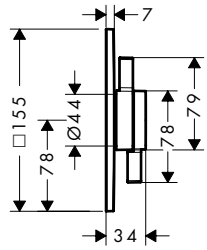

Sustainability

Water Flow Control

Finish	Code no.
Chrome	75617000
Brushed Bronze	75617140
Matt Black	75617670
Matt White	75617700

Required parts:	Code no.
iBox universal 2 Basic set	01500180

DuoTurn E Mixer for concealed installation for 2 functions

Features

- 2 functions
- volume control and diverter for 2 functions
- maximum flow rate at 3 bar: 29,5 l/min
- flow rate upper outlet: 29,5 l/min
- flow rate lower outlet: 29,5 l/min
- ceramic cartridge for temperature control, shut-off/ diverter valve
- flat escutcheon for more space in the shower
- easy installation due to pre-assembled function block
- handles always at the same height regardless of the installation depth of the basic set
- escutcheon can be aligned by +/- 3 °
- material escutcheon: plastic
- material handles: metal
- min. operating pressure: 1 bar
- max. operating pressure: 10 bar
- mixer is delivered with buttons Rain small, Rain large, hand sower, Waterfall, bath tub
- connection type: basic set iBox universal 2 (# 01500180)



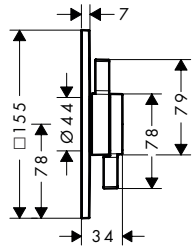

Sustainability

Water Flow Control

Finish	Code no.
Chrome	75417000
Brushed Bronze	75417140
Matt Black	75417670
Matt White	75417700

Required parts:	Code no.
iBox universal 2 Basic set	01500180

Measurements within scale drawings are in mm.
Technical specifications and units of measure are subject to change.

DuoTurn Q Mixer for concealed installation for 1 function

Features

- 1 function
- volume control for 1 function
- maximum flow rate at 3 bar: 29,5 l/min
- ceramic cartridge for temperature control, 1/2" ceramic shut-off valve
- flat escutcheon for more space in the shower
- easy installation due to pre-assembled function block
- handles always at the same height regardless of the installation depth of the basic set
- escutcheon can be aligned by +/- 3°
- material escutcheon: plastic
- material handles: metal
- min. operating pressure: 1 bar
- max. operating pressure: 10 bar
- mixer is delivered with button hand shower
- connection type: basic set iBox universal 2 (# 01500180)



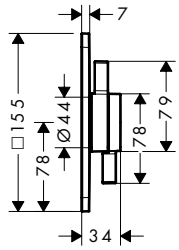

Sustainability

Water Flow Control

Finish	Code no.
Chrome	75614000
Brushed Bronze	75614140
Matt Black	75614670
Matt White	75614700

Required parts: Code no.



iBox universal 2 Basic set — 01500180

DuoTurn Q Mixer for concealed installation for 2 functions

Features

- 2 functions
- volume control and diverter for 2 functions
- maximum flow rate at 3 bar: 29,5 l/min
- flow rate upper outlet: 29,5 l/min
- flow rate lower outlet: 29,5 l/min
- ceramic cartridge for temperature control, shut-off/ diverter valve
- flat escutcheon for more space in the shower
- easy installation due to pre-assembled function block
- handles always at the same height regardless of the installation depth of the basic set
- escutcheon can be aligned by +/- 3°
- material escutcheon: plastic
- material handles: metal
- min. operating pressure: 1 bar
- max. operating pressure: 10 bar
- mixer is delivered with buttons Rain small, Rain large, hand sower, Waterfall, bath tub
- connection type: basic set iBox universal 2 (# 01500180)



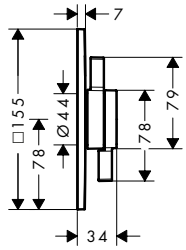

Sustainability

Water Flow Control

Finish	Code no.
Chrome	75414000
Brushed Bronze	75414140
Matt Black	75414670
Matt White	75414700

Required parts: Code no.



iBox universal 2 Basic set — 01500180

Measurements within scale drawings are in mm.
Technical specifications and units of measure are subject to change.



Basic sets

iBox universal 2 Basic set

Features

- suitable for all new shower, bath tub and thermostat finish sets for concealed installation
- material: dezincification brass, EPP foam, heat and sound insulating
- connection thread Rp ½
- connection dimension: DN15
- rotationally-symmetric installation
- sound-decoupled installation
- flexible mounting ring for different mounting situations
- mounting ring adjustable in 5 mm steps
- mounting ring suitable for front and rear installation
- no shortening necessary thanks to sliding sleeve
- support aid for the spirit level
- integrated spirit level for correct horizontal and vertical alignment
- sealing foil permanently fixed
- power supply: M16 flexible conduit
- minimum mounting depth: 80 mm
- maximum mounting depth: 108 mm



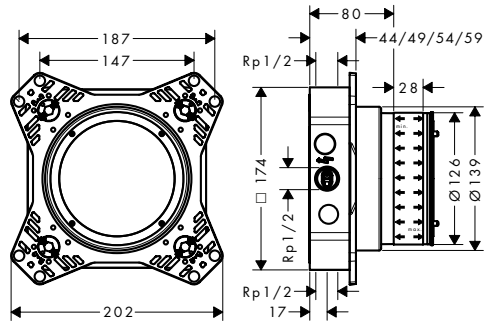

Technologies

Easy Installation

Installation

Water Damage Protection

	Code no.
	01500180

Optional parts:		Code no.
	Adapter plate for iBox universal 2	13588000
	Extension iBox universal 2 basic set 25 mm	13637000
	Extension finish sets 25 - 75 mm	13632000
	Extension finish sets 25 mm	13638000

Adapter plate for iBox universal 2

Features

- is required when installing iBox universal (# 01800180) compatible overhead showers, shower, bath tub and thermostat finish sets for concealed installation in conjunction with the iBox universal 2 (# 01500180)



	Code no.
	13588000

Measurements within scale drawings are in mm.
Technical specifications and units of measure are subject to change.

Extension iBox universal 2 basic set 25 mm

Features

- extension for basic set
- is required if the basic set is installed too deep
- extension length: 25 mm



Code no.
13637000

Extension finish sets 25 - 75 mm

Features

- extension for finish sets ShowerSelect Comfort and DuoTurn
- is required if the basic set is installed too deep
- extension length: 25 - 75 mm
- extension length for valve 3 functions max. 50 mm



Code no.
13632000

Extension finish sets 25 mm

Features

- extension for finish sets ShowerSelect Comfort and DuoTurn
- is required if the basic set is installed too deep
- extension length: 25 mm



Code no.
13638000

Extension element 5 mm

Features

- for installation between tiles and finish set
- is required if the basic set is installed too flat
- for larger tile coverage
- suitable for ShowerSelect Comfort and DuoTurn (for DuoTurn please order the adapter from the optional parts)
- dimension: 170 x 170 mm
- extension length: 5 mm



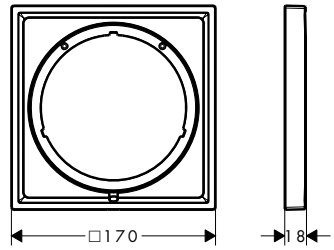

Finish	Code no.
Chrome	13612000
Brushed Bronze	13612140
Brushed Black Chrome	13612340
Matt Black	13612670
Matt White	13612700

Optional parts:	Code no.
DuoTurn E/Q Adapter for extension element	13628000

Extension element 22 mm

Features

- for installation between tiles and finish set
- is required if the basic set is installed too flat
- for larger tile coverage
- suitable for ShowerSelect Comfort and DuoTurn (for DuoTurn please order the adapter from the optional parts)
- dimension: 170 x 170 mm
- extension length: 22 mm



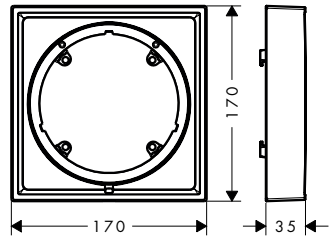

Finish	Code no.
Chrome	13617000
Brushed Bronze	13617140
Brushed Black Chrome	13617340
Matt Black	13617670
Matt White	13617700

Optional parts:	Code no.
DuoTurn E/Q Adapter for extension element	13628000

Extension element 5 mm

Features

- for installation between tiles and finish set
- is required if the basic set is installed too flat
- for larger tile coverage
- suitable for ShowerSelect Comfort and DuoTurn (for DuoTurn please order the adapter from the optional parts)
- dimension: 170 x 170 mm
- extension length: 5 mm



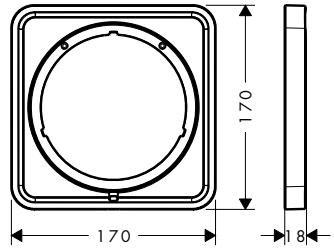

Finish	Code no.
Chrome	13613000
Brushed Bronze	13613140
Brushed Black Chrome	13613340
Matt Black	13613670
Matt White	13613700

Optional parts:	Code no.
DuoTurn E/Q Adapter for extension element	13628000

Measurements within scale drawings are in mm.
Technical specifications and units of measure are subject to change.

Extension element 22 mm

Features

- for installation between tiles and finish set
- is required if the basic set is installed too flat
- for larger tile coverage
- suitable for ShowerSelect Comfort and DuoTurn (for DuoTurn please order the adapter from the optional parts)
- dimension: 170 x 170 mm
- extension length: 22 mm



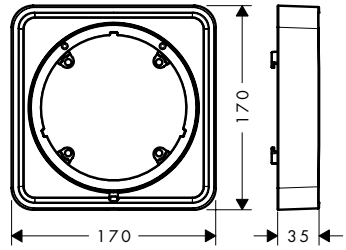

Finish	Code no.
Chrome	13618000
Brushed Bronze	13618140
Brushed Black Chrome	13618340
Matt Black	13618670
Matt White	13618700

Optional parts:	Code no.
DuoTurn E/Q Adapter for extension element	13628000

DuoTurn E/Q Adapter for extension element

Features

- is required if the basic set is installed too flat

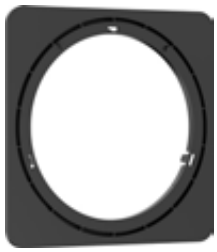

Code no.
13628000

Extension element 5 mm

Features

- for installation between tiles and finish set
- is required if the basic set is installed too flat
- for larger tile coverage
- suitable for ShowerSelect Comfort and DuoTurn (for DuoTurn please order the adapter from the optional parts)
- diameter: 170 mm
- extension length: 5 mm



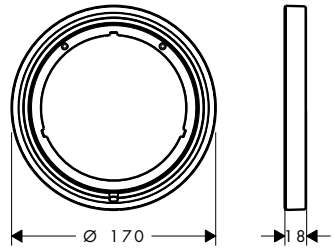

Finish	Code no.
Chrome	13614000
Brushed Bronze	13614140
Brushed Black Chrome	13614340
Matt Black	13614670
Matt White	13614700

Optional parts:	Code no.
DuoTurn S Adapter for extension element	13631000

Measurements within scale drawings are in mm.
Technical specifications and units of measure are subject to change.

Extension element 22 mm

Features

- for installation between tiles and finish set
- is required if the basic set is installed too flat
- for larger tile coverage
- suitable for ShowerSelect Comfort and DuoTurn (for DuoTurn please order the adapter from the optional parts)
- diameter: 170 mm
- extension length: 22 mm



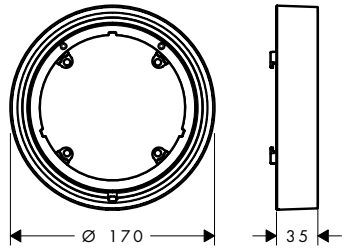

Finish	Code no.
Chrome	13624000
Brushed Bronze	13624140
Brushed Black Chrome	13624340
Matt Black	13624670
Matt White	13624700

Optional parts:	Code no.
DuoTurn S Adapter for extension element	13631000

DuoTurn S Adapter for extension element

Features

- is required if the basic set is installed too flat



	Code no.
	13631000

Measurements within scale drawings are in mm.
Technical specifications and units of measure are subject to change.

iBox universal Basic set

Features

- suitable for all shower, bath tub and thermostat finish sets for concealed installation
- connection thread Rp ¾
- connection dimension: DN20
- rotationally-symmetric installation
- sound-decoupled installation
- minimum mounting depth: 80 mm
- maximum mounting depth: 108 mm



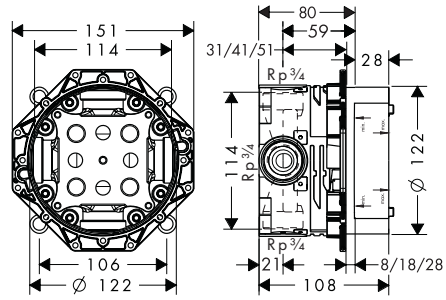

Certificates/declarations

EPD

Code no.
01800180

Optional parts:	Code no.
Extension iBox universal basic set 2.5 cm	13595000
Fastening rail set for iBox universal	96615000
Assembly aid for iBox universal + iBox universal 2	93500000
Reduction coupling iBox universal	97759000

iBox universal Basic set with shut-off unit

Features

- suitable for all shower, bath tub and thermostat finish sets for concealed installation
- connection thread Rp ¾
- connection dimension: DN20
- sound-decoupled installation



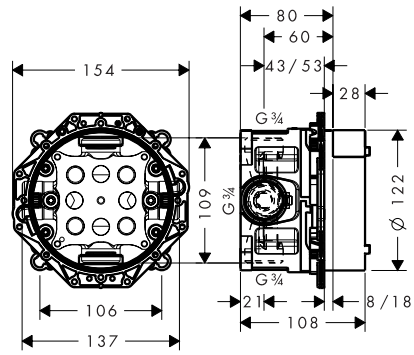

Certificates/declarations

EPD

Code no.
01850180

Optional parts:	Code no.
Extension iBox universal basic set 2.5 cm	13595000
Fastening rail set for iBox universal	96615000
Assembly aid for iBox universal + iBox universal 2	93500000
Reduction coupling iBox universal	97759000

Measurements within scale drawings are in mm.
Technical specifications and units of measure are subject to change.

Assembly aid for iBox universal + iBox universal 2

Features

- spirit levels for correct horizontal and vertical alignment of the iBox universal
- with fixations to simply put the assembly aid on the iBox universal
- markings for the tile spacer
- 4 more fixation aids all around, thus against rotation



Code no.
93500000

Extension iBox universal basic set 2.5 cm

Features

- extension for basic set
- extension length: 25 mm

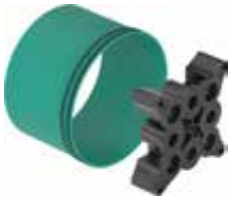

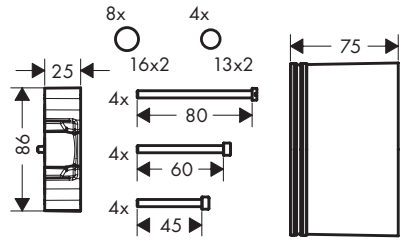

Code no.
13595000

Required parts:		Code no.
	iBox universal Basic set	01800180
	iBox universal Basic set with shut-off unit	01850180

Flushing board iControl



Finish	Code no.
Chrome	15956000

Measurements within scale drawings are in mm.
Technical specifications and units of measure are subject to change.

Fastening rail set for iBox universal

Features

- quick installation and alignment of the iBox universal in various installation situations
- for bridging large or wide wall recesses
- individually bendable for pre-wall mounting



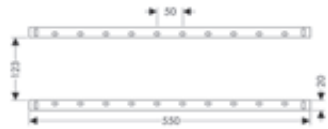

Code no.
96615000

ShowerSelect Extension element

Features

- for installation between tiles and finish set
- suitable for all shower and bath tub finish sets Ø 150 mm
- diameter: 157 mm
- extension length: 22 mm





Finish	Code no.
Chrome	13593000
Brushed Bronze	13593140
Brushed Black Chrome	13593340
Matt Black	13593670
Matt White	13593700
Polished Gold Optic	13593990

ShowerSelect Glass Extension element

Features

- for installation between tiles and finish set
- diameter: 157 mm
- extension length: 22 mm





Finish	Code no.
Chrome	13604000

Measurements within scale drawings are in mm.
Technical specifications and units of measure are subject to change.

Extension element 15 cm

Features

- for installation between tiles and finish set
- suitable for all shower and bath tub finish sets Ø 150 mm
- diameter: 152 mm
- extension length: 22 mm



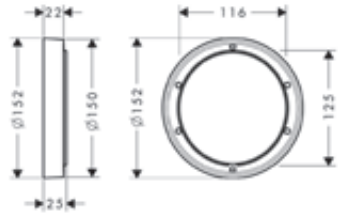

Finish	Code no.
Chrome	13597000
Brushed Bronze	13597140
Brushed Black Chrome	13597340
Matt Black	13597670
Matt White	13597700

Extension element ShowerSelect FixFit Porter

Features

- for installation between tiles and finish set
- extension length: 22 mm



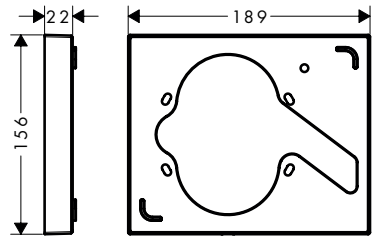

Finish	Code no.
Chrome	13601000

Optional parts:		Finish	Code no.
	ShowerSelect Thermostat for concealed installation for 2 functions with hose connection and shower holder	Chrome	15765000

Measurements within scale drawings are in mm.
Technical specifications and units of measure are subject to change.

sBox Finish sets

Features of all variants

- consists of: hose box, shower hose, escutcheon
- suitable for rim or tile mounted installation
- 1 function
- sBox for quiet, smooth and protected hose guidance
- connection dimension: DN15
- no additional maintenance opening required
- bath rim width at least 100 mm
- clamping range: 0 - 30 mm
- maximum pull-out length of hand shower 1.45 m
- removable for service at any time
- protected against backflow, according to DIN EN 1717
- maximum flow rate at 3 bar: 9,5 l/min

square



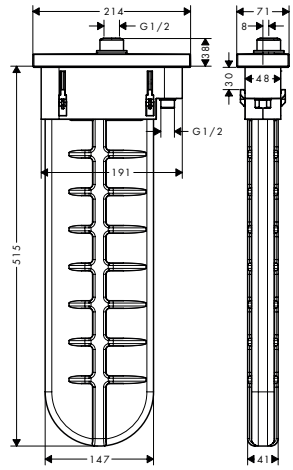

oval



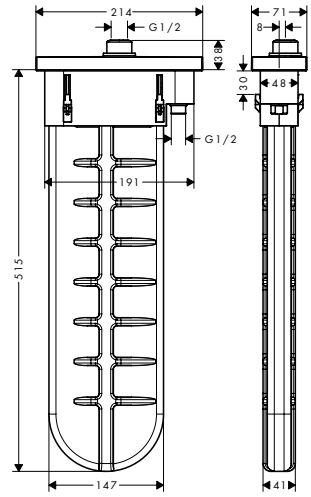

Certificates/declarations

EPD

Overview variants

Shape	Finish	Code no.
square	Chrome	28010000
	Brushed Bronze	28010140
	Brushed Black Chrome	28010340
	Matt Black	28010670
	Matt White	28010700
	Polished Gold Optic	28010990
oval	Chrome	28020000
	Brushed Bronze	28020140
	Brushed Black Chrome	28020340
	Matt Black	28020670
	Matt White	28020700
	Polished Gold Optic	28020990

Required parts:		Code no.
	sBox Rim and tile mounted bath basic set	13560180

Optional parts:		Finish	Code no.
	sBox Installation plate for tile mounted installation		28016000
	sBox Mounting angle set for installation plate for tile mounted installation		28021000
	Rim mounted adapter 25°	Chrome	28071000

Measurements within scale drawings are in mm.
Technical specifications and units of measure are subject to change.

Basic set for 3-hole rim mounted single lever bath mixer

Features

- sBox for quiet, smooth and protected hose guidance
- drilling diameter: 35 mm, 50 mm
- clamping range: 0 - 30 mm
- maximum pull-out length of hand shower: 1,45 m
- suitable for installation on bath rim
- connection thread: G ½
- connection hose length: 600 mm
- connection dimension: DN15
- bath rim width at least 100 mm
- drilling diameter on bath tub: two drilled holes Ø 50/51 mm and connection by sawing out required (consider template)



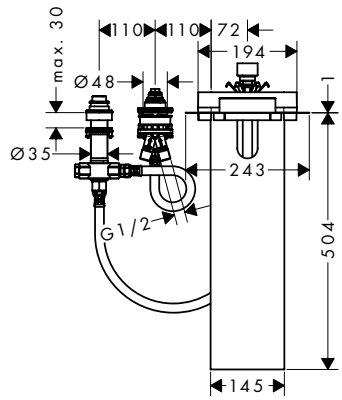

Code no.
13481180

sBox Rim and tile mounted bath basic set

Features

- suitable for rim or tile mounted installation
- 1 function
- connection thread G ½
- connection dimension: DN15
- connection hose length: 600 mm
- bath rim width at least 100 mm
- drilling diameter on bath tub: two drilled holes Ø 50/51 mm and connection by sawing out required (consider template)
- clamping range: 0 - 30 mm



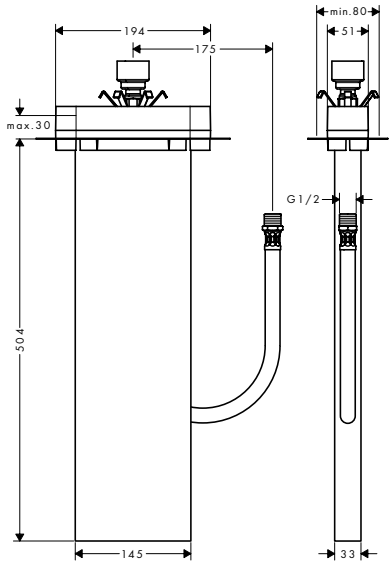

Certificates/declarations

Code no.
13560180

Optional parts:	Code no.
 sBox Installation plate for tile mounted installation	28016000
 sBox Mounting angle set for installation plate for tile mounted installation	28021000

Measurements within scale drawings are in mm.
Technical specifications and units of measure are subject to change.

sBox Installation plate for tile mounted installation

Features

· dimension: 350 x 120 mm



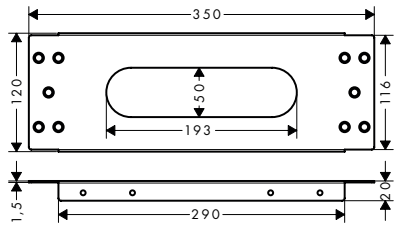

Code no.
28016000

sBox Mounting angle set for installation plate for tile mounted installation

Features

· maximum mounting height: 750 mm · minimum mounting height: 400 mm · packaging unit: 2 pieces



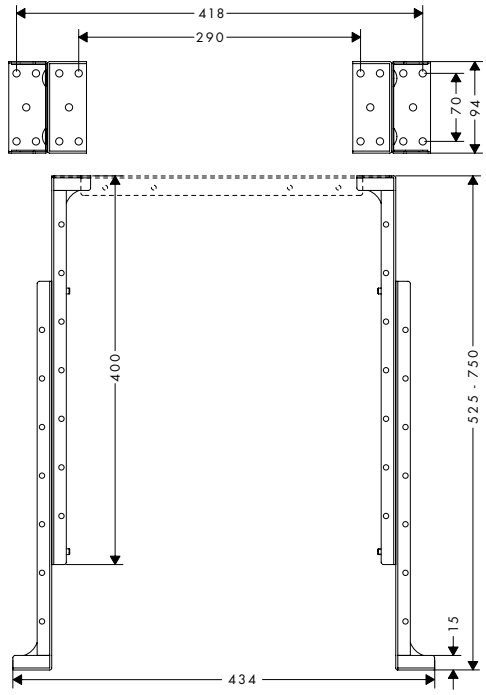

Code no.
28021000

Measurements within scale drawings are in mm.
Technical specifications and units of measure are subject to change.

Basic set for single lever basin mixer for concealed installation wall-mounted

Features

- variable positioning of the mixer system, can be left or right of the spout
- easy orientation due to support surfaces for the spirit level
- with building protection cover against contamination during assembly
- with dimension indication for exact determination of the installation depth
- with pre-mounted fastening lugs for mounting in drywall and solidwall
- sound-decoupled installation
- connection dimension: DN15
- minimum mounting depth: 44 mm
- maximum mounting depth: 72 mm



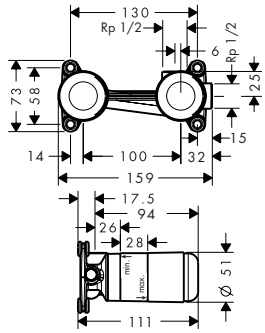

Certificates/declarations

	Code no.
	13622180

Optional parts:	Code no.
Extension set 2.5 cm	31971000

Basic set for single lever basin mixer for concealed installation wall-mounted

Features

- variable positioning of the mixer system, can be left or right of the spout
- easy orientation due to support surfaces for the spirit level
- with building protection cover against contamination during assembly
- with dimension indication for exact determination of the installation depth
- with pre-mounted fastening lugs for mounting in drywall and solidwall
- sound-decoupled installation
- connection dimension: DN15
- minimum mounting depth: 44 mm
- maximum mounting depth: 72 mm



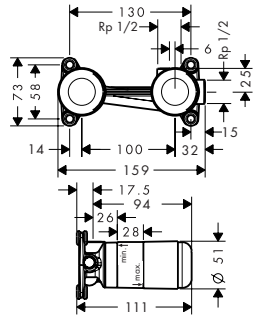

Certificates/declarations

	Code no.
	13622187

Optional parts:	Code no.
Extension set 2.5 cm	31971000

Measurements within scale drawings are in mm.
Technical specifications and units of measure are subject to change.

Basic set for single lever basin mixer for concealed installation wall-mounted

Features

- positioning of the mixer system only possible on the right, spout left
- connection dimension: DN15
- maximum flow rate at 3 bar: 5 l/min



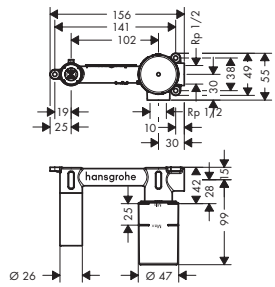

	Code no.
	71577187

Required parts:	Code no.
Basic set for single lever basin mixer for concealed installation wall-mounted	71577187

Optional parts:	Finish	Code no.
Extension set 25 mm	Chrome	71556007

Basic set for mixers floor-standing

Features

- for mounting on unfinished floor
- suitable for single lever bath mixer, single lever basin mixer and bath spout floor-standing
- connection dimension: DN15
- minimum mounting depth: 53 mm
- maximum mounting depth: 133 mm



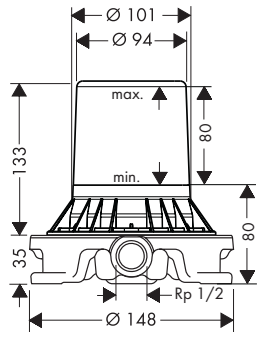

Certificates/declarations

EPD

	Code no.
	10452180

Optional parts:	Code no.
Sealing foil for basic set bath mixer floor-standing	96441000

Measurements within scale drawings are in mm.
Technical specifications and units of measure are subject to change.

Basic set for 2-hole rim mounted bath mixer

Features

- suitable for remote spout
- connection thread: G ½
- connection dimension: DN15
- ceramic cartridge
- flow rate upper outlet: 18,9 l/min
- flow rate lower outlet: 18,9 l/min



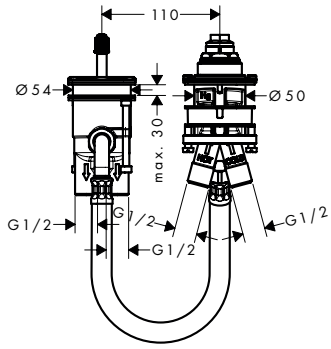

	Code no.
	13159180

Optional parts:	Finish	Code no.
Connection tube set for 2-hole rim mounted thermostatic bath mixer		96387000
Flexible connection tube 80 cm		58192000
Rim mounted bath set with hand shower	Chrome	19418000

Basic set for 3-hole rim mounted bath mixer

Features

- maintenance opening required
- connection thread: G ½
- connection dimension: DN15
- ceramic valves hot/cold 90°



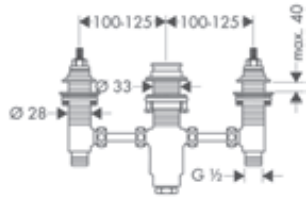

	Code no.
	13233180

Basic set for 3-hole rim mounted single lever bath mixer

Features

- consists of: basic set, shower holder, shower hose
- maximum pull-out length of hand shower: 1.60 m
- maintenance opening required
- connection dimension: G ½



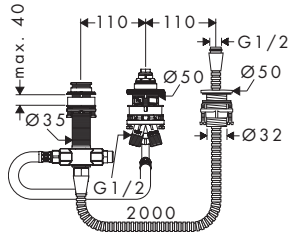

Certificates/declarations

EPD

	Code no.
	13439180

Measurements within scale drawings are in mm.
Technical specifications and units of measure are subject to change.

Basic set for 3-hole rim mounted single lever bath mixer

Features

- consists of: basic set, shower hose, Secubox
- maximum pull-out length of hand shower: 1.10 m
- connection thread: G ½
- connection dimension: DN15



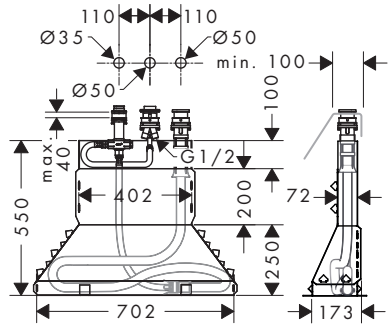

Certificates/declarations

EPD

Code no.
13437180

Optional parts:	Code no.
Secuflex insert extension	98806000

Basic set for 4-hole rim mounted bath mixer

Features

- consists of: basic set, shower holder, shower hose
- maximum pull-out length of hand shower: 1.60 m
- maintenance opening required
- suitable for 4-hole rim mounted bath mixer
- connection thread: G ½
- connection dimension: DN15
- ceramic valves hot/cold 90°



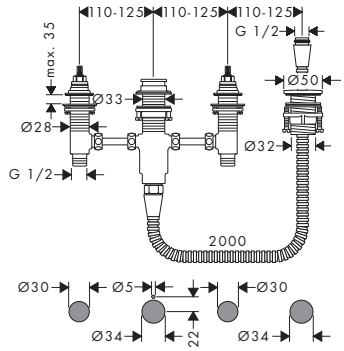

Certificates/declarations

EPD

Code no.
13244180

Basic set for 4-hole rim mounted bath mixer

Features

- connection thread: G ½
- connection dimension: DN15
- bath rim width at least 100 mm



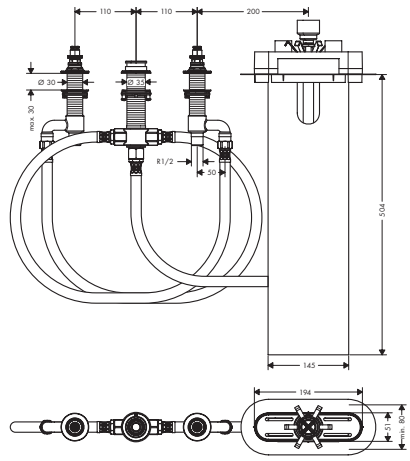

Code no.
13440180

Measurements within scale drawings are in mm.
Technical specifications and units of measure are subject to change.

Basic set for 4-hole rim mounted bath mixer

Features

- consists of: basic set, shower hose, Secubox
- maximum pull-out length of hand shower: 1.10 m
- connection dimension: DN15



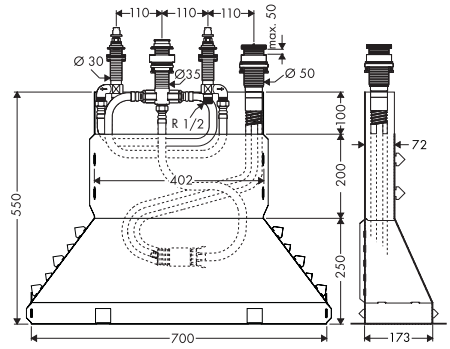

Certificates/declarations

EPD

Code no.
13444180

Optional parts:	Code no.
Secuflex insert extension	98806000

Basic set for single lever bath mixer for concealed installation

Features

- connection dimension: DN15
- ceramic cartridge
- temperature limitation adjustable
- minimum mounting depth: 55 mm
- maximum mounting depth: 83 mm



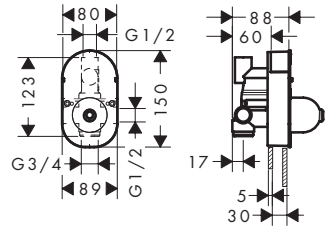

Certificates/declarations

EPD

Code no.
31741180

Optional parts:	Code no.
Extension for basic set for single lever bath mixer for concealed installation	32498000

Measurements within scale drawings are in mm.
Technical specifications and units of measure are subject to change.

Basic set for single lever bath mixer for concealed installation

Features

- connection dimension: DN15
- flow rate at free through-flow: 20 l/min
- ceramic cartridge
- maximum flow rate at 3 bar: 20 l/min



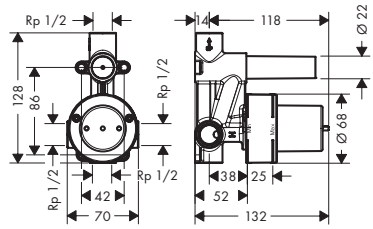

	Code no.
	71465187

Optional parts:	Finish	Code no.
 Extension set 25 mm	Chrome	71962007

Basic set for single lever shower mixer for concealed installation

Features

- connection dimension: DN15
- ceramic cartridge
- temperature limitation adjustable
- minimum mounting depth: 55 mm
- maximum mounting depth: 83 mm



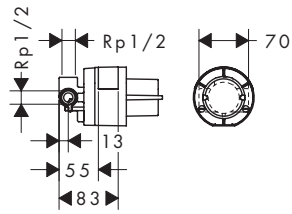

Certificates/declarations

EPD

	Code no.
	13620180

Optional parts:	Code no.
 Extension set for basic set for single lever shower mixer for concealed installation	32698000

Measurements within scale drawings are in mm.
Technical specifications and units of measure are subject to change.

Basic set for single lever shower mixer for concealed installation

Features

· connection dimension: DN15
· maximum flow rate at 3 bar: 10 l/min



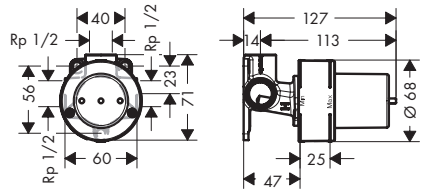

	Code no.
	71651187

Optional parts:	Finish	Code no.
 Extension set 25 mm	Chrome	71963007

Basic set for Trio shut-off/ diverter valve for concealed installation

Features

· 2 outlets can be used simultaneously



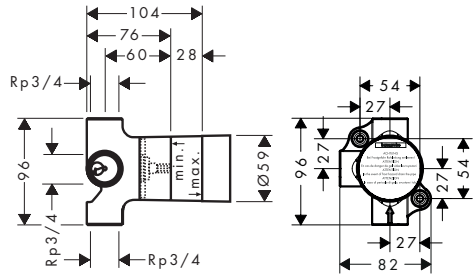

Certificates/declarations

	Code no.
	15981180

Optional parts:	Code no.
 Extension set 2.5 cm	96370000

Measurements within scale drawings are in mm.
Technical specifications and units of measure are subject to change.

Basic set for Quattro four-way diverter valve for concealed installation

Features

- requires volume control
- 3 functions
- simultaneous utilization of 2 functions
- suitable for all Quattro finish sets
- connection dimension: DN20
- maximum flow rate at 3 bar: 65 l/min



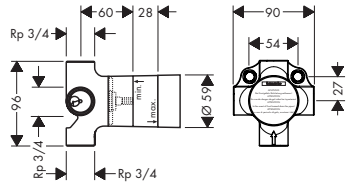

Certificates/declarations

	Code no.
	15930180

Optional parts:	Code no.
Extension set 2.5 cm	96370000

Extension set 2.5 cm

Features

- extension length: 25 mm



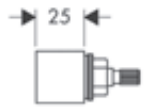

	Code no.
	96370000

Extension set 25 mm



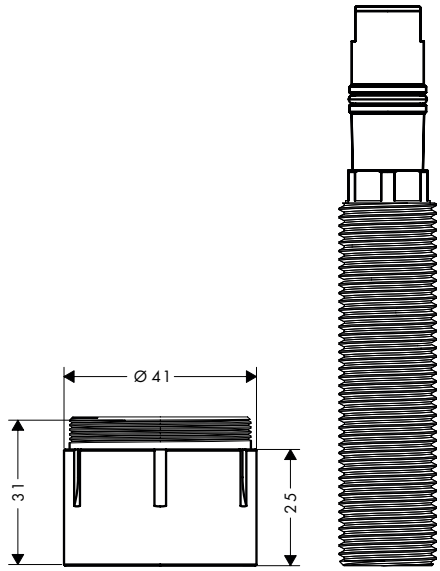

Finish	Code no.
Chrome	71556007

Measurements within scale drawings are in mm.
Technical specifications and units of measure are subject to change.

Extension set 25 mm

Features

· extension length: 25 mm



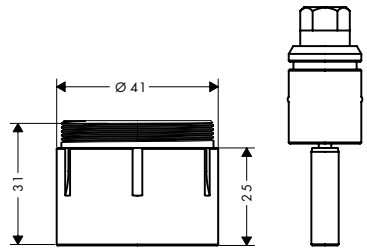

Finish	Code no.
Chrome	71962007

Extension set 25 mm

Features

· extension length: 25 mm



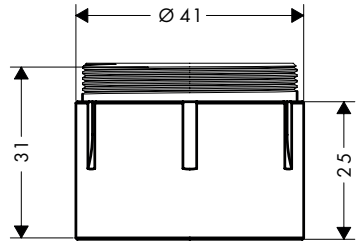

Finish	Code no.
Chrome	71963007

Basic set 52 l/min for shut-off valve for concealed installation spindle

Features

· connection type: DN15
· suitable for all shut-off valves finish sets
· maximum flow rate at 3 bar: 52 l/min
· connection dimension: DN15



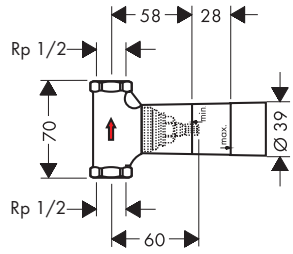

Certificates/declarations

Code no.
15973180

Optional parts:	Code no.
Extension set 2.5 cm	96370000

Measurements within scale drawings are in mm.
Technical specifications and units of measure are subject to change.

Basic set 40 l/min for shut-off valve for concealed installation ceramic

Features

- connection type: DN15
- suitable for all shut-off valves finish sets
- maximum flow rate at 3 bar: 40 l/min
- connection dimension: DN15



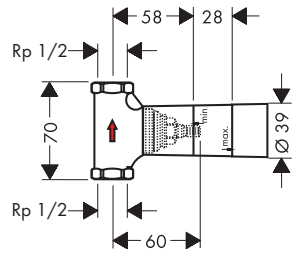

Certificates/declarations

	Code no.
	15974180

Optional parts:	Code no.
Extension set 2.5 cm	96370000

Basic set 130 l/min for shut-off valve for concealed installation spindle

Features

- suitable for all shut-off valves finish sets
- maximum flow rate at 3 bar: 130 l/min
- connection dimension: DN20



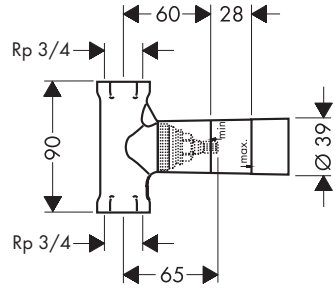

Certificates/declarations

	Code no.
	15970180

Optional parts:	Code no.
Extension set 2.5 cm	96370000

RainSelect Base sets for shower thermostats for concealed installation

Features of all variants

- connection thread Rp ¾
- connection dimension: DN15/DN20
- horizontal installation
- sound-decoupled installation
- minimum mounting depth: 87 mm
- maximum mounting depth: 122 mm

2 functions



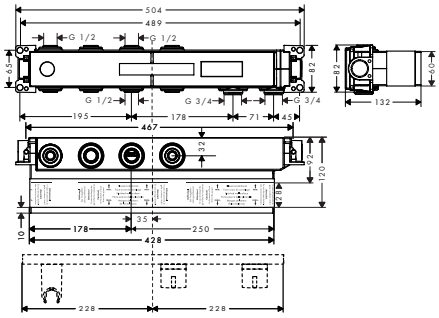

3 functions



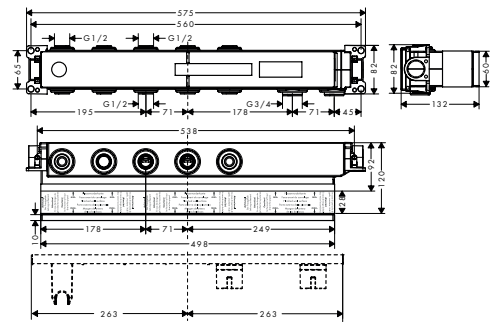

Certificates/declarations

EPD

Overview variants

Number of functions	Code no.
2 functions	15310180
3 functions	15311180

RainSelect Base sets for shower thermostats for concealed installation

Features of all variants

- connection thread Rp ¾
- connection dimension: DN15/DN20
- horizontal installation
- sound-decoupled installation
- minimum mounting depth: 87 mm
- maximum mounting depth: 122 mm

4 functions



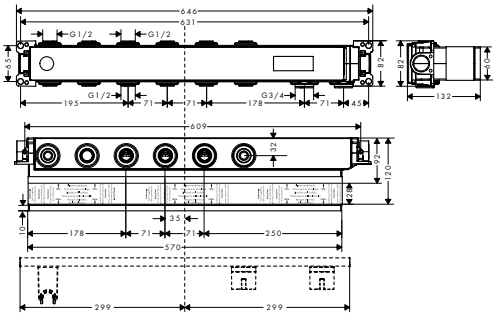

5 functions



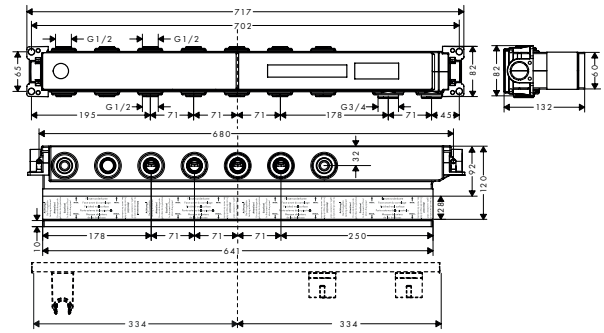

Certificates/declarations

EPD

Overview variants

Number of functions	Code no.
4 functions	15312180
5 functions	15313180

Measurements within scale drawings are in mm.
Technical specifications and units of measure are subject to change.

Rainfinity Basic set for showerpipe 360 1jet for concealed installation

Features

- suitable for Showerpipe 360 1jet for concealed installation
- connection dimension: G ½
- no additional maintenance opening required
- sound-decoupled installation
- The position of the connections is given, thus easy installation
- easy mounting



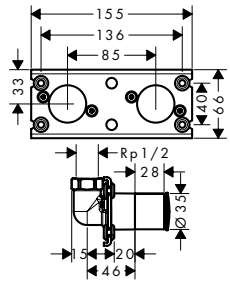

Code no.
26840180

Rainmaker Select Basic set for overhead shower with ceiling connector

Features

- includes polystyrene sheathing as a placeholder during installation



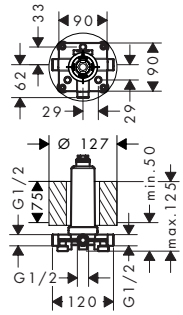

Certificates/declarations

Code no.
24010180

Raindance Rainmaker Basic set for overhead shower 680/460 3jet

Features

- connection dimension: G ½



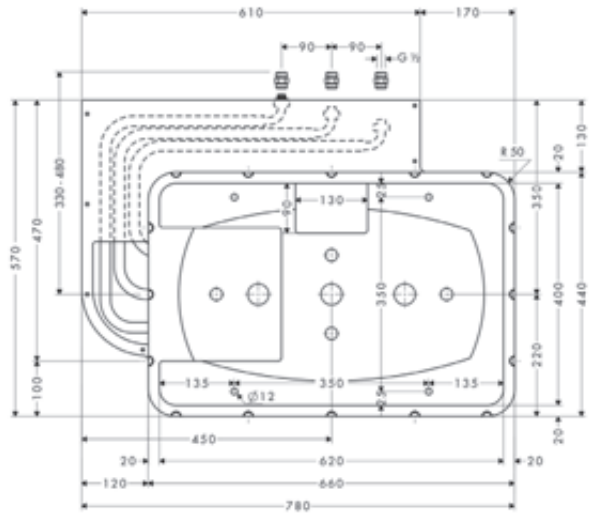

Certificates/declarations

Code no.
28414180

Measurements within scale drawings are in mm.
Technical specifications and units of measure are subject to change.

Raindance E Basic set for overhead shower 400/400 1jet



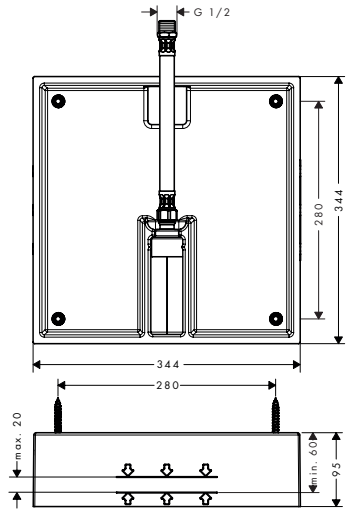

Certificates/declarations

EPD

	Code no.
	26254180

Optional parts:		Finish	Code no.
	Raindance E Overhead shower 400/400 1jet	Chrome	26252000
	Raindance E Overhead shower 400/400 1jet EcoSmart 9 l/min	Chrome	26253000

Raindance Basic set for overhead shower 260/260 1jet

Features

- minimum mounting depth: 60 mm
- maximum mounting depth: 80 mm
- connection dimension: G ½



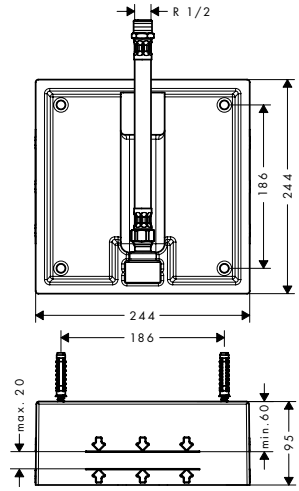

Certificates/declarations

EPD

	Code no.
	26471180

Optional parts:		Finish	Code no.
	Raindance Overhead shower 260/260 1jet	Chrome	26472000
	Raindance Overhead shower 260/260 1jet EcoSmart 9 l/min	Chrome	26481000

Measurements within scale drawings are in mm.
Technical specifications and units of measure are subject to change.

Mixers

	Metropol				
					
Finish					
ComfortZone	100 - 260	100 - 260	230	110/160	–
Projection (mm)	135 - 204	127 - 204	165	132/152	165/225
CoolStart	–	■	–	–	–
EcoSmart+	–	–	–	–	–
EcoSmart	■	■	■	■	■
QuickClean	■	■	–	■	■
AirPower	■	■	■	■	■
Remove&Clean	–	–	–	–	–
Pillar tap	–	■	–	–	–
For open water heaters	–	–	–	–	–
Swivel spout	–	–	■	–	–
Wall installation	–	–	–	–	■
Electronic basin mixer	–	–	–	–	–
from page	380	381	383	384	384

	Finoris			
				
Finish				
ComfortZone	100 - 260	230	110/160	–
Projection (mm)	126 - 208	178/191	169	168/228
CoolStart	■	–	–	–
EcoSmart+	–	–	–	–
EcoSmart	■	■	■	■
QuickClean	–	■	–	–
AirPower	–	–	–	–
Remove&Clean	–	–	–	–
Pillar tap	■	–	–	–
For open water heaters	–	–	–	–
Swivel spout	–	■	–	–
Wall installation	–	–	–	■
Electronic basin mixer	–	–	–	–
from page	408	409	410	411

■ available depending on the model
– not available

	Metropol	Metris		
				
Finish	◐	◐	◐	◐
ComfortZone	–	100 - 260	230	–
Projection (mm)	235	89 - 197	155	165/225
CoolStart	–	■	–	–
EcoSmart+	–	–	–	–
EcoSmart	■	■	■	■
QuickClean	■	■	■	■
AirPower	■	■	■	■
Remove&Clean	–	–	–	–
Pillar tap	–	–	–	–
For open water heaters	–	■	–	–
Swivel spout	–	–	■	–
Wall installation	–	–	–	■
Electronic basin mixer	–	–	–	–
from page	385	396	398	398

Mixers

	Tecturis S				
					
Finish					
ComfortZone	110 - 240	150	150	80/110	–
Projection (mm)	130 - 167	139	139	108/116	165/225
CoolStart	■	■	–	■	–
EcoSmart+	■	■	■	■	■
EcoSmart	■	–	–	■	–
QuickClean	–	–	–	–	–
AirPower	■	■	■	■	■
Remove&Clean	–	–	–	–	–
Pillar tap	–	–	–	■	–
For open water heaters	–	–	–	–	–
Swivel spout	■	–	–	–	–
Wall installation	–	–	–	–	■
Electronic basin mixer	–	–	–	–	–
from page	418	420	421	421	423

	Vivenis			
				
Finish				
ComfortZone	80 - 250	210	90	–
Projection (mm)	133 - 191	139	150	192
CoolStart	■	–	–	–
EcoSmart+	–	–	–	–
EcoSmart	■	■	■	■
QuickClean	–	–	–	–
AirPower	■	■	■	■
Remove&Clean	–	–	–	–
Pillar tap	■	–	–	–
For open water heaters	–	–	–	–
Swivel spout	–	■	–	–
Wall installation	–	–	–	■
Electronic basin mixer	–	–	–	–
from page	440	441	442	443

■ available depending on the model
– not available

	Tecturis E				
					
Finish					
ComfortZone	110 - 240	150	150	80/110	–
Projection (mm)	155 - 197	158	158	122/144	225
CoolStart	■	■	–	■	–
EcoSmart+	■	■	■	■	■
EcoSmart	■	–	–	■	–
QuickClean	–	–	–	–	–
AirPower	■	■	■	■	■
Remove&Clean	–	–	–	–	–
Pillar tap	–	–	–	■	–
For open water heaters	–	–	–	–	–
Swivel spout	■	–	–	–	–
Wall installation	–	–	–	–	■
Electronic basin mixer	–	–	–	–	–
from page	428	430	430	432	433

	Talis Select S	Talis S			
					
Finish					
ComfortZone	80 - 190	80 - 190	140/250	210	–
Projection (mm)	93 - 131	93 - 131	152/201	162	165/225
CoolStart	–	■	–	–	–
EcoSmart+	–	–	–	–	–
EcoSmart	■	■	■	■	■
QuickClean	■	■	■	■	■
AirPower	■	■	■	■	■
Remove&Clean	–	–	–	–	–
Pillar tap	–	■	–	–	–
For open water heaters	–	–	–	–	–
Swivel spout	–	–	–	■	–
Wall installation	–	–	–	–	■
Electronic basin mixer	–	–	–	–	–
from page	450	451	452	453	454

Mixers

	Talis S		Talis Select E	Talis E	
					
Finish					
ComfortZone	40/70	200	110/240	110	80 - 240
Projection (mm)	83/100	145	112/183	111	96 - 183
CoolStart	–	–	–	–	■
EcoSmart+	–	–	–	–	–
EcoSmart	■	■	■	■	■
QuickClean	■	■	■	–	■
AirPower	■	■	■	■	■
Remove&Clean	–	–	–	–	–
Pillar tap	■	–	–	■	■
For open water heaters	■	–	–	–	■
Swivel spout	–	■	–	–	–
Wall installation	–	–	–	–	–
Electronic basin mixer	–	–	–	–	–
from page	461	464	466	466	467

■ available depending on the model
– not available

	Talis E		
			
Finish			
ComfortZone	150	150	–
Projection (mm)	141	112	165/225
CoolStart	–	–	–
EcoSmart+	–	–	–
EcoSmart	■	■	■
QuickClean	■	■	■
AirPower	■	■	■
Remove&Clean	–	–	–
Pillar tap	–	–	–
For open water heaters	–	–	–
Swivel spout	–	–	–
Wall installation	–	–	■
Electronic basin mixer	–	–	–
from page	469	470	471

Mixers

	Focus				
					
Finish	◐	◐	◐	◐	◐
ComfortZone	70 - 230	70/100	240	100	–
Projection (mm)	101 - 185	101/119	160	120	180
CoolStart	■	–	–	–	–
EcoSmart+	–	–	–	–	–
EcoSmart	■	■	■	■	■
QuickClean	■	–	–	■	■
AirPower	■	–	■	■	■
Remove&Clean	–	–	–	–	–
Pillar tap	■	–	–	–	–
For open water heaters	■	–	–	–	–
Swivel spout	–	–	■	–	–
Wall installation	–	–	–	–	–
Electronic basin mixer	–	–	–	–	–
from page	480	482	483	484	484

	Rebris S			
				
Finish	◐●	◐●	◐	◐●
ComfortZone	80 - 240	210	110	–
Projection (mm)	121 - 169	154	134	200
CoolStart	■	–	–	–
EcoSmart+	■	–	–	–
EcoSmart	■	■	■	■
QuickClean	–	–	–	–
AirPower	■	■	■	■
Remove&Clean	■	–	–	–
Pillar tap	■	–	–	–
For open water heaters	–	–	–	–
Swivel spout	–	■	–	–
Wall installation	–	–	–	■
Electronic basin mixer	–	–	–	–
from page	496	497	498	499

■ available depending on the model
– not available

	Focus
	
Finish	◐
ComfortZone	–
Projection (mm)	180
CoolStart	–
EcoSmart+	–
EcoSmart	■
QuickClean	–
AirPower	–
Remove&Clean	–
Pillar tap	–
For open water heaters	–
Swivel spout	–
Wall installation	–
Electronic basin mixer	–
from page	485

	Rebris E		
			
Finish	◐●	◐●	◐●
ComfortZone	80 - 240	210	–
Projection (mm)	121 - 169	154	200
CoolStart	■	–	–
EcoSmart+	■	–	–
EcoSmart	■	■	■
QuickClean	–	–	–
AirPower	■	■	■
Remove&Clean	■	–	–
Pillar tap	■	–	–
For open water heaters	–	–	–
Swivel spout	–	■	–
Wall installation	–	–	■
Electronic basin mixer	–	–	–
from page	504	505	506

Mixers

	Logis				
					
Finish	◐	◐	◐	◐	◐
ComfortZone	70 - 190	110/240	210	150	80
Projection (mm)	107 - 166	121/172	154	145	84
CoolStart	■	■	–	–	–
EcoSmart+	–	–	–	–	–
EcoSmart	■	■	■	■	■
QuickClean	–	–	–	–	–
AirPower	■	■	■	■	■
Remove&Clean	–	■	–	–	–
Pillar tap	–	–	–	–	■
For open water heaters	–	–	–	–	–
Swivel spout	–	–	■	■	–
Wall installation	–	–	–	–	–
Electronic basin mixer	–	–	–	–	–
from page	512	514	515	515	516

	Vernis Blend			
				
Finish	◐●	◐	◐●	◐●
ComfortZone	70 - 190	200	150	–
Projection (mm)	89 - 169	166	166	204
CoolStart	–	–	–	–
EcoSmart+	–	–	–	–
EcoSmart	■	■	■	■
QuickClean	–	–	–	–
AirPower	■	–	–	■
Remove&Clean	–	–	–	–
Pillar tap	–	–	–	–
For open water heaters	–	–	–	–
Swivel spout	–	■	–	–
Wall installation	–	–	–	■
Electronic basin mixer	–	–	–	–
from page	530	532	532	533

■ available depending on the model
– not available

	Logis			
				
Finish	◐	◐	◐	◐
ComfortZone	150	–	–	–
Projection (mm)	109	195	206	194
CoolStart	–	–	–	–
EcoSmart+	–	–	–	–
EcoSmart	■	■	■	■
QuickClean	–	–	–	■
AirPower	■	■	■	■
Remove&Clean	–	–	–	–
Pillar tap	–	–	–	–
For open water heaters	–	–	–	–
Swivel spout	–	–	–	–
Wall installation	–	–	–	–
Electronic basin mixer	–	–	–	–
from page	516	517	517	518

	Vernis Shape			
				
Finish	◐●	◐	◐●	◐●
ComfortZone	70 - 190	200	150	–
Projection (mm)	89 - 181	166	166	204
CoolStart	■	–	–	■
EcoSmart+	■	–	–	■
EcoSmart	■	■	■	■
QuickClean	–	–	–	–
AirPower	■	–	–	■
Remove&Clean	■	–	–	■
Pillar tap	–	–	–	–
For open water heaters	–	–	–	–
Swivel spout	–	■	–	–
Wall installation	–	–	–	■
Electronic basin mixer	■	–	–	■
from page	539	540	540	541

Mixers

	Metris S	Focus	Vernis Blend	
				
Finish	◐	◐	◐	◐
ComfortZone	150	130	100	100
Projection (mm)	128	127	112	112
CoolStart	–	–	–	–
EcoSmart+	–	–	–	–
EcoSmart	■	■	–	–
QuickClean	–	–	–	–
AirPower	■	■	■	■
Remove&Clean	–	–	–	–
Pillar tap	–	–	–	■
For open water heaters	–	–	–	–
Swivel spout	–	–	–	–
Wall installation	–	–	–	–
Electronic basin mixer	■	■	■	■
from page	548	548	549	549

■ available depending on the model
– not available

Sustainability



Energy saving tap that supports conserving precious resources, reducing CO2 emissions and cutting costs.



The special Eco cartridge indicates with a slight resistance when 50% of the flow rate has been reached.



Fitting that saves up to 20% more water compared to our converntionel models and thus also energy.



Tap that only uses 5 l/min and thus reduces water and energy costs. Eco-friendly and wallet-friendly.



Actively regulate water consumption - the amount of water can be adjusted using the control dial.

Technologies



Mixes air into the water. For a soft, less splashing water jet and full, light drops.



Comfort at all levels – the tap fits in perfectly with the chosen wash basin settings.



Low-pressure technology enables use at pressures as low as 0.2 bar. Suitable for boilers/heat exchangers.

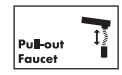

Significantly more space to move and maximum flexibility around the wash basin, for example when washing hair.



Limescale deposits and dirt can be simply rubbed off using a finger, creating less of a need to clean.



Remove and clean the aerator in no time at all with the aid of a coin - no tools required.



A touch of a button is all it takes for the water in the bathtub to come out of the bath spout or shower.



One press of a button is all it takes to regulate the flow of water at the washbasin.



Contactless tap that responds to infrared rays. Water only flows when the tap can sense warmth from the hands.

Spray types



Powerful, stimulating water spray that washes away tiredness and leaves people feeling fit.



Targeted spray that gently relaxes for soothing wellness moments.



Focused and extremly gentle spray soothing wellness moments and hydrotherapeutic showering.



Invigorating and energizing showering indulgence with full shower rain designed for everyday shower pleasure.



Full shower rain with droplets enriched with air for soft yet efficient and indulgent showering.



Powerful stream that bathes the entire body and feels like a waterfall for wonderful relaxation.



Concentrated massage spray that helps to nicely and gently wash away everyday tensions and stress.

Finishes



Brushed Black Chrome

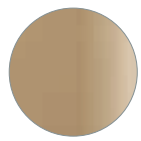

Brushed Bronze

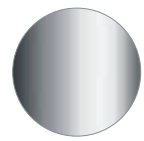

Chrome



Matt Black

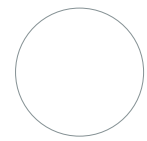

Matt White

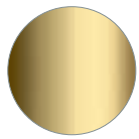

Polished Gold Optic



Metropol

Metropol Basin mixers Select

Features of all variants

- consists of: Basin mixer, waste set
- handle variant: Select
- spray type: normal spray
- maximum flow rate at 3 bar: 5 l/min
- Select cartridge with temperature control
- temperature limitation adjustable
- suitable for continuous flow water heaters
- push-open waste set G 1¼
- material waste set: metal
- connection type: G ⅜ connections
- connection dimension: DN15
- EU taxonomy: max. 6 l/min - Substantial Contribution (SC) possible

100



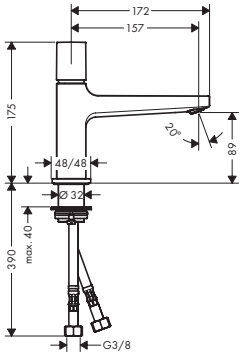

110



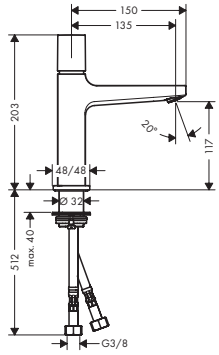

260



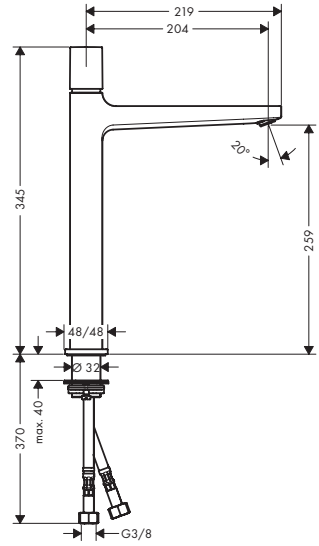

Sustainability

EcoSmart

Technologies

Select · AirPower · Comfort Zone · Quick Clean

Certificates/declarations

EPD

Overview variants

ComfortZone	Projection (mm)	Spout height (mm)	For wash bowls	Finish	Code no.
100	157	89	–	Chrome	32570000
110	135	117	–	Chrome	32571000
260	204	259	■	Chrome	32572000

Measurements within scale drawings are in mm.
Technical specifications and units of measure are subject to change.

Metropol Single lever basin mixer 100 with lever handle for handrinse basins for cold water

Features

- ComfortZone 100
- projection: 127 mm
- spout height: 89 mm
- handle variant: lever handle
- spray type: normal spray
- maximum flow rate at 3 bar: 5 l/min
- ceramic cartridge
- for cold water connection
- connection type: G ⅜ connection hose
- connection dimension: DN15
- EU taxonomy: max. 6 l/min - Substantial Contribution (SC) possible



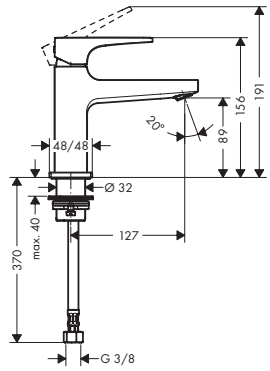

Sustainability

EcoSmart

Technologies

AirPower | Comfort Zone | Quick Clean

Finish	Code no.
Chrome	32501000

Metropol Single lever basin mixers for hand washbasins

Features of all variants

- consists of: single lever basin mixer, waste set
- ComfortZone 100
- projection: 127 mm
- spout height: 89 mm
- spray type: normal spray
- maximum flow rate at 3 bar: 5 l/min
- ceramic cartridge
- temperature limitation adjustable
- suitable for continuous flow water heaters
- push-open waste set G 1¼
- material waste set: metal
- connection type: G ⅜ connections
- connection dimension: DN15



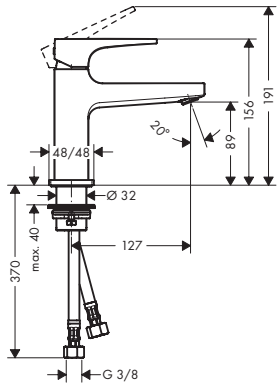



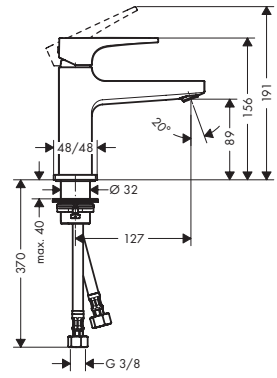

Sustainability

EcoSmart

Technologies

AirPower | Comfort Zone | Quick Clean

Certificates/declarations

EPD

Overview variants

ComfortZone	Projection (mm)	Spout height (mm)	Handle version	Finish	Code no.
100	127	89	lever	Chrome	32500000
				Brushed Bronze	32500140
				Brushed Black Chrome	32500340
				Matt Black	32500670
				Matt White	32500700
100	127	89	loop	Chrome	74500000

Measurements within scale drawings are in mm.
Technical specifications and units of measure are subject to change.

Metropol Single lever basin mixers

Features of all variants

- consists of: single lever basin mixer, waste set
- spray type: normal spray
- maximum flow rate at 3 bar: 5 l/min
- ceramic cartridge
- temperature limitation adjustable
- suitable for continuous flow water heaters
- material waste set: metal
- connection type: G ⅜ connections
- connection dimension: DN15

100



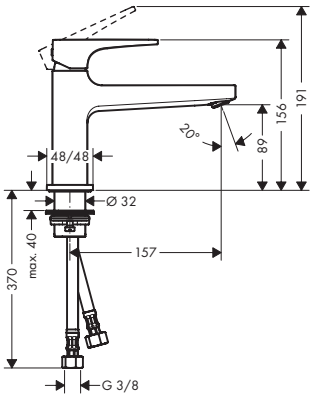

110



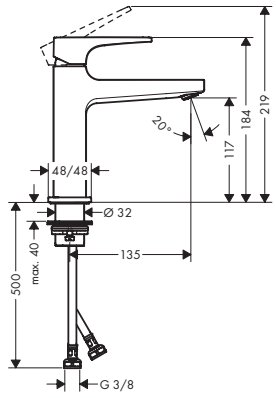

260



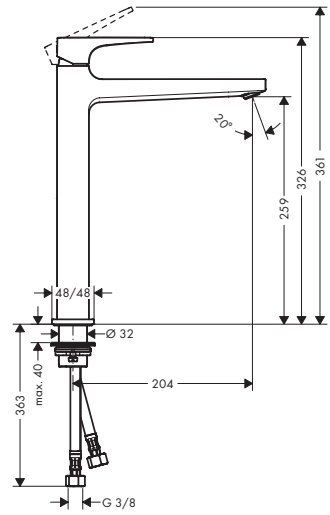

Sustainability

EcoSmart, CoolStart

Technologies

AirPower, Comfort Zone, Quick Clean

Certificates/declarations

EPD

Overview variants

ComfortZone	Projection (mm)	Spout height (mm)	Waste set	Handle version	CoolStart	For wash bowls	Finish	Code no.
100	157	89	push-open	lever	■	–	Chrome	32503000
100	157	89	push-open	lever	–	–	Chrome	32502000
100	157	89	push-open	loop	–	–	Chrome	74502000
110	135	117	push-open	lever	■	–	Chrome	32508000
110	135	117	push-open	lever	–	–	Chrome	32507000
							Brushed Bronze	32507140
							Brushed Black Chrome	32507340
							Matt Black	32507670
							Matt White	32507700
							Polished Gold Optic	32507990
110	135	117	pop-up	lever	–	–	Chrome	32506000
110	135	117	push-open	loop	–	–	Chrome	74507000
110	135	117	pop-up	loop	–	–	Chrome	74506000

Measurements within scale drawings are in mm.
Technical specifications and units of measure are subject to change.

Metropol Single lever basin mixers

Overview variants

ComfortZone	Projection (mm)	Spout height (mm)	Waste set	Handle version	CoolStart	For wash bowls	Finish	Code no.
260	204	259	push-open	lever	–	■	Chrome	32512000
							Brushed Bronze	32512140
							Brushed Black Chrome	32512340
							Matt Black	32512670
							Matt White	32512700
							Polished Gold Optic	32512990
260	204	259	push-open	loop	–	■	Chrome	74512000

Metropol Single lever basin mixers with swivel spout

Features of all variants

- consists of: single lever basin mixer, waste set
- ComfortZone 230
- projection: 165 mm
- spout height: 226 mm
- swivel range 120°
- spray type: normal spray
- maximum flow rate at 3 bar: 5 l/min
- ceramic cartridge
- temperature limitation adjustable
- suitable for continuous flow water heaters
- push-open waste set G 1¼
- material waste set: metal
- connection type: G ⅜ connections
- connection dimension: DN15
- handle position on the side: bottom-side at the base body (not suitable for wash bowls)



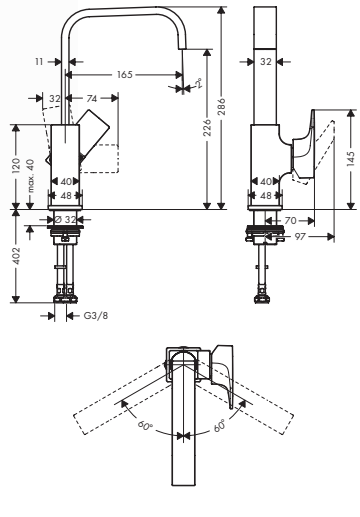

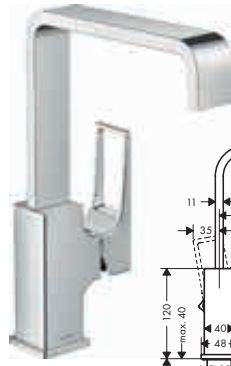

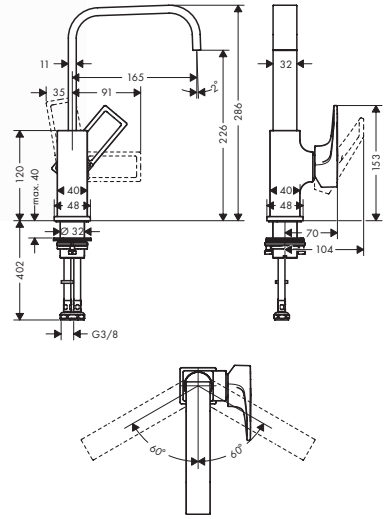

Sustainability

EcoSmart

Technologies

AirPower · Comfort Zone

Certificates/declarations

EPD

Overview variants

ComfortZone	Projection (mm)	Spout height (mm)	Handle version	Finish	Code no.
230	165	226	lever	Chrome	32511000
				Brushed Bronze	32511140
				Brushed Black Chrome	32511340
				Matt Black	32511670
				Matt White	32511700
				Polished Gold Optic	32511990
230	165	226	loop	Chrome	74511000

Measurements within scale drawings are in mm.
Technical specifications and units of measure are subject to change.

Metropol 3-hole basin mixers

Features of all variants

- consists of: 3-hole basin mixer, waste set
- maximum flow rate at 3 bar: 5 l/min
- ceramic valves hot/cold 90°
- suitable for continuous flow water heaters
- push-open waste set G 1¼
- material waste set: metal
- connection type: G ⅜ connections
- connection dimension: DN15

110



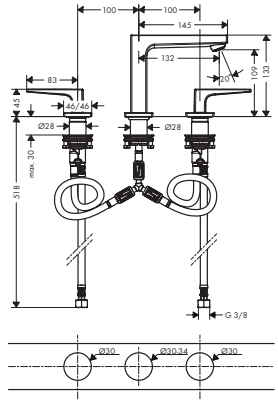

160



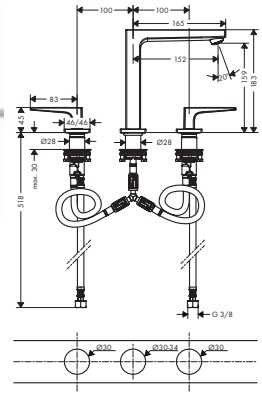

Sustainability

EcoSmart

Technologies

AirPower | Comfort Zone | Quick Clean

Certificates/declarations

EPD

Overview variants

ComfortZone	Projection (mm)	Spout height (mm)	Handle version	Finish	Code no.
110	132	109	lever	Chrome	32514000
160	152	159	lever	Chrome	32515000
				Brushed Bronze	32515140
				Brushed Black Chrome	32515340
				Matt Black	32515670
				Matt White	32515700
				Polished Gold Optic	32515990
160	152	159	loop	Chrome	74515000

Metropol Single lever basin mixers for concealed installation wall-mounted

Features of all variants

- consists of: single lever basin mixer for concealed installation wall-mounted, waste set
- handle variant: lever handle
- spray type: normal spray
- maximum flow rate at 3 bar: 5 l/min
- ceramic cartridge
- temperature limitation adjustable
- suitable for continuous flow water heaters
- non-closing waste set
- material waste set: metal
- connection type: basic set
- connection dimension: DN15
- handle can be positioned on the right or left, depending on the basic set installation

165



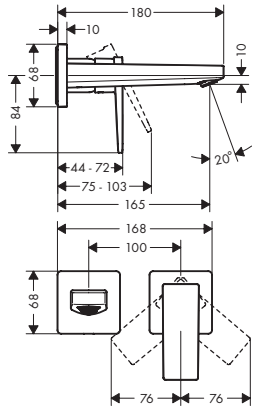

225



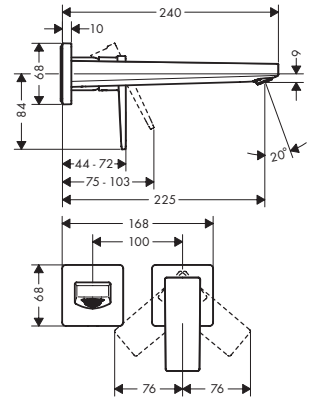

Sustainability

EcoSmart

Technologies

AirPower | Quick Clean

Certificates/declarations

EPD

Overview variants

Projection (mm)	Handle version	Finish	Code no.
165	lever	Chrome	32525000
165	loop	Chrome	74525000

Measurements within scale drawings are in mm.
Technical specifications and units of measure are subject to change.

Metropol Single lever basin mixers for concealed installation wall-mounted

Overview variants

Projection (mm)	Handle version	Finish	Code no.
225	lever	Chrome	32526000
		Brushed Bronze	32526140
		Brushed Black Chrome	32526340
		Matt Black	32526670
		Matt White	32526700
		Polished Gold Optic	32526990
225	loop	Chrome	74526000

Required parts:	Code no.
Basic set for single lever basin mixer for concealed installation wall-mounted	13622180

Metropol Single lever basin mixers floor-standing

Features of all variants

- projection: 235 mm
- spray type: normal spray
- maximum flow rate at 3 bar: 5 l/min
- ceramic cartridge
- temperature limitation adjustable
- suitable for continuous flow water heaters
- connection type: basic set
- connection dimension: DN15
- EU taxonomy: max. 6 l/min - Substantial Contribution (SC) possible

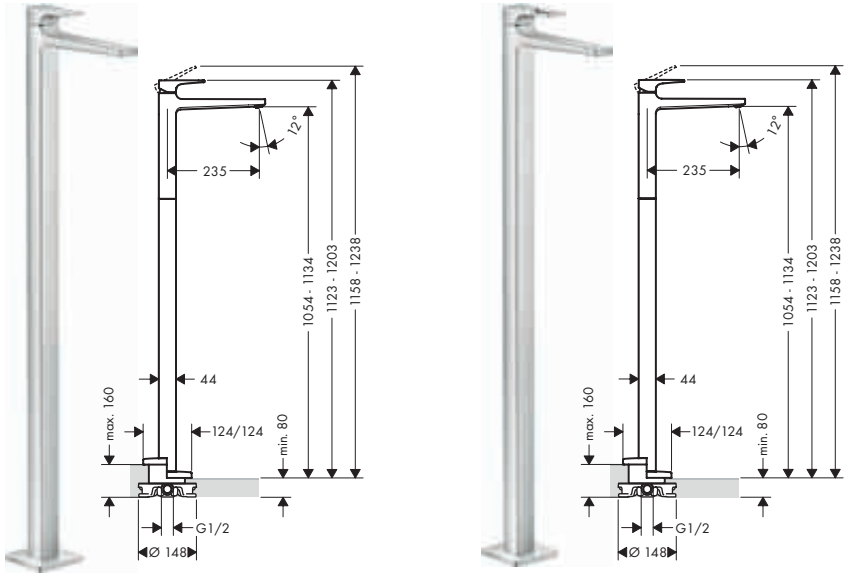

Sustainability

EcoSmart

Technologies

AirPower Quick Clean

Overview variants

Handle version	Finish	Code no.
lever	Chrome	32530000
loop	Chrome	74530000

Required parts:	Code no.
Basic set for mixers floor-standing	10452180

Optional parts:	Code no.
Sealing foil for basic set bath mixer floor-standing	96441000

Measurements within scale drawings are in mm.
Technical specifications and units of measure are subject to change.

Metropol Single lever bidet mixers

Features of all variants

- consists of: single lever bidet mixer, waste set
- projection: 129 mm
- spout height: 100 mm
- ball-pivot joint
- spray type: laminar spray
- maximum flow rate at 3 bar: 7,5 l/min
- ceramic cartridge
- temperature limitation adjustable
- suitable for continous flow water heaters
- material waste set: metal
- connection type: G ⅜ connections
- connection dimension: DN15



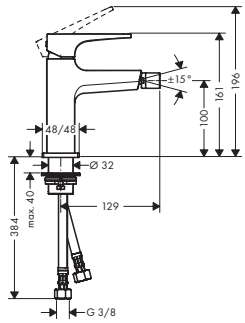



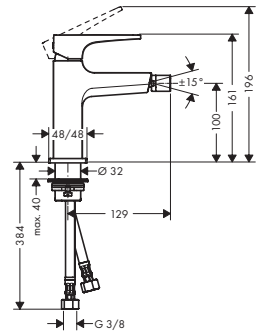

Overview variants

Handle version	Finish	Code no.
lever	Brushed Bronze	32520140
	Brushed Black Chrome	32520340
	Matt Black	32520670
	Matt White	32520700
	Polished Gold Optic	32520990
loop	Chrome	74520000

Metropol Single lever basin mixers with bidette hand shower and shower hose 160 cm

Features of all variants

- consists of: single lever basin mixer, bidette hand shower, shower holder, shower hose, waste set
- ComfortZone 110
- projection: 135 mm
- spout height: 117 mm
- handle variant: lever handle
- maximum flow rate at 3 bar: 5 l/min
- ceramic cartridge
- temperature limitation adjustable
- suitable for continuous flow water heaters
- push-open waste set G 1¼
- material waste set: metal
- connection type: G ⅜ connections
- connection dimension: DN15
- EU taxonomy: max. 6 l/min - Substantial Contribution (SC) possible



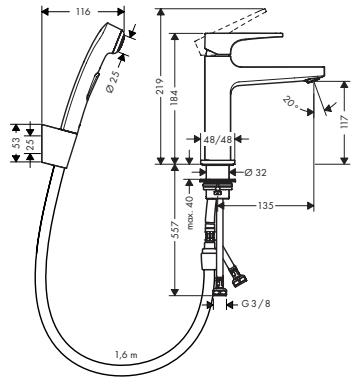



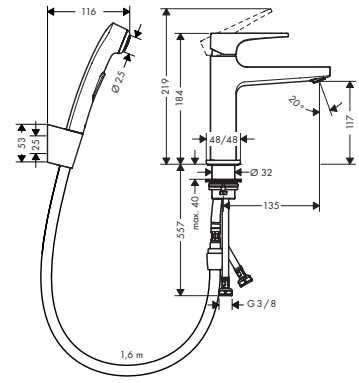

Sustainability

EcoSmart

Technologies

AirPower · Comfort Zone · Quick Clean

Certificates/declarations

EPD

Overview variants

ComfortZone	Projection (mm)	Spout height (mm)	Handle version	Finish	Code no.
110	135	117	lever	Chrome	32522000
110	135	117	loop	Chrome	74522000

Measurements within scale drawings are in mm.
Technical specifications and units of measure are subject to change.

Metropol Single lever bath mixers floor-standing

Features of all variants

- consists of: single lever bath mixer floor standing, baton hand shower, shower hose, shower holder
- 2 functions
- projection: 235 mm
- spray type mixer: normal spray
- spray type hand shower: Rain, MonoRain
- maximum flow rate at 3 bar: 20 l/min
- flow rate for bath spout at 3 bar: 20 l/min
- ceramic cartridge
- temperature limitation adjustable
- diverter with automatic resetting
- non-return valve
- connection dimension: DN15
- connection type: basic set
- deck mounted
- min. operating pressure: 1 bar
- max. operating pressure: 10 bar



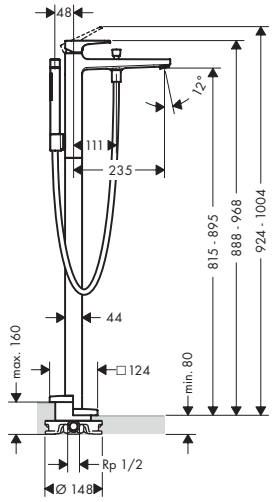



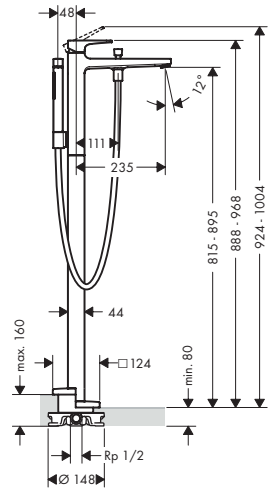

Technologies



Spray types



Overview variants

	Handle version	Finish	Code no.
	lever	Chrome	32532000
		Brushed Bronze	32532140
		Brushed Black Chrome	32532340
		Matt Black	32532670
		Matt White	32532700
		Polished Gold Optic	32532990
	loop	Chrome	74532000

Required parts:		Code no.
	Basic set for mixers floor-standing	10452180

Optional parts:		Code no.
	Sealing foil for basic set bath mixer floor-standing	96441000

Measurements within scale drawings are in mm.
Technical specifications and units of measure are subject to change.

Metropol Single lever bath mixers for exposed installation

Features of all variants

- 2 functions
- projection: 180 mm
- centre distance: 150 ± 12 mm
- spray type mixer: normal spray
- maximum flow rate at 3 bar: 22 l/min
- flow rate for bath spout at 3 bar: 22 l/min
- flow rate of hand shower at 3 bar: 16 l/min
- ceramic cartridge
- temperature limitation adjustable
- diverter with automatic resetting
- protected against backflow, according to DIN EN 1717
- suitable for continous flow water heaters
- connection dimension: DN15
- connection type: s-shaped connections
- wall-mounted
- min. operating pressure: 1 bar
- max. operating pressure: 10 bar



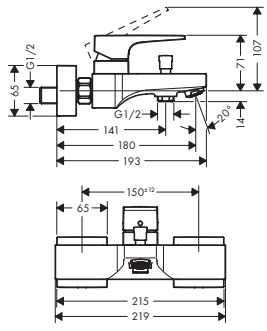



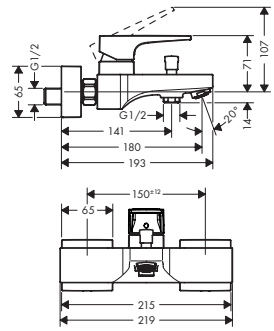

Technologies

AirPower | Quick Clean

Certificates/declarations

EPD

Overview variants

Handle version	Finish	Code no.
lever	Chrome	32540000
	Brushed Bronze	32540140
	Brushed Black Chrome	32540340
	Matt Black	32540670
	Matt White	32540700
	Polished Gold Optic	32540990
loop	Chrome	74540000

Metropol Single lever bath mixers for concealed installation for iBox universal

Features of all variants

- 2 functions
- ceramic cartridge
- temperature limitation adjustable
- diverter with automatic resetting
- with silencer
- connection type: basic set
- wall-mounted
- min. operating pressure: 1 bar
- max. operating pressure: 10 bar



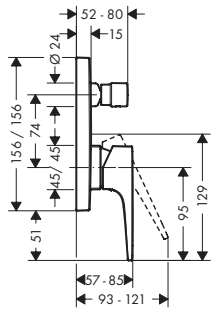



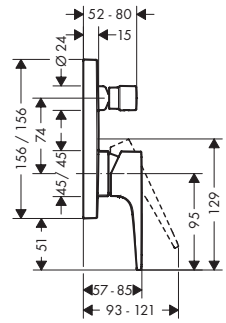

Certificates/declarations

EPD

Overview variants

Handle version	Security combination EN 1717	Max. flow rate at 3 bar (l/min)	Finish	Code no.
lever	–	29	Chrome	32545000
			Brushed Bronze	32545140
			Brushed Black Chrome	32545340
			Matt Black	32545670
			Matt White	32545700
			Polished Gold Optic	32545990

Measurements within scale drawings are in mm.
Technical specifications and units of measure are subject to change.

Metropol Single lever bath mixers for concealed installation for iBox universal

Overview variants

Handle version	Security combination EN 1717	Max. flow rate at 3 bar (l/min)	Finish	Code no.
lever	■	25	Chrome	32546000
			Brushed Bronze	32546140
			Brushed Black Chrome	32546340
			Matt Black	32546670
			Matt White	32546700
			Polished Gold Optic	32546990
loop	–	29	Chrome	74545000

Required parts (choose one):			Code no.
Option 1		iBox universal 2 Basic set	01500180
+		Adapter plate for iBox universal 2	13588000
Option 2		iBox universal Basic set	01800180

Metropol Bath spout floor-standing

Features

- 1 function
- connection type: basic set
- projection: 235 mm
- free-standing installation
- maximum flow rate at 3 bar: 21 l/min
- spray type: normal spray



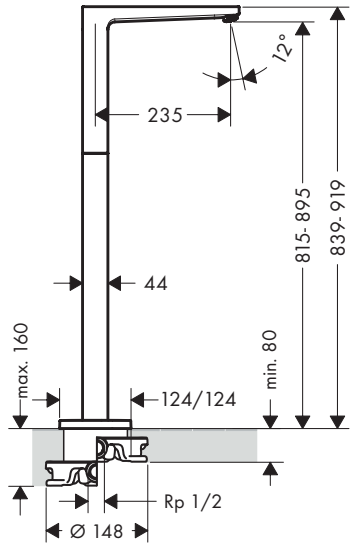

Technologies

AirPower · Quick Clean

Finish	Code no.
Chrome	32531000

Required parts:		Code no.
	Basic set for mixers floor-standing	10452180

Optional parts:		Code no.
	Sealing foil for basic set bath mixer floor-standing	96441000

Measurements within scale drawings are in mm.
Technical specifications and units of measure are subject to change.

Metropol Bath spout

Features

- 1 function
- connection type: G ¾
- projection: 167.5 mm
- wall-mounted
- maximum flow rate at 3 bar: 21 l/min
- spray type: normal spray



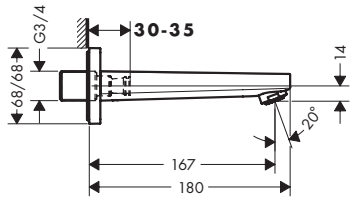

Technologies

AirPower, Quick Clean

Certificates/declarations

EPD

Finish	Code no.
Chrome	32542000

Optional parts:	Code no.
Socket for G1/2 connection	95626000

Metropol Bath spout

Features

- 1 function
- projection: 185 mm
- wall-mounted
- maximum flow rate at 3 bar: 21 l/min
- connection dimension: DN20
- spray type: RainFlow



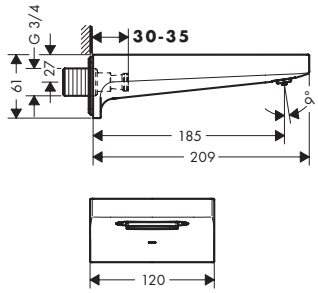

Technologies

AirPower

Spray types

RainFlow

Certificates/declarations

EPD

Finish	Code no.
Chrome	32543000
Brushed Bronze	32543140
Brushed Black Chrome	32543340
Matt Black	32543670
Matt White	32543700
Polished Gold Optic	32543990

Measurements within scale drawings are in mm.
Technical specifications and units of measure are subject to change.

Metropol 2-hole rim mounted single lever bath mixer with lever handle

Features

- 2 functions
- ceramic cartridge
- temperature limitation adjustable
- connection dimension: DN15
- connection type: basic set
- installation on bath rim
- min. operating pressure: 1 bar
- max. operating pressure: 10 bar
- no additional maintenance opening required



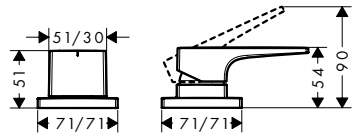

Finish	Code no.
Chrome	32548000

Required parts:	Code no.
Basic set for 2-hole rim mounted bath mixer	13159180

Metropol 3-hole rim mounted single lever bath mixers for Secuflex

Features of all variants

- consists of: 3-hole rim mounted single lever bath mixer, hand shower, shower holder
- 2 functions
- projection: 197 mm
- spray type mixer: normal spray
- spray type hand shower: Rain, RainAir, Whirl
- maximum pull-out length of hand shower: 1.10 m
- maximum flow rate at 3 bar: 19 l/min
- flow rate for bath spout at 3 bar: 19 l/min
- flow rate of hand shower at 3 bar: 15 l/min
- ceramic cartridge
- temperature limitation adjustable
- connection dimension: DN15
- connection type: basic set
- installation on bath rim
- min. operating pressure: 1 bar
- max. operating pressure: 10 bar
- no additional maintenance opening required





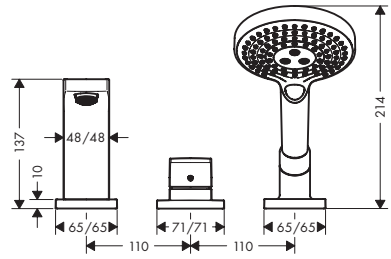

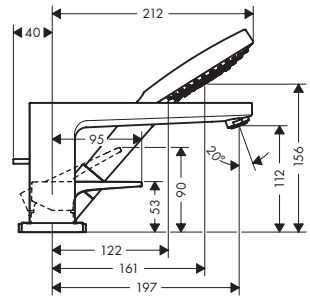

Technologies

AirPower · Quick Clean

Spray types

Rain Air · Rain · Whirl

Overview variants

Handle version	Finish	Code no.
lever	Chrome	32550000
loop	Chrome	74550000

Consisting of:	Included in	Code no.
Raindance Select S Hand shower 120 3jet	32550000 74550000	26530000

Required parts:	Code no.
Basic set for 3-hole rim mounted single lever bath mixer	13437180

Measurements within scale drawings are in mm.
Technical specifications and units of measure are subject to change.

Metropol 3-hole rim mounted single lever bath mixers

Features of all variants

- 2 functions
- projection: 197 mm
- spray type mixer: normal spray
- spray type hand shower: Rain, RainAir, Whirl
- maximum pull-out length of hand shower: 1.60 m
- maximum flow rate at 3 bar: 19 l/min
- flow rate of hand shower at 3 bar: 14 l/min
- temperature limitation adjustable
- connection dimension: DN15
- connection type: basic set
- installation on bath rim
- min. operating pressure: 1 bar
- max. operating pressure: 10 bar
- no additional maintenance opening required





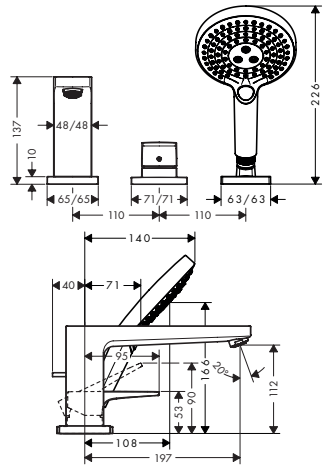

Technologies

AirPower · Quick Clean

Spray types

Rain Air · Rain · Whirl

Overview variants

	Handle version	Finish	Code no.
	lever	Chrome	32551000
	loop	Chrome	74551000

Consisting of:		Included in	Code no.
	Raindance Select S Hand shower 120 3jet	32551000 74551000	26530000

Required parts:		Code no.
	Basic set for 3-hole rim mounted single lever bath mixer	13439180

Metropol 4-hole rim mounted bath mixers for Secuflex

Features of all variants

- consists of: 4-hole rim mounted bath mixer, hand shower, shower holder
- 2 functions
- projection: 197 mm
- spray type mixer: normal spray
- spray type hand shower: Rain, RainAir, Whirl
- maximum pull-out length of hand shower: 1.10 m
- maximum flow rate at 3 bar: 24 l/min
- flow rate for bath spout at 3 bar: 24 l/min
- flow rate of hand shower at 3 bar: 15 l/min
- ceramic valves hot/cold 90°
- connection dimension: DN15
- connection type: basic set
- installation on bath rim
- min. operating pressure: 1 bar
- max. operating pressure: 10 bar
- no additional maintenance opening required





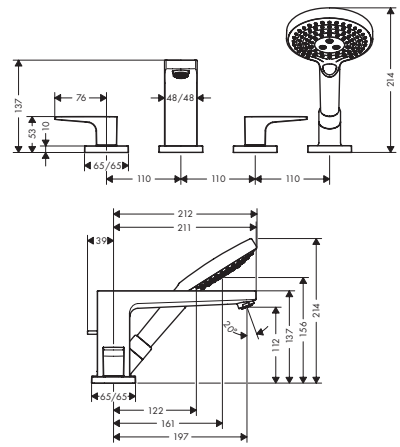

Technologies

AirPower · Quick Clean

Spray types

Rain Air · Rain · Whirl

Overview variants

	Handle version	Finish	Code no.
	lever	Chrome	32552000
	loop	Chrome	74552000

Measurements within scale drawings are in mm.
Technical specifications and units of measure are subject to change.

Metropol 4-hole rim mounted bath mixers for Secuflex

Consisting of:		Included in	Code no.
	Raindance Select S Hand shower 120 3jet	32552000 74552000	26530000
Required parts:			Code no.
	Basic set for 4-hole rim mounted bath mixer		13444180

Metropol 4-hole rim mounted bath mixer with lever handles

Features

- consists of: 4-hole rim mounted bath mixer, hand shower, shower holder
- 2 functions
- projection: 197 mm
- spray type mixer: normal spray
- spray type hand shower: Rain, RainAir, Whirl
- maximum pull-out length of hand shower: 1.60 m
- maximum flow rate at 3 bar: 23 l/min
- flow rate for bath spout at 3 bar: 23 l/min
- flow rate of hand shower at 3 bar: 15 l/min
- ceramic valves hot/cold 90°
- connection dimension: DN15
- connection type: basic set
- installation on bath rim
- min. operating pressure: 1 bar
- max. operating pressure: 10 bar
- no additional maintenance opening required



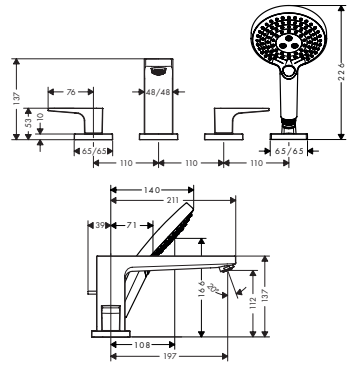

Technologies



Spray types



Finish	Code no.
Chrome	32553000

Consisting of:		Included in	Code no.
	Raindance Select S Hand shower 120 3jet	32553000	26530000
Required parts:			Code no.
	Basic set for 4-hole rim mounted bath mixer		13244180

Metropol Single lever shower mixers for exposed installation

Features of all variants

- 1 function
- centre distance: 150 ± 12 mm
- maximum flow rate at 3 bar: 16 l/min
- ceramic cartridge
- temperature limitation adjustable
- non-return valve
- with silencer
- hose connection DN15
- connection dimension: DN15
- min. operating pressure: 1 bar
- max. operating pressure: 10 bar
- connection type: s-shaped connections



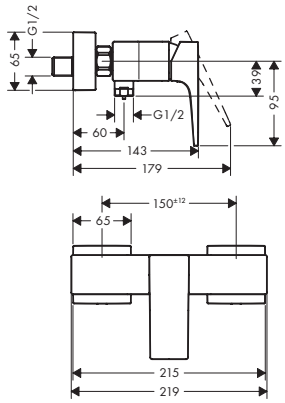



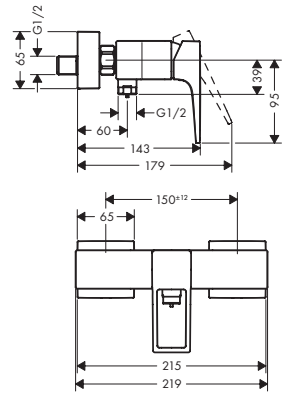

Certificates/declarations



For more information about this product, please see the next page.

Measurements within scale drawings are in mm.
Technical specifications and units of measure are subject to change.

Metropol Single lever shower mixers for exposed installation

Overview variants

Handle version	Finish	Code no.
lever	Chrome	32560000
	Brushed Bronze	32560140
	Brushed Black Chrome	32560340
	Matt Black	32560670
	Polished Gold Optic	32560990
loop	Chrome	74560000

Metropol Single lever shower mixers for concealed installation

Features of all variants

- 1 function
- maximum flow rate at 3 bar: 29,3 l/min
- ceramic cartridge
- temperature limitation adjustable
- with silencer
- min. operating pressure: 1 bar
- max. operating pressure: 10 bar
- connection type: basic set



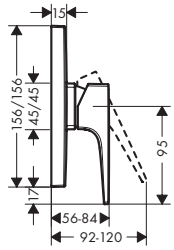



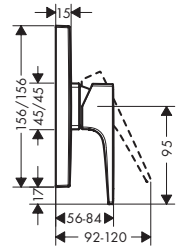

Certificates/declarations

EPD

Overview variants

Handle version	Finish	Code no.
lever	Chrome	32565000
	Brushed Bronze	32565140
	Brushed Black Chrome	32565340
	Matt Black	32565670
	Matt White	32565700
	Polished Gold Optic	32565990
loop	Chrome	74565000

Required parts (choose one):			Code no.
Option 1		iBox universal 2 Basic set	01500180
+		Adapter plate for iBox universal 2	13588000
Option 2		iBox universal Basic set	01800180

Measurements within scale drawings are in mm.
Technical specifications and units of measure are subject to change.



Metris

Metris Single lever basin mixers for hand washbasins

Features of all variants

- ComfortZone 100
- projection: 89 mm
- spout height: 93 mm
- handle variant: lever handle
- spray type: normal spray
- maximum flow rate at 3 bar: 5 l/min
- ceramic cartridge
- temperature limitation adjustable
- suitable for continuous flow water heaters
- connection type: G ⅜ connections
- connection dimension: DN15
- EU taxonomy: max. 6 l/min - Substantial Contribution (SC) possible



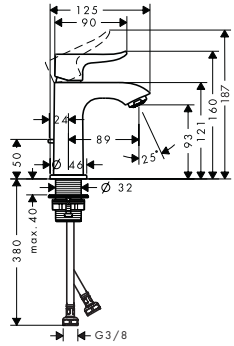

Sustainability

EcoSmart

Technologies

AirPower | Comfort Zone | Quick Clean

Certificates/declarations

EPD

Overview variants

ComfortZone	Projection (mm)	Spout height (mm)	Waste set	Material waste set	Finish	Code no.
100	89	93	pop-up	metal	Chrome	31088000
100	89	93	without	–	Chrome	31186000

Metris Single lever basin mixers

Features of all variants

- handle variant: lever handle
- spray type: normal spray
- maximum flow rate at 3 bar: 5 l/min
- ceramic cartridge
- temperature limitation adjustable
- suitable for continuous flow water heaters
- connection type: G ⅜ connections
- connection dimension: DN15
- EU taxonomy: max. 6 l/min - Substantial Contribution (SC) possible

110



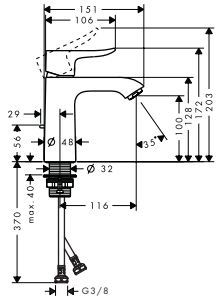

200



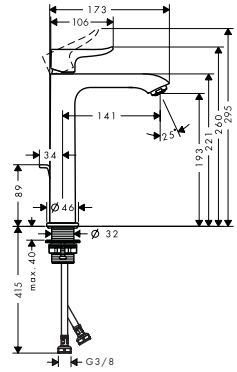

260



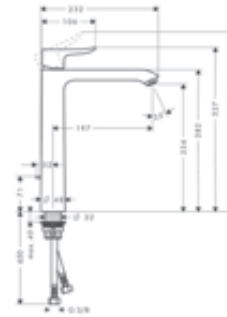

Sustainability

EcoSmart | CoolStart

Technologies

AirPower | Comfort Zone | Quick Clean

Certificates/declarations

EPD

Overview variants

ComfortZone	Projection (mm)	Spout height (mm)	Waste set	Material waste set	CoolStart	For wash bowls	Finish	Code no.
110	116	100	pop-up	metal	■	–	Chrome	31121000
110	116	100	pop-up	metal	–	–	Chrome	31080000
110	116	100	without	–	–	–	Chrome	31084000
200	141	193	pop-up	metal	–	–	Chrome	31183000
200	141	193	without	–	–	–	Chrome	31185000
260	197	254	pop-up	metal	–	■	Chrome	31082000

Measurements within scale drawings are in mm.
Technical specifications and units of measure are subject to change.

Metris Single lever basin mixers

Overview variants

ComfortZone	Projection (mm)	Spout height (mm)	Waste set	Material waste set	CoolStart	For wash bowls	Finish	Code no.
260	197	254	without	–	–	■	Chrome	31184000

Metris Single lever basin mixer 110 LowFlow without waste set

Features

- ComfortZone 110
- projection: 116 mm
- spout height: 100 mm
- handle variant: lever handle
- spray type: normal spray
- maximum flow rate at 3 bar: 3,5 l/min
- ceramic cartridge
- temperature limitation adjustable
- suitable for continuous flow water heaters
- connection type: G ⅜ connections
- connection dimension: DN15
- EU taxonomy: max. 6 l/min - Substantial Contribution (SC) possible



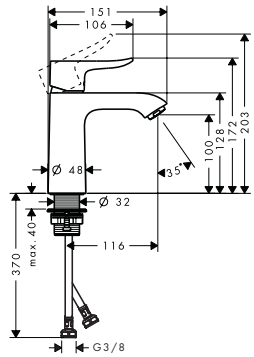

Sustainability

EcoSmart

Technologies

AirPower · Comfort Zone · Quick Clean

Finish	Code no.
Chrome	31204000

Metris Single lever basin mixer 110 for LowPressure/vented hot water cylinders with pop-up waste set

Features

- consists of: single lever basin mixer, waste set
- ComfortZone 110
- projection: 116 mm
- spout height: 100 mm
- handle variant: lever handle
- spray type: normal spray
- maximum flow rate at 3 bar: 5 l/min
- ceramic cartridge
- temperature limitation adjustable
- pop-up waste set G 1¼
- material waste set: metal
- connection type: copper pipe connections
- EU taxonomy: max. 6 l/min - Substantial Contribution (SC) possible



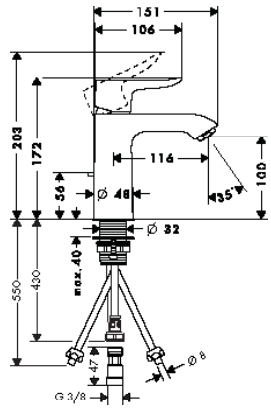

Technologies

Comfort Zone · Low Pressure

Finish	Code no.
Chrome	31074000

Measurements within scale drawings are in mm.
Technical specifications and units of measure are subject to change.

Metris Single lever basin mixers with swivel spout

Features of all variants

- consists of: single lever basin mixer, waste set
- ComfortZone 230
- projection: 155 mm
- spout height: 230 mm
- handle variant: lever handle
- swivel range 120°
- spray type: normal spray
- maximum flow rate at 3 bar: 5 l/min
- ceramic cartridge
- temperature limitation adjustable
- suitable for continuous flow water heaters
- material waste set: metal
- connection type: G ⅜ connections
- connection dimension: DN15
- handle position on the side: bottom-side at the base body (not suitable for wash bowls)
- EU taxonomy: max. 6 l/min - Substantial Contribution (SC) possible



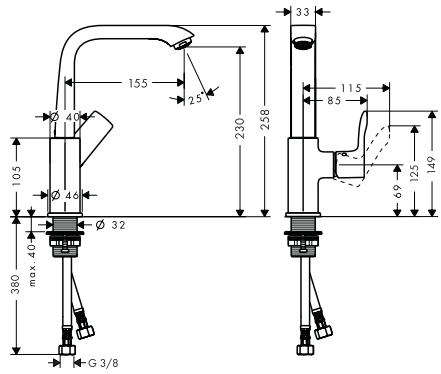

Sustainability

EcoSmart

Technologies

AirPower · Comfort Zone · Quick Clean

Certificates/declarations

EPD

Overview variants

ComfortZone	Projection (mm)	Spout height (mm)	Waste set	Material waste set	Finish	Code no.
230	155	230	pop-up	metal	Chrome	31087000
230	155	230	push-open	metal	Chrome	31187000

Metris Single lever basin mixers for concealed installation wall-mounted

Features of all variants

- handle variant: lever handle
- spray type: normal spray
- maximum flow rate at 3 bar: 5 l/min
- ceramic cartridge
- temperature limitation adjustable
- non-closing waste set
- material waste set: metal
- connection type: basic set
- connection dimension: DN15
- handle can be positioned on the right or left, depending on the basic set installation

165



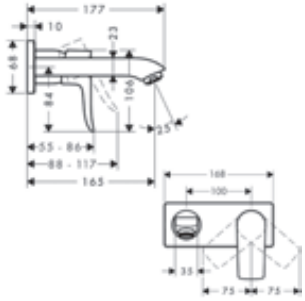

225



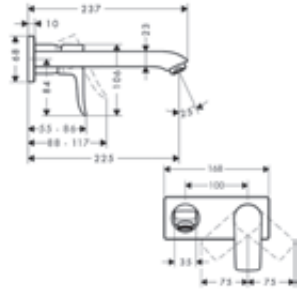

Sustainability

EcoSmart

Technologies

AirPower · Quick Clean

Certificates/declarations

EPD

Overview variants

Projection (mm)	Finish	Code no.
165	Chrome	31085000
225	Chrome	31086000
225	Chrome	31086007

Required parts:	Code no.
Basic set for single lever basin mixer for concealed installation wall-mounted	13622180

Measurements within scale drawings are in mm.
Technical specifications and units of measure are subject to change.

Metris Single lever basin mixer for concealed installation wall-mounted LowFlow 3,5 l/min with spout 16,5 cm

Features

- consists of: single lever basin mixer for concealed installation wall-mounted, waste set
- projection: 165 mm
- handle variant: lever handle
- spray type: normal spray
- maximum flow rate at 3 bar: 3,5 l/min
- ceramic cartridge
- temperature limitation adjustable
- suitable for continuous flow water heaters
- non-closing waste set
- material waste set: metal
- connection type: basic set
- connection dimension: DN15
- handle can be positioned on the right or left, depending on the basic set installation
- EU taxonomy: max. 6 l/min - Substantial Contribution (SC) possible



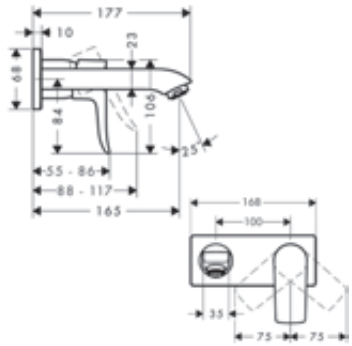

Sustainability

Technologies

Finish	Code no.
Chrome	31251000

Required parts: Code no.



Basic set for single lever basin mixer for concealed installation wall-mounted 13622180

Metris Single lever bidet mixer with pop-up waste set

Features

- consists of: single lever bidet mixer, waste set
- projection: 123 mm
- spout height: 112 mm
- ball-pivot joint
- spray type: laminar spray
- maximum flow rate at 3 bar: 7,5 l/min
- ceramic cartridge
- temperature limitation adjustable
- suitable for continous flow water heaters
- pop-up waste set G 1¼
- material waste set: metal
- connection type: G ⅜ connections
- connection dimension: DN15



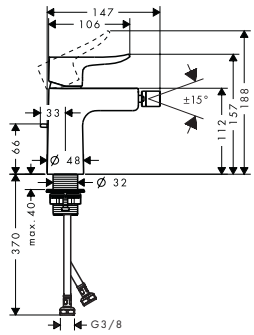

Certificates/declarations

Finish	Code no.
Chrome	31280000

Metris Single lever basin mixer with bidette hand shower and shower hose 160 cm

Features

- consists of: single lever basin mixer, bidette hand shower, shower holder, shower hose, waste set
- ComfortZone 110
- projection: 116 mm
- spout height: 100 mm
- handle variant: lever handle
- maximum flow rate at 3 bar: 5 l/min
- ceramic cartridge
- temperature limitation adjustable
- suitable for continuous flow water heaters
- push-open waste set G 1¼
- material waste set: metal
- connection type: G ⅜ connections
- connection dimension: DN15
- EU taxonomy: max. 6 l/min - Substantial Contribution (SC) possible



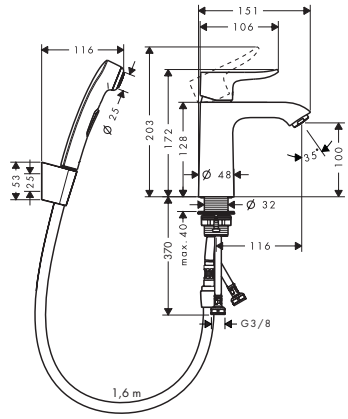

Sustainability

EcoSmart

Technologies

AirPower · Comfort Zone · Quick Clean

Certificates/declarations

EPD

Finish	Code no.
Chrome	31285000

Metris Single lever bath mixer floor-standing

Features

- consists of: single lever bath mixer floor standing, baton hand shower, shower hose, shower holder
- 2 functions
- projection: 209 mm
- spray type mixer: normal spray
- spray type hand shower: RainAir
- maximum flow rate at 3 bar: 19 l/min
- flow rate for bath spout at 3 bar: 19 l/min
- flow rate of hand shower at 3 bar: 14 l/min
- ceramic cartridge
- temperature limitation adjustable
- diverter with automatic resetting
- non-return valve
- connection dimension: DN15
- connection type: basic set
- deck mounted
- min. operating pressure: 1 bar
- max. operating pressure: 10 bar



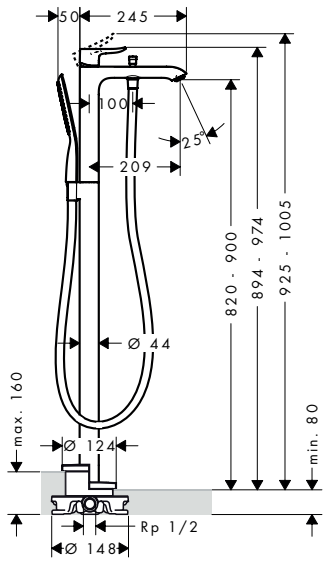

Technologies

AirPower · Quick Clean

Spray types

Rain Air

Certificates/declarations

EPD

Finish	Code no.
Chrome	31471000

Required parts:	Code no.
Basic set for mixers floor-standing	10452180

Optional parts:	Code no.
Sealing foil for basic set bath mixer floor-standing	96441000

Measurements within scale drawings are in mm.
Technical specifications and units of measure are subject to change.

Metris Single lever bath mixers

Features of all variants

- min. operating pressure: 1 bar
- max. operating pressure: 10 bar



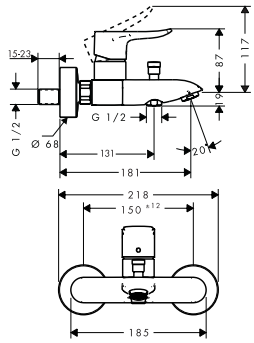

Technologies

AirPower | Quick Clean

Certificates/declarations

EPD

Overview variants

Centre distance (mm)	Finish	Code no.
150 ± 12	Chrome	31480000
150 ± 12	Chrome	31480007

Metris Single lever bath mixers for concealed installation for iBox universal

Features of all variants

- 2 functions
- ceramic cartridge
- temperature limitation adjustable
- diverter with automatic resetting
- with silencer
- connection type: basic set
- wall-mounted



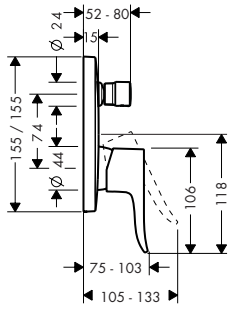



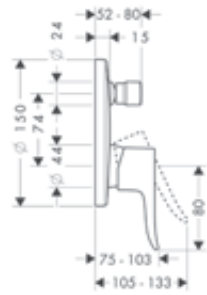

Certificates/declarations

EPD

Overview variants

Shape	Security combination EN 1717	Max. flow rate at 3 bar (l/min)	Finish	Code no.
softcube	–	29	Chrome	31454000
softcube	■	25	Chrome	31451000
round	–	29	Chrome	31493000
round	■	25	Chrome	31487000

Required parts (choose one):			Code no.
Option 1		iBox universal 2 Basic set	01500180
+		Adapter plate for iBox universal 2	13588000
Option 2		iBox universal Basic set	01800180

Measurements within scale drawings are in mm.
Technical specifications and units of measure are subject to change.

Metris Single lever bath mixer for concealed installation

Features

- 2 functions
- maximum flow rate at 3 bar: 30,7 l/min
- flow rate for bath spout at 3 bar: 30,7 l/min
- flow rate of hand shower at 3 bar: 27,4 l/min
- ceramic cartridge
- temperature limitation adjustable
- diverter with automatic resetting
- connection type: basic set
- wall-mounted
- min. operating pressure: 1 bar
- max. operating pressure: 10 bar



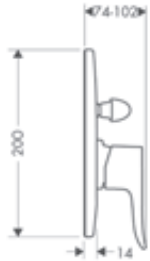

Finish	Code no.
Chrome	31484000

Required parts:	Code no.
Basic set for single lever bath mixer for concealed installation	31741180

Metris Bath spout

Features

- 1 function
- projection: 165 mm
- wall-mounted
- maximum flow rate at 3 bar: 20 l/min
- connection dimension: DN20
- spray type: normal spray



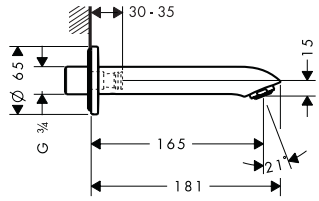

Technologies

AirPower · Quick Clean

Finish	Code no.
Chrome	31494000

Optional parts:	Code no.
Socket for G1/2 connection	95626000

Measurements within scale drawings are in mm.
Technical specifications and units of measure are subject to change.

Metris 3-hole rim mounted single lever bath mixer

Features

- consists of: 3-hole rim mounted single lever bath mixer, baton hand shower, shower holder
- 2 functions
- projection: 220 mm
- spray type mixer: normal spray
- spray type hand shower: RainAir
- maximum pull-out length of hand shower: 1.10 m
- maximum flow rate at 3 bar: 19 l/min
- flow rate for bath spout at 3 bar: 19 l/min
- flow rate of hand shower at 3 bar: 15 l/min
- ceramic cartridge
- temperature limitation adjustable
- connection dimension: DN15
- connection type: basic set
- installation on bath rim
- min. operating pressure: 1 bar
- max. operating pressure: 10 bar



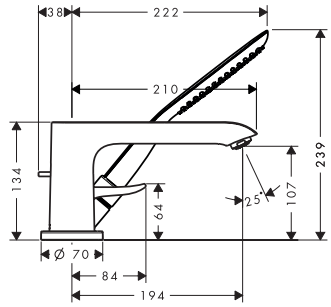

Technologies

AirPower · Quick Clean

Spray types

Rain Air

Finish	Code no.
Chrome	31190000

Required parts:	Code no.
Basic set for 3-hole rim mounted single lever bath mixer	13437180

Metris 4-hole rim mounted bath mixer

Features

- consists of: 4-hole rim mounted bath mixer, baton hand shower, shower holder
- 2 functions
- projection: 220 mm
- spray type mixer: normal spray
- spray type hand shower: RainAir
- maximum pull-out length of hand shower: 1.10 m
- maximum flow rate at 3 bar: 25 l/min
- flow rate for bath spout at 3 bar: 25 l/min
- flow rate of hand shower at 3 bar: 17 l/min
- ceramic valves hot/cold 90°
- connection dimension: DN15
- connection type: basic set
- installation on bath rim
- min. operating pressure: 1 bar
- max. operating pressure: 10 bar



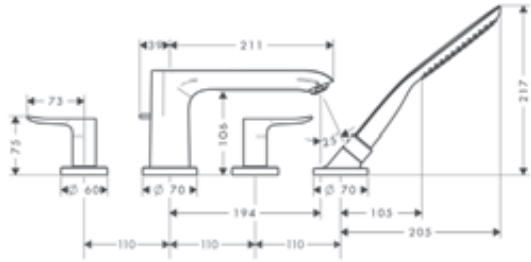

Technologies

AirPower · Quick Clean

Spray types

Rain Air

Finish	Code no.
Chrome	31442000

Required parts:	Code no.
Basic set for 4-hole rim mounted bath mixer	13444180

Metris Single lever shower mixers for exposed installation

Features of all variants

- min. operating pressure: 1 bar
- max. operating pressure: 10 bar



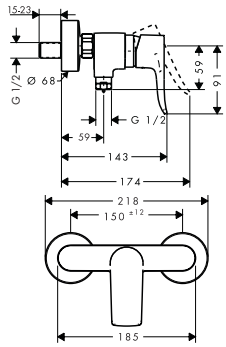

Certificates/declarations

EPD

Overview variants

	Finish	Code no.
	Chrome	31680000
	Chrome	31680007

Metris Single lever shower mixers for concealed installation for iBox universal

Features of all variants

- 1 function
- ceramic cartridge
- temperature limitation adjustable
- with silencer
- min. operating pressure: 1 bar
- max. operating pressure: 10 bar
- connection type: basic set



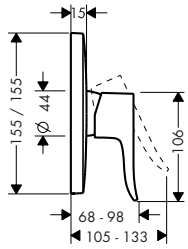



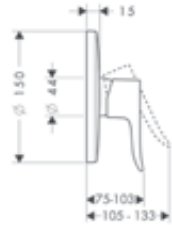

Certificates/declarations

EPD

Overview variants

	Shape	Finish	Code no.
	softcube	Chrome	31456000
	round	Chrome	31685000

Required parts (choose one):			Code no.
Option 1		iBox universal 2 Basic set	01500180
+		Adapter plate for iBox universal 2	13588000
Option 2		iBox universal Basic set	01800180

Measurements within scale drawings are in mm.
Technical specifications and units of measure are subject to change.

Metris Single lever shower mixer for concealed installation

Features

- 1 function
- maximum flow rate at 3 bar: 28 l/min
- min. operating pressure: 1 bar
- max. operating pressure: 10 bar
- connection type: basic set





Finish	Code no.
Chrome	31686000

Required parts:	Code no.
Basic set for single lever shower mixer for concealed installation	13620180

Measurements within scale drawings are in mm.
Technical specifications and units of measure are subject to change.



Finoris

Finoris Single lever basin mixers

Features of all variants

- consists of: single lever basin mixer, waste set
- handle variant: lever handle
- spray type: laminar spray
- maximum flow rate at 3 bar: 5 l/min
- ceramic cartridge
- temperature limitation adjustable
- suitable for continuous flow water heaters
- material waste set: metal
- connection type: G ⅜ connections
- connection dimension: DN15
- EU taxonomy: max. 6 l/min - Substantial Contribution (SC) possible

100



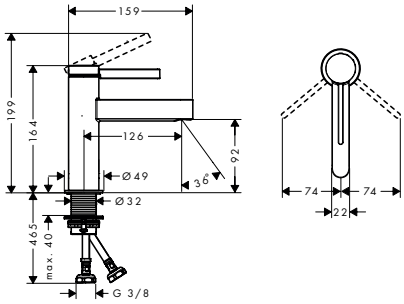

110



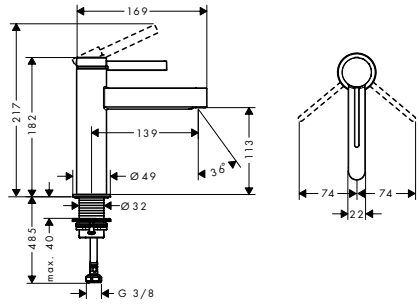

260



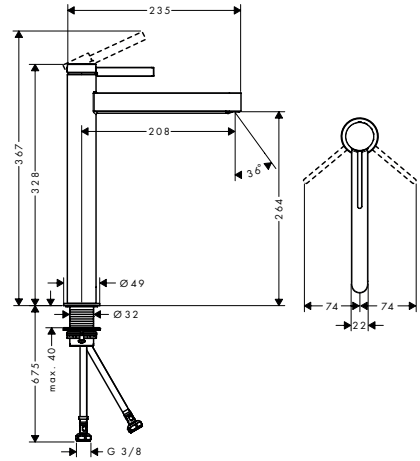

Sustainability

EcoSmart CoolStart

Technologies

Comfort Zone

Overview variants

ComfortZone	Projection (mm)	Spout height (mm)	Waste set	CoolStart	For wash bowls	Finish	Code no.
100	126	92	push-open	–	–	Chrome	76010000
						Matt Black	76010670
						Matt White	76010700
110	139	113	push-open	■	–	Chrome	76024000
						Matt Black	76024670
						Matt White	76024700
110	139	113	push-open	–	–	Chrome	76023000
						Matt Black	76023670
						Matt White	76023700
110	139	113	pop-up	–	–	Chrome	76020000
						Matt Black	76020670
						Matt White	76020700
260	208	264	push-open	–	■	Chrome	76070000
						Matt Black	76070670
						Matt White	76070700

Measurements within scale drawings are in mm.
Technical specifications and units of measure are subject to change.

Finoris Single lever basin mixer 230 with swivel spout and push-open waste set

Features

- consists of: single lever basin mixer, waste set
- ComfortZone 230
- projection: 178 mm
- spout height: 221 mm
- handle variant: lever handle
- swivel range 120°
- spray type: laminar spray
- maximum flow rate at 3 bar: 5 l/min
- ceramic cartridge
- temperature limitation adjustable
- suitable for continuous flow water heaters
- push-open waste set G 1¼
- material waste set: metal
- connection type: G ⅜ connections
- connection dimension: DN15
- EU taxonomy: max. 6 l/min - Substantial Contribution (SC) possible



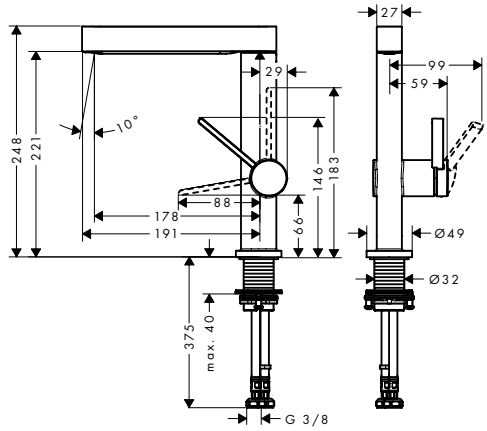

Sustainability

EcoSmart

Technologies

Comfort Zone

Finish	Code no.
Chrome	76060000
Matt Black	76060670
Matt White	76060700

Finoris Single lever basin mixer 230 with pull-out spray, 2jet and push-open waste set

Features

- consists of: single lever basin mixer, waste set
- ComfortZone 230
- projection: 191 mm
- spout height: 229 mm
- handle variant: lever handle
- spray type: laminar spray, PowderRain
- spray returns through pressing spray diverter and spray returns automatically through handle closing
- extension length: 50 cm
- spray disc surface: graphite
- maximum flow rate at 3 bar: 5 l/min
- ceramic cartridge
- temperature limitation adjustable
- push-open waste set G 1¼
- material waste set: metal
- connection type: G ⅜ connections
- connection dimension: DN15
- non-return valve
- EU taxonomy: max. 6 l/min - Substantial Contribution (SC) possible



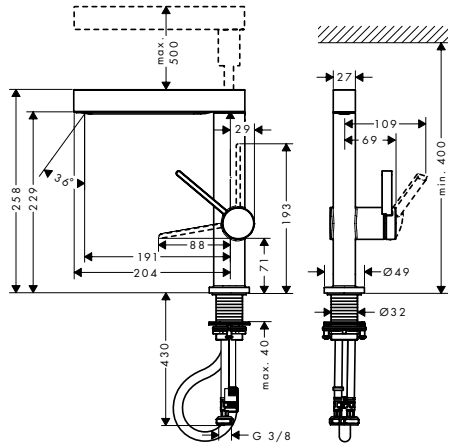

Sustainability

EcoSmart

Technologies

Comfort Zone | Quick Clean | Pull-out Faucet

Finish	Code no.
Chrome	76063000
Matt Black	76063670
Matt White	76063700

Measurements within scale drawings are in mm.
Technical specifications and units of measure are subject to change.

Finoris Pillar tap 100 with lever handle for cold water or pre-adjusted water without waste set

Features

- ComfortZone 100
- projection: 126 mm
- spout height: 92 mm
- handle variant: lever handle
- spray type: laminar spray
- maximum flow rate at 3 bar: 5 l/min
- ceramic cartridge
- for cold water connection
- connection type: G ⅜ connection hose
- connection dimension: DN15
- EU taxonomy: max. 6 l/min - Substantial Contribution (SC) possible



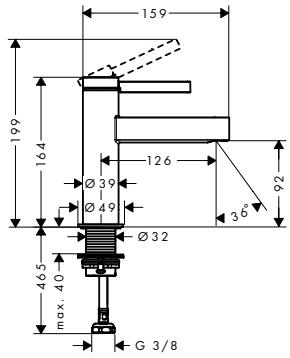

Sustainability

EcoSmart

Technologies

Comfort Zone

Finish	Code no.
Chrome	76013000
Matt Black	76013670
Matt White	76013700

Finoris 3-hole basin mixers

Features of all variants

- consists of: 3-hole basin mixer, waste set
- projection: 169 mm
- handle variant: lever handle
- spray type: laminar spray
- maximum flow rate at 3 bar: 5 l/min
- ceramic valves hot/cold 90°
- suitable for continuous flow water heaters
- push-open waste set G 1¼
- material waste set: metal
- connection type: G ⅜ connection hose
- connection dimension: DN15
- EU taxonomy: max. 6 l/min - Substantial Contribution (SC) possible

110



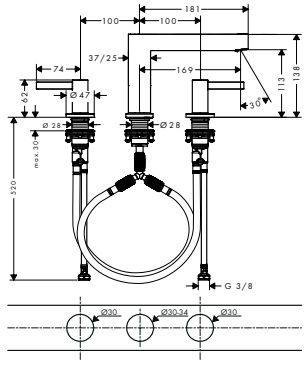

160



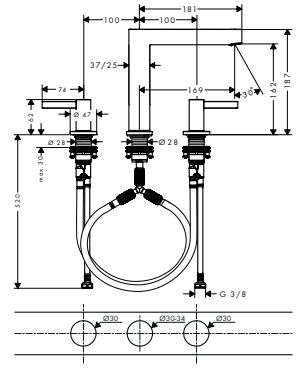

Sustainability

EcoSmart

Technologies

Comfort Zone

Overview variants

ComfortZone	Projection (mm)	Spout height (mm)	Finish	Code no.
110	169	113	Chrome	76033000
			Matt Black	76033670
			Matt White	76033700
160	169	162	Chrome	76034000
			Matt Black	76034670
			Matt White	76034700

Measurements within scale drawings are in mm.
Technical specifications and units of measure are subject to change.

Finoris Single lever basin mixers for concealed installation wall-mounted

Features of all variants

- consists of: single lever basin mixer for concealed installation wall-mounted, waste set
- handle variant: lever handle
- spray type: laminar spray
- maximum flow rate at 3 bar: 5 l/min
- ceramic cartridge
- suitable for continuous flow water heaters
- non-closing waste set
- material waste set: metal
- connection type: basic set
- connection dimension: DN15
- handle can be positioned on the right or left, depending on the basic set installation
- EU taxonomy: max. 6 l/min - Substantial Contribution (SC) possible

168



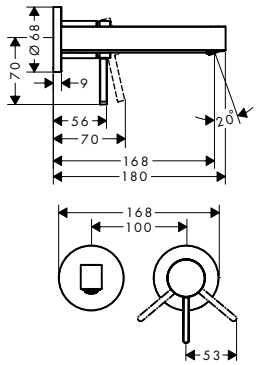

228



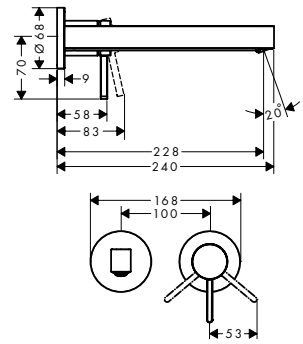

Sustainability

EcoSmart

Overview variants

	Projection (mm)	Finish	Code no.
	168	Chrome	76051000
		Matt Black	76051670
		Matt White	76051700
	228	Chrome	76050000
		Matt Black	76050670
		Matt White	76050700

Required parts: Code no.



Basic set for single lever basin mixer for concealed installation wall-mounted 13622180

Finoris Single lever bidet mixer with push-open waste set

Features

- consists of: single lever bidet mixer, waste set
- projection: 129 mm
- spout height: 99 mm
- ball-pivot joint
- spray type: laminar spray
- maximum flow rate at 3 bar: 7,5 l/min
- ceramic cartridge
- suitable for continous flow water heaters
- push-open waste set G 1¼
- material waste set: metal
- connection type: G ⅜ connections
- connection dimension: DN15



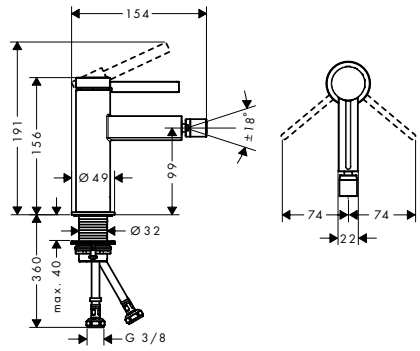

Finish	Code no.
Chrome	76200000
Matt Black	76200670
Matt White	76200700

Measurements within scale drawings are in mm.
Technical specifications and units of measure are subject to change.

Finoris Single lever bath mixer floor-standing

Features

- consists of: single lever bath mixer floor standing, baton hand shower, shower hose, shower holder
- 2 functions
- projection: 210 mm
- spray type mixer: normal spray
- spray type hand shower: Rain, Mono
- maximum flow rate at 3 bar: 20,6 l/min
- flow rate for bath spout at 3 bar: 20,6 l/min
- flow rate of hand shower at 3 bar: 13,6 l/min
- ceramic cartridge
- diverter with automatic resetting
- non-return valve
- connection dimension: DN15
- connection type: basic set
- deck mounted
- min. operating pressure: 1 bar
- max. operating pressure: 10 bar



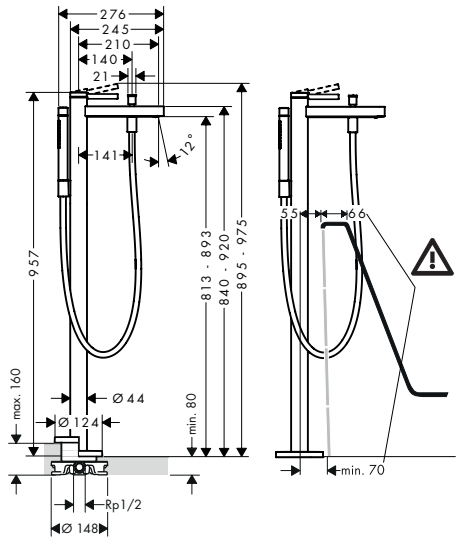

Technologies

AirPower

Spray types

Rain Mono

Finish	Code no.
Chrome	76445000
Matt Black	76445670
Matt White	76445700

Consisting of:	Included in	Code no.
Isiflex Shower hose 125 cm	76445XXX	28272XXX

Required parts:	Code no.
Basic set for mixers floor-standing	10452180

Optional parts:	Code no.
Sealing foil for basic set bath mixer floor-standing	96441000

Finoris Single lever bath mixer for exposed installation

Features

- 2 functions
- projection: 194 mm
- centre distance: 150 ± 12 mm
- spray type mixer: normal spray
- maximum flow rate at 3 bar: 19 l/min
- flow rate for bath spout at 3 bar: 19 l/min
- flow rate of hand shower at 3 bar: 14,7 l/min
- ceramic cartridge
- pressure diverter Select with automatic resetting
- protected against backflow, according to DIN EN 1717
- with silencer
- suitable for continous flow water heaters
- connection dimension: DN15
- connection type: s-shaped connections
- wall-mounted
- min. operating pressure: 1 bar
- max. operating pressure: 10 bar



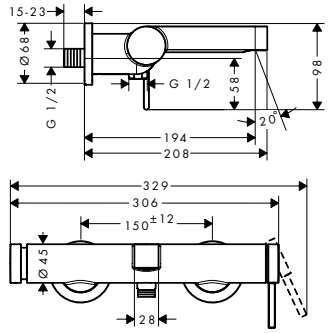

Technologies

Select AirPower

Finish	Code no.
Chrome	76420000
Matt Black	76420670
Matt White	76420700

Measurements within scale drawings are in mm.
Technical specifications and units of measure are subject to change.

Finoris Single lever bath mixer for concealed installation for iBox universal

Features

- 2 functions
- flow rate upper outlet: 21 l/min
- flow rate lower outlet: 29 l/min
- maximum flow rate at 3 bar: 29 l/min
- ceramic cartridge
- temperature limitation adjustable
- diverter with automatic resetting
- with silencer
- suitable for continous flow water heaters
- connection type: basic set
- wall-mounted
- min. operating pressure: 1 bar
- max. operating pressure: 10 bar



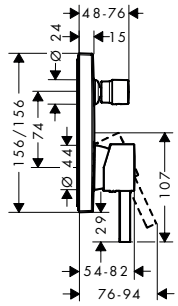

Finish	Code no.
Chrome	76415000
Matt Black	76415670
Matt White	76415700

Required parts (choose one):			Code no.
Option 1		iBox universal 2 Basic set	01500180
+		Adapter plate for iBox universal 2	13588000
Option 2		iBox universal Basic set	01800180

Finoris Bath spout

Features

- 1 function
- connection type: G ½
- with escutcheon
- projection: 174 mm
- wall-mounted
- maximum flow rate at 3 bar: 20,3 l/min
- spray type: normal spray



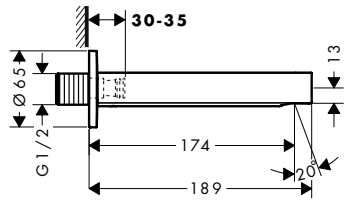

Technologies

AirPower

Finish	Code no.
Chrome	76410000
Matt Black	76410670
Matt White	76410700

Optional parts:		Code no.
	Connecting thread G ¾	92504000

Measurements within scale drawings are in mm.
Technical specifications and units of measure are subject to change.

Finoris 4-hole rim mounted bath mixer with sBox

Features

- consists of: 4-hole rim mounted bath mixer, hand shower, shower holder, shower hose, hose box
- 2 functions
- projection: 152 mm
- spray type mixer: normal spray
- spray type hand shower: PowderRain
- maximum pull-out length of hand shower: 1,45 m
- sBox for quiet, smooth and protected hose guidance
- maximum flow rate at 3 bar: 23,5 l/min
- flow rate for bath spout at 3 bar: 23,5 l/min
- flow rate of hand shower at 3 bar: 10,2 l/min
- ceramic valves hot/cold 90°
- non-return valve
- connection dimension: DN15
- connection type: basic set
- installation on bath rim
- min. operating pressure: 1 bar
- max. operating pressure: 10 bar



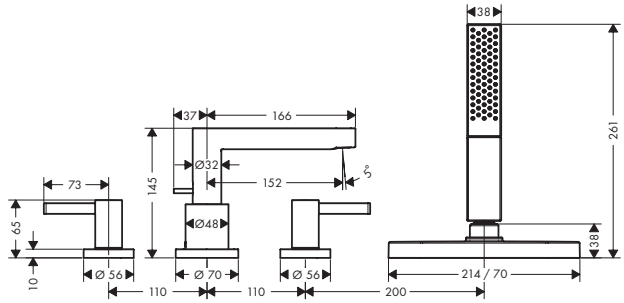

Technologies

AirPower

Finish	Code no.
Chrome	76444000
Matt Black	76444670
Matt White	76444700

Consisting of:	Included in	Code no.
Rainfinity Baton hand shower 100 1jet	76444XXX	26866XXX
sBox Finish set oval	76444XXX	28020XXX

Required parts:	Code no.
Basic set for 4-hole rim mounted bath mixer	13440180

Finoris Single lever shower mixer for exposed installation

Features

- 1 function
- centre distance: 150 ± 12 mm
- maximum flow rate at 3 bar: 12,1 l/min
- flow rate of hand shower at 3 bar: 12,1 l/min
- ceramic cartridge
- non-return valve
- with silencer
- suitable for continous flow water heaters
- hose connection DN15
- connection dimension: DN15
- min. operating pressure: 1 bar
- max. operating pressure: 10 bar
- connection type: s-shaped connections



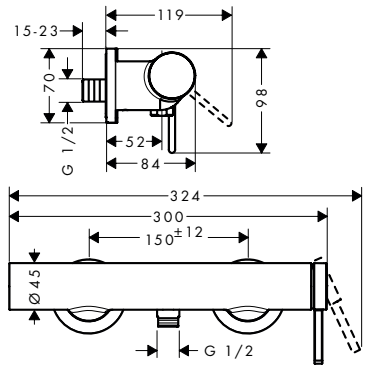

Finish	Code no.
Chrome	76620000
Matt Black	76620670
Matt White	76620700

Measurements within scale drawings are in mm.
Technical specifications and units of measure are subject to change.

Finoris Single lever shower mixer for concealed installation for iBox universal

Features

- 1 function
- maximum flow rate at 3 bar: 29,3 l/min
- ceramic cartridge
- temperature limitation adjustable
- with silencer
- suitable for continous flow water heaters
- min. operating pressure: 1 bar
- max. operating pressure: 10 bar
- connection type: basic set



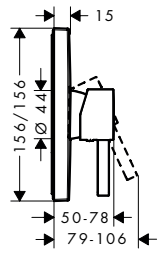

Finish	Code no.
Chrome	76615000
Matt Black	76615670
Matt White	76615700

Required parts (choose one):			Code no.
Option 1		iBox universal 2 Basic set	01500180
+		Adapter plate for iBox universal 2	13588000
Option 2		iBox universal Basic set	01800180

Measurements within scale drawings are in mm.
Technical specifications and units of measure are subject to change.



Tecturis

Tecturis S Single lever basin mixers Fine CoolStart

Features of all variants

- handle variant: lever handle
- spray type: normal spray
- ceramic cartridge
- suitable for continuous flow water heaters
- connection dimension: DN15
- cold water in basic handle position

110



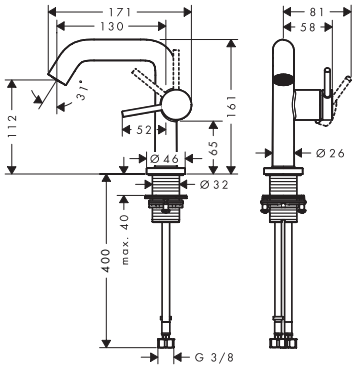

150



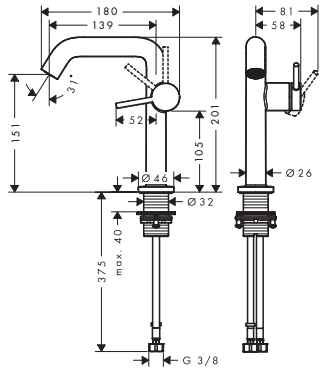

240



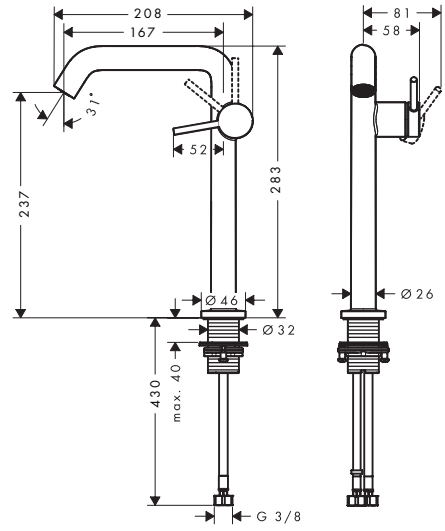

Sustainability

Eco Smart+ | EcoSmart | CoolStart

Technologies

AirPower | Comfort Zone

Overview variants

ComfortZone	Projection (mm)	Spout height (mm)	Waste set	Material waste set	CoolStart	For wash bowls	Max. flow rate at 3 bar (l/min)	Finish	Code no.
110	130	112	push-open	metal	■	–	4	Chrome	73320000
								Brushed Bronze	73320140
								Matt Black	73320670
								Matt White	73320700
110	130	112	pop-up	metal	■	–	4	Chrome	73323000
								Brushed Bronze	73323140
								Matt Black	73323670
								Matt White	73323700
110	130	112	without	–	■	–	4	Chrome	73321000
								Brushed Bronze	73321140
								Matt Black	73321670
								Matt White	73321700
110	130	112	push-open	metal	■	–	5	Chrome	73322000
								Brushed Bronze	73322140
								Matt Black	73322670
								Matt White	73322700
150	139	151	push-open	metal	■	–	4	Chrome	73340000
								Brushed Bronze	73340140
								Matt Black	73340670
								Matt White	73340700

Measurements within scale drawings are in mm.
Technical specifications and units of measure are subject to change.

Tecturis S Single lever basin mixers Fine CoolStart

Overview variants

ComfortZone	Projection (mm)	Spout height (mm)	Waste set	Material waste set	CoolStart	For wash bowls	Max. flow rate at 3 bar (l/min)	Finish	Code no.
150	139	151	without	–	■	–	4	Chrome	73341000
								Brushed Bronze	73341140
								Matt Black	73341670
								Matt White	73341700
150	139	151	push-open	metal	■	–	5	Chrome	73342000
								Brushed Bronze	73342140
								Matt Black	73342670
								Matt White	73342700
240	167	230	push-open	metal	■	■	4	Chrome	73370000
								Brushed Bronze	73370140
								Matt Black	73370670
								Matt White	73370700
240	167	230	without	–	■	■	4	Chrome	73372000
								Brushed Bronze	73372140
								Matt Black	73372670
								Matt White	73372700
240	167	230	push-open	metal	■	■	5	Chrome	73373000
								Brushed Bronze	73373140
								Matt Black	73373670
								Matt White	73373700
110	130	112	push-open	metal	■	–	5	Chrome	73320007
240	167	230	push-open	metal	■	■	5	Chrome	73370007

Tecturis S Single lever basin mixers Fine CoolStart with swivel spout

Features of all variants

- consists of: single lever basin mixer, waste set
- ComfortZone 210
- projection: 154 mm
- spout height: 187 mm
- handle variant: lever handle
- swivel range 120°
- spray type: normal spray
- ceramic cartridge
- suitable for continuous flow water heaters
- push-open waste set G 1¼
- material waste set: metal
- connection type: G ⅜ connections
- connection dimension: DN15
- cold water in basic handle position
- EU taxonomy: max. 6 l/min - Substantial Contribution (SC) possible



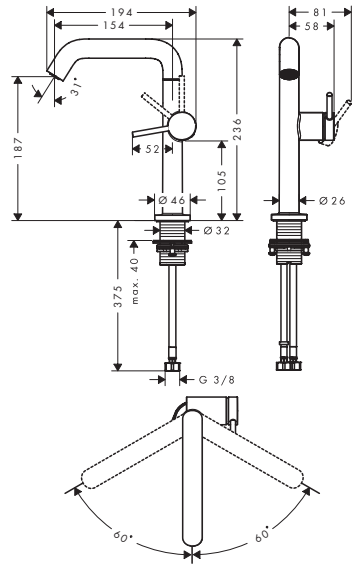

Sustainability

Eco Smart+ · EcoSmart · CoolStart

Technologies

AirPower · Comfort Zone

For more information about this product, please see the next page.

Measurements within scale drawings are in mm.
Technical specifications and units of measure are subject to change.

Tecturis S Single lever basin mixers Fine CoolStart with swivel spout

Overview variants

ComfortZone	Projection (mm)	Spout height (mm)	CoolStart	Max. flow rate at 3 bar (l/min)	Finish	Code no.
210	154	187	■	4	Chrome	73360000
					Brushed Bronze	73360140
					Matt Black	73360670
					Matt White	73360700
210	154	187	■	5	Chrome	73364000
					Brushed Bronze	73364140
					Matt Black	73364670
					Matt White	73364700

Tecturis S 2-hole basin mixer 150 CoolStart EcoSmart+ with waste set

Features

- consists of: 2-hole basin mixer, waste set
- ComfortZone 150
- projection: 139 mm
- spout height: 151 mm
- spray type: normal spray
- maximum flow rate at 3 bar: 4 l/min
- Select cartridge with temperature control
- comfortable operation turning and pushing movement
- material control element: metal housing, safety glass
- suitable for continuous flow water heaters
- non-closing waste set
- material waste set: metal
- connection type: G ⅜ connections
- connection dimension: DN15
- flexible positioning of control element possible
- cold water in basic handle position
- no soiling of the outlet due to water spots
- quick connect hose
- EU taxonomy: max. 6 l/min - Substantial Contribution (SC) possible



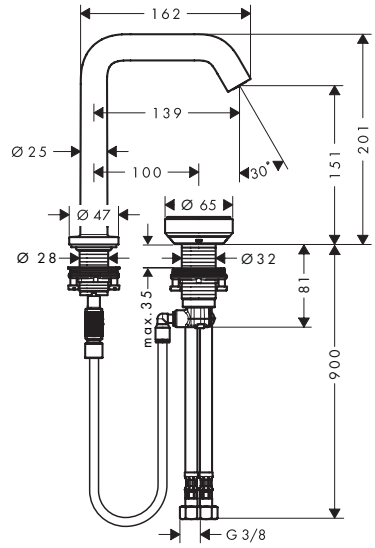

Sustainability

Technologies

Finish	Code no.
Chrome	73353000
Brushed Bronze	73353140
Matt Black	73353670
Matt White	73353700

Measurements within scale drawings are in mm.
Technical specifications and units of measure are subject to change.

Tecturis S 3-hole basin mixer 150 EcoSmart+ with push-open waste set

Features

- consists of: 3-hole basin mixer, waste set
- ComfortZone 150
- projection: 139 mm
- spout height: 152 mm
- handle variant: lever handle
- spray type: normal spray
- maximum flow rate at 3 bar: 4 l/min
- ceramic cartridge
- suitable for continuous flow water heaters
- push-open waste set G 1¼
- material waste set: metal
- connection type: G ⅜ connections
- connection dimension: DN15
- EU taxonomy: max. 6 l/min - Substantial Contribution (SC) possible



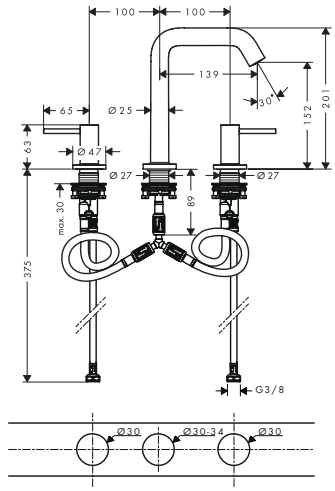

Sustainability

Eco Smart+

Technologies

AirPower | Comfort Zone

Finish	Code no.
Chrome	73330000
Brushed Bronze	73330140
Matt Black	73330670
Matt White	73330700

Tecturis S Single lever basin mixers

Features of all variants

- handle variant: lever handle
- spray type: normal spray
- ceramic cartridge
- temperature limitation adjustable
- suitable for continuous flow water heaters
- connection dimension: DN15

80



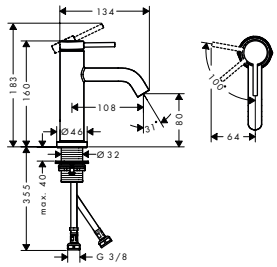

110



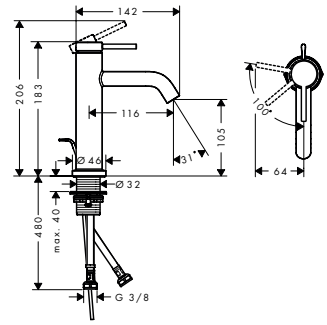

Sustainability

Eco Smart+ | EcoSmart | CoolStart

Technologies

AirPower | Comfort Zone

Overview variants

ComfortZone	Projection (mm)	Spout height (mm)	Waste set	Material waste set	CoolStart	Max. flow rate at 3 bar (l/min)	Finish	Code no.
80	108	80	pop-up	metal	■	4	Chrome	73302000
							Brushed Bronze	73302140
							Matt Black	73302670
							Matt White	73302700
80	108	80	without	–	■	4	Chrome	73301000
							Brushed Bronze	73301140
							Matt Black	73301670
							Matt White	73301700
80	108	80	pop-up	metal	■	5	Chrome	73305000
							Brushed Bronze	73305140
							Matt Black	73305670
							Matt White	73305700

For more information about this product, please see the next page.

Measurements within scale drawings are in mm.
Technical specifications and units of measure are subject to change.

Tecturis S Single lever basin mixers

Overview variants

ComfortZone	Projection (mm)	Spout height (mm)	Waste set	Material waste set	CoolStart	Max. flow rate at 3 bar (l/min)	Finish	Code no.
110	116	105	pop-up	metal	■	4	Chrome	73314000
							Brushed Bronze	73314140
							Matt Black	73314670
							Matt White	73314700
110	116	105	without	–	■	4	Chrome	73312000
							Brushed Bronze	73312140
							Matt Black	73312670
							Matt White	73312700
110	116	105	pop-up	metal	–	4	Chrome	73310000
							Brushed Bronze	73310140
							Matt Black	73310670
							Matt White	73310700
110	116	105	without	–	–	4	Chrome	73311000
							Brushed Bronze	73311140
							Matt Black	73311670
							Matt White	73311700
110	116	105	pop-up	metal	■	5	Chrome	73318000
							Brushed Bronze	73318140
							Matt Black	73318670
							Matt White	73318700
110	116	105	without	–	■	5	Chrome	73317000
							Brushed Bronze	73317140
							Matt Black	73317670
							Matt White	73317700
110	116	105	pop-up	metal	■	5	Chrome	73314007

Tecturis S Single lever basin mixer 110 with bidette hand shower and shower hose 160 cm

Features

- consists of: single lever basin mixer, bidette hand shower, shower holder, shower hose
- ComfortZone 110
- projection: 116 mm
- spout height: 105 mm
- handle variant: lever handle
- spray type: normal spray
- spray type Bidette: shower spray
- maximum flow rate at 3 bar: 5 l/min
- ceramic cartridge
- temperature limitation adjustable
- suitable for continuous flow water heaters
- push-open waste set G 1¼
- material waste set: metal
- connection type: G ⅜ connections
- connection dimension: DN15
- EU taxonomy: max. 6 l/min - Substantial Contribution (SC) possible



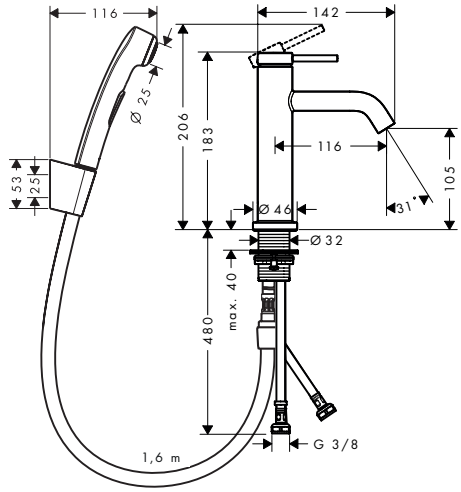

Sustainability

EcoSmart

Technologies

AirPower Comfort Zone

Finish	Code no.
Chrome	73211000
Matt Black	73211670

Measurements within scale drawings are in mm.
Technical specifications and units of measure are subject to change.

Tecturis S Pillar tap 80 EcoSmart+ with lever handle for cold water or pre-adjusted water without waste set

Features

- ComfortZone 80
- projection: 108 mm
- spout height: 80 mm
- handle variant: lever handle
- spray type: normal spray
- maximum flow rate at 3 bar: 4 l/min
- ceramic cartridge
- for cold water connection
- connection type: G ⅜ connections
- connection dimension: DN15
- EU taxonomy: max. 6 l/min - Substantial Contribution (SC) possible



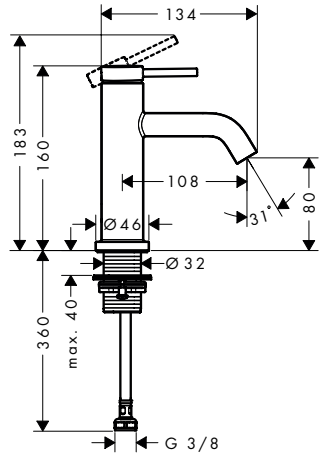

Sustainability

Technologies

Finish	Code no.
Chrome	73313000
Brushed Bronze	73313140
Matt Black	73313670
Matt White	73313700

Tecturis S Single lever basin mixers for concealed installation wall-mounted

Features of all variants

- consists of: single lever basin mixer for concealed installation wall-mounted, waste set
- handle variant: lever handle
- spray type: normal spray
- maximum flow rate at 3 bar: 4 l/min
- ceramic cartridge
- temperature limitation adjustable
- suitable for continuous flow water heaters
- non-closing waste set
- material waste set: metal
- connection type: basic set
- connection dimension: DN15
- handle can be positioned on the right or left, depending on the basic set installation
- EU taxonomy: max. 6 l/min - Substantial Contribution (SC) possible

165



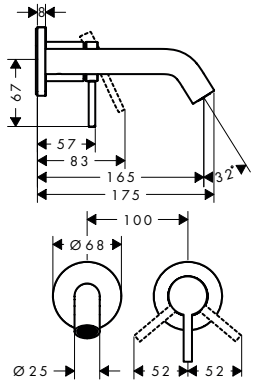

225



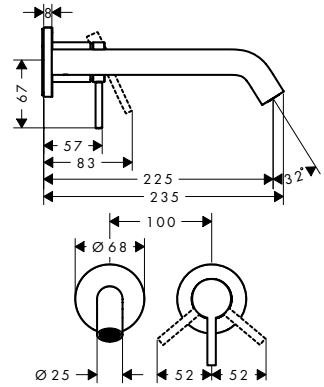

Sustainability

Technologies

Overview variants

	Projection (mm)	Finish	Code no.
	165	Chrome	73350000
		Brushed Bronze	73350140
		Matt Black	73350670
		Matt White	73350700
	225	Chrome	73351000
		Brushed Bronze	73351140
		Matt Black	73351670
		Matt White	73351700

Required parts:		Code no.
	Basic set for single lever basin mixer for concealed installation wall-mounted	13622180

Measurements within scale drawings are in mm.
Technical specifications and units of measure are subject to change.

Tecturis S Single lever bidet mixer with pop-up waste set

Features

- consists of: single lever bidet mixer, waste set
- projection: 148 mm
- spout height: 100 mm
- spray type: laminar spray
- maximum flow rate at 3 bar: 5 l/min
- ceramic cartridge
- temperature limitation adjustable
- suitable for continous flow water heaters
- pop-up waste set G 1¼
- material waste set: metal
- connection type: G ⅜ connections
- connection dimension: DN15
- EU taxonomy: max. 6 l/min - Substantial Contribution (SC) possible



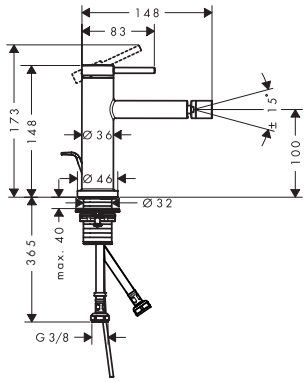

Finish	Code no.
Chrome	73201000
Brushed Bronze	73201140
Matt Black	73201670
Matt White	73201700

Tecturis S Single lever bath mixer floor-standing

Features

- consists of: single lever bath mixer floor standing, baton hand shower, shower hose, shower holder
- 2 functions
- projection: 194 mm
- spray type mixer: normal spray
- spray type hand shower: Rain, Mono
- maximum flow rate at 3 bar: 21 l/min
- flow rate for bath spout at 3 bar: 21 l/min
- flow rate of hand shower at 3 bar: 14 l/min
- ceramic cartridge
- pressure diverter Select with automatic resetting
- non-return valve
- connection dimension: DN15
- connection type: basic set
- deck mounted
- min. operating pressure: 1 bar
- max. operating pressure: 10 bar



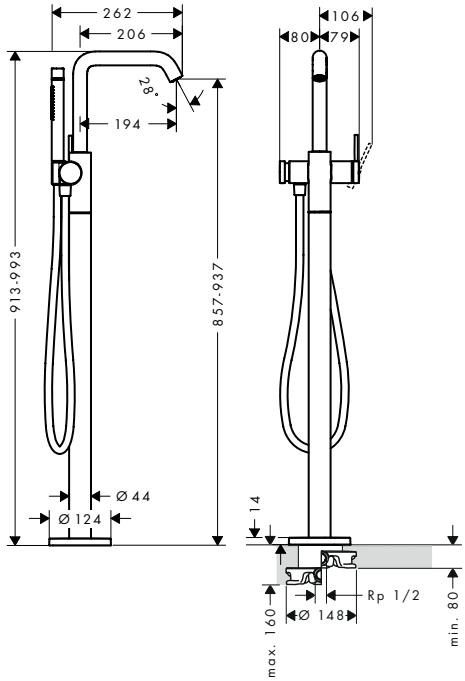

Technologies

Select, AirPower

Spray types

Rain, Mono

Finish	Code no.
Chrome	73440000
Brushed Bronze	73440140
Matt Black	73440670
Matt White	73440700

Consisting of:	Included in	Code no.
Isiflex Shower hose 125 cm	73440XXX	28272XXX

Required parts:	Code no.
Basic set for mixers floor-standing	10452180

Optional parts:	Code no.
Sealing foil for basic set bath mixer floor-standing	96441000

Measurements within scale drawings are in mm.
Technical specifications and units of measure are subject to change.

Tecturis S Single lever bath mixer for exposed installation

Features

- 2 functions
- projection: 209 mm
- centre distance: 150 ± 12 mm
- spray type mixer: normal spray
- flow rate for bath spout at 3 bar: 19 l/min
- flow rate of hand shower at 3 bar: 14,7 l/min
- ceramic cartridge
- temperature limitation adjustable
- pressure diverter Select with automatic resetting
- protected against backflow, according to DIN EN 1717
- with silencer
- suitable for continous flow water heaters
- connection dimension: DN15
- connection type: s-shaped connections
- wall-mounted
- min. operating pressure: 1 bar
- max. operating pressure: 10 bar



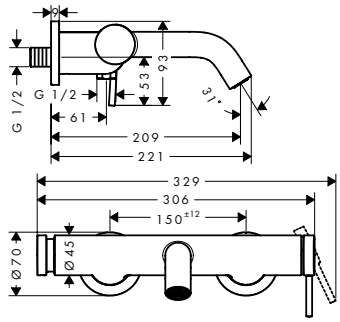

Technologies

Finish	Code no.
Chrome	73422000
Brushed Bronze	73422140
Matt Black	73422670
Matt White	73422700

DuoTurn S Mixer for concealed installation for 2 functions

Features

- 2 functions
- volume control and diverter for 2 functions
- maximum flow rate at 3 bar: 29,5 l/min
- flow rate upper outlet: 29,5 l/min
- flow rate lower outlet: 29,5 l/min
- ceramic cartridge for temperature control, shut-off/ diverter valve
- flat escutcheon for more space in the shower
- easy installation due to pre-assembled function block
- handles always at the same height regardless of the installation depth of the basic set
- escutcheon can be aligned by +/- 3°
- material escutcheon: plastic
- material handles: metal
- min. operating pressure: 1 bar
- max. operating pressure: 10 bar
- mixer is delivered with buttons Rain small, Rain large, hand sower, Waterfall, bath tub
- connection type: basic set iBox universal 2 (# 01500180)



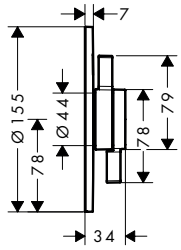

Sustainability

Finish	Code no.
Chrome	75418000
Brushed Bronze	75418140
Matt Black	75418670
Matt White	75418700

Required parts:	Code no.
iBox universal 2 Basic set	01500180

Measurements within scale drawings are in mm.
Technical specifications and units of measure are subject to change.

Tecturis S Bath spout

Features

- 1 function
- connection type: G ½
- with escutcheon
- projection: 198 mm
- wall-mounted
- maximum flow rate at 3 bar: 22,5 l/min
- connection dimension: DN15
- spray type: normal spray



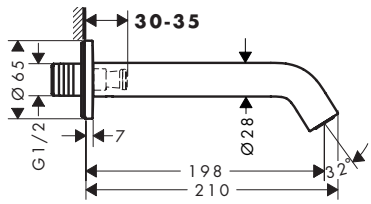

Technologies

AirPower

Finish	Code no.
Chrome	73411000
Brushed Bronze	73411140
Matt Black	73411670
Matt White	73411700

Optional parts:	Code no.
Socket for G1/2 connection	95626000

Tecturis S 3-hole rim mounted single lever bath mixer with sBox

Features

- consists of: 3-hole rim mounted single lever bath mixer, hand shower, shower holder, shower hose, hose box
- 2 functions
- projection: 194 mm
- spray type mixer: normal spray
- spray type hand shower: Rain, Mono
- maximum pull-out length of hand shower: 1,45 m
- sBox for quiet, smooth and protected hose guidance
- maximum flow rate at 3 bar: 20 l/min
- ceramic cartridge
- diverter with automatic resetting
- non-return valve
- protected against backflow, according to DIN EN 1717
- connection dimension: DN15
- connection type: basic set
- installation on bath rim
- min. operating pressure: 1 bar
- max. operating pressure: 10 bar



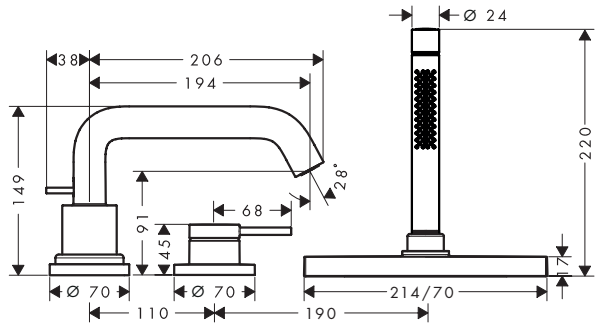

Technologies

AirPower

Spray types

Rain Mono

Finish	Code no.
Chrome	73447000
Brushed Bronze	73447140
Matt Black	73447670
Matt White	73447700

Required parts:	Code no.
Basic set for 3-hole rim mounted single lever bath mixer	13481180

Measurements within scale drawings are in mm.
Technical specifications and units of measure are subject to change.

Tecturis S Single lever shower mixer for exposed installation

Features

- 1 function
- centre distance: 150 ± 12 mm
- maximum flow rate at 3 bar: 24 l/min
- flow rate of hand shower at 3 bar: 12,3 l/min
- ceramic cartridge
- temperature limitation adjustable
- non-return valve
- with silencer
- hose connection DN15
- connection dimension: DN15
- min. operating pressure: 1 bar
- max. operating pressure: 10 bar
- connection type: s-shaped connections



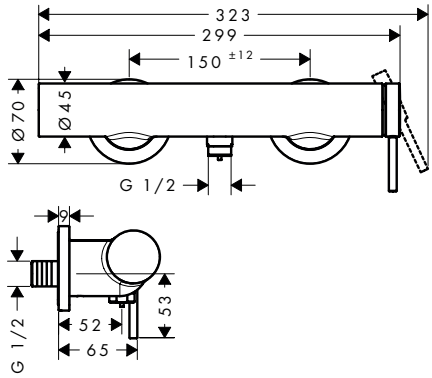

Finish	Code no.
Chrome	73622000
Brushed Bronze	73622140
Matt Black	73622670
Matt White	73622700

DuoTurn S Mixer for concealed installation for 1 function

Features

- 1 function
- volume control for 1 function
- maximum flow rate at 3 bar: 29,5 l/min
- ceramic cartridge for temperature control, 1/2" ceramic shut-off valve
- flat escutcheon for more space in the shower
- easy installation due to pre-assembled function block
- handles always at the same height regardless of the installation depth of the basic set
- escutcheon can be aligned by +/- 3°
- material escutcheon: plastic
- material handles: metal
- min. operating pressure: 1 bar
- max. operating pressure: 10 bar
- mixer is delivered with button hand shower
- connection type: basic set iBox universal 2 (# 01500180)



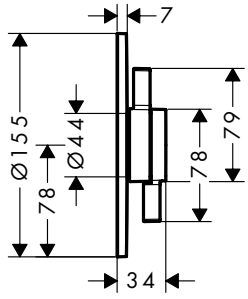

Sustainability

Water Flow Control

Finish	Code no.
Chrome	75618000
Brushed Bronze	75618140
Matt Black	75618670
Matt White	75618700

Required parts:	Code no.
iBox universal 2 Basic set	01500180

Measurements within scale drawings are in mm.
Technical specifications and units of measure are subject to change.

Tecturis E Single lever basin mixers Fine CoolStart

Features of all variants

- handle variant: lever handle
- spray type: WaterfallStream
- ceramic cartridge
- suitable for continuous flow water heaters
- connection type: G ⅜ connections
- connection dimension: DN15
- cold water in basic handle position
- EU taxonomy: max. 6 l/min - Substantial Contribution (SC) possible

110



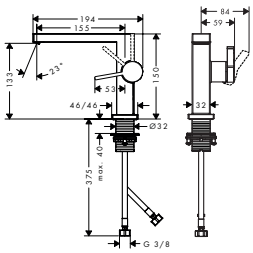

150



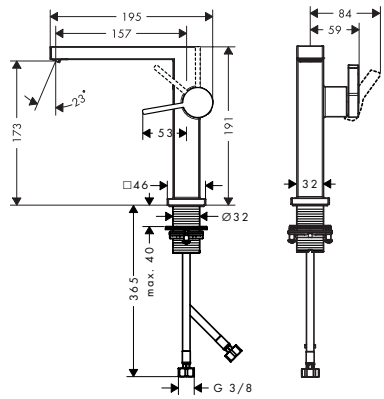

240



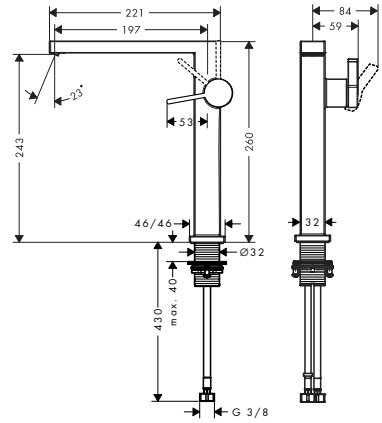

Sustainability

Eco Smart+ | EcoSmart | CoolStart

Technologies

AirPower | Comfort Zone

Overview variants

ComfortZone	Projection (mm)	Spout height (mm)	Waste set	Material waste set	CoolStart	For wash bowls	Max. flow rate at 3 bar (l/min)	Finish	Code no.
110	155	133	push-open	metal	■	–	4	Chrome	73020000
								Brushed Bronze	73020140
								Matt Black	73020670
								Matt White	73020700
110	155	133	pop-up	metal	■	–	4	Chrome	73023000
								Brushed Bronze	73023140
								Matt Black	73023670
								Matt White	73023700
110	155	133	without	–	■	–	4	Chrome	73021000
								Brushed Bronze	73021140
								Matt Black	73021670
								Matt White	73021700
110	155	133	push-open	metal	■	–	5	Chrome	73024000
								Brushed Bronze	73024140
								Matt Black	73024670
								Matt White	73024700
150	157	173	push-open	metal	■	–	4	Chrome	73040000
								Brushed Bronze	73040140
								Matt Black	73040670
								Matt White	73040700
150	157	173	without	–	■	–	4	Chrome	73041000
								Brushed Bronze	73041140
								Matt Black	73041670
								Matt White	73041700

Measurements within scale drawings are in mm.
Technical specifications and units of measure are subject to change.

Tecturis E Single lever basin mixers Fine CoolStart

Overview variants

ComfortZone	Projection (mm)	Spout height (mm)	Waste set	Material waste set	CoolStart	For wash bowls	Max. flow rate at 3 bar (l/min)	Finish	Code no.
150	157	173	push-open	metal	■	–	5	Chrome	73042000
								Brushed Bronze	73042140
								Matt Black	73042670
								Matt White	73042700
240	197	243	push-open	metal	■	■	4	Chrome	73070000
								Brushed Bronze	73070140
								Matt Black	73070670
								Matt White	73070700
240	197	243	without	–	■	■	4	Chrome	73072000
								Brushed Bronze	73072140
								Matt Black	73072670
								Matt White	73072700
240	197	243	push-open	metal	■	■	5	Chrome	73073000
								Brushed Bronze	73073140
								Matt Black	73073670
								Matt White	73073700

Tecturis E Single lever basin mixers with swivel spout

Features of all variants

- consists of: single lever basin mixer, waste set
- ComfortZone 210
- projection: 157 mm
- spout height: 211 mm
- handle variant: lever handle
- swivel range 120°
- spray type: WaterfallStream
- ceramic cartridge
- suitable for continuous flow water heaters
- push-open waste set G 1¼
- material waste set: metal
- connection type: G ⅜ connections
- connection dimension: DN15
- cold water in basic handle position
- EU taxonomy: max. 6 l/min - Substantial Contribution (SC) possible



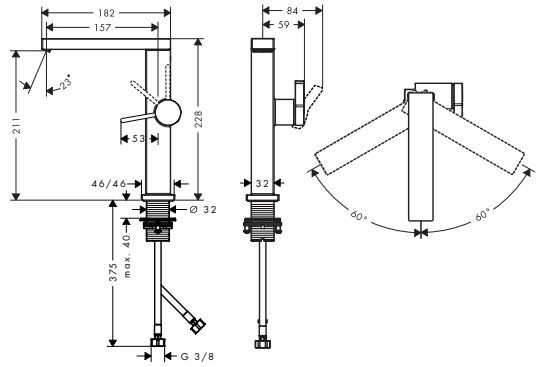

Sustainability

Eco Smart+ · EcoSmart · CoolStart

Technologies

AirPower · Comfort Zone

Overview variants

ComfortZone	Projection (mm)	Spout height (mm)	CoolStart	Max. flow rate at 3 bar (l/min)	Finish	Code no.
210	157	211	■	4	Chrome	73060000
					Brushed Bronze	73060140
					Matt Black	73060670
					Matt White	73060700
210	157	211	■	5	Chrome	73063000
					Brushed Bronze	73063140
					Matt Black	73063670
					Matt White	73063700

Measurements within scale drawings are in mm.
Technical specifications and units of measure are subject to change.

Tecturis E 2-hole basin mixer 150 CoolStart EcoSmart+ with waste set

Features

- consists of: 2-hole basin mixer, waste set
- ComfortZone 150
- projection: 158 mm
- spout height: 173 mm
- spray type: WaterfallStream
- maximum flow rate at 3 bar: 4 l/min
- Select cartridge with temperature control
- comfortable operation turning and pushing movement
- material control element: metal housing, safety glass
- suitable for continuous flow water heaters
- non-closing waste set
- material waste set: metal
- connection type: G ⅜ connections
- connection dimension: DN15
- flexible positioning of control element possible
- cold water in basic handle position
- no soiling of the outlet due to water spots
- quick connect hose
- EU taxonomy: max. 6 l/min - Substantial Contribution (SC) possible



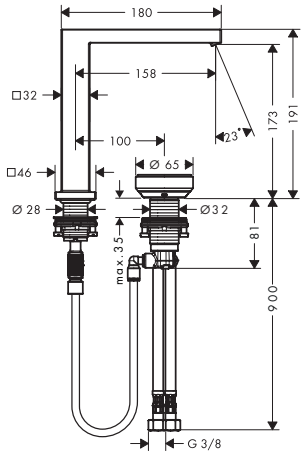

Sustainability

Eco Smart+ · CoolStart

Technologies

AirPower · Comfort Zone

Finish	Code no.
Chrome	73053000
Brushed Bronze	73053140
Matt Black	73053670
Matt White	73053700

Tecturis E 3-hole basin mixer 150 EcoSmart+ with push-open waste set

Features

- consists of: 3-hole basin mixer, waste set
- ComfortZone 150
- projection: 158 mm
- spout height: 173 mm
- handle variant: lever handle
- spray type: WaterfallStream
- maximum flow rate at 3 bar: 4 l/min
- ceramic cartridge
- suitable for continuous flow water heaters
- push-open waste set G 1¼
- material waste set: metal
- connection type: G ⅜ connections
- connection dimension: DN15
- EU taxonomy: max. 6 l/min - Substantial Contribution (SC) possible



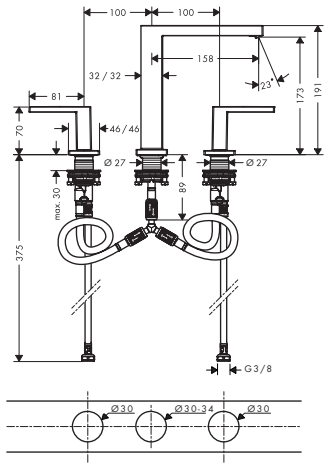

Sustainability

Eco Smart+

Technologies

AirPower · Comfort Zone

Finish	Code no.
Chrome	73030000
Brushed Bronze	73030140
Matt Black	73030670
Matt White	73030700

Measurements within scale drawings are in mm.
Technical specifications and units of measure are subject to change.

Tecturis E Single lever basin mixers

Features of all variants

- handle variant: lever handle
- spray type: WaterfallStream
- ceramic cartridge
- temperature limitation adjustable
- suitable for continuous flow water heaters
- connection type: G ⅜ connections
- connection dimension: DN15
- EU taxonomy: max. 6 l/min - Substantial Contribution (SC) possible

80



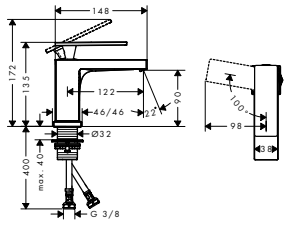

110



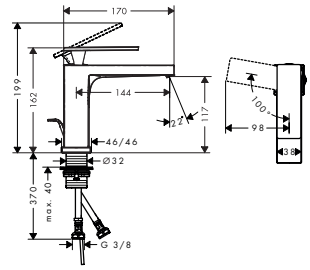

Sustainability

Eco Smart+ | EcoSmart | CoolStart

Technologies

AirPower | Comfort Zone

Overview variants

ComfortZone	Projection (mm)	Spout height (mm)	Waste set	Material waste set	CoolStart	Max. flow rate at 3 bar (l/min)	Finish	Code no.
80	122	90	pop-up	metal	■	4	Chrome	73002000
							Brushed Bronze	73002140
							Matt Black	73002670
							Matt White	73002700
80	122	90	without	–	■	4	Chrome	73001000
							Brushed Bronze	73001140
							Matt Black	73001670
							Matt White	73001700
80	122	90	pop-up	metal	■	5	Chrome	73004000
							Brushed Bronze	73004140
							Matt Black	73004670
							Matt White	73004700
110	144	117	pop-up	metal	■	4	Chrome	73014000
							Brushed Bronze	73014140
							Matt Black	73014670
							Matt White	73014700
110	144	117	without	–	■	4	Chrome	73012000
							Brushed Bronze	73012140
							Matt Black	73012670
							Matt White	73012700
110	144	117	pop-up	metal	–	4	Chrome	73010000
							Brushed Bronze	73010140
							Matt Black	73010670
							Matt White	73010700
110	144	117	without	–	–	4	Chrome	73011000
							Brushed Bronze	73011140
							Matt Black	73011670
							Matt White	73011700
110	144	117	pop-up	metal	■	5	Chrome	73018000
							Brushed Bronze	73018140
							Matt Black	73018670
							Matt White	73018700

For more information about this product, please see the next page.

Measurements within scale drawings are in mm.
Technical specifications and units of measure are subject to change.

Tecturis E Single lever basin mixers

Overview variants

ComfortZone	Projection (mm)	Spout height (mm)	Waste set	Material waste set	CoolStart	Max. flow rate at 3 bar (l/min)	Finish	Code no.
110	144	117	without	–	■	5	Chrome	73016000
							Brushed Bronze	73016140
							Matt Black	73016670
							Matt White	73016700

Tecturis E Single lever basin mixer 110 with bidette hand shower and shower hose 160 cm

Features

- consists of: single lever basin mixer, bidette hand shower, shower holder, shower hose
- ComfortZone 110
- projection: 144 mm
- spout height: 117 mm
- handle variant: lever handle
- spray type: WaterfallStream
- spray type Bidette: shower spray
- maximum flow rate at 3 bar: 5,8 l/min
- ceramic cartridge
- temperature limitation adjustable
- suitable for continuous flow water heaters
- push-open waste set G 1¼
- material waste set: metal
- connection type: G ⅜ connections
- connection dimension: DN15
- non-return valve
- EU taxonomy: max. 6 l/min - Substantial Contribution (SC) possible



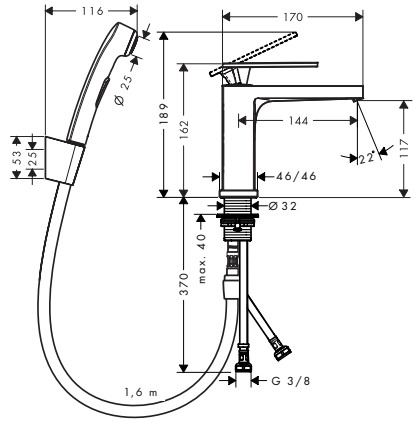

Sustainability

EcoSmart

Technologies

AirPower | Comfort Zone

Finish	Code no.
Chrome	73210000
Matt Black	73210670

Tecturis E Pillar tap 80 EcoSmart+ with lever handle for cold water or pre-adjusted water without waste set

Features

- ComfortZone 80
- projection: 122 mm
- spout height: 90 mm
- handle variant: lever handle
- spray type: WaterfallStream
- maximum flow rate at 3 bar: 4 l/min
- ceramic cartridge
- for cold water connection
- connection type: G ⅜ connections
- connection dimension: DN15
- EU taxonomy: max. 6 l/min - Substantial Contribution (SC) possible



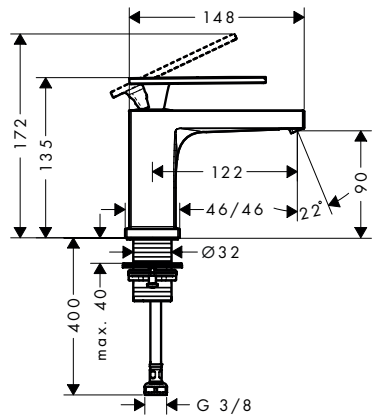

Sustainability

Eco Smart+

Technologies

AirPower | Comfort Zone

Finish	Code no.
Chrome	73013000
Brushed Bronze	73013140
Matt Black	73013670
Matt White	73013700

Measurements within scale drawings are in mm.
Technical specifications and units of measure are subject to change.

Tecturis E Single lever basin mixer for concealed installation wall-mounted EcoSmart+ with spout 22,5 cm

Features

- consists of: single lever basin mixer for concealed installation wall-mounted, waste set
- projection: 225 mm
- handle variant: lever handle
- spray type: WaterfallStream
- maximum flow rate at 3 bar: 4 l/min
- ceramic cartridge
- temperature limitation adjustable
- suitable for continuous flow water heaters
- non-closing waste set
- material waste set: metal
- connection type: basic set
- connection dimension: DN15
- handle can be positioned on the right or left, depending on the basic set installation
- EU taxonomy: max. 6 l/min - Substantial Contribution (SC) possible

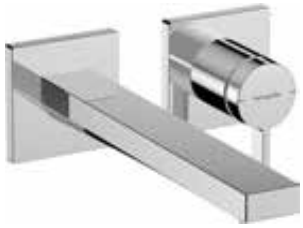

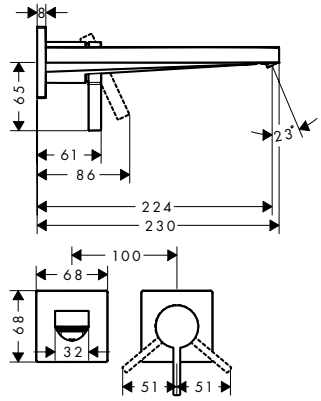

Sustainability

Technologies

Finish	Code no.
Chrome	73051000
Brushed Bronze	73051140
Matt Black	73051670
Matt White	73051700

Required parts:

	Code no.
Basic set for single lever basin mixer for concealed installation wall-mounted	13622180

Tecturis E Single lever bidet mixer with pop-up waste set

Features

- consists of: single lever bidet mixer, waste set
- projection: 130 mm
- spout height: 101 mm
- spray type: laminar spray
- maximum flow rate at 3 bar: 5 l/min
- ceramic cartridge
- temperature limitation adjustable
- suitable for continous flow water heaters
- pop-up waste set G 1¼
- material waste set: metal
- connection type: G ⅜ connections
- connection dimension: DN15



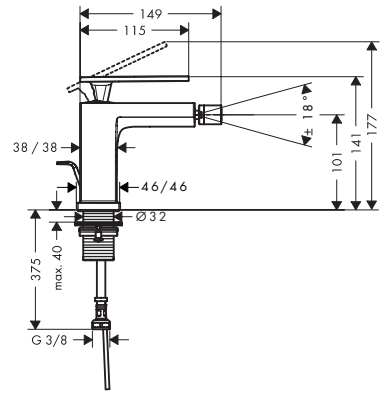

Finish	Code no.
Chrome	73200000
Brushed Bronze	73200140
Matt Black	73200670
Matt White	73200700

Measurements within scale drawings are in mm.
Technical specifications and units of measure are subject to change.

Tecturis E Single lever bath mixer floor-standing

Features

- consists of: single lever bath mixer floor standing, baton hand shower, shower hose, shower holder
- 2 functions
- projection: 264 mm
- spray type mixer: WaterfallStream
- spray type hand shower: PowderRain
- maximum flow rate at 3 bar: 23,5 l/min
- flow rate for bath spout at 3 bar: 23,5 l/min
- flow rate of hand shower at 3 bar: 8 l/min
- ceramic cartridge
- pressure diverter Select with automatic resetting
- connection dimension: DN15
- connection type: basic set
- deck mounted
- min. operating pressure: 1 bar
- max. operating pressure: 10 bar



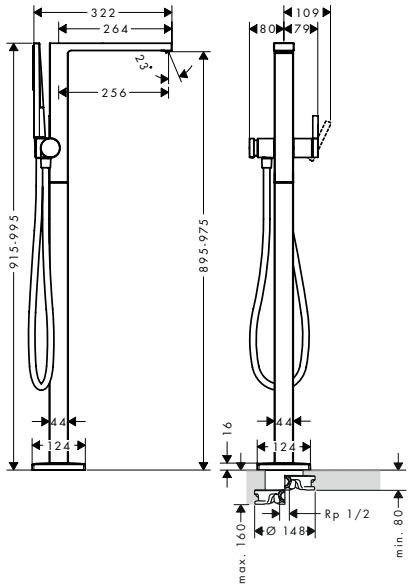

Technologies

Select, AirPower

Finish	Code no.
Chrome	73445000
Brushed Bronze	73445140
Matt Black	73445670
Matt White	73445700

Required parts:	Code no.
Basic set for mixers floor-standing	10452180

Optional parts:	Code no.
Sealing foil for basic set bath mixer floor-standing	96441000

Tecturis E Single lever bath mixer for exposed installation

Features

- 2 functions
- projection: 213 mm
- centre distance: 150 ± 12 mm
- spray type mixer: WaterfallStream
- flow rate for bath spout at 3 bar: 25 l/min
- flow rate of hand shower at 3 bar: 14,5 l/min
- ceramic cartridge
- temperature limitation adjustable
- pressure diverter Select with automatic resetting
- protected against backflow, according to DIN EN 1717
- with silencer
- suitable for continous flow water heaters
- connection dimension: DN15
- connection type: s-shaped connections
- wall-mounted
- min. operating pressure: 1 bar
- max. operating pressure: 10 bar



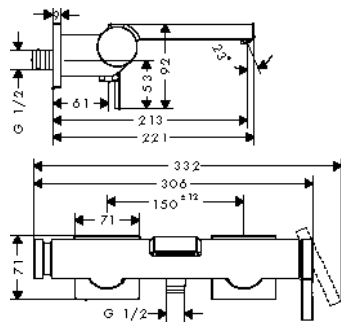

Technologies

Select, AirPower

Finish	Code no.
Chrome	73420000
Brushed Bronze	73420140
Matt Black	73420670
Matt White	73420700

Measurements within scale drawings are in mm.
Technical specifications and units of measure are subject to change.

DuoTurn E Mixer for concealed installation for 2 functions

Features

- 2 functions
- volume control and diverter for 2 functions
- maximum flow rate at 3 bar: 29,5 l/min
- flow rate upper outlet: 29,5 l/min
- flow rate lower outlet: 29,5 l/min
- ceramic cartridge for temperature control, shut-off/ diverter valve
- flat escutcheon for more space in the shower
- easy installation due to pre-assembled function block
- handles always at the same height regardless of the installation depth of the basic set
- escutcheon can be aligned by +/- 3°
- material escutcheon: plastic
- material handles: metal
- min. operating pressure: 1 bar
- max. operating pressure: 10 bar
- mixer is delivered with buttons Rain small, Rain large, hand sower, Waterfall, bath tub
- connection type: basic set iBox universal 2 (# 01500180)



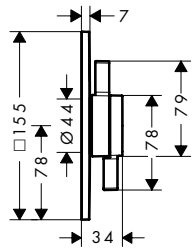

Sustainability

Water Flow Control

Finish	Code no.
Chrome	75417000
Brushed Bronze	75417140
Matt Black	75417670
Matt White	75417700

Required parts:	Code no.
iBox universal 2 Basic set	01500180

Tecturis E Bath spout

Features

- 1 function
- connection type: G ½
- projection: 210 mm
- wall-mounted
- maximum flow rate at 3 bar: 22 l/min
- connection dimension: DN15
- spray type: WaterfallStream



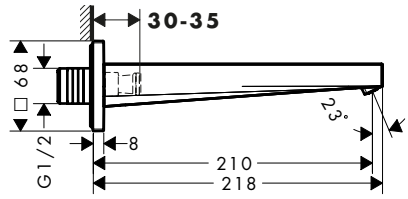

Technologies

AirPower

Finish	Code no.
Chrome	73410000
Brushed Bronze	73410140
Matt Black	73410670
Matt White	73410700

Optional parts:	Code no.
Socket for G1/2 connection	95626000

Measurements within scale drawings are in mm.
Technical specifications and units of measure are subject to change.

Tecturis E 3-hole rim mounted single lever bath mixer with sBox

Features

- consists of: 3-hole rim mounted single lever bath mixer, hand shower, shower holder, shower hose, hose box
- 2 functions
- projection: 206 mm
- spray type mixer: WaterfallStream
- spray type hand shower: PowderRain
- maximum pull-out length of hand shower: 1,45 m
- sBox for quiet, smooth and protected hose guidance
- maximum flow rate at 3 bar: 23 l/min
- ceramic cartridge
- diverter with automatic resetting
- non-return valve
- protected against backflow, according to DIN EN 1717
- suitable for continous flow water heaters
- connection dimension: DN15
- connection type: basic set
- installation on bath rim
- min. operating pressure: 1 bar
- max. operating pressure: 10 bar



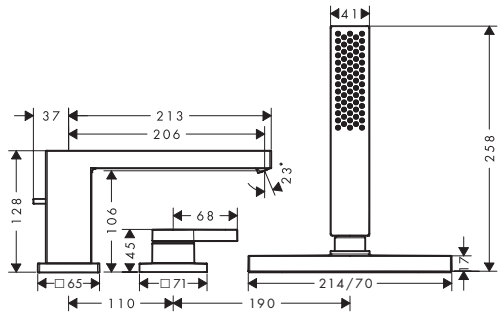

Technologies

AirPower

Finish	Code no.
Chrome	73443000
Brushed Bronze	73443140
Matt Black	73443670
Matt White	73443700

Required parts:

	Code no.
Basic set for 3-hole rim mounted single lever bath mixer	13481180

Tecturis E Single lever shower mixer for exposed installation

Features

- 1 function
- centre distance: 150 ± 12 mm
- maximum flow rate at 3 bar: 14,9 l/min
- ceramic cartridge
- temperature limitation adjustable
- non-return valve
- with silencer
- suitable for continous flow water heaters
- hose connection DN15
- connection dimension: DN15
- min. operating pressure: 1 bar
- max. operating pressure: 10 bar
- connection type: s-shaped connections



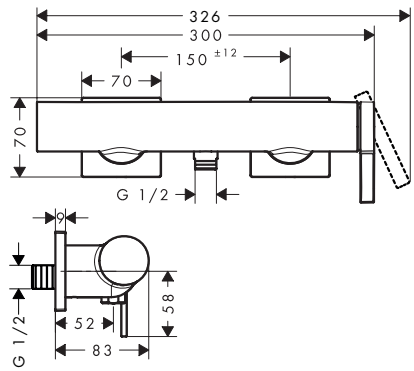

Finish	Code no.
Chrome	73620000
Brushed Bronze	73620140
Matt Black	73620670
Matt White	73620700

Measurements within scale drawings are in mm.
Technical specifications and units of measure are subject to change.

DuoTurn E Mixer for concealed installation for 1 function

Features

- 1 function
- volume control for 1 function
- maximum flow rate at 3 bar: 29,5 l/min
- ceramic cartridge for temperature control, 1/2" ceramic shut-off valve
- flat escutcheon for more space in the shower
- easy installation due to pre-assembled function block
- handles always at the same height regardless of the installation depth of the basic set
- escutcheon can be aligned by +/- 3°
- material escutcheon: plastic
- material handles: metal
- min. operating pressure: 1 bar
- max. operating pressure: 10 bar
- mixer is delivered with button hand shower
- connection type: basic set iBox universal 2 (# 01500180)



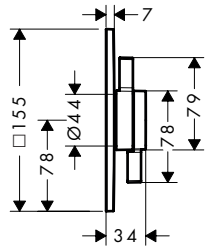

Sustainability

Water Flow Control

Finish	Code no.
Chrome	75617000
Brushed Bronze	75617140
Matt Black	75617670
Matt White	75617700

Required parts:	Code no.
iBox universal 2 Basic set	01500180

Measurements within scale drawings are in mm.
Technical specifications and units of measure are subject to change.



Vivenis

Vivenis Single lever basin mixers

Features of all variants

- handle variant: lever handle
- spray type: WaterfallStream
- maximum flow rate at 3 bar: 5 l/min
- ceramic cartridge
- temperature limitation adjustable
- suitable for continuous flow water heaters
- connection type: G ⅜ connections
- connection dimension: DN15
- EU taxonomy: max. 6 l/min - Substantial Contribution (SC) possible

80



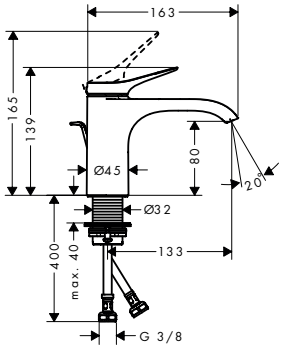

110



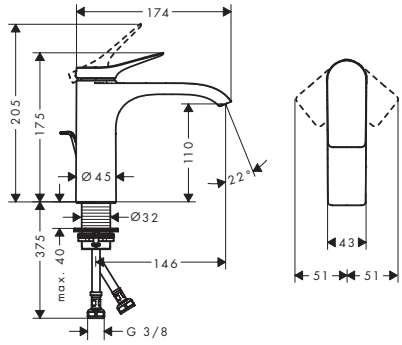

250



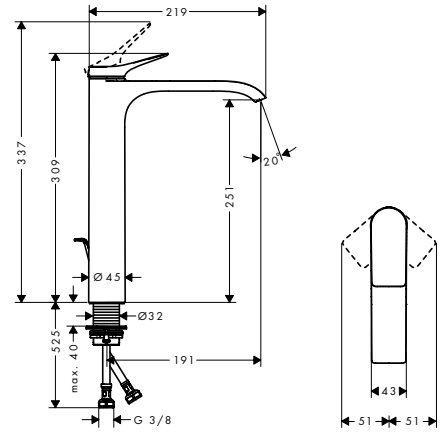

Sustainability

EcoSmart, CoolStart

Technologies

AirPower, Comfort Zone

Overview variants

ComfortZone	Projection (mm)	Spout height (mm)	Waste set	Material waste set	CoolStart	For wash bowls	Finish	Code no.
80	133	80	pop-up	metal	–	–	Chrome	75010000
							Matt Black	75010670
							Matt White	75010700
80	133	80	without	–	–	–	Chrome	75012000
							Matt Black	75012670
							Matt White	75012700
110	146	110	pop-up	metal	■	–	Chrome	75023000
							Matt Black	75023670
							Matt White	75023700
110	146	110	without	–	■	–	Chrome	75024000
							Matt Black	75024670
							Matt White	75024700
110	146	110	pop-up	metal	–	–	Chrome	75020000
							Matt Black	75020670
							Matt White	75020700
110	146	110	without	–	–	–	Chrome	75022000
							Matt Black	75022670
							Matt White	75022700
250	191	251	pop-up	metal	–	■	Chrome	75040000
							Matt Black	75040670
							Matt White	75040700

Measurements within scale drawings are in mm.
Technical specifications and units of measure are subject to change.

Vivenis Single lever basin mixers

Overview variants

ComfortZone	Projection (mm)	Spout height (mm)	Waste set	Material waste set	CoolStart	For wash bowls	Finish	Code no.
250	191	251	without	–	–	■	Chrome	75042000
							Matt Black	75042670
							Matt White	75042700

Vivenis Single lever basin mixers with swivel spout

Features of all variants

- ComfortZone 210
- projection: 139 mm
- spout height: 209 mm
- handle variant: lever handle
- swivel range 120°
- spray type: WaterfallStream
- maximum flow rate at 3 bar: 5 l/min
- ceramic cartridge
- temperature limitation adjustable
- suitable for continuous flow water heaters
- connection type: G ⅜ connections
- connection dimension: DN15
- EU taxonomy: max. 6 l/min - Substantial Contribution (SC) possible



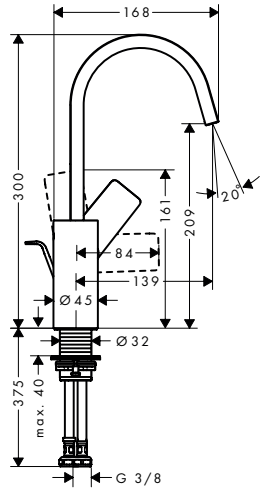

Sustainability

EcoSmart

Technologies

AirPower | Comfort Zone

Overview variants

ComfortZone	Projection (mm)	Spout height (mm)	Waste set	Material waste set	Finish	Code no.
210	139	209	pop-up	metal	Chrome	75030000
					Matt Black	75030670
					Matt White	75030700
210	139	209	without	–	Chrome	75032000
					Matt Black	75032670
					Matt White	75032700

Measurements within scale drawings are in mm.
Technical specifications and units of measure are subject to change.

Vivenis Pillar tap 80 with lever handle for cold water or pre-adjusted water without waste set

Features

- ComfortZone 80
- projection: 133 mm
- spout height: 94 mm
- handle variant: lever handle
- spray type: WaterfallStream
- maximum flow rate at 3 bar: 5 l/min
- ceramic cartridge
- for cold water connection
- connection type: G ⅜ connection hose
- connection dimension: DN15
- EU taxonomy: max. 6 l/min - Substantial Contribution (SC) possible



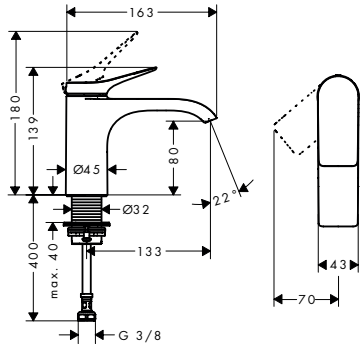

Sustainability

EcoSmart

Technologies

AirPower Comfort Zone

Finish	Code no.
Chrome	75013000
Matt Black	75013670
Matt White	75013700

Vivenis 3-hole basin mixers

Features of all variants

- consists of: 3-hole basin mixer, waste set
- ComfortZone 90
- spout height: 91 mm
- spray type: WaterfallStream
- ceramic valves hot/cold 90°
- suitable for continuous flow water heaters
- pop-up waste set G 1¼
- material waste set: metal
- connection dimension: DN15

90



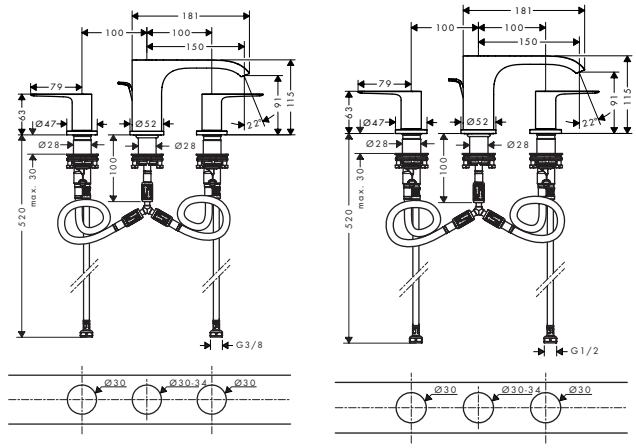

Sustainability

EcoSmart

Technologies

AirPower Comfort Zone

Overview variants

Finish	Code no.
Chrome	75033000
Matt Black	75033670
Matt White	75033700
Chrome	75033007

Measurements within scale drawings are in mm.
Technical specifications and units of measure are subject to change.

Vivenis Single lever basin mixers for concealed installation wall-mounted

Features of all variants

- consists of: single lever basin mixer for concealed installation wall-mounted, waste set
- projection: 192 mm
- handle variant: lever handle
- spray type: WaterfallStream
- ceramic cartridge
- temperature limitation adjustable
- suitable for continuous flow water heaters
- non-closing waste set
- material waste set: metal
- connection type: basic set
- connection dimension: DN15
- handle can be positioned on the right or left, depending on the basic set installation

192



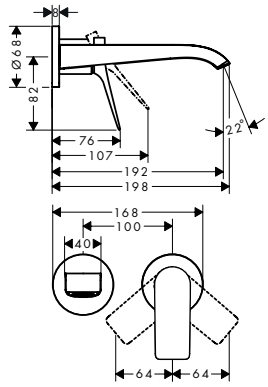

Sustainability

EcoSmart

Technologies

AirPower

Overview variants

Finish	Code no.
Chrome	75050000
Matt Black	75050670
Matt White	75050700
Chrome	75050007

Required parts: Code no.



Basic set for single lever basin mixer for concealed installation wall-mounted — 13622180

Vivenis Single lever bidet mixer with pop-up waste set

Features

- consists of: single lever bidet mixer, waste set
- projection: 130 mm
- spout height: 81 mm
- ball-pivot joint
- spray type: laminar spray
- maximum flow rate at 3 bar: 7,5 l/min
- ceramic cartridge
- temperature limitation adjustable
- suitable for continous flow water heaters
- pop-up waste set G 1¼
- material waste set: metal
- connection type: G ⅜ connections
- connection dimension: DN15



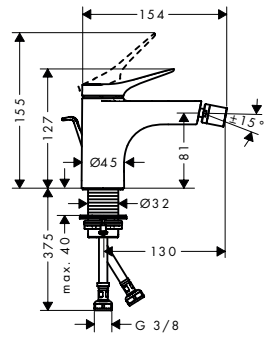

Finish	Code no.
Chrome	75200000
Matt Black	75200670
Matt White	75200700

Vivenis Single lever bath mixer floor-standing

Features

- consists of: single lever bath mixer floor standing, baton hand shower, shower hose, shower holder
- 2 functions
- projection: 236 mm
- spray type mixer: WaterfallStream
- spray type hand shower: Rain, Mono
- maximum flow rate at 3 bar: 21,3 l/min
- flow rate for bath spout at 3 bar: 21,3 l/min
- flow rate of hand shower at 3 bar: 13,4 l/min
- ceramic cartridge
- temperature limitation adjustable
- diverter with automatic resetting
- non-return valve
- connection dimension: DN15
- connection type: basic set
- deck mounted
- min. operating pressure: 1 bar
- max. operating pressure: 10 bar



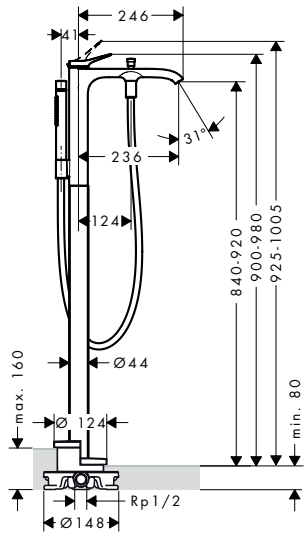

Technologies

AirPower

Spray types

Rain Mono

Finish	Code no.
Chrome	75445000
Matt Black	75445670
Matt White	75445700

Consisting of:	Included in	Code no.
Isiflex Shower hose 125 cm	75445XXX	28272XXX

Required parts:	Code no.
Basic set for mixers floor-standing	10452180

Optional parts:	Code no.
Sealing foil for basic set bath mixer floor-standing	96441000

Vivenis Single lever bath mixer for exposed installation

Features

- 2 functions
- projection: 216 mm
- centre distance: 150 ± 12 mm
- spray type mixer: WaterfallStream
- maximum flow rate at 3 bar: 19,4 l/min
- flow rate for bath spout at 3 bar: 19,4 l/min
- ceramic cartridge
- temperature limitation adjustable
- pressure diverter Select with automatic resetting
- protected against backflow, according to DIN EN 1717
- with silencer
- suitable for continous flow water heaters
- connection dimension: DN15
- connection type: s-shaped connections
- wall-mounted
- min. operating pressure: 1 bar
- max. operating pressure: 10 bar



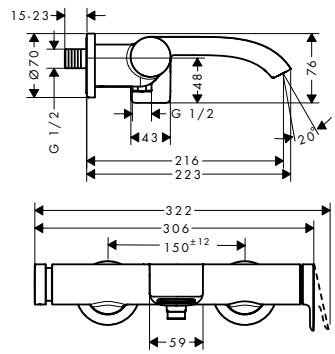

Technologies

Select AirPower

Finish	Code no.
Chrome	75420000
Matt Black	75420670
Matt White	75420700

Measurements within scale drawings are in mm.
Technical specifications and units of measure are subject to change.

Vivenis Single lever bath mixer for concealed installation for iBox universal

Features

- 2 functions
- flow rate upper outlet: 21 l/min
- flow rate lower outlet: 29 l/min
- maximum flow rate at 3 bar: 29 l/min
- ceramic cartridge
- temperature limitation adjustable
- diverter with automatic resetting
- with silencer
- connection type: basic set
- wall-mounted
- min. operating pressure: 1 bar
- max. operating pressure: 10 bar



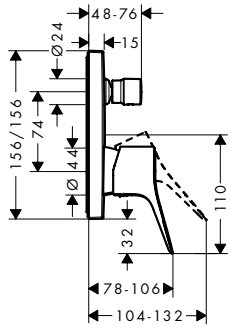

Finish	Code no.
Chrome	75415000
Matt Black	75415670
Matt White	75415700

Required parts (choose one):			Code no.
Option 1		iBox universal 2 Basic set	01500180
+		Adapter plate for iBox universal 2	13588000
Option 2		iBox universal Basic set	01800180

Vivenis Bath spout

Features

- 1 function
- connection type: G ½
- with escutcheon
- projection: 202 mm
- wall-mounted
- maximum flow rate at 3 bar: 24,3 l/min
- spray type: WaterfallStream



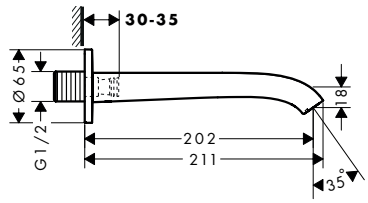

Technologies

AirPower

Finish	Code no.
Chrome	75410000
Matt Black	75410670
Matt White	75410700

Optional parts:		Code no.
	Connecting thread G ¾	92504000

Measurements within scale drawings are in mm.
Technical specifications and units of measure are subject to change.

Vivenis 4-hole rim mounted bath mixer

Features

- consists of: 4-hole rim mounted bath mixer, hand shower, shower holder
- 2 functions
- spray type mixer: WaterfallStream
- spray type hand shower: PowderRain
- maximum pull-out length of hand shower: 1,45 m
- maximum flow rate at 3 bar: 24 l/min
- flow rate for bath spout at 3 bar: 24 l/min
- flow rate of hand shower at 3 bar: 8 l/min
- ceramic valves hot/cold 90°
- connection dimension: DN15
- connection type: basic set
- installation on bath rim
- min. operating pressure: 1 bar
- max. operating pressure: 10 bar



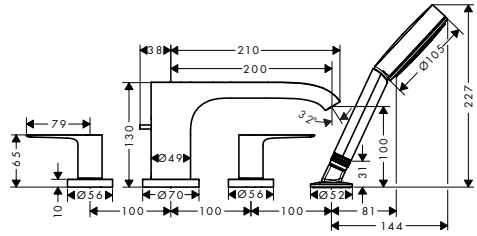

Technologies

AirPower

Finish	Code no.
Chrome	75443007

Vivenis 4-hole rim mounted bath mixer with sBox

Features

- consists of: 4-hole rim mounted bath mixer, hand shower, shower holder, shower hose, hose box
- 2 functions
- spray type mixer: WaterfallStream
- spray type hand shower: PowderRain
- maximum pull-out length of hand shower: 1,45 m
- sBox for quiet, smooth and protected hose guidance
- maximum flow rate at 3 bar: 23,9 l/min
- flow rate for bath spout at 3 bar: 23,9 l/min
- flow rate of hand shower at 3 bar: 10,5 l/min
- ceramic valves hot/cold 90°
- non-return valve
- connection dimension: DN15
- connection type: basic set
- installation on bath rim
- min. operating pressure: 1 bar
- max. operating pressure: 10 bar



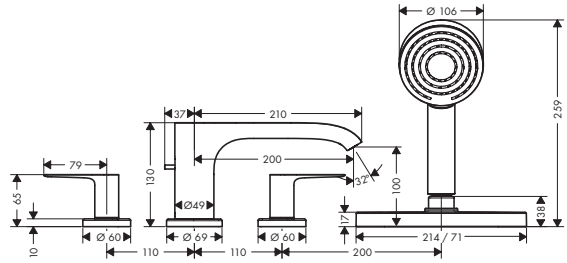

Technologies

AirPower

Finish	Code no.
Chrome	75444000
Matt Black	75444670
Matt White	75444700

Consisting of:		Included in	Code no.
	Pulsify S Hand shower 105 1jet	75444XXX	24120XXX
	sBox Finish set oval	75444XXX	28020XXX

Required parts:		Code no.
	Basic set for 4-hole rim mounted bath mixer	13440180

Measurements within scale drawings are in mm.
Technical specifications and units of measure are subject to change.

Vivenis Single lever shower mixer for exposed installation

Features

- 1 function
- centre distance: 150 ± 12 mm
- maximum flow rate at 3 bar: 12,3 l/min
- ceramic cartridge
- temperature limitation adjustable
- non-return valve
- with silencer
- hose connection DN15
- connection dimension: DN15
- min. operating pressure: 1 bar
- max. operating pressure: 10 bar
- connection type: s-shaped connections



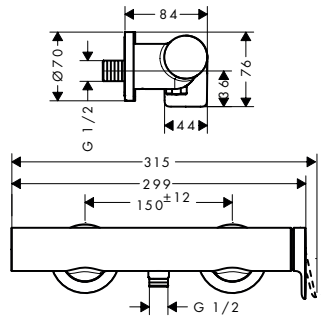

Finish	Code no.
Chrome	75620000
Matt Black	75620670
Matt White	75620700

Vivenis Single lever shower mixer for concealed installation for iBox universal

Features

- 1 function
- maximum flow rate at 3 bar: 29,3 l/min
- ceramic cartridge
- temperature limitation adjustable
- with silencer
- min. operating pressure: 1 bar
- max. operating pressure: 10 bar
- connection type: basic set



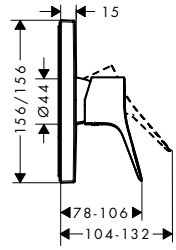

Finish	Code no.
Chrome	75615000
Matt Black	75615670
Matt White	75615700

Required parts (choose one):			Code no.
Option 1		iBox universal 2 Basic set	01500180
+		Adapter plate for iBox universal 2	13588000
Option 2		iBox universal Basic set	01800180

Measurements within scale drawings are in mm.
Technical specifications and units of measure are subject to change.



Talis

Talis Select S Basin mixers

Features of all variants

- handle variant: pin handle
- spray type: normal spray
- maximum flow rate at 3 bar: 5 l/min
- Select cartridge with temperature control
- temperature limitation adjustable
- suitable for continuous flow water heaters
- connection type: G ⅜ connections
- connection dimension: DN15
- EU taxonomy: max. 6 l/min - Substantial Contribution (SC) possible

80



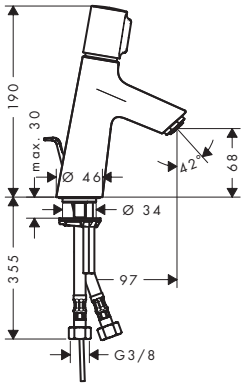

100



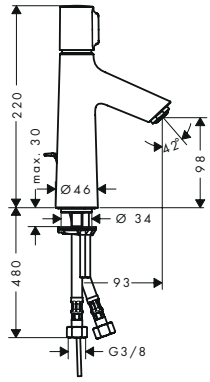

190



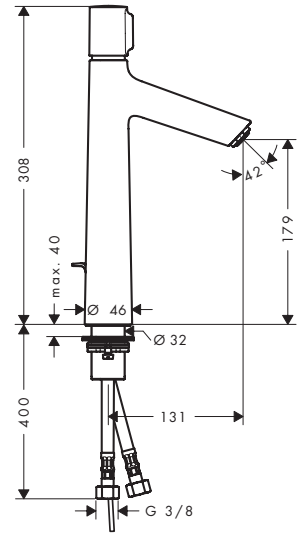

Sustainability

EcoSmart

Technologies

Select | AirPower | Comfort Zone | Quick Clean

Certificates/declarations

EPD

Overview variants

ComfortZone	Projection (mm)	Spout height (mm)	Waste set	Material waste set	Finish	Code no.
80	97	68	pop-up	metal	Chrome	72040000
80	97	68	without	–	Chrome	72041000
100	93	98	pop-up	metal	Chrome	72042000
100	93	98	without	–	Chrome	72043000
190	131	179	pop-up	metal	Chrome	72044000
190	131	179	without	–	Chrome	72045000

Measurements within scale drawings are in mm.
Technical specifications and units of measure are subject to change.

Talis S Single lever basin mixers

Features of all variants

- handle variant: pin handle
- spray type: normal spray
- maximum flow rate at 3 bar: 5 l/min
- ceramic cartridge
- temperature limitation adjustable
- suitable for continuous flow water heaters
- connection type: G ⅜ connections
- connection dimension: DN15
- EU taxonomy: max. 6 l/min - Substantial Contribution (SC) possible

80



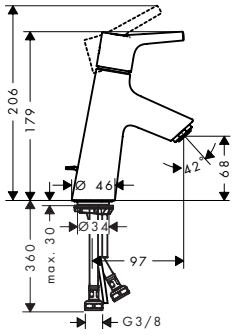

100



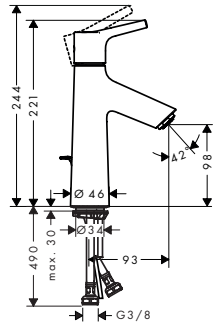

190



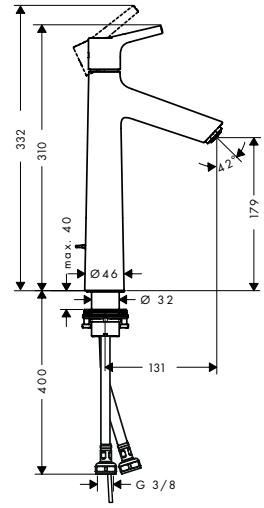

Sustainability

EcoSmart, CoolStart

Technologies

AirPower, Comfort Zone, Quick Clean

Certificates/declarations

EPD

Overview variants

ComfortZone	Projection (mm)	Spout height (mm)	Waste set	Material waste set	CoolStart	Finish	Code no.
80	97	68	pop-up	metal	■	Chrome	72013000
80	97	68	without	–	■	Chrome	72014000
80	97	68	pop-up	metal	–	Chrome	72010000
80	97	68	push-open	metal	–	Chrome	72011000
80	97	68	without	–	–	Chrome	72012000
100	93	98	pop-up	metal	■	Chrome	72022000
100	93	98	without	–	■	Chrome	72023000
100	93	98	pop-up	metal	–	Chrome	72020000
100	93	98	without	–	–	Chrome	72021000
190	131	179	pop-up	metal	–	Chrome	72031000
190	131	179	without	–	–	Chrome	72032000

Measurements within scale drawings are in mm.
Technical specifications and units of measure are subject to change.

Talis S Single lever basin mixer 100 LowFlow without waste set

Features

- ComfortZone 100
- projection: 93 mm
- spout height: 98 mm
- handle variant: pin handle
- spray type: normal spray
- maximum flow rate at 3 bar: 2,7 l/min
- ceramic cartridge
- temperature limitation adjustable
- suitable for continuous flow water heaters
- connection type: G ⅜ connections
- connection dimension: DN15



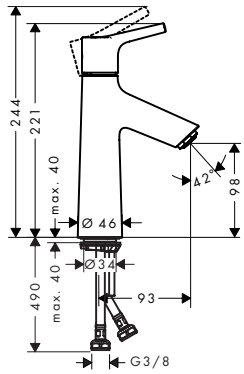

Sustainability

EcoSmart

Technologies

AirPower | Comfort Zone | Quick Clean

Finish	Code no.
Chrome	72025000

Talis S Single lever basin mixers

Features of all variants

- handle variant: pin handle
- spray type: normal spray
- maximum flow rate at 3 bar: 5 l/min
- ceramic cartridge
- temperature limitation adjustable
- suitable for continuous flow water heaters
- connection type: G ⅜ connections
- connection dimension: DN15
- EU taxonomy: max. 6 l/min - Substantial Contribution (SC) possible

140



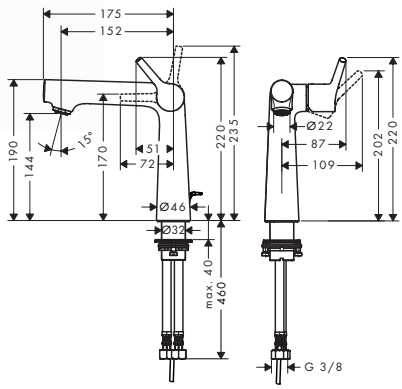

250

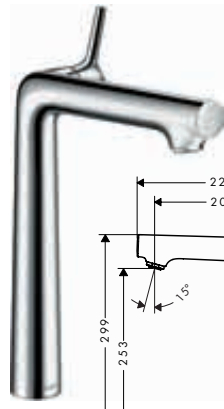

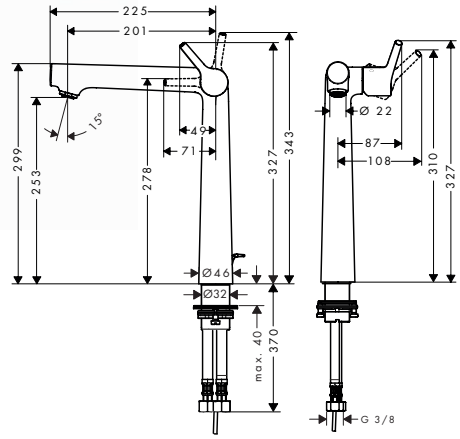

Sustainability

EcoSmart

Technologies

AirPower | Comfort Zone | Quick Clean

Overview variants

ComfortZone	Projection (mm)	Spout height (mm)	Waste set	Material waste set	For wash bowls	Finish	Code no.
140	152	144	pop-up	metal	–	Chrome	72113000
250	201	253	without	–	■	Chrome	72116000

Measurements within scale drawings are in mm.
Technical specifications and units of measure are subject to change.

Talis S Single lever basin mixer 210 with swivel spout and pop-up waste set

Features

- consists of: single lever basin mixer, waste set
- ComfortZone 210
- projection: 162 mm
- spout height: 227 mm
- handle variant: pin handle
- swivel range 120°
- spray type: normal spray
- maximum flow rate at 3 bar: 5 l/min
- ceramic cartridge
- temperature limitation adjustable
- suitable for continuous flow water heaters
- pop-up waste set G 1¼
- material waste set: metal
- connection type: G ⅜ connections
- connection dimension: DN15
- EU taxonomy: max. 6 l/min - Substantial Contribution (SC) possible



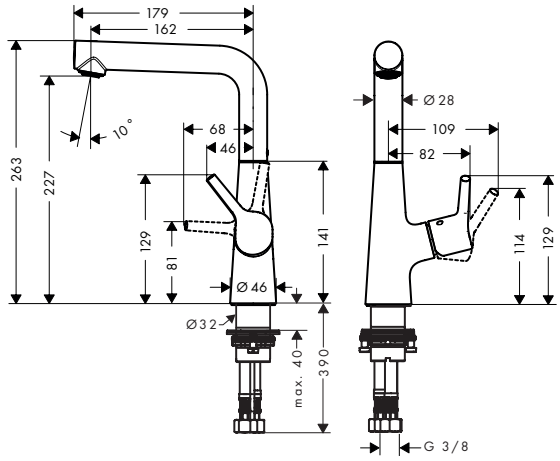

Sustainability

Technologies

Certificates/declarations

Finish	Code no.
Chrome	72105000

Talis S Pillar tap 80 with pin handle for cold water or pre-adjusted water without waste set

Features

- ComfortZone 80
- projection: 97 mm
- spout height: 68 mm
- handle variant: pin handle
- spray type: normal spray
- maximum flow rate at 3 bar: 5 l/min
- ceramic cartridge
- for cold water connection
- connection type: G ⅜ connection hose
- connection dimension: DN15
- EU taxonomy: max. 6 l/min - Substantial Contribution (SC) possible



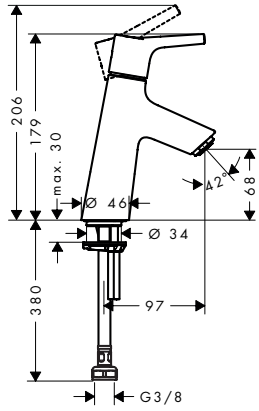

Sustainability

Technologies

Certificates/declarations

Finish	Code no.
Chrome	72017000

Measurements within scale drawings are in mm.
Technical specifications and units of measure are subject to change.

Talis S Single lever basin mixers for concealed installation wall-mounted

Features of all variants

- consists of: single lever basin mixer for concealed installation wall-mounted, waste set
- handle variant: lever handle
- spray type: normal spray
- maximum flow rate at 3 bar: 5 l/min
- ceramic cartridge
- temperature limitation adjustable
- suitable for continuous flow water heaters
- non-closing waste set
- material waste set: metal
- connection type: basic set
- connection dimension: DN15
- EU taxonomy: max. 6 l/min - Substantial Contribution (SC) possible

165



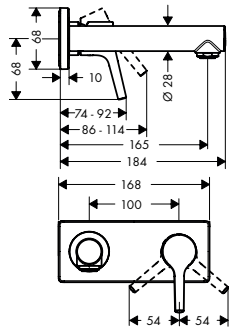

225



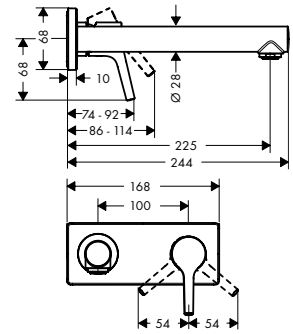

Sustainability

EcoSmart

Technologies

AirPower Quick Clean

Certificates/declarations

EPD

Overview variants

	Projection (mm)	Finish	Code no.
	165	Chrome	72110000
	225	Chrome	72111000

Required parts: Code no.



Basic set for single lever basin mixer for concealed installation wall-mounted 13622180

Talis S Single lever bidet mixer with pop-up waste set

Features

- consists of: single lever bidet mixer, waste set
- projection: 109 mm
- spout height: 100 mm
- aerator with ball pivot
- spray type: normal spray
- maximum flow rate at 3 bar: 5 l/min
- ceramic cartridge
- temperature limitation adjustable
- suitable for continous flow water heaters
- material waste set: metal
- connection type: G ⅜ connections
- connection dimension: DN15
- EU taxonomy: max. 6 l/min - Substantial Contribution (SC) possible



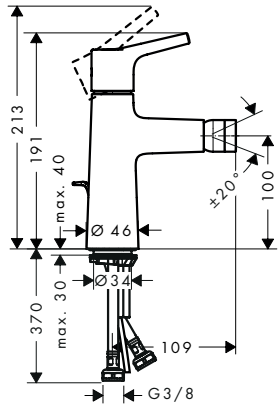

Sustainability

EcoSmart

Technologies

AirPower Quick Clean

Certificates/declarations

EPD

Finish	Code no.
Chrome	72200000

Measurements within scale drawings are in mm.
Technical specifications and units of measure are subject to change.

Talis S Single lever basin mixer with bidette hand shower and shower hose 160 cm

Features

- consists of: single lever basin mixer, bidette hand shower, shower holder, shower hose, waste set
- ComfortZone 100
- projection: 93 mm
- spout height: 98 mm
- handle variant: lever handle
- maximum flow rate at 3 bar: 5,7 l/min
- ceramic cartridge
- temperature limitation adjustable
- suitable for continuous flow water heaters
- push-open waste set G 1¼
- material waste set: synthetic
- connection type: G ⅜ connections
- connection dimension: DN15
- EU taxonomy: max. 6 l/min - Substantial Contribution (SC) possible



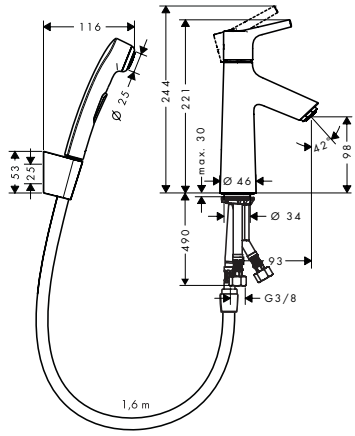

Sustainability

EcoSmart

Technologies

AirPower · Comfort Zone · Quick Clean

Certificates/declarations

EPD

Finish	Code no.
Chrome	72290000

Talis S Single lever bath mixer floor-standing

Features

- consists of: single lever bath mixer floor standing, baton hand shower, shower hose, shower holder
- 2 functions
- projection: 245 mm
- spray type mixer: normal spray
- spray type hand shower: Rain, MonoRain
- maximum flow rate at 3 bar: 20 l/min
- flow rate for bath spout at 3 bar: 21,8 l/min
- flow rate of hand shower at 3 bar: 14,8 l/min
- ceramic cartridge
- diverter with automatic resetting
- non-return valve
- connection dimension: DN15
- connection type: basic set
- deck mounted



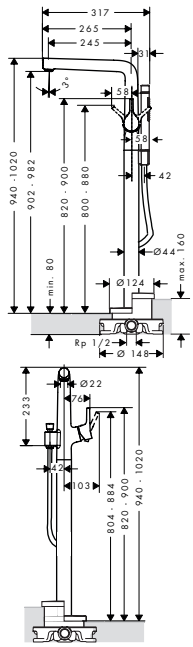

Technologies

AirPower · Quick Clean

Spray types

Rain · Mono Rain

Certificates/declarations

EPD

Finish	Code no.
Chrome	72412000

Required parts:	Code no.
Basic set for mixers floor-standing	10452180

Optional parts:	Code no.
Sealing foil for basic set bath mixer floor-standing	96441000

Measurements within scale drawings are in mm.
Technical specifications and units of measure are subject to change.

Talis S Single lever bath mixers for exposed installation

Features of all variants

- 2 functions
- projection: 166 mm
- spray type mixer: normal spray
- ceramic cartridge
- temperature limitation adjustable
- diverter with automatic resetting
- protected against backflow, according to DIN EN 1717
- with silencer
- suitable for continous flow water heaters
- connection dimension: DN15
- wall-mounted
- min. operating pressure: 1 bar
- max. operating pressure: 10 bar



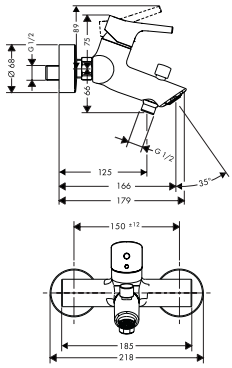



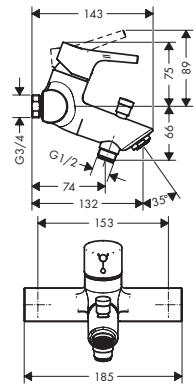

Technologies

AirPower · Quick Clean

Certificates/declarations

EPD

Overview variants

	Centre distance (mm)	Finish	Code no.
	150 ± 12	Chrome	72400000
	153	Chrome	72401000

Talis S Single lever bath mixers for concealed installation for iBox universal

Features of all variants

- 2 functions
- ceramic cartridge
- temperature limitation adjustable
- diverter with automatic resetting
- with silencer
- connection type: basic set
- min. operating pressure: 1 bar
- max. operating pressure: 10 bar



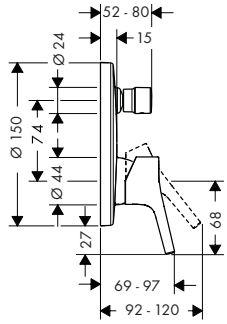

Certificates/declarations

EPD

Overview variants

Security combination EN 1717	Max. flow rate at 3 bar (l/min)	Finish	Code no.
–	29	Chrome	72405000
■	25	Chrome	72406000

Required parts (choose one):			Code no.
Option 1		iBox universal 2 Basic set	01500180
+		Adapter plate for iBox universal 2	13588000
Option 2		iBox universal Basic set	01800180

Measurements within scale drawings are in mm.
Technical specifications and units of measure are subject to change.

Talis S Bath spout

Features

- 1 function
- connection type: G ¾
- with silencer
- with escutcheon
- projection: 175 mm
- wall-mounted
- maximum flow rate at 3 bar: 21,5 l/min
- connection dimension: DN20
- spray type: normal spray



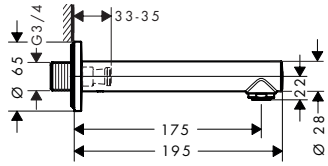

Technologies

AirPower · Quick Clean

Finish	Code no.
Chrome	72410000

Optional parts:	Code no.
 Socket for G1/2 connection	95626000

Talis S 3-hole rim mounted single lever bath mixer for Secuflex

Features

- consists of: 3-hole rim mounted single lever bath mixer, hand shower, shower holder
- 2 functions
- projection: 200 mm
- spray type mixer: normal spray
- spray type hand shower: Rain
- maximum pull-out length of hand shower: 1.10 m
- maximum flow rate at 3 bar: 18 l/min
- flow rate of hand shower at 3 bar: 15,1 l/min
- ceramic cartridge
- temperature limitation adjustable
- connection dimension: DN15
- installation on bath rim
- min. operating pressure: 1 bar
- max. operating pressure: 10 bar



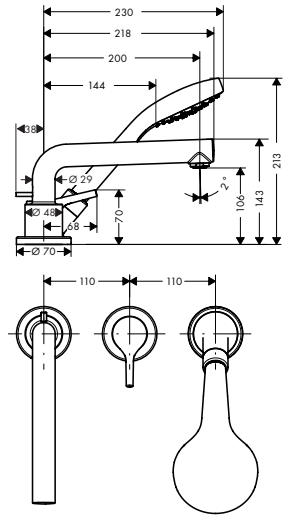

Technologies

AirPower · Quick Clean

Spray types

Rain

Finish	Code no.
Chrome	72416000

Consisting of:	Included in	Code no.
 Croma S Hand shower 110 1jet	72416000	26804400

Required parts:	Code no.
 Basic set for 3-hole rim mounted single lever bath mixer	13437180

Measurements within scale drawings are in mm.
Technical specifications and units of measure are subject to change.

Talis S 3-hole rim mounted single lever bath mixer

Features

- consists of: 3-hole rim mounted single lever bath mixer, hand shower, shower holder
- 2 functions
- projection: 200 mm
- spray type mixer: normal spray
- spray type hand shower: Rain
- maximum pull-out length of hand shower: 1.60 m
- maximum flow rate at 3 bar: 19 l/min
- flow rate for bath spout at 3 bar: 19 l/min
- flow rate of hand shower at 3 bar: 15 l/min
- ceramic cartridge
- temperature limitation adjustable
- connection dimension: DN15
- installation on bath rim
- min. operating pressure: 1 bar
- max. operating pressure: 10 bar



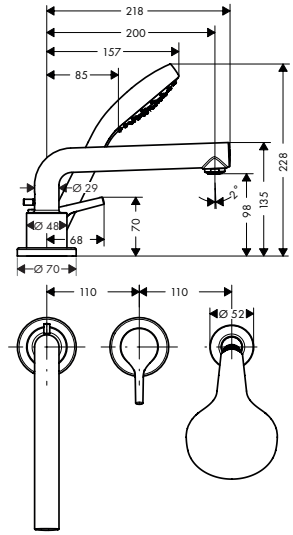

Technologies

AirPower, Quick Clean

Spray types

Rain

Finish	Code no.
Chrome	72417000

Consisting of:	Included in	Code no.
Croma S Hand shower 110 1jet	72417000	26804400

Required parts:	Code no.
Basic set for 3-hole rim mounted single lever bath mixer	13439180

Talis S 4-hole rim mounted bath mixer

Features

- consists of: 4-hole rim mounted bath mixer, hand shower, shower holder
- 2 functions
- projection: 200 mm
- maximum pull-out length of hand shower: 1.60 m
- maximum flow rate at 3 bar: 23,8 l/min
- flow rate for bath spout at 3 bar: 23,8 l/min
- flow rate of hand shower at 3 bar: 16,7 l/min
- non-return valve
- protected against backflow, according to DIN EN 1717
- connection dimension: DN15
- installation on bath rim
- min. operating pressure: 1 bar
- max. operating pressure: 10 bar



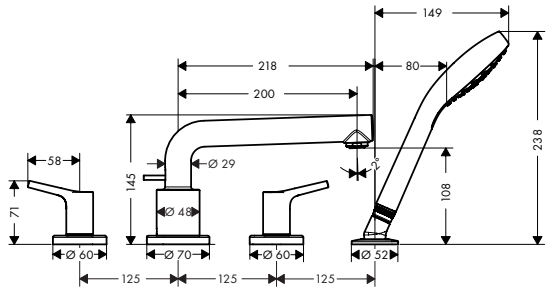

Technologies

AirPower, Quick Clean

Finish	Code no.
Chrome	72419000

Consisting of:	Included in	Code no.
Croma S Hand shower 110 1jet	72419000	26804400

Required parts:	Code no.
Basic set for 4-hole rim mounted bath mixer	13244180

Measurements within scale drawings are in mm.
Technical specifications and units of measure are subject to change.

Talis S Single lever shower mixer for exposed installation

Features

- 1 function
- centre distance: 150 ± 12 mm
- maximum flow rate at 3 bar: 31 l/min
- flow rate of hand shower at 3 bar: 14 l/min
- ceramic cartridge
- temperature limitation adjustable
- non-return valve
- with silencer
- hose connection DN15
- connection dimension: DN15
- min. operating pressure: 1 bar
- max. operating pressure: 10 bar
- connection type: s-shaped connections



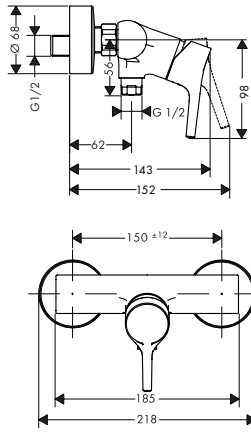

Certificates/declarations

EPD

Finish	Code no.
Chrome	72600000

Talis S Single lever shower mixer for concealed installation for iBox universal

Features

- 1 function
- maximum flow rate at 3 bar: 29,3 l/min
- ceramic cartridge
- temperature limitation adjustable
- connection type: basic set



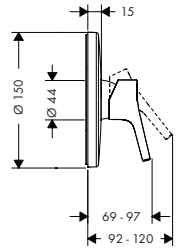

Certificates/declarations

EPD

Finish	Code no.
Chrome	72605000

Required parts (choose one):			Code no.
Option 1		iBox universal 2 Basic set	01500180
+		Adapter plate for iBox universal 2	13588000
Option 2		iBox universal Basic set	01800180

Measurements within scale drawings are in mm.
Technical specifications and units of measure are subject to change.

Talis S Single lever shower mixer for concealed installation

Features

· 1 function · maximum flow rate at 3 bar: 28 l/min · connection type: basic set



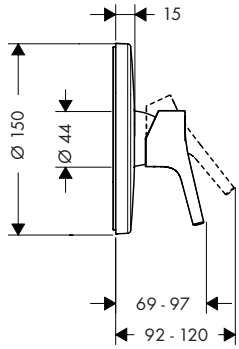

Finish	Code no.
Chrome	72606000

Required parts:	Code no.
Basic set for single lever shower mixer for concealed installation	13620180

Measurements within scale drawings are in mm.
Technical specifications and units of measure are subject to change.

Talis S Single lever basin mixer with pop-up waste set

Features

- consists of: single lever basin mixer, waste set
- ComfortZone 70
- projection: 100 mm
- spout height: 55 mm
- handle variant: pin handle
- spray type: normal spray
- maximum flow rate at 3 bar: 5 l/min
- ceramic cartridge
- temperature limitation adjustable
- suitable for continuous flow water heaters
- pop-up waste set G 1¼
- material waste set: metal
- connection type: G ⅜ connections
- connection dimension: DN15
- EU taxonomy: max. 6 l/min - Substantial Contribution (SC) possible



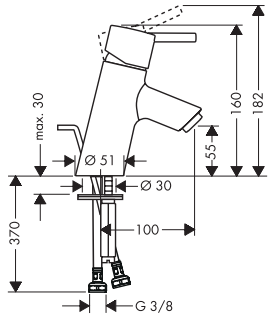

Sustainability

Technologies

Certificates/declarations

Finish	Code no.
Chrome	32020000

Talis S Single lever basin mixer for LowPressure/vented hot water cylinder with pop-up waste set

Features

- consists of: single lever basin mixer, waste set
- ComfortZone 70
- projection: 100 mm
- spout height: 55 mm
- handle variant: pin handle
- spray type: normal spray
- maximum flow rate at 3 bar: 5 l/min
- ceramic cartridge
- temperature limitation adjustable
- pop-up waste set G 1¼
- material waste set: metal
- connection type: copper pipe connections
- connection dimension: DN15
- EU taxonomy: max. 6 l/min - Substantial Contribution (SC) possible



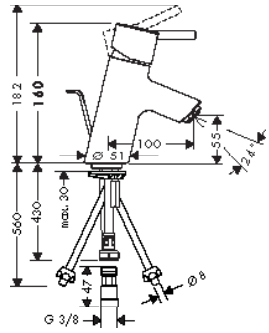

Technologies

Finish	Code no.
Chrome	32032000

Talis S Single lever basin mixer 200 with swivel spout and pop-up waste set

Features

- consists of: single lever basin mixer, waste set
- ComfortZone 200
- projection: 145 mm
- spout height: 191 mm
- handle variant: pin handle
- swivel range 360°
- spray type: normal spray
- maximum flow rate at 3 bar: 5 l/min
- ceramic cartridge
- temperature limitation adjustable
- suitable for continuous flow water heaters
- pop-up waste set G 1¼
- material waste set: metal
- connection type: G ⅜ connections
- connection dimension: DN15
- handle position on the side: bottom-side at the base body (not suitable for wash bowls)
- EU taxonomy: max. 6 l/min - Substantial Contribution (SC) possible



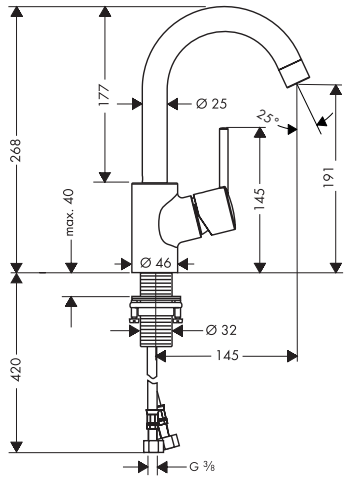

Sustainability

EcoSmart

Technologies

AirPower · Comfort Zone · Quick Clean

Certificates/declarations

EPD

Finish	Code no.
Chrome	32070000

Talis S Pillar tap 40 for cold water or pre-adjusted water without waste set

Features

- ComfortZone 40
- projection: 83 mm
- spout height: 35 mm
- handle variant: pin handle
- spray type: normal spray
- maximum flow rate at 3 bar: 5 l/min
- ceramic valves 90°
- for cold water connection
- connection type: G ⅜ connections
- connection dimension: DN15
- EU taxonomy: max. 6 l/min - Substantial Contribution (SC) possible



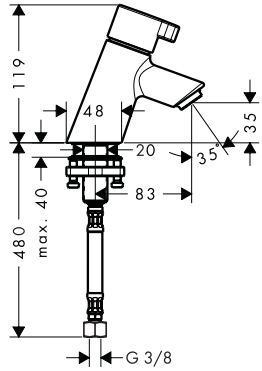

Sustainability

EcoSmart

Technologies

AirPower · Comfort Zone · Quick Clean

Finish	Code no.
Chrome	13132000

Measurements within scale drawings are in mm.
Technical specifications and units of measure are subject to change.

Talis S Single lever bath mixer for exposed installation

Features

- 2 functions
- projection: 172.5 - 180 mm
- centre distance: 150 ± 12 mm
- spray type mixer: normal spray
- maximum flow rate at 3 bar: 19 l/min
- flow rate for bath spout at 3 bar: 18 l/min
- flow rate of hand shower at 3 bar: 19 l/min
- ceramic cartridge
- temperature limitation adjustable
- diverter with automatic resetting
- non-return valve
- with silencer
- suitable for continous flow water heaters
- connection dimension: DN15
- connection type: s-shaped connections
- wall-mounted
- min. operating pressure: 1 bar
- max. operating pressure: 10 bar



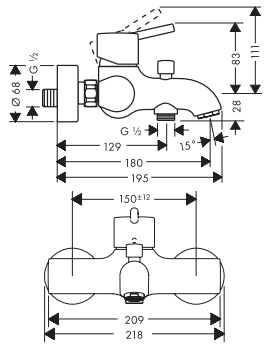

Technologies

AirPower · Quick Clean

Certificates/declarations

EPD

Finish	Code no.
Chrome	32420000

Talis S Single lever bath mixer for concealed installation with integrated security combination according to EN1717 for iBox universal

Features

- 2 functions
- maximum flow rate at 3 bar: 25 l/min
- flow rate for bath spout at 3 bar: 25 l/min
- flow rate of hand shower at 3 bar: 24,5 l/min
- ceramic cartridge
- temperature limitation adjustable
- diverter with automatic resetting
- non-return valve
- with silencer
- with integrated safety combination EN 1717
- connection type: basic set
- wall-mounted
- min. operating pressure: 1 bar
- max. operating pressure: 10 bar



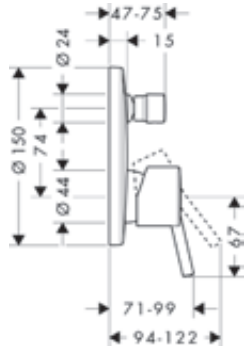

Certificates/declarations

EPD

Finish	Code no.
Chrome	32477000

Required parts (choose one):			Code no.
Option 1		iBox universal 2 Basic set	01500180
	+	Adapter plate for iBox universal 2	13588000
Option 2		iBox universal Basic set	01800180

Measurements within scale drawings are in mm.
Technical specifications and units of measure are subject to change.

Bath spouts

Features of all variants

- 2 functions
- connection type: G ½
- with automatic resetting
- with escutcheon
- wall-mounted
- maximum flow rate at 3 bar: 25 l/min
- connection dimension: DN15
- protected against backflow, according to DIN EN 1717



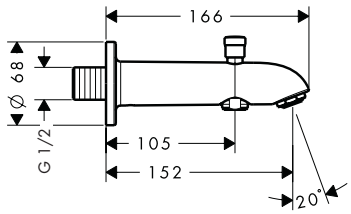



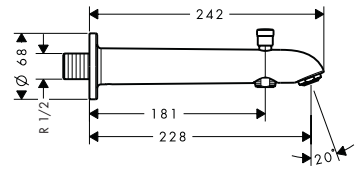

Technologies

AirPower | Quick Clean

Overview variants

	Projection (mm)	Finish	Code no.
	152	Chrome	13423000
	228	Chrome	13424000

Bath spout

Features

- 1 function
- with silencer
- with escutcheon
- projection: 147 mm
- wall-mounted
- maximum flow rate at 3 bar: 27,5 l/min
- connection dimension: DN20



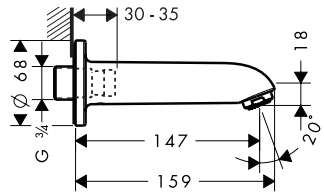

Technologies

AirPower | Quick Clean

Finish	Code no.
Chrome	13414000

Measurements within scale drawings are in mm.
Technical specifications and units of measure are subject to change.

Long swivel spout 30 cm

Features

- with automatic resetting
- length 300 mm
- for installation on single lever shower mixer
- connection dimension DN15



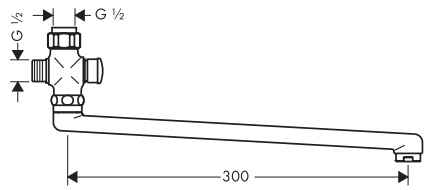

Finish	Code no.
Chrome	14495000

Talis S Single lever shower mixer for concealed installation for iBox universal

Features

- 1 function
- maximum flow rate at 3 bar: 29,3 l/min
- ceramic cartridge
- temperature limitation adjustable
- min. operating pressure: 1 bar
- max. operating pressure: 10 bar
- connection type: basic set



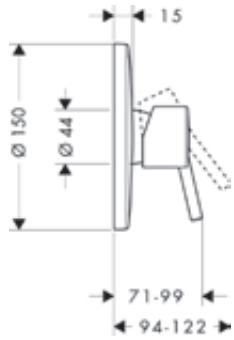

Certificates/declarations

Finish	Code no.
Chrome	32675000

Required parts (choose one):			Code no.
Option 1		iBox universal 2 Basic set	01500180
+		Adapter plate for iBox universal 2	13588000
Option 2		iBox universal Basic set	01800180

Measurements within scale drawings are in mm.
Technical specifications and units of measure are subject to change.

Talis Select E Basin mixers

Features of all variants

- handle variant: cylinder handle
- spray type: normal spray
- maximum flow rate at 3 bar: 5 l/min
- Select cartridge with temperature control
- temperature limitation adjustable
- suitable for continuous flow water heaters
- connection type: G ⅜ connections
- connection dimension: DN15

110



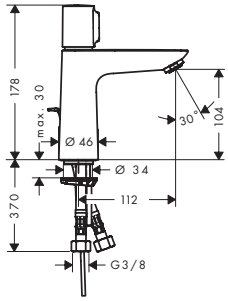

240



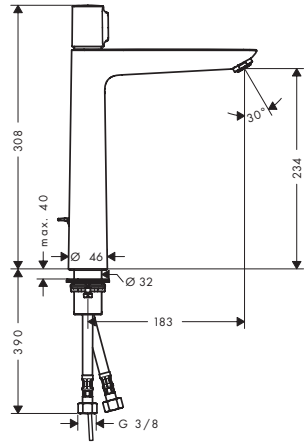

Sustainability

EcoSmart

Technologies

Select | AirPower | Comfort Zone | Quick Clean

Certificates/declarations

EPD

Overview variants

ComfortZone	Projection (mm)	Spout height (mm)	Waste set	Material waste set	For wash bowls	Finish	Code no.
110	112	104	pop-up	metal	–	Chrome	71750000
110	112	104	without	–	–	Chrome	71751000
240	183	234	pop-up	metal	■	Chrome	71752000
240	183	234	without	–	■	Chrome	71753000

Talis E Self-closing faucets without waste sets

Features of all variants

- ComfortZone 110
- projection: 111 mm
- spout height: 106 mm
- handle variant: cylinder handle
- spray type: normal spray
- maximum flow rate at 3 bar: 5 l/min
- running time: 3 - 20 seconds adjustable (7 seconds pre-set)
- connection dimension: DN15
- service tool #93913000 must be used for thermal disinfection
- EU taxonomy: max. 6 l/min - Substantial Contribution (SC) possible



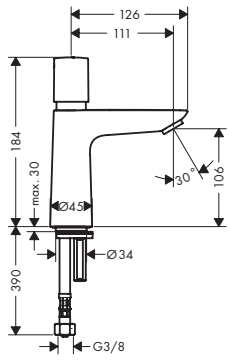



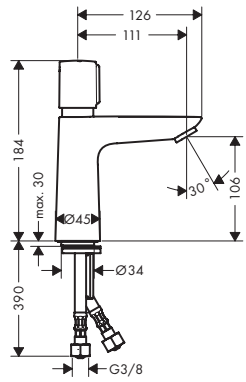

Sustainability

EcoSmart

Technologies

AirPower | Comfort Zone

Overview variants

ComfortZone	Projection (mm)	Spout height (mm)	Temperature adjustment	Finish	Code no.
110	111	106	for cold water or pre-adjusted/conditioned water	Chrome	71719000
110	111	106	adjustable	Chrome	71718000

Optional parts:		Code no.
	Service tool for thermal disinfection	93913000

Measurements within scale drawings are in mm.
Technical specifications and units of measure are subject to change.

Talis E Single lever basin mixers

Features of all variants

- handle variant: lever handle
- spray type: normal spray
- maximum flow rate at 3 bar: 5 l/min
- ceramic cartridge
- temperature limitation adjustable
- suitable for continuous flow water heaters
- connection type: G ⅜ connections
- connection dimension: DN15
- EU taxonomy: max. 6 l/min - Substantial Contribution (SC) possible

80



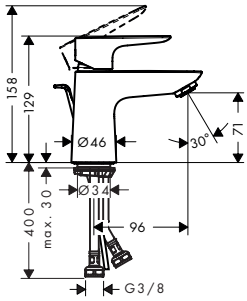

110



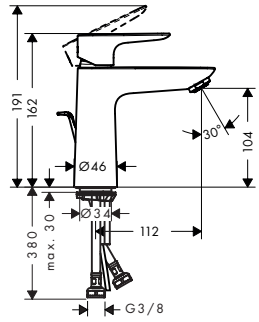

240



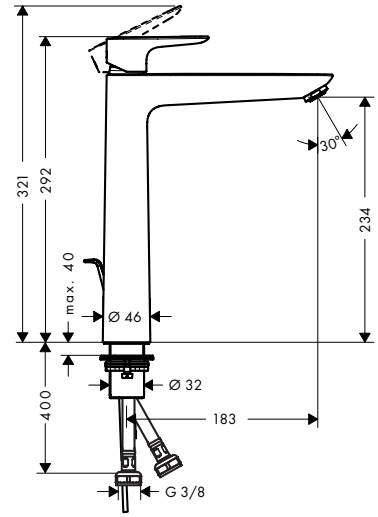

Sustainability

EcoSmart, CoolStart

Technologies

AirPower, Comfort Zone, Quick Clean

Certificates/declarations

EPD

Overview variants

ComfortZone	Projection (mm)	Spout height (mm)	Waste set	Material waste set	CoolStart	For wash bowls	Finish	Code no.
80	96	71	pop-up	metal	■	–	Chrome	71703000
80	96	71	without	–	■	–	Chrome	71704000
80	96	71	pop-up	metal	–	–	Chrome	71700000
80	96	71	push-open	metal	–	–	Chrome	71701000
80	96	71	without	–	–	–	Chrome	71702000
110	112	104	pop-up	metal	■	–	Chrome	71713000
							Brushed Bronze	71713140
							Brushed Black Chrome	71713340
							Matt Black	71713670
							Matt White	71713700
							Polished Gold Optic	71713990
110	112	104	without	–	■	–	Chrome	71714000
							Brushed Bronze	71714140
							Brushed Black Chrome	71714340
							Matt Black	71714670
							Matt White	71714700
							Polished Gold Optic	71714990

For more information about this product, please see the next page.

Measurements within scale drawings are in mm.
Technical specifications and units of measure are subject to change.

Talis E Single lever basin mixers

Overview variants

ComfortZone	Projection (mm)	Spout height (mm)	Waste set	Material waste set	CoolStart	For wash bowls	Finish	Code no.
110	112	104	pop-up	metal	–	–	Chrome	71710000
							Brushed Bronze	71710140
							Brushed Black Chrome	71710340
							Matt Black	71710670
							Matt White	71710700
							Polished Gold Optic	71710990
110	112	104	push-open	metal	–	–	Chrome	71711000
110	112	104	without	–	–	–	Chrome	71712000
							Brushed Bronze	71712140
							Brushed Black Chrome	71712340
							Matt Black	71712670
							Matt White	71712700
							Polished Gold Optic	71712990
240	183	234	pop-up	metal	–	■	Chrome	71716000
							Brushed Bronze	71716140
							Brushed Black Chrome	71716340
							Matt Black	71716670
							Matt White	71716700
							Polished Gold Optic	71716990
240	183	234	without	–	–	■	Chrome	71717000
							Brushed Bronze	71717140
							Brushed Black Chrome	71717340
							Matt Black	71717670
							Matt White	71717700
							Polished Gold Optic	71717990

Talis E Single lever basin mixers LowFlow

Features of all variants

- consists of: single lever basin mixer, waste set
- handle variant: lever handle
- spray type: normal spray
- maximum flow rate at 3 bar: 3,5 l/min
- ceramic cartridge
- temperature limitation adjustable
- suitable for continuous flow water heaters
- pop-up waste set G 1¼
- material waste set: metal
- connection type: G ⅜ connections
- connection dimension: DN15

80



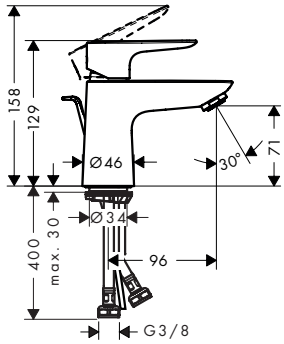

110



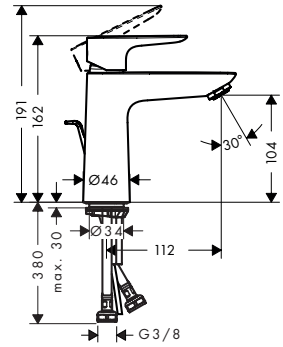

Sustainability

EcoSmart

Technologies

AirPower | Comfort Zone | Quick Clean

Measurements within scale drawings are in mm.
Technical specifications and units of measure are subject to change.

Talis E Single lever basin mixers LowFlow

Overview variants

ComfortZone	Projection (mm)	Spout height (mm)	Finish	Code no.
80	96	71	Chrome	71705000
110	112	104	Chrome	71715000

Talis E Single lever basin mixer 80 for LowPressure/vented hot water cylinders with pop-up waste set

Features

- consists of: single lever basin mixer, waste set
- ComfortZone 80
- projection: 96 mm
- spout height: 71 mm
- handle variant: lever handle
- spray type: laminar spray
- maximum flow rate at 3 bar: 5 l/min
- ceramic cartridge
- temperature limitation adjustable
- pop-up waste set G 1¼
- material waste set: metal
- connection type: copper pipe connections
- EU taxonomy: max. 6 l/min - Substantial Contribution (SC) possible



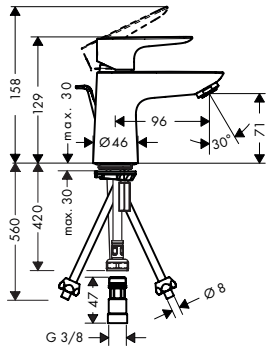

Technologies

Comfort Zone | Low Pressure

Finish	Code no.
Chrome	71707000

Talis E Single lever basin mixers

Features of all variants

- ComfortZone 150
- projection: 141 mm
- spout height: 133 mm
- handle variant: lever handle
- spray type: normal spray
- maximum flow rate at 3 bar: 5 l/min
- ceramic cartridge
- temperature limitation adjustable
- suitable for continuous flow water heaters
- connection type: G ⅜ connections
- connection dimension: DN15
- EU taxonomy: max. 6 l/min - Substantial Contribution (SC) possible



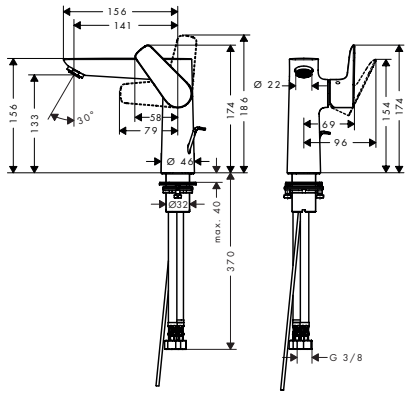

Sustainability

EcoSmart

Technologies

AirPower | Comfort Zone | Quick Clean

Certificates/declarations

EPD

Overview variants

ComfortZone	Projection (mm)	Spout height (mm)	Waste set	Material waste set	Finish	Code no.
150	141	133	pop-up	metal	Chrome	71754000
					Brushed Bronze	71754140
					Brushed Black Chrome	71754340
					Matt Black	71754670
					Matt White	71754700
					Polished Gold Optic	71754990
150	141	133	without	–	Chrome	71755000

Measurements within scale drawings are in mm.
Technical specifications and units of measure are subject to change.

Talis E Pillar tap 80 with lever handle for cold water or pre-adjusted water without waste set

Features

- ComfortZone 80
- projection: 96 mm
- spout height: 71 mm
- handle variant: lever handle
- spray type: normal spray
- maximum flow rate at 3 bar: 5 l/min
- ceramic cartridge
- for cold water connection
- connection type: G ⅜ connection hose
- connection dimension: DN15
- EU taxonomy: max. 6 l/min - Substantial Contribution (SC) possible



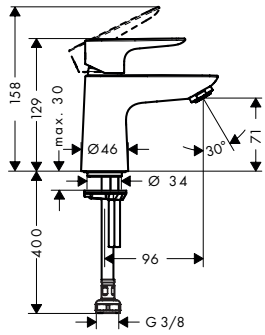

Sustainability

EcoSmart

Technologies

AirPower | Comfort Zone | Quick Clean

Certificates/declarations

EPD

Finish	Code no.
Chrome	71706000

Talis E 3-hole basin mixer with pop-up waste set

Features

- consists of: 3-hole basin mixer, waste set
- ComfortZone 150
- projection: 112 mm
- spout height: 104 mm
- maximum flow rate at 3 bar: 5 l/min
- ceramic valves hot/cold 90°
- suitable for continuous flow water heaters
- pop-up waste set G 1¼
- material waste set: metal
- connection type: G ⅜ connections
- connection dimension: DN15
- EU taxonomy: max. 6 l/min - Substantial Contribution (SC) possible



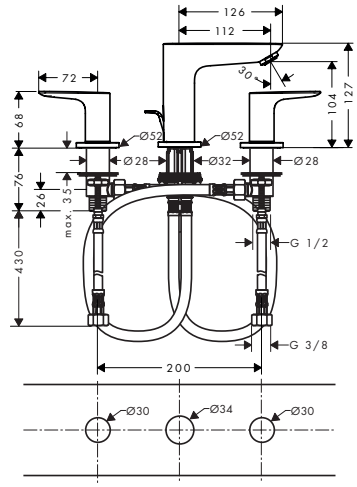

Sustainability

EcoSmart

Technologies

AirPower | Comfort Zone | Quick Clean

Certificates/declarations

EPD

Finish	Code no.
Chrome	71733000
Brushed Bronze	71733140
Brushed Black Chrome	71733340
Matt Black	71733670
Matt White	71733700

Measurements within scale drawings are in mm.
Technical specifications and units of measure are subject to change.

Talis E Single lever basin mixers for concealed installation wall-mounted

Features of all variants

- consists of: single lever basin mixer for concealed installation wall-mounted, waste set
- handle variant: lever handle
- spray type: normal spray
- maximum flow rate at 3 bar: 5 l/min
- ceramic cartridge
- temperature limitation adjustable
- suitable for continuous flow water heaters
- non-closing waste set
- material waste set: metal
- connection type: basic set
- connection dimension: DN15
- EU taxonomy: max. 6 l/min - Substantial Contribution (SC) possible

165



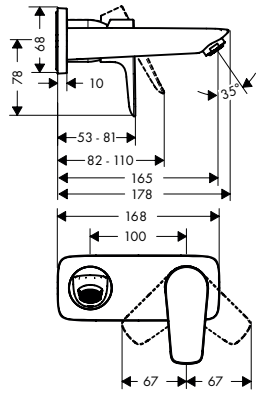

225



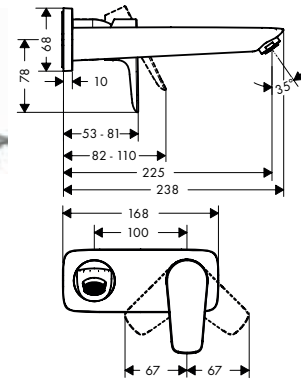

Sustainability

EcoSmart

Technologies

AirPower · Quick Clean

Certificates/declarations

EPD

Overview variants

	Projection (mm)	Finish	Code no.
	165	Chrome	71732000
	225	Chrome	71734000
		Brushed Bronze	71734140
		Brushed Black Chrome	71734340
		Matt Black	71734670
		Matt White	71734700

Required parts:	Code no.
Basic set for single lever basin mixer for concealed installation wall-mounted	13622180

Talis E Single lever bidet mixers

Features of all variants

- consists of: single lever bidet mixer, waste set
- projection: 116 mm
- spout height: 78 mm
- aerator with ball pivot
- spray type: normal spray
- maximum flow rate at 3 bar: 5 l/min
- ceramic cartridge
- temperature limitation adjustable
- suitable for continous flow water heaters
- material waste set: metal
- connection type: G ⅜ connections
- connection dimension: DN15
- EU taxonomy: max. 6 l/min - Substantial Contribution (SC) possible



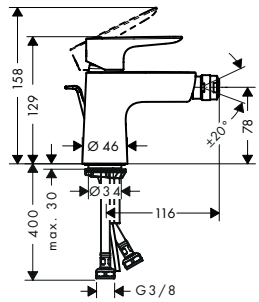

Sustainability

EcoSmart

Technologies

AirPower · Comfort Zone · Quick Clean

Certificates/declarations

EPD

For more information about this product, please see the next page.

Talis E Single lever bidet mixers

Overview variants

Waste set	Finish	Code no.
pop-up	Brushed Bronze	71720140
	Brushed Black Chrome	71720340
	Matt Black	71720670
	Matt White	71720700
	Polished Gold Optic	71720990
push-open	Chrome	71721000

Talis E Single lever basin mixer with bidette hand shower and shower hose 160 cm

Features

- consists of: single lever basin mixer, bidette hand shower, shower holder, shower hose, waste set
- ComfortZone 80
- projection: 96 mm
- spout height: 71 mm
- handle variant: lever handle
- maximum flow rate at 3 bar: 5,7 l/min
- ceramic cartridge
- temperature limitation adjustable
- suitable for continuous flow water heaters
- push-open waste set G 1¼
- material waste set: metal
- connection type: G ⅜ connections
- connection dimension: DN15
- EU taxonomy: max. 6 l/min - Substantial Contribution (SC) possible



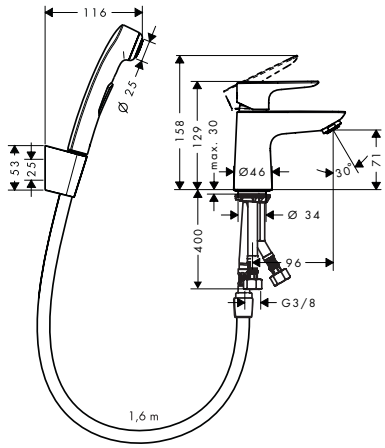

Sustainability

EcoSmart

Technologies

AirPower · Comfort Zone · Quick Clean

Certificates/declarations

EPD

Finish	Code no.
Chrome	71729000

Measurements within scale drawings are in mm.
Technical specifications and units of measure are subject to change.

Talis E Single lever bath mixer for exposed installation

Features

- 2 functions
- projection: 194 mm
- centre distance: 150 ± 12 mm
- spray type mixer: normal spray
- maximum flow rate at 3 bar: 19,2 l/min
- flow rate for bath spout at 3 bar: 19,2 l/min
- flow rate of hand shower at 3 bar: 16,8 l/min
- ceramic cartridge
- temperature limitation adjustable
- diverter with automatic resetting
- with silencer
- suitable for continous flow water heaters
- connection dimension: DN15
- connection type: s-shaped connections
- wall-mounted



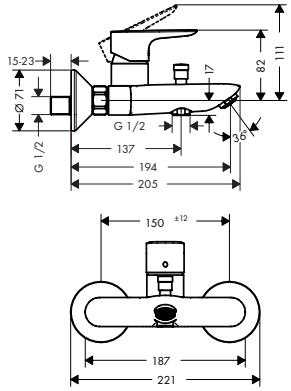

Technologies

AirPower Quick Clean

Certificates/declarations

EPD

Finish	Code no.
Chrome	71740000
Brushed Bronze	71740140
Brushed Black Chrome	71740340
Matt Black	71740670
Matt White	71740700
Polished Gold Optic	71740990

Talis E Single lever bath mixer for concealed installation for iBox universal

Features

- 2 functions
- flow rate upper outlet: 21 l/min
- flow rate lower outlet: 29 l/min
- maximum flow rate at 3 bar: 29 l/min
- ceramic cartridge
- temperature limitation adjustable
- diverter with automatic resetting
- with silencer
- connection type: basic set
- wall-mounted
- min. operating pressure: 1 bar
- max. operating pressure: 10 bar



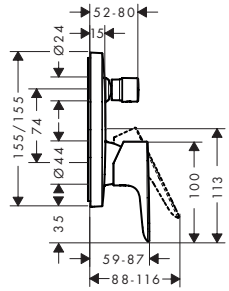

Certificates/declarations

EPD

Finish	Code no.
Chrome	71745000
Brushed Bronze	71745140
Brushed Black Chrome	71745340
Matt Black	71745670
Matt White	71745700
Polished Gold Optic	71745990

Required parts (choose one):			Code no.
Option 1		iBox universal 2 Basic set	01500180
+		Adapter plate for iBox universal 2	13588000
Option 2		iBox universal Basic set	01800180

Measurements within scale drawings are in mm.
Technical specifications and units of measure are subject to change.

Talis E Single lever bath mixer for concealed installation

Features

- 2 functions
- maximum flow rate at 3 bar: 30,7 l/min
- flow rate for bath spout at 3 bar: 30,7 l/min
- flow rate of hand shower at 3 bar: 27 l/min
- ceramic cartridge
- temperature limitation adjustable
- diverter with automatic resetting
- connection type: basic set
- wall-mounted
- min. operating pressure: 1 bar
- max. operating pressure: 10 bar



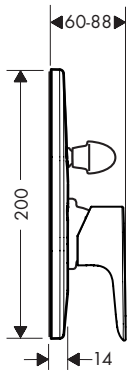

Finish	Code no.
Chrome	71746000

Required parts:	Code no.
Basic set for single lever bath mixer for concealed installation	31741180

Logis Bath spout

Features

- 1 function
- connection type: G ¾
- with escutcheon
- projection: 195 mm
- wall-mounted
- maximum flow rate at 3 bar: 21 l/min
- connection dimension: DN20
- spray type: normal spray



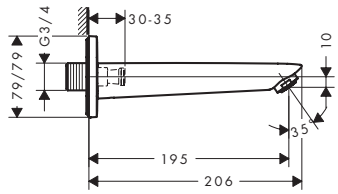

Technologies

AirPower

Certificates/declarations

EPD

Finish	Code no.
Chrome	71410000

Optional parts:	Code no.
Socket for G1/2 connection	95626000

Measurements within scale drawings are in mm.
Technical specifications and units of measure are subject to change.

Talis E 3-hole rim mounted bath mixer

Features

- 2 functions
- projection: 196 mm
- ceramic cartridge
- non-return valve
- with silencer
- wall-mounted



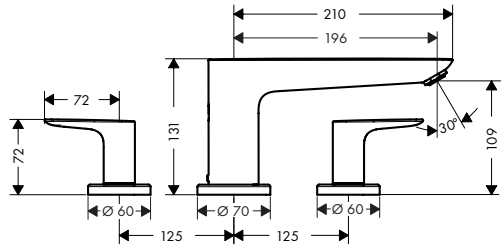

Technologies

AirPower, Quick Clean

Finish	Code no.
Chrome	71747000

Required parts:	Code no.
Basic set for 3-hole rim mounted bath mixer	13233180

Talis E 3-hole rim mounted single lever bath mixer for Secuflex

Features

- consists of: 3-hole rim mounted single lever bath mixer, hand shower, shower holder
- 2 functions
- projection: 196 mm
- spray type mixer: normal spray
- spray type hand shower: Rain
- maximum pull-out length of hand shower: 1.10 m
- maximum flow rate at 3 bar: 18 l/min
- flow rate for bath spout at 3 bar: 18 l/min
- flow rate of hand shower at 3 bar: 15 l/min
- ceramic cartridge
- temperature limitation adjustable
- diverter with automatic resetting
- non-return valve
- connection dimension: DN15
- connection type: basic set
- installation on bath rim
- min. operating pressure: 1 bar
- max. operating pressure: 10 bar



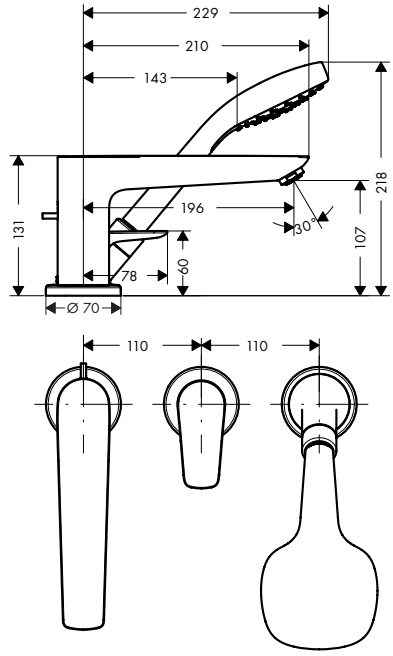

Technologies

AirPower, Quick Clean

Spray types

Rain

Finish	Code no.
Chrome	71730000

Consisting of:	Included in	Code no.
Croma E Hand shower 110 1jet	71730000	26814400

Required parts:	Code no.
Basic set for 3-hole rim mounted single lever bath mixer	13437180

Measurements within scale drawings are in mm.
Technical specifications and units of measure are subject to change.

Talis E 3-hole rim mounted single lever bath mixer

Features

- consists of: 3-hole rim mounted single lever bath mixer, hand shower
- 2 functions
- projection: 196 mm
- spray type mixer: normal spray
- spray type hand shower: Rain
- maximum pull-out length of hand shower: 1.60 m
- maximum flow rate at 3 bar: 19 l/min
- flow rate for bath spout at 3 bar: 19 l/min
- flow rate of hand shower at 3 bar: 15 l/min
- ceramic cartridge
- temperature limitation adjustable
- diverter with automatic resetting
- non-return valve
- suitable for continous flow water heaters
- connection dimension: DN15
- installation on bath rim



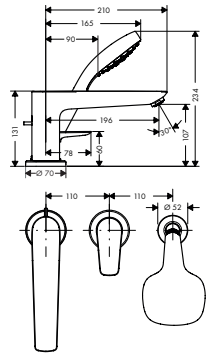

Technologies

AirPower, Quick Clean

Spray types

Rain

Finish	Code no.
Chrome	71731000

Consisting of:	Included in	Code no.
Croma E Hand shower 110 1jet	71731000	26814400

Required parts:	Code no.
Basic set for 3-hole rim mounted single lever bath mixer	13439180

Talis E 4-hole rim mounted bath mixer

Features

- consists of: 4-hole rim mounted bath mixer, hand shower
- 2 functions
- projection: 196 mm
- maximum pull-out length of hand shower: 1.60 m
- maximum flow rate at 3 bar: 23,8 l/min
- flow rate for bath spout at 3 bar: 23,8 l/min
- flow rate of hand shower at 3 bar: 16,7 l/min
- non-return valve
- connection dimension: DN15
- installation on bath rim
- min. operating pressure: 1 bar



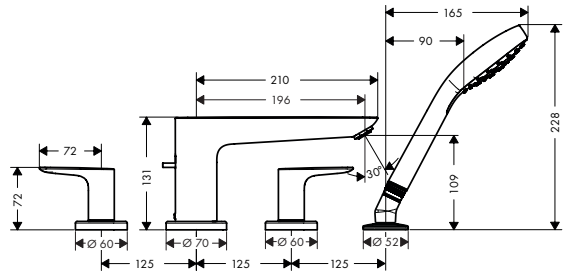

Technologies

AirPower, Quick Clean

Finish	Code no.
Chrome	71748000
Brushed Bronze	71748140
Brushed Black Chrome	71748340
Matt Black	71748670
Matt White	71748700
Polished Gold Optic	71748990

Consisting of:	Included in	Code no.
Croma E Hand shower 110 1jet	71748XXX	26814XXX

Required parts:	Code no.
Basic set for 4-hole rim mounted bath mixer	13244180

Measurements within scale drawings are in mm.
Technical specifications and units of measure are subject to change.

Talis E Single lever shower mixer for exposed installation

Features

- 1 function
- centre distance: 150 ± 12 mm
- maximum flow rate at 3 bar: 22 l/min
- flow rate of hand shower at 3 bar: 16 l/min
- ceramic cartridge
- temperature limitation adjustable
- non-return valve
- with silencer
- hose connection DN15
- connection dimension: DN15
- connection type: s-shaped connections



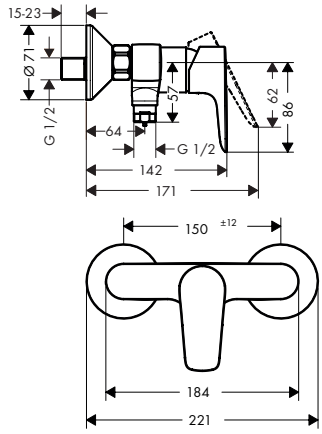

Certificates/declarations

Finish	Code no.
Chrome	71760000
Brushed Bronze	71760140
Brushed Black Chrome	71760340
Matt Black	71760670
Matt White	71760700
Polished Gold Optic	71760990

Talis E Single lever shower mixer for concealed installation for iBox universal

Features

- 1 function
- maximum flow rate at 3 bar: 29,3 l/min
- ceramic cartridge
- temperature limitation adjustable
- connection type: basic set



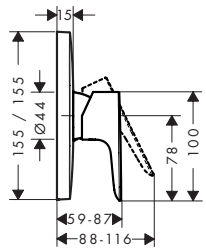

Certificates/declarations

Finish	Code no.
Chrome	71765000
Brushed Bronze	71765140
Brushed Black Chrome	71765340
Matt Black	71765670
Matt White	71765700
Polished Gold Optic	71765990

Required parts (choose one):			Code no.
Option 1		iBox universal 2 Basic set	01500180
+		Adapter plate for iBox universal 2	13588000
Option 2		iBox universal Basic set	01800180

Measurements within scale drawings are in mm.
Technical specifications and units of measure are subject to change.

Talis E Single lever shower mixer HighFlow for concealed installation for iBox universal

Features

- 1 function
- maximum flow rate at 3 bar: 47 l/min
- ceramic cartridge (Highflow)
- temperature limitation adjustable
- min. operating pressure: 1 bar
- max. operating pressure: 10 bar
- connection type: basic set



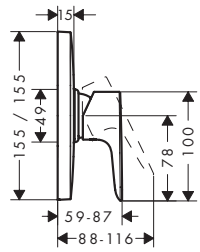

Technologies

Low Pressure

Finish	Code no.
Chrome	71768000

Required parts (choose one):			Code no.
Option 1		iBox universal 2 Basic set	01500180
+		Adapter plate for iBox universal 2	13588000
Option 2		iBox universal Basic set	01800180

Talis E Single lever shower mixers for concealed installation

Features of all variants

- 1 function
- maximum flow rate at 3 bar: 28,7 l/min
- min. operating pressure: 1 bar
- max. operating pressure: 10 bar
- connection type: basic set



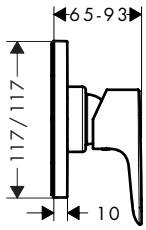



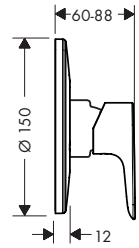

Certificates/declarations

EPD

Overview variants

Shape	Finish	Code no.
softcube	Chrome	71764000
	Matt Black	71764670
round	Chrome	71766000

Required parts:		Code no.
	Basic set for single lever shower mixer for concealed installation	13620180

Measurements within scale drawings are in mm.
Technical specifications and units of measure are subject to change.



Focus

Focus Single lever basin mixers

Features of all variants

- handle variant: lever handle
- spray type: normal spray
- maximum flow rate at 3 bar: 5 l/min
- ceramic cartridge
- temperature limitation adjustable
- suitable for continuous flow water heaters
- connection type: G ⅜ connections
- connection dimension: DN15
- EU taxonomy: max. 6 l/min - Substantial Contribution (SC) possible

70



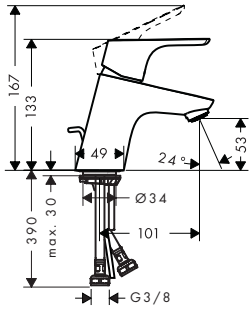

100



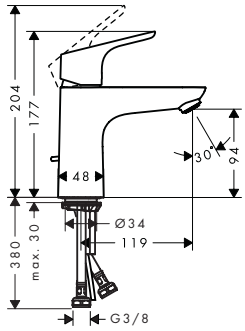

190



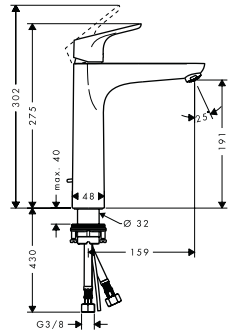

230



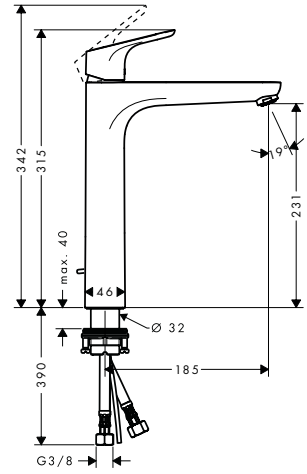

Sustainability

EcoSmart, CoolStart

Technologies

AirPower, Comfort Zone, Quick Clean

Certificates/declarations

EPD

Overview variants

ComfortZone	Projection (mm)	Spout height (mm)	Waste set	Material waste set	CoolStart	For wash bowls	Finish	Code no.
70	101	53	pop-up	metal	■	–	Chrome	31539000
70	101	53	pop-up	metal	–	–	Chrome	31730000
70	101	53	push-open	synthetic	–	–	Chrome	31604000
70	101	53	chain	–	–	–	Chrome	31732000
70	101	53	without	–	–	–	Chrome	31733000
100	119	94	pop-up	metal	■	–	Chrome	31621000
100	119	94	without	–	■	–	Chrome	31509000
100	119	94	pop-up	metal	–	–	Chrome	31607000
100	119	94	without	–	–	–	Chrome	31517000
190	159	191	pop-up	metal	–	–	Chrome	31608000
190	159	191	without	–	–	–	Chrome	31518000
230	185	231	pop-up	metal	–	■	Chrome	31531000
230	185	231	without	–	–	■	Chrome	31532000

Measurements within scale drawings are in mm.
Technical specifications and units of measure are subject to change.

Focus Single lever basin mixer 70 for LowPressure/vented hot water cylinders with pop-up waste set

Features

- consists of: single lever basin mixer, waste set
- ComfortZone 70
- projection: 101 mm
- spout height: 53 mm
- handle variant: lever handle
- spray type: laminar spray
- maximum flow rate at 3 bar: 5 l/min
- ceramic cartridge
- temperature limitation adjustable
- pop-up waste set G 1¼
- material waste set: metal
- connection type: copper pipe connections
- connection dimension: DN15
- EU taxonomy: max. 6 l/min - Substantial Contribution (SC) possible



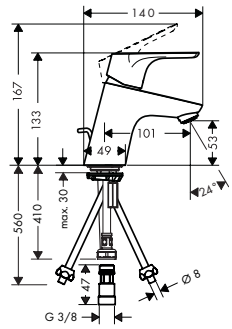

Technologies

Comfort Zone | Low Pressure

Certificates/declarations

EPD

Finish	Code no.
Chrome	31132000

Focus Single lever basin mixers LowFlow

Features of all variants

- handle variant: lever handle
- spray type: normal spray
- maximum flow rate at 3 bar: 3,5 l/min
- ceramic cartridge
- temperature limitation adjustable
- suitable for continuous flow water heaters
- connection type: G ⅜ connections
- connection dimension: DN15

70



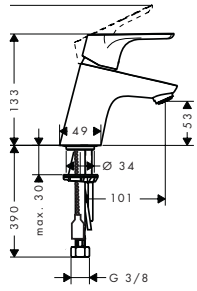

100



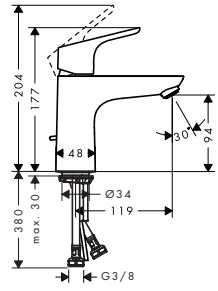

Sustainability

EcoSmart

Technologies

AirPower | Comfort Zone | Quick Clean

Certificates/declarations

EPD

Overview variants

ComfortZone	Projection (mm)	Spout height (mm)	Waste set	Material waste set	Finish	Code no.
70	101	53	without	–	Chrome	31952000
100	119	94	pop-up	metal	Chrome	31603000
100	119	94	without	–	Chrome	31513000

Measurements within scale drawings are in mm.
Technical specifications and units of measure are subject to change.

Focus Single lever basin mixers with extra long handle

Features of all variants

- larger print for greater clarity
- with extra long barrier-free handle
- spray type: laminar spray
- maximum flow rate at 3 bar: 5 l/min
- ceramic cartridge
- temperature limitation adjustable
- suitable for continuous flow water heaters
- connection type: G ⅜ connections
- connection dimension: DN15
- EU taxonomy: max. 6 l/min - Substantial Contribution (SC) possible

70



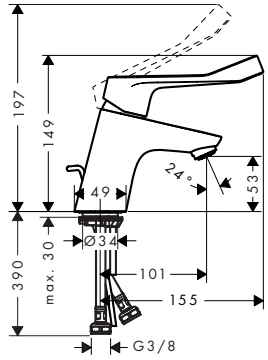

100



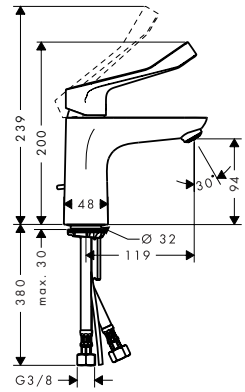

Sustainability

EcoSmart

Technologies

Comfort Zone

Certificates/declarations

EPD

Overview variants

ComfortZone	Projection (mm)	Spout height (mm)	Waste set	Material waste set	Finish	Code no.
70	101	53	pop-up	metal	Chrome	31910000
70	101	53	without	–	Chrome	31914000
100	119	94	pop-up	metal	Chrome	31911000
100	119	94	without	–	Chrome	31915000

Focus Single lever basin mixer 100 with 2 flow rates with pop-up waste set

Features

- consists of: single lever basin mixer, waste set
- ComfortZone 100
- projection: 119 mm
- spout height: 94 mm
- handle variant: lever handle
- spray type: normal spray
- maximum flow rate at 3 bar: 10,5 l/min
- ceramic cartridge with Eco handle position for 2 flow rates
- temperature limitation adjustable
- suitable for continuous flow water heaters
- pop-up waste set G 1¼
- material waste set: metal
- connection type: G ⅜ connections
- connection dimension: DN15
- cold water in basic handle position
- EU taxonomy: max. 6 l/min - Substantial Contribution (SC) possible



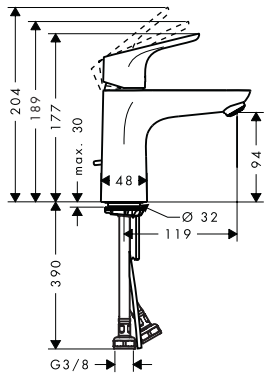

Sustainability

Eco Selection · EcoSmart · CoolStart

Technologies

AirPower · Comfort Zone · Quick Clean

Certificates/declarations

EPD

Finish	Code no.
Chrome	31657000

Measurements within scale drawings are in mm.
Technical specifications and units of measure are subject to change.

Focus Single lever basin mixers with swivel spout

Features of all variants

- ComfortZone 240
- projection: 160 mm
- spout height: 236 mm
- handle variant: lever handle
- swivel range 120°
- spray type: normal spray
- maximum flow rate at 3 bar: 5 l/min
- ceramic cartridge
- temperature limitation adjustable
- suitable for continuous flow water heaters
- connection type: G ⅜ connections
- connection dimension: DN15
- handle position on the side: bottom-side at the base body (not suitable for wash bowls)
- EU taxonomy: max. 6 l/min - Substantial Contribution (SC) possible



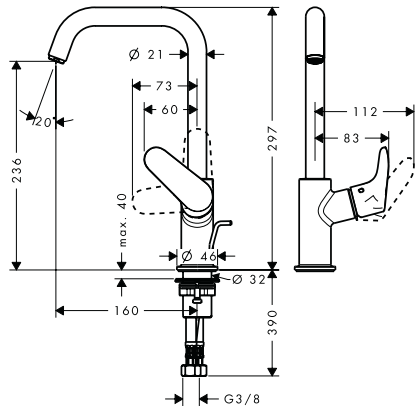

Sustainability

Technologies

Certificates/declarations

Overview variants

ComfortZone	Projection (mm)	Spout height (mm)	Waste set	Material waste set	Finish	Code no.
240	160	236	pop-up	metal	Chrome	31609000
240	160	236	without	–	Chrome	31519000

Focus Pillar tap 70 with lever handle for cold water or pre-adjusted water without waste set

Features

- ComfortZone 70
- projection: 101 mm
- spout height: 53 mm
- handle variant: lever handle
- spray type: normal spray
- maximum flow rate at 3 bar: 5 l/min
- ceramic cartridge
- for cold water connection
- connection type: G ⅜ connection hose
- connection dimension: DN15
- EU taxonomy: max. 6 l/min - Substantial Contribution (SC) possible



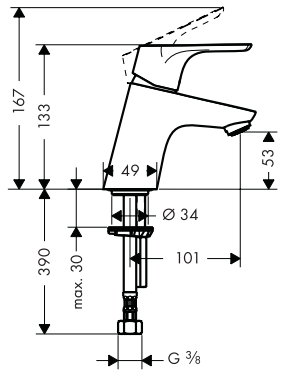

Sustainability

Technologies

Certificates/declarations

Finish	Code no.
Chrome	31130000

Measurements within scale drawings are in mm.
Technical specifications and units of measure are subject to change.

Focus 3-hole basin mixer 100 with pop-up waste set

Features

- consists of: 3-hole basin mixer, waste set
- ComfortZone 100
- projection: 120 mm
- spout height: 93 mm
- maximum flow rate at 3 bar: 5 l/min
- ceramic valves hot/cold 90°
- suitable for continuous flow water heaters
- pop-up waste set G 1¼
- material waste set: metal
- connection type: G ⅜ connections
- connection dimension: DN15
- EU taxonomy: max. 6 l/min - Substantial Contribution (SC) possible



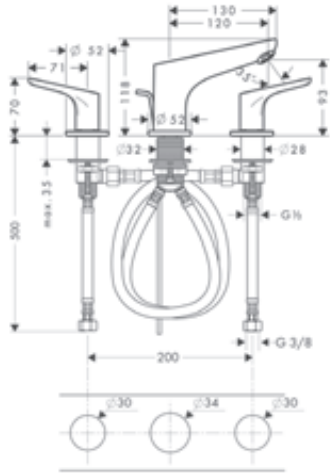

Sustainability

EcoSmart

Technologies

AirPower | Comfort Zone | Quick Clean

Finish	Code no.
Chrome	31937000

Focus Single lever basin mixer for exposed installation wall-mounted

Features

- projection: 180 mm
- handle variant: lever handle
- centre distance: 150 ± 12 mm
- spray type: normal spray
- maximum flow rate at 3 bar: 5 l/min
- ceramic cartridge
- temperature limitation adjustable
- with noise reduction
- suitable for continuous flow water heaters
- connection type: s-shaped connections
- connection dimension: DN15
- EU taxonomy: max. 6 l/min - Substantial Contribution (SC) possible



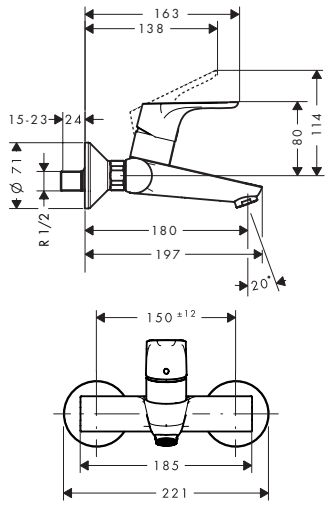

Sustainability

EcoSmart

Technologies

AirPower | Quick Clean

Certificates/declarations

EPD

Finish	Code no.
Chrome	31923000

Measurements within scale drawings are in mm.
Technical specifications and units of measure are subject to change.

Focus Single lever basin mixer for exposed installation with extra long handle 12,1 cm

Features

- projection: 180 mm
- larger print for greater clarity
- with extra long barrier-free handle
- centre distance: 150 ± 12 mm
- spray type: laminar spray
- maximum flow rate at 3 bar: 5 l/min
- ceramic cartridge
- temperature limitation adjustable
- with noise reduction
- suitable for continuous flow water heaters
- connection type: s-shaped connections
- connection dimension: DN15
- EU taxonomy: max. 6 l/min - Substantial Contribution (SC) possible



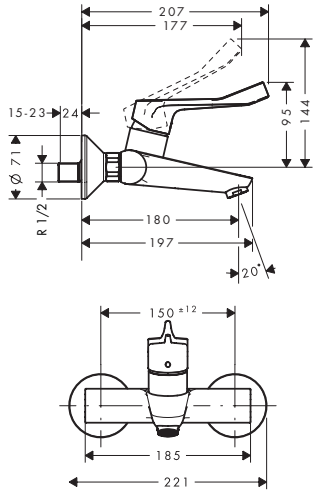

Sustainability

EcoSmart

Finish	Code no.
Chrome	31913000

Focus Electronic basin mixers

Features of all variants

- ComfortZone 130
- projection: 127 mm
- spray type: normal spray
- maximum flow rate at 3 bar: 5 l/min
- temperature limitation adjustable
- non-return valve
- suitable for continous flow water heaters
- infrared sensor technology
- automatic environmental adjustment of infrared sensor
- adjustable optical range of infrared sensor (2 settings)
- running time: 10 s
- hygiene rinse activatable (automatic water flow)
- frequency of hygiene rinse: 24 h
- flushing time hygiene rinse: 10 s
- permanent rinse activatable (single water flow for 180 seconds, suitable for thermal disinfection)
- cleaning mode: manual water stop for washbasin cleaning
- connection dimension: DN15
- TÜV certified
- dirt filters in the connection hoses
- EU taxonomy: max. 6 l/min - Substantial Contribution (SC) possible

pre adjustable

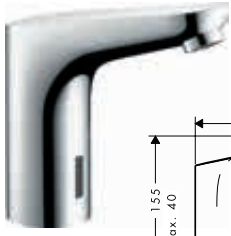

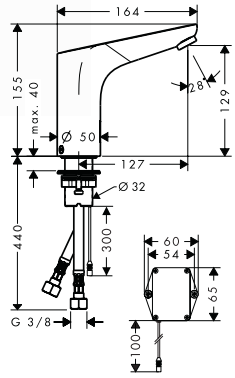

adjustable

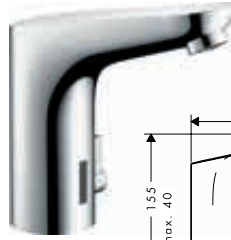

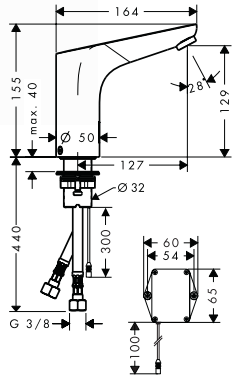

Sustainability

EcoSmart

Technologies

Sensor Activation | AirPower | Comfort Zone

Certificates/declarations

EPD

Overview variants

Power supply	Temperature adjustment	Finish	Code no.
battery operation	pre adjustable	Chrome	31172000
battery operation	adjustable	Chrome	31171000
mains connection	pre adjustable	Chrome	31174000
mains connection	adjustable	Chrome	31173000

Measurements within scale drawings are in mm.
Technical specifications and units of measure are subject to change.

Focus Single lever bidet mixers

Features of all variants

- consists of: single lever bidet mixer, waste set
- projection: 126 mm
- spout height: 54 mm
- aerator with ball pivot
- spray type: normal spray
- maximum flow rate at 3 bar: 7,2 l/min
- ceramic cartridge
- temperature limitation adjustable
- suitable for continous flow water heaters
- material waste set: metal
- connection type: G ⅜ connections
- connection dimension: DN15



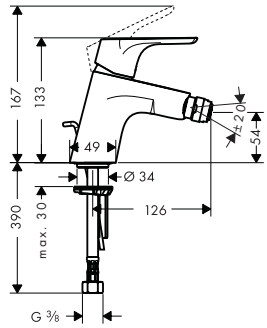

Technologies

AirPower · Quick Clean

Certificates/declarations

EPD

Overview variants

Waste set	Finish	Code no.
pop-up	Chrome	31920000
push-open	Chrome	31922000

Focus Single lever bidet mixer with 2 flow rates with pop-up waste set

Features

- consists of: single lever bidet mixer, waste set
- projection: 126 mm
- spout height: 54 mm
- aerator with ball pivot
- spray type: normal spray
- maximum flow rate at 3 bar: 8,3 l/min
- ceramic cartridge with Eco handle position for 2 flow rates
- temperature limitation adjustable
- suitable for continous flow water heaters
- material waste set: metal
- connection type: G ⅜ connections
- connection dimension: DN15



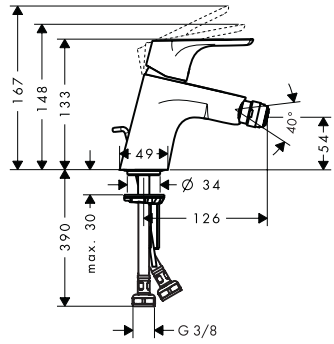

Sustainability

Eco Selection

Technologies

AirPower · Quick Clean

Certificates/declarations

EPD

Finish	Code no.
Chrome	31928000

Measurements within scale drawings are in mm.
Technical specifications and units of measure are subject to change.

Focus Single lever basin mixers with bidette hand shower and shower hose 160 cm

Features of all variants

- handle variant: lever handle
- maximum flow rate at 3 bar: 5 l/min
- ceramic cartridge
- temperature limitation adjustable
- suitable for continuous flow water heaters
- connection type: G ⅜ connections
- connection dimension: DN15
- EU taxonomy: max. 6 l/min - Substantial Contribution (SC) possible

70



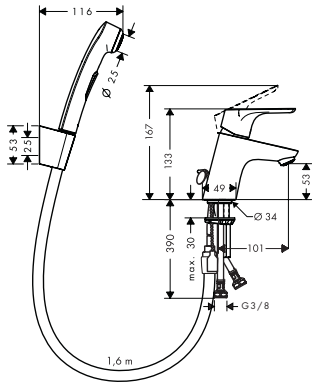

100



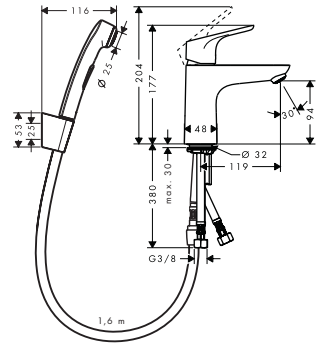

Sustainability

EcoSmart

Technologies

AirPower · Comfort Zone · Quick Clean

Certificates/declarations

EPD

Overview variants

ComfortZone	Projection (mm)	Spout height (mm)	Finish	Code no.
70	101	53	Chrome	31926000
100	119	94	Chrome	31927000

Focus Single lever bath mixer for exposed installation

Features

- 2 functions
- projection: 180 mm
- centre distance: 150 ± 12 mm
- spray type mixer: normal spray
- maximum flow rate at 3 bar: 19,8 l/min
- flow rate for bath spout at 3 bar: 19,8 l/min
- flow rate of hand shower at 3 bar: 15,4 l/min
- ceramic cartridge
- temperature limitation adjustable
- diverter with automatic resetting
- protected against backflow, according to DIN EN 1717
- with silencer
- suitable for continous flow water heaters
- connection dimension: DN15
- connection type: s-shaped connections
- wall-mounted
- min. operating pressure: 1 bar
- max. operating pressure: 10 bar



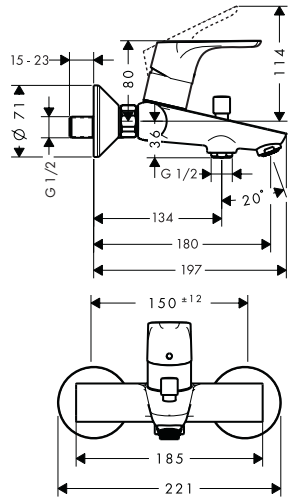

Technologies

AirPower · Quick Clean

Certificates/declarations

EPD

Finish	Code no.
Chrome	31940000

Measurements within scale drawings are in mm.
Technical specifications and units of measure are subject to change.

Focus Single lever bath mixer for exposed installation with 2 flow rates

Features

- 2 functions
- projection: 172 - 179.5 mm
- centre distance: 150 ± 12 mm
- spray type mixer: normal spray
- maximum flow rate at 3 bar: 22 l/min
- ceramic cartridge with Eco handle position for 2 flow rates
- temperature limitation adjustable
- diverter with automatic resetting
- protected against backflow, according to DIN EN 1717
- with silencer
- suitable for continous flow water heaters
- connection dimension: DN15
- connection type: s-shaped connections
- wall-mounted
- no additional maintenance opening required



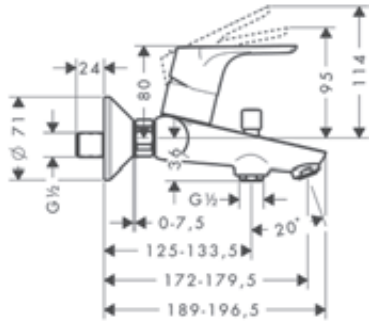

Sustainability

Technologies

Certificates/declarations

Finish	Code no.
Chrome	31948000

Focus Single lever bath mixers for concealed installation for iBox universal

Features of all variants

- 2 functions
- ceramic cartridge
- temperature limitation adjustable
- diverter with automatic resetting
- with silencer
- connection type: basic set
- wall-mounted
- min. operating pressure: 1 bar
- max. operating pressure: 10 bar



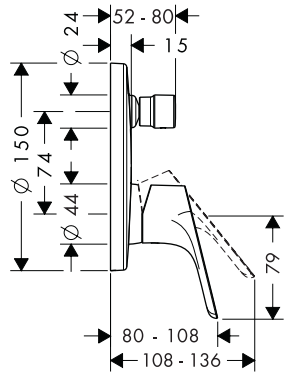

Certificates/declarations

Overview variants

Security combination EN 1717	Max. flow rate at 3 bar (l/min)	Finish	Code no.
–	29	Chrome	31945000
■	25	Chrome	31946000

Required parts (choose one):			Code no.
Option 1		iBox universal 2 Basic set	01500180
+		Adapter plate for iBox universal 2	13588000
Option 2		iBox universal Basic set	01800180

Measurements within scale drawings are in mm.
Technical specifications and units of measure are subject to change.

Focus Single lever bath mixer for concealed installation

Features

- 2 functions
- maximum flow rate at 3 bar: 30,7 l/min
- flow rate for bath spout at 3 bar: 30,7 l/min
- flow rate of hand shower at 3 bar: 27,4 l/min
- ceramic cartridge
- temperature limitation adjustable
- diverter with automatic resetting
- connection type: basic set
- wall-mounted
- min. operating pressure: 1 bar
- max. operating pressure: 10 bar



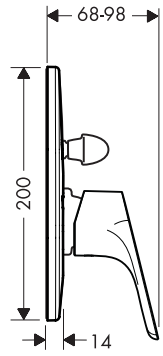

Certificates/declarations

EPD

Finish	Code no.
Chrome	31947000

Required parts:

	Code no.
Basic set for single lever bath mixer for concealed installation	31741180

Focus Single lever bath and shower mixer Monotrou

Features

- 2 functions
- projection: 130 mm
- spray type mixer: normal spray
- maximum flow rate at 3 bar: 20 l/min
- ceramic cartridge
- temperature limitation adjustable
- diverter with automatic resetting
- protected against backflow, according to DIN EN 1717
- suitable for continous flow water heaters
- connection dimension: DN15
- connection type: G ⅜ connections
- installation on bath rim
- min. operating pressure: 1 bar
- max. operating pressure: 10 bar



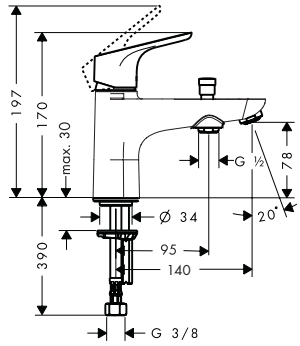

Technologies

AirPower Quick Clean

Finish	Code no.
Chrome	31930000

Measurements within scale drawings are in mm.
Technical specifications and units of measure are subject to change.

Focus Single lever bath and shower mixer Monotrou with 2 flow rates

Features

- 2 functions
- projection: 130 mm
- spray type mixer: normal spray
- maximum flow rate at 3 bar: 20 l/min
- ceramic cartridge with Eco handle position for 2 flow rates
- temperature limitation adjustable
- diverter with automatic resetting
- protected against backflow, according to DIN EN 1717
- suitable for continous flow water heaters
- connection dimension: DN15
- connection type: G ⅜ connections
- installation on bath rim
- no additional maintenance opening required



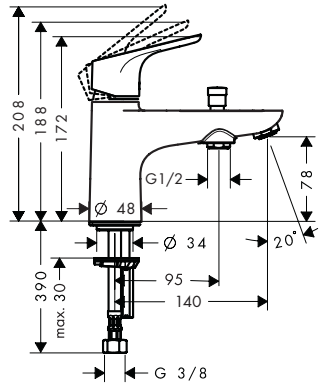

Sustainability

Technologies

Certificates/declarations

Finish	Code no.
Chrome	31938000

Focus Single lever bath mixer Monotrou

Features

- 1 function
- projection: 130 mm
- spray type mixer: normal spray
- maximum flow rate at 3 bar: 20 l/min
- ceramic cartridge
- temperature limitation adjustable
- suitable for continous flow water heaters
- connection dimension: DN15
- connection type: G ⅜ connections
- installation on bath rim
- min. operating pressure: 1 bar
- max. operating pressure: 10 bar



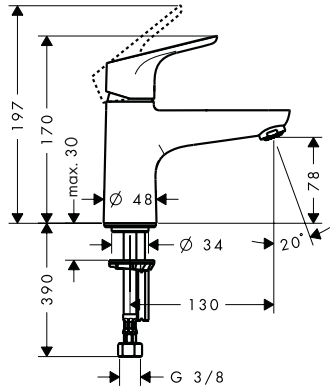

Technologies

Finish	Code no.
Chrome	31931000

Measurements within scale drawings are in mm.
Technical specifications and units of measure are subject to change.

Focus Single lever shower mixer for exposed installation

Features

- 1 function
- centre distance: 150 ± 12 mm
- maximum flow rate at 3 bar: 15 l/min
- flow rate of hand shower at 3 bar: 15 l/min
- ceramic cartridge
- temperature limitation adjustable
- non-return valve
- with silencer
- hose connection DN15
- connection dimension: DN15
- min. operating pressure: 1 bar
- max. operating pressure: 10 bar
- connection type: s-shaped connections



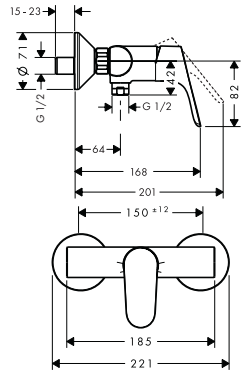

Certificates/declarations

Finish	Code no.
Chrome	31960000

Focus Single lever shower mixer for exposed installation with 2 flow rates

Features

- 1 function
- centre distance: 150 ± 12 mm
- maximum flow rate at 3 bar: 22 l/min
- ceramic cartridge with Eco handle position for a reduced flowrate by up to 50%
- temperature limitation adjustable
- non-return valve
- with silencer
- hose connection DN15
- connection dimension: DN15
- min. operating pressure: 1 bar
- max. operating pressure: 10 bar
- connection type: s-shaped connections



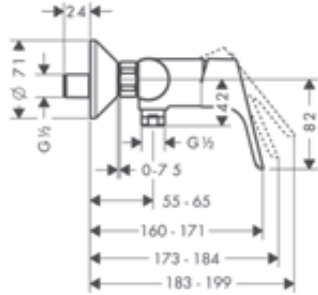

Sustainability

Eco Selection

Certificates/declarations

Finish	Code no.
Chrome	31968000

Focus Single lever shower mixer for exposed installation with extra long handle 12,1 cm

Features

- larger print for greater clarity
- with extra long barrier-free handle
- 1 function
- centre distance: 150 ± 12 mm
- maximum flow rate at 3 bar: 28 l/min
- flow rate of hand shower at 3 bar: 17 l/min
- ceramic cartridge
- temperature limitation adjustable
- non-return valve
- with silencer
- hose connection DN15
- connection dimension: DN15
- connection type: s-shaped connections



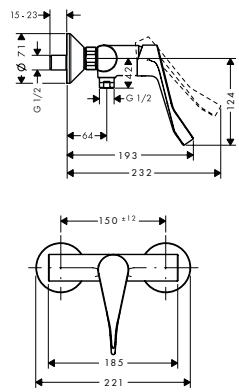

Finish	Code no.
Chrome	31916000

Measurements within scale drawings are in mm.
Technical specifications and units of measure are subject to change.

Long swivel spout 30 cm

Features

- with automatic resetting
- length 300 mm
- for installation on single lever shower mixer
- connection dimension DN15



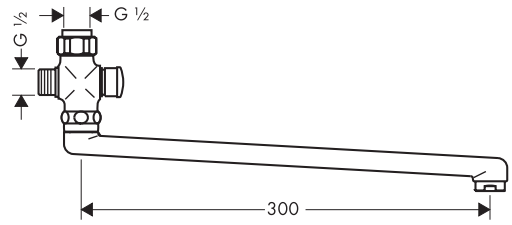

Finish	Code no.
Chrome	14495000

Focus Single lever shower mixer for concealed installation for iBox universal

Features

- 1 function
- maximum flow rate at 3 bar: 29,3 l/min
- ceramic cartridge
- temperature limitation adjustable
- min. operating pressure: 1 bar
- max. operating pressure: 10 bar
- connection type: basic set



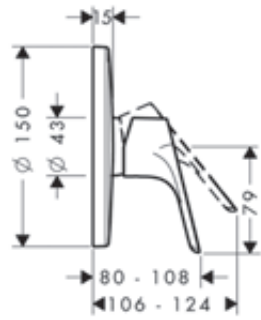

Certificates/declarations

Finish	Code no.
Chrome	31965000

Required parts (choose one):			Code no.
Option 1		iBox universal 2 Basic set	01500180
+		Adapter plate for iBox universal 2	13588000
Option 2		iBox universal Basic set	01800180

Measurements within scale drawings are in mm.
Technical specifications and units of measure are subject to change.

Focus Single lever shower mixer HighFlow for concealed installation for iBox universal

Features

- 1 function
- maximum flow rate at 3 bar: 49 l/min
- ceramic cartridge (Highflow)
- temperature limitation adjustable
- connection dimension: DN15
- min. operating pressure: 1 bar
- max. operating pressure: 10 bar
- connection type: basic set



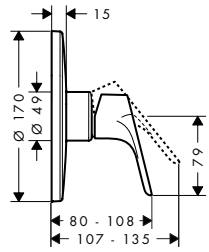

Finish	Code no.
Chrome	31964000

Required parts (choose one):			Code no.
Option 1		iBox universal 2 Basic set	01500180
+		Adapter plate for iBox universal 2	13588000
Option 2		iBox universal Basic set	01800180

Focus Single lever shower mixer for concealed installation

Features

- 1 function
- maximum flow rate at 3 bar: 28,7 l/min
- min. operating pressure: 1 bar
- max. operating pressure: 10 bar
- connection type: basic set



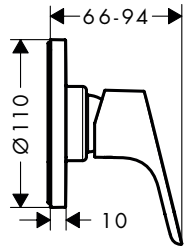

Certificates/declarations

Finish	Code no.
Chrome	31961000

Required parts:		Code no.
	Basic set for single lever shower mixer for concealed installation	13620180

Measurements within scale drawings are in mm.
Technical specifications and units of measure are subject to change.



Rebris

Rebris S Single lever basin mixers

Features of all variants

- handle variant: lever handle
- spray type: normal spray
- ceramic cartridge
- temperature limitation adjustable
- suitable for continuous flow water heaters
- connection dimension: DN15

80



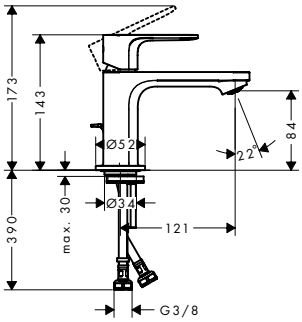

110



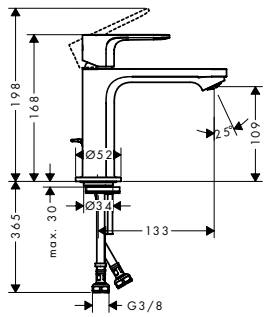

240

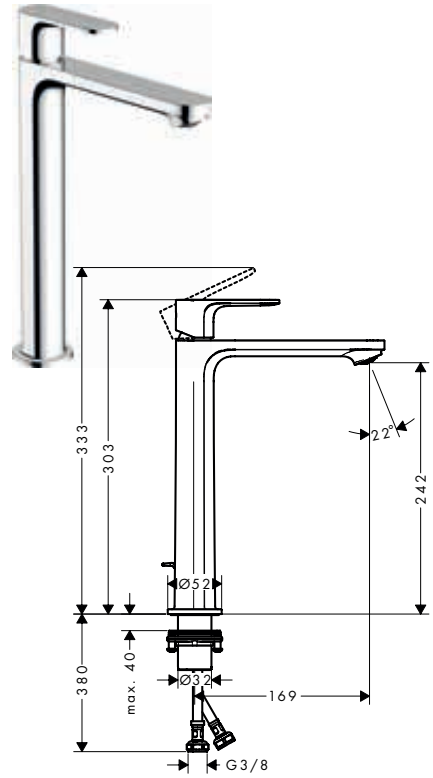

Sustainability

Eco Smart+ · EcoSmart · CoolStart

Technologies

Remove &Clean · AirPower · Comfort Zone

Overview variants

ComfortZone	Projection (mm)	Spout height (mm)	Waste set	Material waste set	CoolStart	For wash bowls	Max. flow rate at 3 bar (l/min)	Finish	Code no.
80	121	84	pop-up	synthetic	■	–	4	Chrome	72586000
								Matt Black	72586670
80	121	84	pop-up	synthetic	■	–	5	Chrome	72513000
								Matt Black	72513670
80	121	84	pop-up	metal	■	–	5	Chrome	72584000
								Matt Black	72584670
80	121	84	without	–	■	–	5	Chrome	72514000
80	121	84	pop-up	synthetic	–	–	5	Chrome	72510000
110	133	109	pop-up	synthetic	■	–	4	Chrome	72588000
								Matt Black	72588670
110	133	109	pop-up	synthetic	■	–	5	Chrome	72519000
								Matt Black	72519670
110	133	109	pop-up	metal	■	–	5	Chrome	72527000
								Matt Black	72527670
110	133	109	without	–	■	–	5	Chrome	72520000
								Matt Black	72520670
110	133	109	pop-up	synthetic	–	–	5	Chrome	72517000
								Matt Black	72517670
240	169	242	pop-up	synthetic	■	■	4	Chrome	72590000
								Matt Black	72590670
240	169	242	pop-up	synthetic	■	■	5	Chrome	72580000
								Matt Black	72580670
240	169	242	without	–	■	■	5	Chrome	72582000

Measurements within scale drawings are in mm.
Technical specifications and units of measure are subject to change.

Rebris S Single lever basin mixers

Overview variants

ComfortZone	Projection (mm)	Spout height (mm)	Waste set	Material waste set	CoolStart	For wash bowls	Max. flow rate at 3 bar (l/min)	Finish	Code no.
110	133	109	pop-up	synthetic	–		5	Chrome	72517007
								Matt Black	72517677
240	169	242	push-open	synthetic	–	■		Chrome	72523007
								Matt Black	72523677

Rebris S Single lever basin mixer 110 with bidé hand shower and shower hose 160 cm without waste set

Features

- consists of: single lever basin mixer, bidette hand shower, shower holder, shower hose
- ComfortZone 110
- projection: 133 mm
- spout height: 109 mm
- handle variant: lever handle
- spray type: normal spray
- maximum flow rate at 3 bar: 4,7 l/min
- ceramic cartridge
- temperature limitation adjustable
- suitable for continuous flow water heaters
- connection type: G ⅜ connections
- connection dimension: DN15
- EU taxonomy: max. 6 l/min - Substantial Contribution (SC) possible



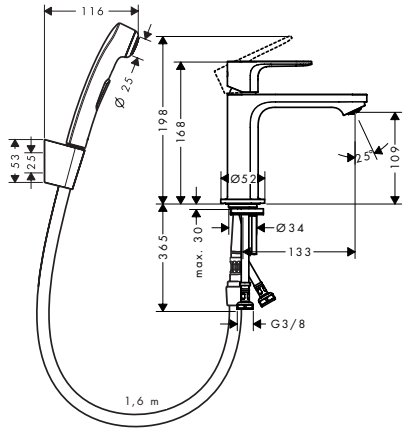

Sustainability

EcoSmart

Technologies

Remove &Clean · AirPower · Comfort Zone

Finish	Code no.
Chrome	72215000
Matt Black	72215670

Rebris S Single lever basin mixer 210 with swivel spout and pop-up waste set

Features

- consists of: single lever basin mixer, waste set
- ComfortZone 210
- projection: 154 mm
- spout height: 222 mm
- handle variant: lever handle
- swivel range 120°
- spray type: normal spray
- maximum flow rate at 3 bar: 5 l/min
- ceramic cartridge
- temperature limitation adjustable
- suitable for continuous flow water heaters
- pop-up waste set G 1¼
- material waste set: synthetic
- connection type: G ⅜ connections
- connection dimension: DN15
- EU taxonomy: max. 6 l/min - Substantial Contribution (SC) possible



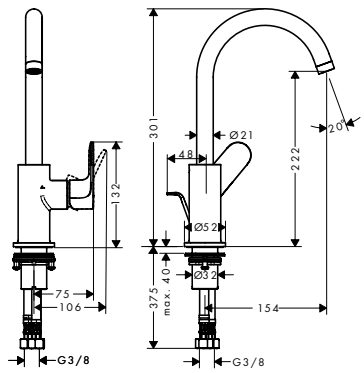

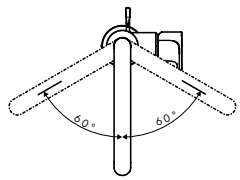

Sustainability

EcoSmart

Technologies

AirPower · Comfort Zone

Finish	Code no.
Chrome	72536000
Matt Black	72536670

Measurements within scale drawings are in mm.
Technical specifications and units of measure are subject to change.

Rebris S Pillar tap 80 with lever handle for cold water or pre-adjusted water without waste set

Features

- ComfortZone 80
- projection: 121 mm
- spout height: 84 mm
- handle variant: lever handle
- spray type: normal spray
- maximum flow rate at 3 bar: 5 l/min
- ceramic cartridge
- for cold water connection
- connection type: G ⅜ connection hose
- connection dimension: DN15
- EU taxonomy: max. 6 l/min - Substantial Contribution (SC) possible



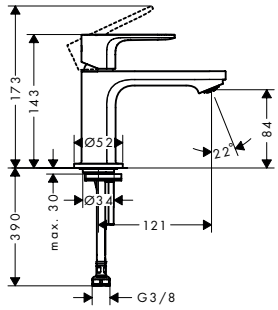

Sustainability

EcoSmart

Technologies

Remove &Clean · AirPower · Comfort Zone

Finish	Code no.
Chrome	72503000
Matt Black	72503670

Rebris S 3-hole basin mixer 110 with pop-up waste set

Features

- consists of: 3-hole basin mixer, waste set
- ComfortZone 110
- projection: 134 mm
- spout height: 107 mm
- handle variant: lever handle
- spray type: normal spray
- maximum flow rate at 3 bar: 5 l/min
- ceramic valves hot/cold 90°
- suitable for continuous flow water heaters
- pop-up waste set G 1¼
- material waste set: synthetic
- connection type: G ⅜ connections
- connection dimension: DN15
- EU taxonomy: max. 6 l/min - Substantial Contribution (SC) possible



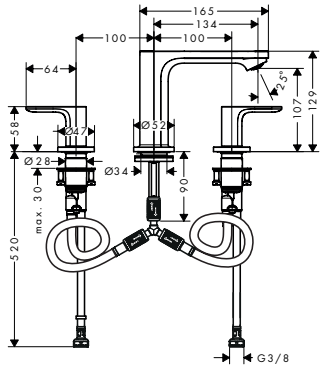

Sustainability

EcoSmart

Technologies

AirPower · Comfort Zone

Finish	Code no.
Chrome	72530000

Measurements within scale drawings are in mm.
Technical specifications and units of measure are subject to change.

Rebris S Single lever basin mixer for concealed installation wall-mounted with spout 20 cm

Features

- consists of: single lever basin mixer for concealed installation wall-mounted, waste set
- projection: 200 mm
- handle variant: lever handle
- spray type: normal spray
- maximum flow rate at 3 bar: 5 l/min
- ceramic cartridge
- temperature limitation adjustable
- suitable for continuous flow water heaters
- non-closing waste set
- material waste set: metal
- connection type: basic set
- connection dimension: DN15
- handle can be positioned on the right or left, depending on the basic set installation
- EU taxonomy: max. 6 l/min - Substantial Contribution (SC) possible



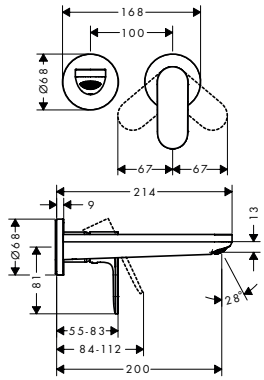

Sustainability

Technologies

Finish	Code no.
Chrome	72528000
Matt Black	72528670

Required parts:

	Code no.
 Basic set for single lever basin mixer for concealed installation wall-mounted	13622180

Rebris S Single lever bath mixer for exposed installation

Features

- 2 functions
- projection: 173 mm
- centre distance: 150 ± 12 mm
- spray type mixer: normal spray
- maximum flow rate at 3 bar: 20,4 l/min
- flow rate for bath spout at 3 bar: 20,4 l/min
- flow rate of hand shower at 3 bar: 15,5 l/min
- ceramic cartridge
- temperature limitation adjustable
- diverter with automatic resetting
- protected against backflow, according to DIN EN 1717
- with silencer
- suitable for continous flow water heaters
- connection dimension: DN15
- connection type: s-shaped connections
- wall-mounted
- min. operating pressure: 1 bar
- max. operating pressure: 10 bar



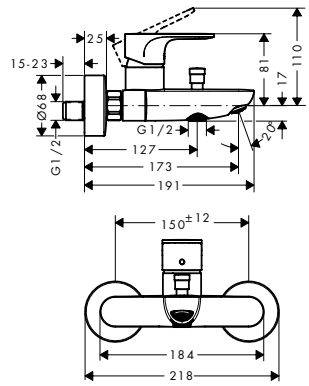

Technologies

Finish	Code no.
Chrome	72440000
Matt Black	72440670

Rebris S Single lever bath mixers for concealed installation for iBox universal

Features of all variants

- 2 functions
- ceramic cartridge
- temperature limitation adjustable
- diverter with automatic resetting
- connection type: basic set
- wall-mounted
- max. operating pressure: 10 bar



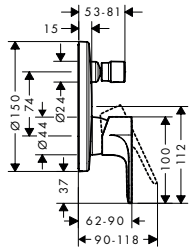

Overview variants

Max. flow rate at 3 bar (l/min)	Finish	Code no.
27.6	Chrome	72466000
	Matt Black	72466670
20	Chrome	72466007
	Matt Black	72466677

Required parts:	For	Code no.
Basic set for single lever bath mixer for concealed installation	72466CHN	71465187

Required parts (choose one):		For	Code no.
Option 1	iBox universal 2 Basic set	72466XXX	01500180
+	Adapter plate for iBox universal 2	72466XXX	13588000
Option 2	iBox universal Basic set	72466XXX	01800180

Rebris S Single lever bath mixer for concealed installation

Features

- 2 functions
- maximum flow rate at 3 bar: 30,7 l/min
- flow rate for bath spout at 3 bar: 30,7 l/min
- flow rate of hand shower at 3 bar: 27,4 l/min
- diverter with automatic resetting
- connection type: basic set
- wall-mounted
- min. operating pressure: 1 bar
- max. operating pressure: 10 bar



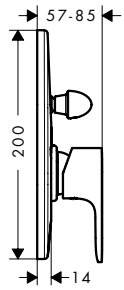

Finish	Code no.
Chrome	72449000
Matt Black	72449670

Required parts:	Code no.
Basic set for single lever bath mixer for concealed installation	31741180

Measurements within scale drawings are in mm.
Technical specifications and units of measure are subject to change.

Rebris S Single lever bath mixer set for concealed installation

Features

- consists of: single lever bath mixer, basic set
- 2 functions
- maximum flow rate at 3 bar: 30,7 l/min
- flow rate for bath spout at 3 bar: 30,7 l/min
- flow rate of hand shower at 3 bar: 27,4 l/min
- ceramic cartridge
- temperature limitation adjustable
- diverter with automatic resetting
- connection type: basic set
- wall-mounted
- min. operating pressure: 1 bar
- max. operating pressure: 10 bar



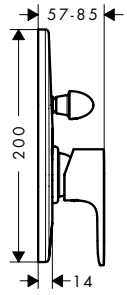

Finish	Code no.
Chrome	72448000
Matt Black	72448670

Consisting of:		Included in	Code no.
	Rebris S Single lever bath mixer for concealed installation	72448XXX	72449XXX
	Basic set for single lever bath mixer for concealed installation	72448XXX	31741180

Rebris S Bath spout

Features

- connection type: G ½
- with escutcheon
- projection: 200 mm
- wall-mounted
- maximum flow rate at 3 bar: 22 l/min
- spray type: normal spray



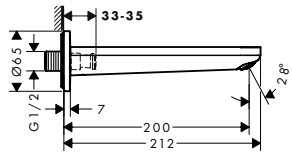

Technologies

AirPower

Finish	Code no.
Chrome	72430000
Matt Black	72430670

Measurements within scale drawings are in mm.
Technical specifications and units of measure are subject to change.

Rebris S 4-hole rim mounted bath mixer

Features

- consists of: 4-hole rim mounted bath mixer, hand shower, shower holder
- 2 functions
- projection: 181 mm
- spray type mixer: normal spray
- spray type hand shower: Rain, IntenseRain
- maximum pull-out length of hand shower: 1.60 m
- flow rate for bath spout at 3 bar: 23,4 l/min
- flow rate of hand shower at 3 bar: 9,4 l/min
- ceramic valves hot/cold 90°
- non-return valve
- suitable for continous flow water heaters
- connection dimension: DN15
- connection type: basic set
- installation on bath rim
- min. operating pressure: 1 bar
- max. operating pressure: 10 bar
- maintenance opening required



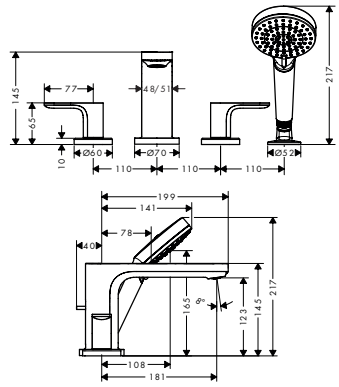

Technologies

AirPower

Spray types

Rain | Intense Rain

Finish	Code no.
Chrome	72444007
Matt Black	72444677

Required parts:

	Code no.
Basic set for 4-hole rim mounted bath mixer	13244187

Rebris S Single lever shower mixer for exposed installation

Features

- 1 function
- centre distance: 150 ± 12 mm
- maximum flow rate at 3 bar: 14,9 l/min
- flow rate of hand shower at 3 bar: 14,9 l/min
- ceramic cartridge
- temperature limitation adjustable
- non-return valve
- with silencer
- hose connection DN15
- connection dimension: DN15
- min. operating pressure: 1 bar
- max. operating pressure: 10 bar
- connection type: s-shaped connections



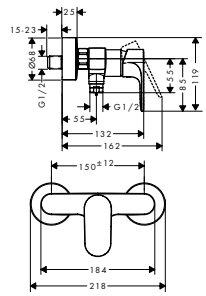

Finish	Code no.
Chrome	72640000
Matt Black	72640670

Rebris S Single lever shower mixers for concealed installation for iBox universal

Features of all variants

- 1 function
- ceramic cartridge
- temperature limitation adjustable
- min. operating pressure: 1 bar
- max. operating pressure: 10 bar
- connection type: basic set



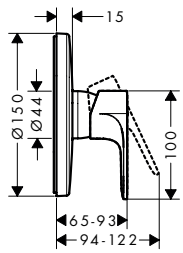

Overview variants

Max. flow rate at 3 bar (l/min)	Finish	Code no.
23.4	Chrome	72667000
	Matt Black	72667670

Measurements within scale drawings are in mm.
Technical specifications and units of measure are subject to change.

Rebris S Single lever shower mixers for concealed installation for iBox universal

Overview variants

	Max. flow rate at 3 bar (l/min)	Finish	Code no.
	10	Chrome	72667007
		Matt Black	72667677

Required parts:		For	Code no.
	Basic set for single lever shower mixer for concealed installation	72667CHN	71651187

Required parts (choose one):			For	Code no.
Option 1		iBox universal 2 Basic set	72667XXX	01500180
+		Adapter plate for iBox universal 2	72667XXX	13588000
Option 2		iBox universal Basic set	72667XXX	01800180

Rebris S Single lever shower mixer for concealed installation

Features

- 1 function
- maximum flow rate at 3 bar: 28,7 l/min
- min. operating pressure: 1 bar
- max. operating pressure: 10 bar
- connection type: basic set



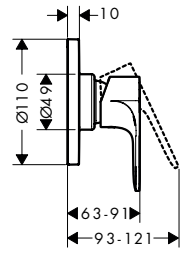

Finish	Code no.
Chrome	72649000
Matt Black	72649670

Required parts:		Code no.
	Basic set for single lever shower mixer for concealed installation	13620180

Rebris S Single lever shower mixer set for concealed installation

Features

- consists of: single lever shower mixer, basic set
- 1 function
- maximum flow rate at 3 bar: 28,7 l/min
- ceramic cartridge
- temperature limitation adjustable
- min. operating pressure: 1 bar
- max. operating pressure: 10 bar
- connection type: basic set



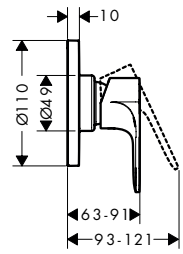

Finish	Code no.
Chrome	72648000
Matt Black	72648670

Consisting of:		Included in	Code no.
	Rebris S Single lever shower mixer for concealed installation	72648XXX	72649XXX
	Basic set for single lever shower mixer for concealed installation	72648XXX	13620180

Measurements within scale drawings are in mm.
Technical specifications and units of measure are subject to change.

Rebris E Single lever basin mixers

Features of all variants

- handle variant: lever handle
- spray type: normal spray
- ceramic cartridge
- temperature limitation adjustable
- suitable for continuous flow water heaters
- connection dimension: DN15

80



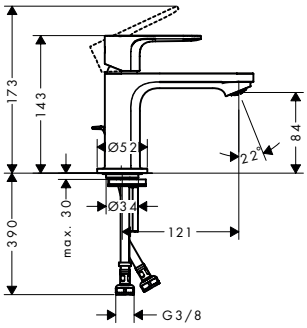

110



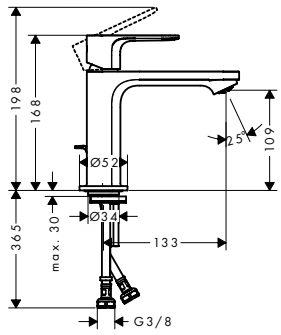

240



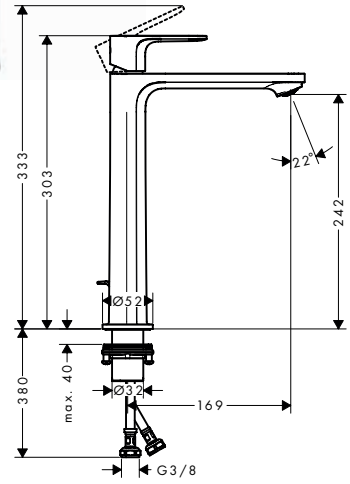

Sustainability

Eco Smart+ · EcoSmart · CoolStart

Technologies

Remove &Clean · AirPower · Comfort Zone

Overview variants

ComfortZone	Projection (mm)	Spout height (mm)	Waste set	Material waste set	CoolStart	For wash bowls	Max. flow rate at 3 bar (l/min)	Finish	Code no.
80	121	84	pop-up	synthetic	■	–	4	Chrome	72587000
								Matt Black	72587670
80	121	84	pop-up	synthetic	■	–	5	Chrome	72553000
								Matt Black	72553670
80	121	84	pop-up	metal	■	–	5	Chrome	72585000
								Matt Black	72585670
80	121	84	without	–	■	–	5	Chrome	72554000
								Matt Black	72554670
80	121	84	pop-up	synthetic	–	–	5	Chrome	72550000
110	133	109	pop-up	synthetic	■	–	4	Chrome	72589000
								Matt Black	72589670
110	133	109	pop-up	synthetic	■	–	5	Chrome	72559000
								Matt Black	72559670
110	133	109	pop-up	metal	■	–	5	Chrome	72551000
								Matt Black	72551670
110	133	109	without	–	■	–	5	Chrome	72560000
								Matt Black	72560670
110	133	109	pop-up	synthetic	–	–	5	Chrome	72557000
								Matt Black	72557670
240	169	242	pop-up	synthetic	■	■	4	Chrome	72591000
								Matt Black	72591670
240	169	242	pop-up	synthetic	■	■	5	Chrome	72581000
								Matt Black	72581670

Measurements within scale drawings are in mm.
Technical specifications and units of measure are subject to change.

Rebris E Single lever basin mixers

Overview variants

ComfortZone	Projection (mm)	Spout height (mm)	Waste set	Material waste set	CoolStart	For wash bowls	Max. flow rate at 3 bar (l/min)	Finish	Code no.
240	169	242	without	–	■	■	5	Chrome	72583000
110	133	109	pop-up	synthetic	■		5	Chrome	72559007
								Matt Black	72559677
240	169	242	push-open	synthetic	–	■		Chrome	72563007
								Matt Black	72563677

Rebris E Single lever basin mixer 210 with swivel spout and pop-up waste set

Features

- consists of: single lever basin mixer, waste set
- ComfortZone 210
- projection: 154 mm
- spout height: 222 mm
- handle variant: lever handle
- swivel range 120°
- spray type: normal spray
- maximum flow rate at 3 bar: 5 l/min
- ceramic cartridge
- temperature limitation adjustable
- suitable for continuous flow water heaters
- pop-up waste set G 1¼
- material waste set: synthetic
- connection type: G ⅜ connections
- connection dimension: DN15
- EU taxonomy: max. 6 l/min - Substantial Contribution (SC) possible



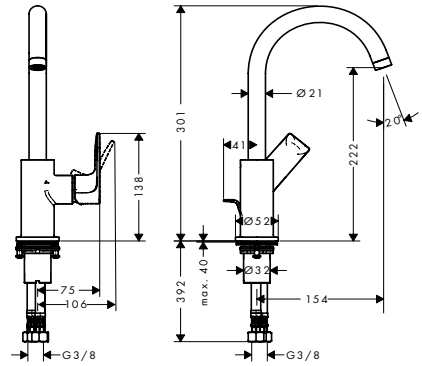

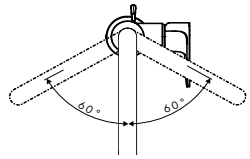

Sustainability

EcoSmart

Technologies

AirPower · Comfort Zone

Finish	Code no.
Chrome	72576000
Matt Black	72576670

Rebris E Pillar tap 80 with lever handle for cold water or pre-adjusted water without waste set

Features

- ComfortZone 80
- projection: 121 mm
- spout height: 84 mm
- handle variant: lever handle
- spray type: normal spray
- maximum flow rate at 3 bar: 5 l/min
- ceramic cartridge
- for cold water connection
- connection type: G ⅜ connection hose
- connection dimension: DN15
- EU taxonomy: max. 6 l/min - Substantial Contribution (SC) possible



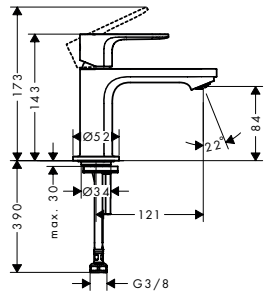

Sustainability

EcoSmart

Technologies

Remove &Clean · AirPower · Comfort Zone

Finish	Code no.
Chrome	72506000
Matt Black	72506670

Measurements within scale drawings are in mm.
Technical specifications and units of measure are subject to change.

Rebris E Single lever basin mixer for concealed installation wall-mounted with spout 20 cm

Features

- consists of: single lever basin mixer for concealed installation wall-mounted, waste set
- projection: 200 mm
- handle variant: lever handle
- spray type: normal spray
- maximum flow rate at 3 bar: 5 l/min
- ceramic cartridge
- temperature limitation adjustable
- suitable for continuous flow water heaters
- non-closing waste set
- material waste set: metal
- connection type: basic set
- connection dimension: DN15
- handle can be positioned on the right or left, depending on the basic set installation
- EU taxonomy: max. 6 l/min - Substantial Contribution (SC) possible



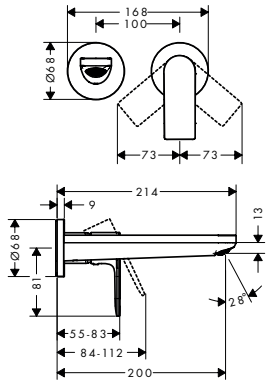

Sustainability

EcoSmart

Technologies

AirPower

Finish	Code no.
Chrome	72568000
Matt Black	72568670

Required parts:

	Code no.
 Basic set for single lever basin mixer for concealed installation wall-mounted	13622180

Rebris E Single lever bath mixer for exposed installation

Features

- 2 functions
- projection: 182 mm
- centre distance: 150 ± 12 mm
- spray type mixer: normal spray
- maximum flow rate at 3 bar: 20,4 l/min
- flow rate for bath spout at 3 bar: 20,4 l/min
- flow rate of hand shower at 3 bar: 15,5 l/min
- ceramic cartridge
- temperature limitation adjustable
- diverter with automatic resetting
- protected against backflow, according to DIN EN 1717
- with silencer
- suitable for continous flow water heaters
- connection dimension: DN15
- connection type: s-shaped connections
- wall-mounted
- min. operating pressure: 1 bar
- max. operating pressure: 10 bar



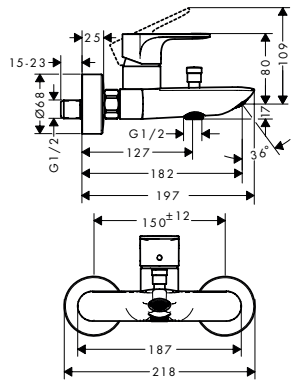

Technologies

AirPower

Finish	Code no.
Chrome	72450000
Matt Black	72450670

Measurements within scale drawings are in mm.
Technical specifications and units of measure are subject to change.

Rebris E Single lever bath mixers for concealed installation for iBox universal

Features of all variants

- 2 functions
- ceramic cartridge
- temperature limitation adjustable
- non-return valve
- connection type: basic set
- wall-mounted
- max. operating pressure: 10 bar



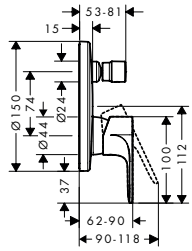

Overview variants

Max. flow rate at 3 bar (l/min)	Finish	Code no.
27.6	Chrome	72468000
	Matt Black	72468670
20	Chrome	72468007
	Matt Black	72468677

Required parts:	For	Code no.
 Basic set for single lever bath mixer for concealed installation	72468CHN	71465187

Required parts (choose one):		For	Code no.
Option 1	 iBox universal 2 Basic set	72468XXX	01500180
+	 Adapter plate for iBox universal 2	72468XXX	13588000
Option 2	 iBox universal Basic set	72468XXX	01800180

Rebris E Single lever bath mixer for concealed installation

Features

- 2 functions
- maximum flow rate at 3 bar: 30,7 l/min
- flow rate for bath spout at 3 bar: 30,7 l/min
- flow rate of hand shower at 3 bar: 27,4 l/min
- diverter with automatic resetting
- connection type: basic set
- wall-mounted
- min. operating pressure: 1 bar
- max. operating pressure: 10 bar



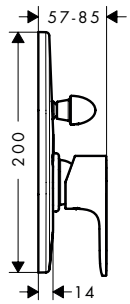

Finish	Code no.
Chrome	72459000
Matt Black	72459670

Required parts:	Code no.
 Basic set for single lever bath mixer for concealed installation	31741180

Measurements within scale drawings are in mm.
Technical specifications and units of measure are subject to change.

Rebris E Single lever bath mixer set for concealed installation

Features

- consists of: single lever bath mixer, basic set
- 2 functions
- maximum flow rate at 3 bar: 30,7 l/min
- flow rate for bath spout at 3 bar: 30,7 l/min
- flow rate of hand shower at 3 bar: 27,4 l/min
- ceramic cartridge
- temperature limitation adjustable
- diverter with automatic resetting
- connection type: basic set
- wall-mounted
- min. operating pressure: 1 bar
- max. operating pressure: 10 bar



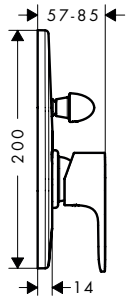

Finish	Code no.
Chrome	72458000
Matt Black	72458670

Consisting of:		Included in	Code no.
	Rebris E Single lever bath mixer for concealed installation	72458XXX	72459XXX
	Basic set for single lever bath mixer for concealed installation	72458XXX	31741180

Rebris E Bath spout

Features

- connection type: G ½
- with escutcheon
- projection: 200 mm
- wall-mounted
- maximum flow rate at 3 bar: 22 l/min
- spray type: normal spray



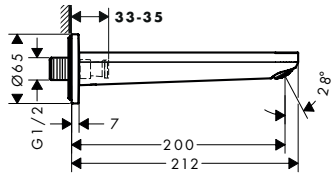

Technologies

AirPower

Finish	Code no.
Chrome	72431000
Matt Black	72431670

Measurements within scale drawings are in mm.
Technical specifications and units of measure are subject to change.

Rebris E 4-hole rim mounted bath mixer

Features

- consists of: 4-hole rim mounted bath mixer, hand shower, shower holder
- 2 functions
- projection: 181 mm
- spray type mixer: normal spray
- spray type hand shower: Rain, IntenseRain
- maximum pull-out length of hand shower: 1.60 m
- flow rate for bath spout at 3 bar: 23,4 l/min
- flow rate of hand shower at 3 bar: 9,4 l/min
- ceramic valves hot/cold 90°
- non-return valve
- suitable for continous flow water heaters
- connection dimension: DN15
- connection type: basic set
- installation on bath rim
- min. operating pressure: 1 bar
- max. operating pressure: 10 bar
- maintenance opening required



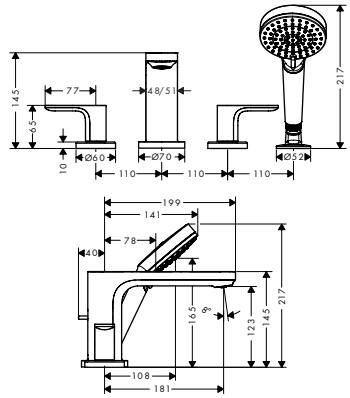

Technologies

AirPower

Spray types

Rain | Intense Rain

Finish	Code no.
Chrome	72454007
Matt Black	72454677

Required parts:	Code no.
Basic set for 4-hole rim mounted bath mixer	13244187

Rebris E Single lever shower mixer for exposed installation

Features

- 1 function
- centre distance: 150 ± 12 mm
- maximum flow rate at 3 bar: 28 l/min
- flow rate of hand shower at 3 bar: 17 l/min
- ceramic cartridge
- temperature limitation adjustable
- non-return valve
- with silencer
- hose connection DN15
- connection dimension: DN15
- min. operating pressure: 1 bar
- max. operating pressure: 10 bar
- connection type: s-shaped connections



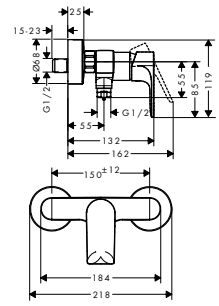

Finish	Code no.
Chrome	72650000
Matt Black	72650670

Rebris E Single lever shower mixers for concealed installation for iBox universal

Features of all variants

- 1 function
- ceramic cartridge
- temperature limitation adjustable
- min. operating pressure: 1 bar
- max. operating pressure: 10 bar
- connection type: basic set



Overview variants

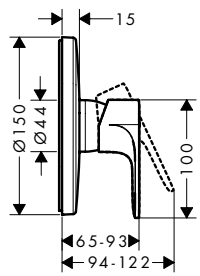

Max. flow rate at 3 bar (l/min)	Finish	Code no.
23.4	Chrome	72668000
	Matt Black	72668670

For more information about this product, please see the next page.

Measurements within scale drawings are in mm.
Technical specifications and units of measure are subject to change.

Rebris E Single lever shower mixers for concealed installation for iBox universal

Overview variants

	Max. flow rate at 3 bar (l/min)	Finish	Code no.
	10	Chrome	72668007
		Matt Black	72668677

Required parts:		For	Code no.
	Basic set for single lever shower mixer for concealed installation	72668CHN	71651187

Required parts (choose one):			For	Code no.
Option 1		iBox universal 2 Basic set	72668XXX	01500180
+		Adapter plate for iBox universal 2	72668XXX	13588000
Option 2		iBox universal Basic set	72668XXX	01800180

Rebris E Single lever shower mixer for concealed installation

Features

- 1 function
- maximum flow rate at 3 bar: 28,7 l/min
- min. operating pressure: 1 bar
- max. operating pressure: 10 bar
- connection type: basic set



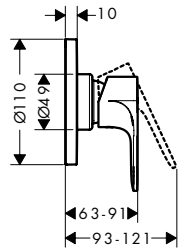

Finish	Code no.
Chrome	72659000
Matt Black	72659670

Required parts:		Code no.
	Basic set for single lever shower mixer for concealed installation	13620180

Rebris E Single lever shower mixer set for concealed installation

Features

- consists of: single lever shower mixer, basic set
- 1 function
- maximum flow rate at 3 bar: 28,7 l/min
- ceramic cartridge
- temperature limitation adjustable
- min. operating pressure: 1 bar
- max. operating pressure: 10 bar
- connection type: basic set



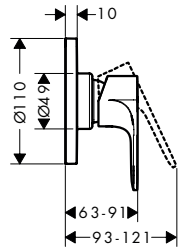

Finish	Code no.
Chrome	72658000
Matt Black	72658670

Consisting of:		Included in	Code no.
	Rebris E Single lever shower mixer for concealed installation	72658XXX	72659XXX
	Basic set for single lever shower mixer for concealed installation	72658XXX	13620180

Measurements within scale drawings are in mm.
Technical specifications and units of measure are subject to change.



Logis

Logis Single lever basin mixers

Features of all variants

- handle variant: lever handle
- spray type: normal spray
- maximum flow rate at 3 bar: 5 l/min
- ceramic cartridge
- temperature limitation adjustable
- suitable for continuous flow water heaters
- connection type: G ⅜ connections
- connection dimension: DN15
- EU taxonomy: max. 6 l/min - Substantial Contribution (SC) possible

70



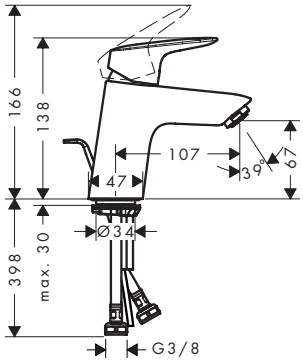

100



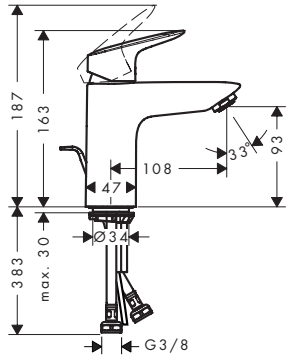

190



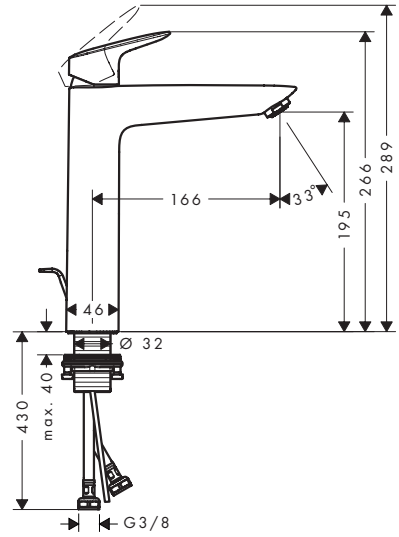

Sustainability

EcoSmart, CoolStart

Technologies

AirPower, Comfort Zone

Certificates/declarations

EPD

Overview variants

ComfortZone	Projection (mm)	Spout height (mm)	Waste set	Material waste set	CoolStart	Finish	Code no.
70	107	67	pop-up	synthetic	■	Chrome	71072000
70	107	67	without	–	■	Chrome	71073000
70	107	67	pop-up	synthetic	–	Chrome	71070000
70	107	67	pop-up	metal	–	Chrome	71170000
70	107	67	push-open	synthetic	–	Chrome	71077000
70	107	67	without	–	–	Chrome	71071000
100	108	93	pop-up	synthetic	■	Chrome	71102000
100	108	93	without	–	■	Chrome	71103000
100	108	93	pop-up	synthetic	–	Chrome	71100000
100	108	93	pop-up	metal	–	Chrome	71171000
100	108	93	push-open	synthetic	–	Chrome	71107000
100	108	93	without	–	–	Chrome	71101000
190	166	195	pop-up	synthetic	–	Chrome	71090000
190	166	195	without	–	–	Chrome	71091000

Measurements within scale drawings are in mm.
Technical specifications and units of measure are subject to change.

Logis Single lever basin mixers LowFlow

Features of all variants

- consists of: single lever basin mixer, waste set
- handle variant: lever handle
- spray type: normal spray
- maximum flow rate at 3 bar: 3,5 l/min
- ceramic cartridge
- temperature limitation adjustable
- suitable for continuous flow water heaters
- pop-up waste set G 1¼
- material waste set: synthetic
- connection type: G ⅜ connections
- connection dimension: DN15

70



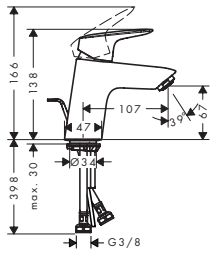

100



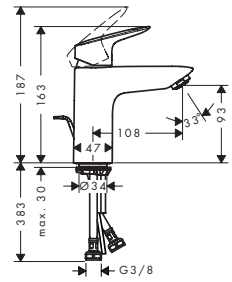

Sustainability

EcoSmart

Technologies

AirPower | Comfort Zone

Overview variants

ComfortZone	Projection (mm)	Spout height (mm)	Finish	Code no.
70	107	67	Chrome	71078000
100	108	93	Chrome	71104000

Logis Single lever basin mixers with 2 flow rates

Features of all variants

- handle variant: lever handle
- spray type: normal spray
- maximum flow rate at 3 bar: 9,5 l/min
- ceramic cartridge with Eco handle position for 2 flow rates
- temperature limitation adjustable
- suitable for continuous flow water heaters
- connection type: G ⅜ connections
- connection dimension: DN15

70



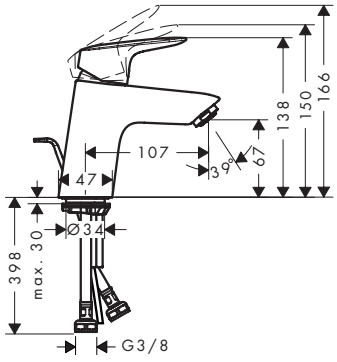

100



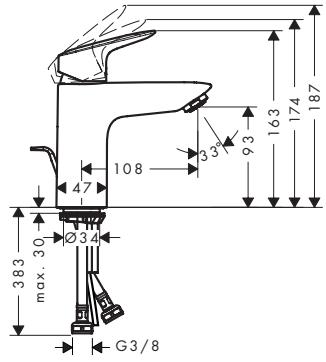

190



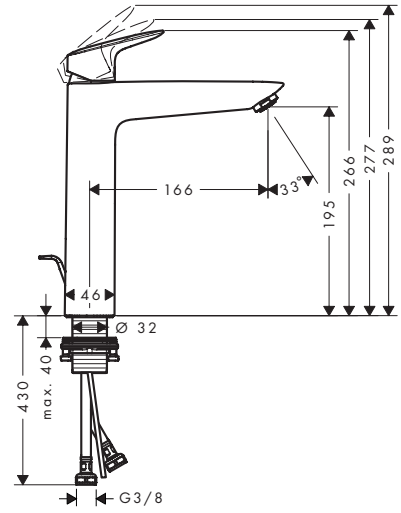

Sustainability

Eco Selection | EcoSmart | CoolStart

Technologies

AirPower | Comfort Zone

Certificates/declarations

EPD

For more information about this product, please see the next page.

Measurements within scale drawings are in mm.
Technical specifications and units of measure are subject to change.

Logis Single lever basin mixers with 2 flow rates

Overview variants

ComfortZone	Projection (mm)	Spout height (mm)	Waste set	Material waste set	CoolStart	Finish	Code no.
70	107	13	pop-up	synthetic	■	Chrome	71075000
70	107	67	without	–	■	Chrome	71076000
100	108	93	pop-up	synthetic	–	Chrome	71105000
190	166	195	pop-up	synthetic	–	Chrome	71095000

Logis Single lever basin mixers Fine

Features of all variants

- handle variant: lever handle
- spray type: normal spray
- maximum flow rate at 3 bar: 5 l/min
- ceramic cartridge
- temperature limitation adjustable
- suitable for continuous flow water heaters
- connection type: G ⅜ connections
- connection dimension: DN15
- EU taxonomy: max. 6 l/min - Substantial Contribution (SC) possible

110



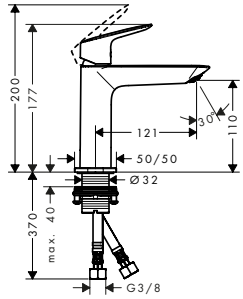

240



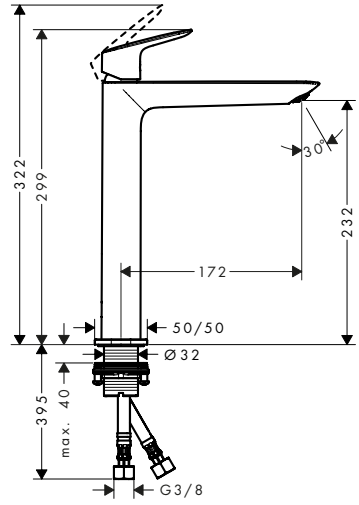

Sustainability

EcoSmart · CoolStart

Technologies

Remove &Clean · AirPower · Comfort Zone

Overview variants

ComfortZone	Projection (mm)	Spout height (mm)	Waste set	Material waste set	CoolStart	For wash bowls	Finish	Code no.
110	121	110	pop-up	synthetic	■	–	Chrome	71254000
110	121	110	without	–	■	–	Chrome	71255000
110	121	110	pop-up	synthetic	–	–	Chrome	71251000
110	121	110	push-open	synthetic	–	–	Chrome	71252000
110	121	110	without	–	–	–	Chrome	71253000
240	172	232	pop-up	synthetic	–	■	Chrome	71257000
240	172	232	without	–	–	■	Chrome	71258000

Measurements within scale drawings are in mm.
Technical specifications and units of measure are subject to change.

Logis Single lever basin mixers with swivel spout

Features of all variants

- ComfortZone 210
- projection: 154 mm
- spout height: 221 mm
- swivel range 120°
- spray type: normal spray
- maximum flow rate at 3 bar: 5 l/min
- ceramic cartridge
- temperature limitation adjustable
- suitable for continuous flow water heaters
- connection type: G ⅜ connections
- connection dimension: DN15
- handle position on the side: bottom-side at the base body (not suitable for wash bowls)
- EU taxonomy: max. 6 l/min - Substantial Contribution (SC) possible



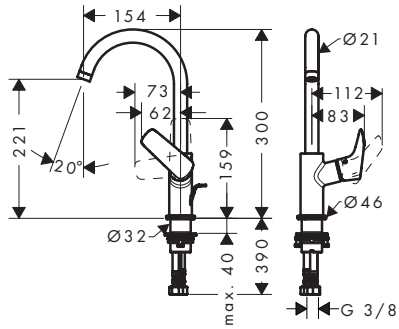

Sustainability

EcoSmart

Technologies

AirPower Comfort Zone

Certificates/declarations

EPD

Overview variants

ComfortZone	Projection (mm)	Spout height (mm)	Waste set	Material waste set	Finish	Code no.
210	154	221	pop-up	synthetic	Chrome	71130000
210	154	221	without	–	Chrome	71131000

Logis 2-handle basin mixers

Features of all variants

- ComfortZone 150
- projection: 145 mm
- spout height: 147 mm
- swivel range 120°
- spray type: normal spray
- maximum flow rate at 3 bar: 5 l/min
- ceramic valves hot/cold 90°
- suitable for continuous flow water heaters
- connection type: G ⅜ connections
- connection dimension: DN15
- EU taxonomy: max. 6 l/min - Substantial Contribution (SC) possible



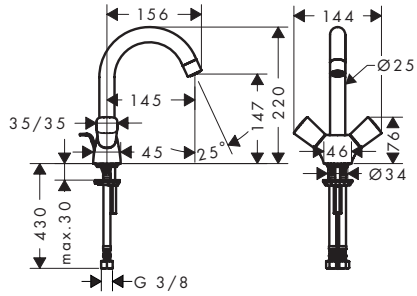

Sustainability

EcoSmart

Technologies

AirPower Comfort Zone

Certificates/declarations

EPD

Overview variants

ComfortZone	Projection (mm)	Spout height (mm)	Waste set	Material waste set	Finish	Code no.
150	145	147	pop-up	synthetic	Chrome	71222000
150	145	147	without	–	Chrome	71221000

Measurements within scale drawings are in mm.
Technical specifications and units of measure are subject to change.

Logis Pillar tap 80 for cold water or pre-adjusted water without waste set

Features

- ComfortZone 80
- projection: 84 mm
- spout height: 79 mm
- spray type: normal spray
- maximum flow rate at 3 bar: 5 l/min
- ceramic valves 90°
- for cold water connection
- connection type: G ⅜ connection hose
- connection dimension: DN15
- EU taxonomy: max. 6 l/min - Substantial Contribution (SC) possible



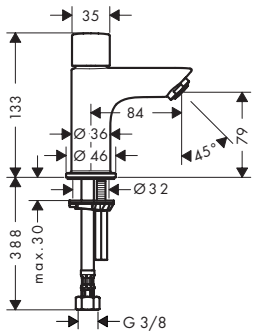

Sustainability

EcoSmart

Technologies

AirPower Comfort Zone

Certificates/declarations

EPD

Finish	Code no.
Chrome	71120000

Logis 3-hole basin mixer 150 with pop-up waste set

Features

- consists of: 3-hole basin mixer, waste set
- ComfortZone 150
- projection: 109 mm
- spout height: 153 mm
- maximum flow rate at 3 bar: 5 l/min
- ceramic valves hot/cold 90°
- suitable for continuous flow water heaters
- pop-up waste set G 1¼
- material waste set: synthetic
- connection type: G ⅜ connections
- connection dimension: DN15
- EU taxonomy: max. 6 l/min - Substantial Contribution (SC) possible



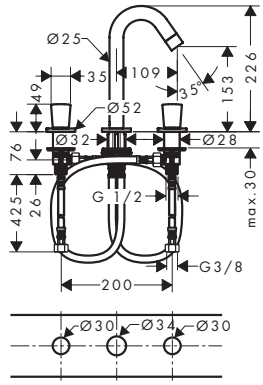

Sustainability

EcoSmart

Technologies

AirPower Comfort Zone

Finish	Code no.
Chrome	71133000

Measurements within scale drawings are in mm.
Technical specifications and units of measure are subject to change.

Logis Single lever basin mixer for concealed installation wall-mounted with spout 19,5 cm

Features

- consists of: single lever basin mixer for concealed installation wall-mounted, waste set
- projection: 195 mm
- handle variant: lever handle
- spray type: normal spray
- maximum flow rate at 3 bar: 5 l/min
- ceramic cartridge
- temperature limitation adjustable
- suitable for continuous flow water heaters
- non-closing waste set
- material waste set: metal
- connection type: basic set
- connection dimension: DN15
- handle can be positioned on the right or left, depending on the basic set installation
- EU taxonomy: max. 6 l/min - Substantial Contribution (SC) possible



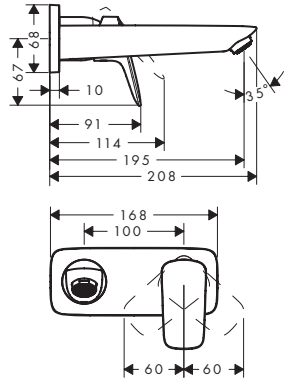

Sustainability

Technologies

Certificates/declarations

Finish	Code no.
Chrome	71220000

Required parts: Code no.



Basic set for single lever basin mixer for concealed installation wall-mounted 13622180

Logis Single lever basin mixer for concealed installation Fine wall-mounted with spout 20,6 cm

Features

- consists of: single lever basin mixer for concealed installation wall-mounted, waste set
- projection: 206 mm
- handle variant: lever handle
- spray type: normal spray
- maximum flow rate at 3 bar: 5 l/min
- ceramic cartridge
- temperature limitation adjustable
- suitable for continuous flow water heaters
- non-closing waste set
- material waste set: metal
- connection type: basic set
- connection dimension: DN15
- handle can be positioned on the right or left, depending on the basic set installation
- EU taxonomy: max. 6 l/min - Substantial Contribution (SC) possible



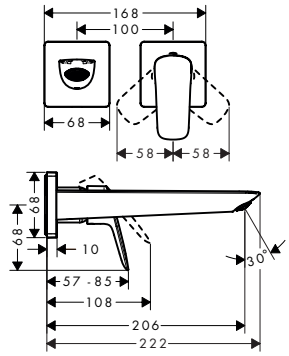

Sustainability

Technologies

Finish	Code no.
Chrome	71256000

Required parts: Code no.



Basic set for single lever basin mixer for concealed installation wall-mounted 13622180

Measurements within scale drawings are in mm.
Technical specifications and units of measure are subject to change.

Logis Single lever basin mixer for exposed installation wall-mounted

Features

- projection: 194 mm
- handle variant: lever handle
- centre distance: 150 ± 12 mm
- spray type: normal spray
- maximum flow rate at 3 bar: 5 l/min
- ceramic cartridge
- temperature limitation adjustable
- with noise reduction
- suitable for continuous flow water heaters
- connection type: G ½
- connection dimension: DN15
- EU taxonomy: max. 6 l/min - Substantial Contribution (SC) possible



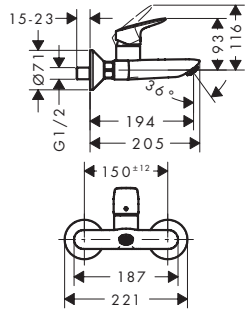

Sustainability

EcoSmart

Technologies

AirPower
Quick Clean

Certificates/declarations

EPD

Finish	Code no.
Chrome	71225000

Logis Single lever bidet mixers

Features of all variants

- consists of: single lever bidet mixer, waste set
- projection: 119 mm
- spout height: 71 mm
- aerator with ball pivot
- spray type: normal spray
- maximum flow rate at 3 bar: 7,2 l/min
- ceramic cartridge
- temperature limitation adjustable
- suitable for continous flow water heaters
- pop-up waste set G 1¼
- connection type: G ⅜ connections
- connection dimension: DN15

70



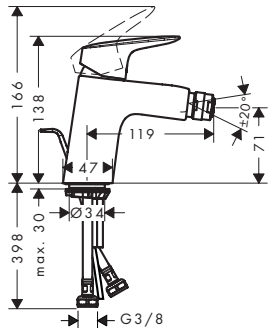

Technologies

AirPower
Comfort Zone

Certificates/declarations

EPD

Overview variants

ComfortZone	Projection (mm)	Spout height (mm)	Waste set	Material waste set	Finish	Code no.
70	119	71	pop-up	synthetic	Chrome	71204000
70	119	71	pop-up	metal	Chrome	71203000

Measurements within scale drawings are in mm.
Technical specifications and units of measure are subject to change.

Logis Single lever bidet mixer 110 Fine with pop-up waste set

Features

- consists of: single lever bidet mixer, waste set
- projection: 112 mm
- spout height: 102 mm
- aerator with ball pivot
- spray type: normal spray
- maximum flow rate at 3 bar: 5 l/min
- ceramic cartridge
- temperature limitation adjustable
- suitable for continous flow water heaters
- material waste set: synthetic
- connection type: G ⅜ connections
- connection dimension: DN15
- EU taxonomy: max. 6 l/min - Substantial Contribution (SC) possible



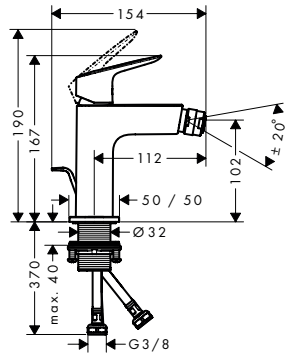

Sustainability

EcoSmart

Technologies

AirPower · Comfort Zone

Finish	Code no.
Chrome	71201000

Logis Single lever basin mixer with bidette hand shower and shower hose 160 cm

Features

- consists of: single lever basin mixer, bidette hand shower, shower holder, shower hose
- ComfortZone 70
- spout height: 67 mm
- handle variant: lever handle
- maximum flow rate at 3 bar: 5 l/min
- ceramic cartridge
- temperature limitation adjustable
- suitable for continuous flow water heaters
- connection type: G ⅜ connections
- connection dimension: DN15
- EU taxonomy: max. 6 l/min - Substantial Contribution (SC) possible



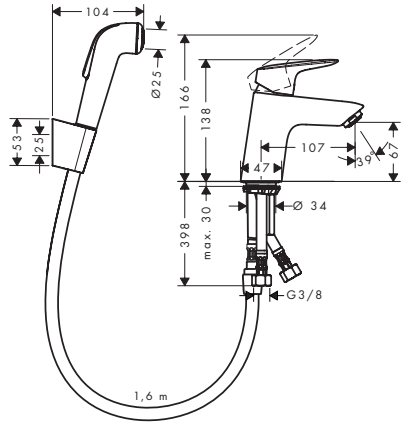

Sustainability

EcoSmart

Technologies

AirPower · Comfort Zone · Quick Clean

Certificates/declarations

EPD

Finish	Code no.
Chrome	71290000

Logis Single lever bath mixers for exposed installation

Features of all variants

- 2 functions
- spray type mixer: normal spray
- maximum flow rate at 3 bar: 20 l/min
- flow rate for bath spout at 3 bar: 20 l/min
- ceramic cartridge
- temperature limitation adjustable
- diverter with automatic resetting
- non-return valve
- with silencer
- suitable for continous flow water heaters
- connection dimension: DN15
- wall-mounted
- min. operating pressure: 1 bar
- max. operating pressure: 10 bar



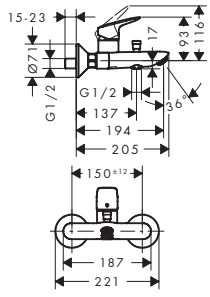



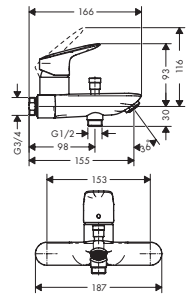

Technologies

AirPower

Certificates/declarations

EPD

For more information about this product, please see the next page.

Measurements within scale drawings are in mm.
Technical specifications and units of measure are subject to change.

Logis Single lever bath mixers for exposed installation

Overview variants

Centre distance (mm)	Finish	Code no.
150 ± 12	Chrome	71400000
153	Chrome	71430000

Logis Single lever bath mixer for exposed installation with 2 flow rates

Features

- 2 functions
- projection: 194 mm
- centre distance: 150 ± 12 mm
- spray type mixer: normal spray
- maximum flow rate at 3 bar: 22 l/min
- ceramic cartridge with Eco handle position for 2 flow rates
- temperature limitation adjustable
- diverter with automatic resetting
- non-return valve
- with silencer
- suitable for continous flow water heaters
- connection dimension: DN15
- connection type: s-shaped connections
- wall-mounted
- min. operating pressure: 1 bar
- max. operating pressure: 10 bar
- no additional maintenance opening required



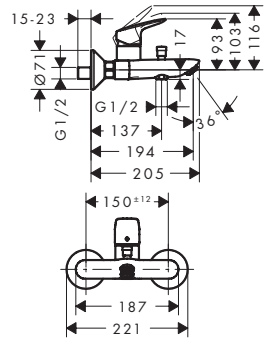

Sustainability

Technologies

Certificates/declarations

Finish	Code no.
Chrome	71401000

Logis Single lever bath mixer with long spout

Features

- 2 functions
- projection: 300 mm
- centre distance: 150 ± 12 mm
- spray type mixer: normal spray
- maximum flow rate at 3 bar: 16 l/min
- flow rate for bath spout at 3 bar: 16 l/min
- flow rate of hand shower at 3 bar: 7,5 l/min
- ceramic cartridge
- temperature limitation adjustable
- diverter with automatic resetting
- suitable for continous flow water heaters
- connection dimension: DN15
- connection type: s-shaped connections
- wall-mounted



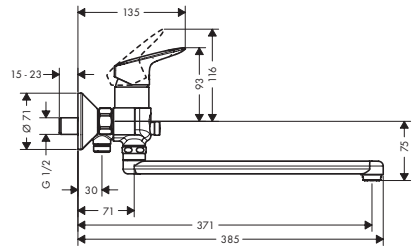

Technologies

Certificates/declarations

Finish	Code no.
Chrome	71402000

Measurements within scale drawings are in mm.
Technical specifications and units of measure are subject to change.

Logis Single lever bath mixer for concealed installation for iBox universal

Features

- 2 functions
- flow rate upper outlet: 21 l/min
- flow rate lower outlet: 29 l/min
- maximum flow rate at 3 bar: 29 l/min
- ceramic cartridge
- temperature limitation adjustable
- diverter with automatic resetting
- connection type: basic set
- wall-mounted
- min. operating pressure: 1 bar
- max. operating pressure: 10 bar



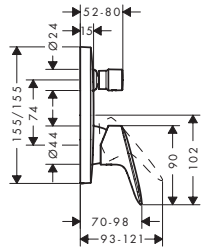

Certificates/declarations

EPD

Finish	Code no.
Chrome	71405000

Required parts (choose one):			Code no.
Option 1		iBox universal 2 Basic set	01500180
	+		
		Adapter plate for iBox universal 2	13588000
Option 2		iBox universal Basic set	01800180

Logis Single lever bath mixer for concealed installation

Features

- 2 functions
- maximum flow rate at 3 bar: 30,7 l/min
- flow rate for bath spout at 3 bar: 30,7 l/min
- flow rate of hand shower at 3 bar: 27,4 l/min
- ceramic cartridge
- temperature limitation adjustable
- diverter with automatic resetting
- connection type: basic set
- wall-mounted
- min. operating pressure: 1 bar
- max. operating pressure: 10 bar



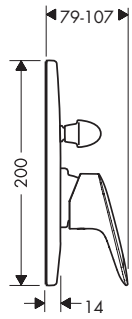

Certificates/declarations

EPD

Finish	Code no.
Chrome	71406000

Required parts:		Code no.
	Basic set for single lever bath mixer for concealed installation	31741180

Measurements within scale drawings are in mm.
Technical specifications and units of measure are subject to change.

Logis Single lever bath mixer set for concealed installation

Features

- consists of: single lever bath mixer, basic set
- 2 functions
- maximum flow rate at 3 bar: 30,7 l/min
- flow rate for bath spout at 3 bar: 30,7 l/min
- flow rate of hand shower at 3 bar: 27,4 l/min
- ceramic cartridge
- connection type: basic set
- wall-mounted
- min. operating pressure: 1 bar
- max. operating pressure: 10 bar



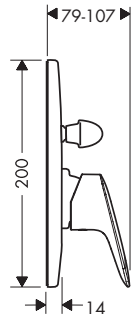

Certificates/declarations

Finish	Code no.
Chrome	71409000

Consisting of:		Included in	Code no.
	Basic set for single lever bath mixer for concealed installation	71409000	31741180
	Logis Single lever bath mixer for concealed installation	71409000	71406000

Logis Bath spout

Features

- 1 function
- connection type: G ¾
- with escutcheon
- projection: 195 mm
- wall-mounted
- maximum flow rate at 3 bar: 21 l/min
- connection dimension: DN20
- spray type: normal spray



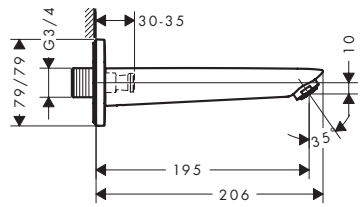

Technologies

AirPower

Certificates/declarations

Finish	Code no.
Chrome	71410000

Optional parts:		Code no.
	Socket for G1/2 connection	95626000

Measurements within scale drawings are in mm.
Technical specifications and units of measure are subject to change.

Logis Single lever bath mixer Monotrou

Features

- 1 function
- projection: 145 mm
- spray type mixer: normal spray
- maximum flow rate at 3 bar: 20 l/min
- ceramic cartridge
- temperature limitation adjustable
- non-return valve
- suitable for continous flow water heaters
- connection dimension: DN15
- connection type: G ⅜ connections
- installation on bath rim
- min. operating pressure: 1 bar
- max. operating pressure: 10 bar



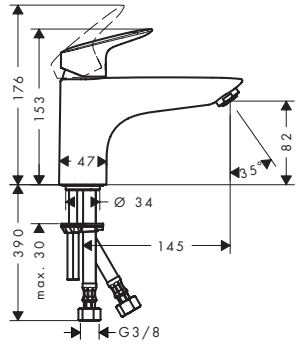

Technologies

AirPower

Certificates/declarations

EPD

Finish	Code no.
Chrome	71311000

Logis Single lever bath and shower mixer Monotrou

Features

- 2 functions
- projection: 145 mm
- spray type mixer: normal spray
- maximum flow rate at 3 bar: 20 l/min
- ceramic cartridge
- temperature limitation adjustable
- diverter with automatic resetting
- suitable for continous flow water heaters
- connection dimension: DN15
- connection type: G ⅜ connections
- installation on bath rim
- min. operating pressure: 1 bar
- max. operating pressure: 10 bar



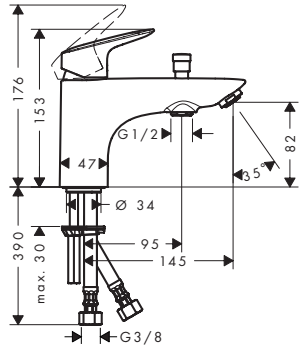

Technologies

AirPower

Certificates/declarations

EPD

Finish	Code no.
Chrome	71312000

Measurements within scale drawings are in mm.
Technical specifications and units of measure are subject to change.

Logis Single lever bath and shower mixer Monotrou with 2 flow rates

Features

- 2 functions
- projection: 145 mm
- spray type mixer: normal spray
- maximum flow rate at 3 bar: 20,5 l/min
- flow rate for bath spout at 3 bar: 20,5 l/min
- flow rate of hand shower at 3 bar: 14,9 l/min
- ceramic cartridge with Eco handle position for 2 flow rates
- temperature limitation adjustable
- diverter with automatic resetting
- non-return valve
- suitable for continous flow water heaters
- connection dimension: DN15
- connection type: G ⅜ connections
- installation on bath rim
- min. operating pressure: 1 bar
- max. operating pressure: 10 bar
- no additional maintenance opening required



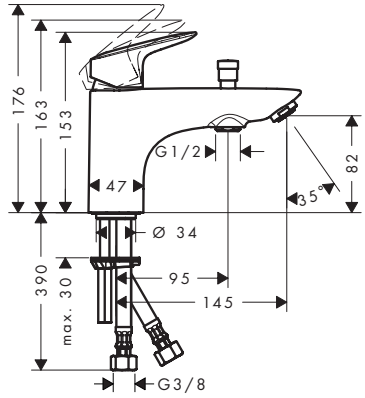

Sustainability

Eco Selection

Technologies

AirPower

Certificates/declarations

EPD

Finish	Code no.
Chrome	71315000

Logis 3-hole rim mounted single lever bath mixer for Secuflex

Features

- consists of: 3-hole rim mounted single lever bath mixer, hand shower, shower holder
- 2 functions
- projection: 111 mm
- spray type mixer: normal spray
- spray type hand shower: Rain
- maximum pull-out length of hand shower: 1.10 m
- maximum flow rate at 3 bar: 18 l/min
- flow rate for bath spout at 3 bar: 18 l/min
- flow rate of hand shower at 3 bar: 15 l/min
- ceramic cartridge
- temperature limitation adjustable
- non-return valve
- connection dimension: DN15
- connection type: basic set
- installation on bath rim



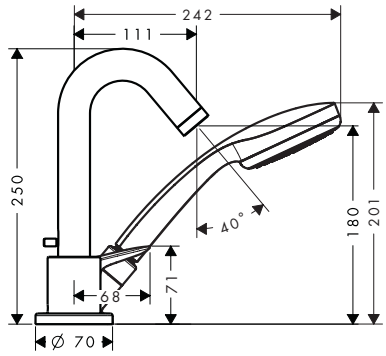

Technologies

AirPower

Spray types

Rain

Finish	Code no.
Chrome	71310000

Consisting of:	Included in	Code no.
Croma 100 Hand shower 1jet	71310000	28580000

Required parts:	Code no.
Basic set for 3-hole rim mounted single lever bath mixer	13437180

Measurements within scale drawings are in mm.
Technical specifications and units of measure are subject to change.

Logis 3-hole rim mounted single lever bath mixer

Features

- consists of: 3-hole rim mounted single lever bath mixer, hand shower
- 2 functions
- projection: 111 mm
- spray type mixer: normal spray
- spray type hand shower: Rain
- maximum pull-out length of hand shower: 1.60 m
- maximum flow rate at 3 bar: 18 l/min
- flow rate for bath spout at 3 bar: 18 l/min
- flow rate of hand shower at 3 bar: 15 l/min
- ceramic cartridge
- temperature limitation adjustable
- connection dimension: DN15
- connection type: basic set
- installation on bath rim
- min. operating pressure: 1 bar
- max. operating pressure: 10 bar



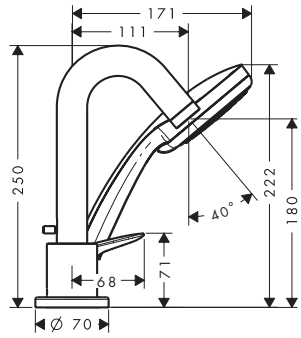

Technologies

AirPower

Spray types

Rain

Finish	Code no.
Chrome	71313000

Consisting of:	Included in	Code no.
Croma 100 Hand shower 1jet	71313000	28580000

Required parts:	Code no.
Basic set for 3-hole rim mounted single lever bath mixer	13439180

Logis 4-hole rim mounted bath mixer

Features

- consists of: 4-hole rim mounted bath mixer, hand shower, shower holder
- 2 functions
- projection: 111 mm
- maximum pull-out length of hand shower: 1.60 m
- maximum flow rate at 3 bar: 20 l/min
- flow rate for bath spout at 3 bar: 20 l/min
- flow rate of hand shower at 3 bar: 14 l/min
- non-return valve
- protected against backflow, according to DIN EN 1717
- connection dimension: DN15
- connection type: basic set
- installation on bath rim
- min. operating pressure: 1 bar
- max. operating pressure: 10 bar



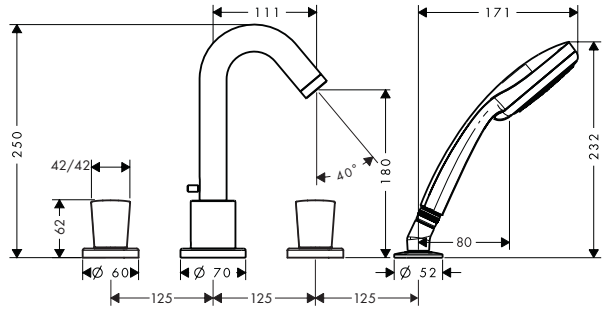

Technologies

AirPower

Finish	Code no.
Chrome	71314000

Consisting of:	Included in	Code no.
Croma 100 Hand shower 1jet	71314000	28580000

Required parts:	Code no.
Basic set for 4-hole rim mounted bath mixer	13244180

Measurements within scale drawings are in mm.
Technical specifications and units of measure are subject to change.

Logis Single lever shower mixer for exposed installation

Features

- 1 function
- centre distance: 150 ± 12 mm
- maximum flow rate at 3 bar: 28 l/min
- flow rate of hand shower at 3 bar: 17 l/min
- ceramic cartridge
- temperature limitation adjustable
- non-return valve
- with silencer
- hose connection DN15
- connection dimension: DN15
- min. operating pressure: 1 bar
- max. operating pressure: 10 bar
- connection type: s-shaped connections



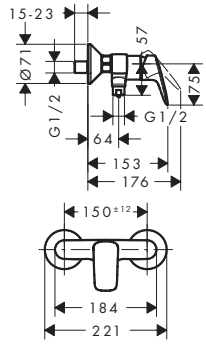

Certificates/declarations

Finish	Code no.
Chrome	71600000

Logis Single lever shower mixer for concealed installation for iBox universal

Features

- 1 function
- maximum flow rate at 3 bar: 29,3 l/min
- ceramic cartridge
- temperature limitation adjustable
- min. operating pressure: 1 bar
- max. operating pressure: 10 bar
- connection type: basic set



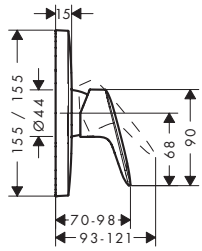

Certificates/declarations

Finish	Code no.
Chrome	71605000

Required parts (choose one):			Code no.
Option 1		iBox universal 2 Basic set	01500180
	+		
		Adapter plate for iBox universal 2	13588000
Option 2		iBox universal Basic set	01800180

Measurements within scale drawings are in mm.
Technical specifications and units of measure are subject to change.

Logis Single lever shower mixer HighFlow for concealed installation for iBox universal

Features

- 1 function
- maximum flow rate at 3 bar: 47 l/min
- ceramic cartridge (Highflow)
- temperature limitation adjustable
- min. operating pressure: 1 bar
- max. operating pressure: 10 bar



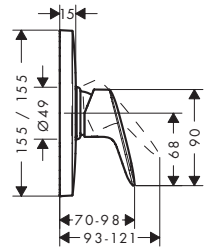

Finish	Code no.
Chrome	71607000

Required parts (choose one):			Code no.
Option 1		iBox universal 2 Basic set	01500180
	+		
		Adapter plate for iBox universal 2	13588000
Option 2		iBox universal Basic set	01800180

Logis Single lever shower mixers for concealed installation

Features of all variants

- 1 function
- maximum flow rate at 3 bar: 28,7 l/min
- min. operating pressure: 1 bar
- max. operating pressure: 10 bar
- connection type: basic set



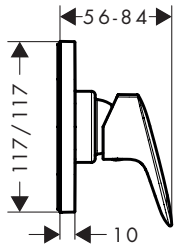



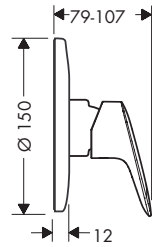

Certificates/declarations

EPD

Overview variants

Shape	Finish	Code no.
softcube	Chrome	71604000
round	Chrome	71606000

Required parts:		Code no.
	Basic set for single lever shower mixer for concealed installation	13620180

Measurements within scale drawings are in mm.
Technical specifications and units of measure are subject to change.

Logis Shower mixer set for concealed installation

Features

- consists of: single lever shower mixer, basic set
- 1 function
- maximum flow rate at 3 bar: 27 l/min
- ceramic cartridge
- connection type: basic set



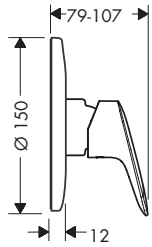

Certificates/declarations

Finish	Code no.
Chrome	71666000

Consisting of:		Included in	Code no.
	Basic set for single lever shower mixer for concealed installation	71666000	13620180
	Logis Single lever shower mixer for concealed installation	71666000	71606000

Logis Shut-off valve for concealed installation

Features

- connection type: DN15/DN20



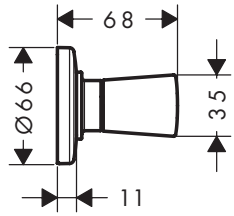

Finish	Code no.
Chrome	71970000

Required parts (choose one):		Code no.
	Basic set 40 l/min for shut-off valve for concealed installation ceramic	15974180
	Basic set 52 l/min for shut-off valve for concealed installation spindle	15973180
	Basic set 130 l/min for shut-off valve for concealed installation spindle	15970180

Optional parts:		Code no.
	Extension set 2.5 cm	96370000

Measurements within scale drawings are in mm.
Technical specifications and units of measure are subject to change.



Vernis

Vernis Blend Single lever basin mixers

Features of all variants

- consists of: single lever basin mixer, waste set
- handle variant: lever handle
- spray type: normal spray
- maximum flow rate at 3 bar: 5 l/min
- ceramic cartridge
- suitable for continuous flow water heaters
- pop-up waste set G 1¼
- material waste set: synthetic
- connection type: G ½ connections
- connection dimension: DN15

70



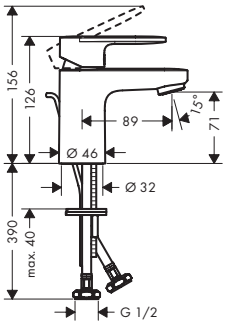

100



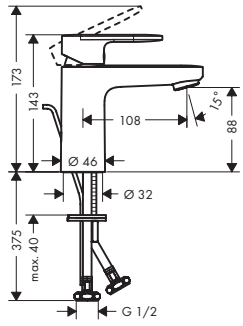

190



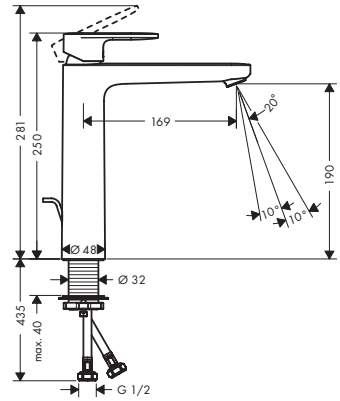

Sustainability

EcoSmart

Technologies

AirPower

Comfort Zone

Overview variants

ComfortZone	Projection (mm)	Spout height (mm)	Waste set	Material waste set	Finish	Code no.
70	89	71	pop-up	synthetic	Matt Black	71550677
100	108	88	pop-up	synthetic	Chrome	71551007
					Matt Black	71551677
190	169	190	pop-up	synthetic	Chrome	71552007
					Matt Black	71552677

Measurements within scale drawings are in mm.
Technical specifications and units of measure are subject to change.

Vernis Blend Singel lever basin mixers with isolated water counduction

Features of all variants

- consists of: single lever basin mixer, waste set
- handle variant: lever handle
- spray type: normal spray
- maximum flow rate at 3 bar: 6 l/min
- ceramic cartridge
- with isolated water conduction - without contact with nickel and lead
- suitable for continuous flow water heaters
- pop-up waste set G 1¼
- material waste set: synthetic
- connection type: G ½ connections
- connection dimension: DN15

70



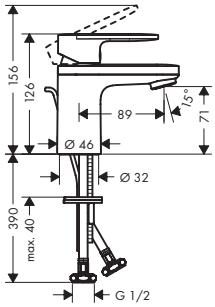

100



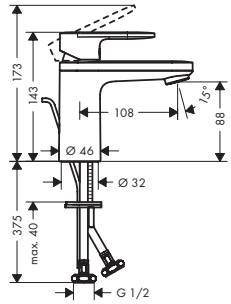

190



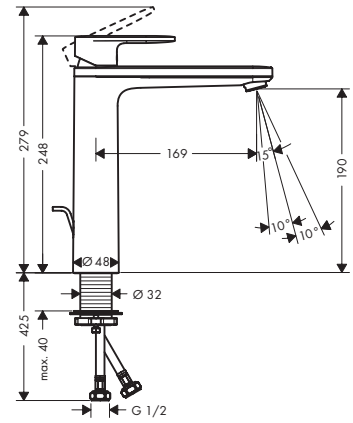

Sustainability

EcoSmart

Technologies

AirPower

Comfort Zone

Overview variants

ComfortZone	Projection (mm)	Spout height (mm)	Waste set	Finish	Code no.
70	89	71	pop-up	Chrome	71570007
100	108	88	pop-up	Chrome	71571007
190	169	190	pop-up	Chrome	71572007

Measurements within scale drawings are in mm.
Technical specifications and units of measure are subject to change.

Vernis Blend Single lever basin mixer with swivel spout and pop-up waste set

Features

- consists of: single lever basin mixer, waste set
- ComfortZone 200
- projection: 166 mm
- spout height: 200 mm
- handle variant: lever handle
- spray type: laminar spray
- maximum flow rate at 3 bar: 5 l/min
- ceramic cartridge
- suitable for continuous flow water heaters
- pop-up waste set G 1¼
- material waste set: synthetic
- connection type: G ½ connections
- connection dimension: DN15



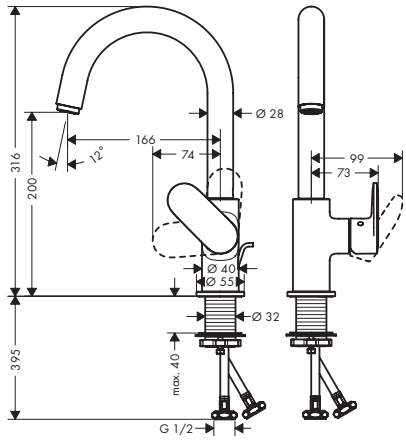

Sustainability

EcoSmart

Technologies

Comfort Zone

Finish	Code no.
Chrome	71554007

Vernis Blend 3-hole basin mixer with pop-up waste set

Features

- consists of: 3-hole basin mixer, waste set
- ComfortZone 150
- projection: 166 mm
- spout height: 151 mm
- handle variant: lever handle
- spray type: laminar spray
- maximum flow rate at 3 bar: 5 l/min
- ceramic valves hot/cold 90°
- suitable for continuous flow water heaters
- pop-up waste set G 1¼
- material waste set: synthetic
- connection type: G ½ connections
- connection dimension: DN15



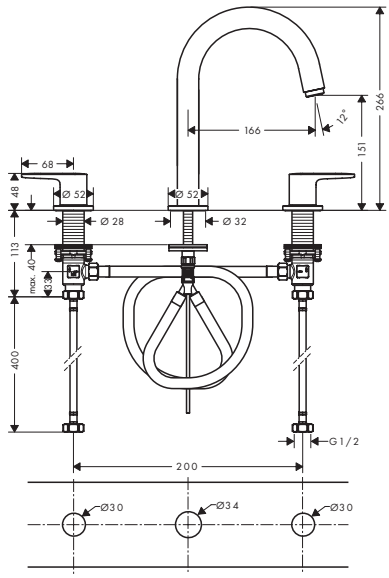

Sustainability

EcoSmart

Technologies

Comfort Zone

Finish	Code no.
Chrome	71553007
Matt Black	71553677

Measurements within scale drawings are in mm.
Technical specifications and units of measure are subject to change.

Vernis Blend Single lever basin mixer for concealed installation wall-mounted with spout 20,4 cm

Features

- projection: 204 mm
- handle variant: lever handle
- spray type: normal spray
- maximum flow rate at 3 bar: 5 l/min
- ceramic cartridge
- suitable for continuous flow water heaters
- connection type: basic set
- connection dimension: DN15
- handle can be positioned on the right or left, depending on the basic set installation



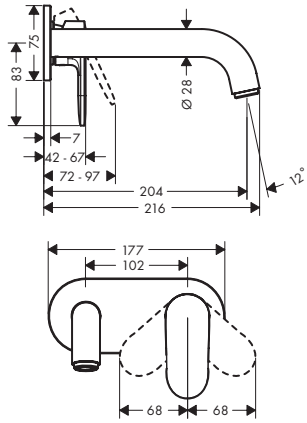

Sustainability

EcoSmart

Technologies

AirPower

Finish	Code no.
Chrome	71576007
Matt Black	71576677

Required parts:		Code no.
	Basic set for single lever basin mixer for concealed installation wall-mounted	71577187

Optional parts:		Finish	Code no.
	Extension set 25 mm	Chrome	71556007

Vernis Blend Basin mixer set for concealed installation wall-mounted with spout 20,4 cm

Features

- consists of: single lever basin mixer for concealed installation wall-mounted, basic set
- projection: 204 mm
- handle variant: lever handle
- spray type: normal spray
- maximum flow rate at 3 bar: 5 l/min
- ceramic cartridge
- suitable for continuous flow water heaters
- connection type: basic set
- connection dimension: DN15
- positioning of the mixer system only possible on the right, spout left



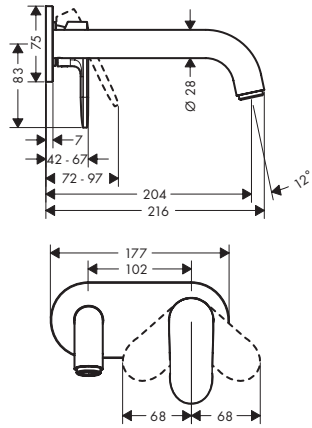

Sustainability

EcoSmart

Technologies

AirPower

Finish	Code no.
Chrome	71555007

Consisting of:		Included in	Code no.
	Vernis Blend Single lever basin mixer for concealed installation wall-mounted with spout 20,4 cm	71555007	71576007
	Basic set for single lever basin mixer for concealed installation wall-mounted	71555007	71577187

For more information about this product, please see the next page.

Measurements within scale drawings are in mm.
Technical specifications and units of measure are subject to change.

Vernis Blend Basin mixer set for concealed installation wall-mounted with spout 20,4 cm

Optional parts:		Finish	Code no.
	Extension set 25 mm	Chrome	71556007

Vernis Blend Electronic basin mixers

Features of all variants

- ComfortZone 100
- projection: 112 mm
- spray type: normal spray
- swiveling spray former
- maximum flow rate at 3 bar: 5,7 l/min
- temperature pre-adjustable
- with isolated water conduction - without contact with nickel and lead
- non-return valve
- infrared sensor technology
- automatic environmental adjustment of infrared sensor
- running time adjustable
- running time: 10 s, 20 s, 30 s
- hygiene rinse activatable (automatic water flow)
- frequency of hygiene rinse: 24 h, 48 h, 72 h
- flushing time hygiene rinse: 10 s, 20 s, 30 s
- permanent rinse activatable (single water flow for 200 seconds, suitable for thermal disinfection)
- cleaning mode: manual water stop for washbasin cleaning
- connection dimension: DN15
- dirt filters in the connection hoses
- frequency of hygiene rinse and flushing time hygiene rinse are dependent on each other (24 h - 10 s, 48 h - 20 s, 72 h - 30 s)



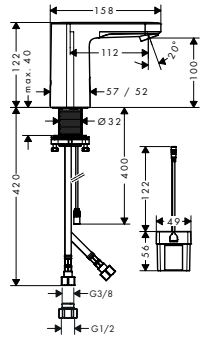

Technologies

Sensor Activation | AirPower | Comfort Zone

Overview variants

Power supply	Finish	Code no.
mains connection	Chrome	71501007
battery operation	Chrome	71502007

Vernis Blend Electronic basin mixers for cold water or pre-adjusted water

Features of all variants

- ComfortZone 100
- projection: 112 mm
- spray type: normal spray
- swiveling spray former
- maximum flow rate at 3 bar: 5,7 l/min
- for cold water or pre-adjusted/conditioned water
- with isolated water conduction - without contact with nickel and lead
- infrared sensor technology
- automatic environmental adjustment of infrared sensor
- running time adjustable
- running time: 10 s, 20 s, 30 s
- hygiene rinse activatable (automatic water flow)
- frequency of hygiene rinse: 24 h, 48 h, 72 h
- flushing time hygiene rinse: 10 s, 20 s, 30 s
- permanent rinse activatable (single water flow for 200 seconds, suitable for thermal disinfection)
- cleaning mode: manual water stop for washbasin cleaning
- connection dimension: DN15
- dirt filter in the connection hose
- frequency of hygiene rinse and flushing time hygiene rinse are dependent on each other (24 h - 10 s, 48 h - 20 s, 72 h - 30 s)



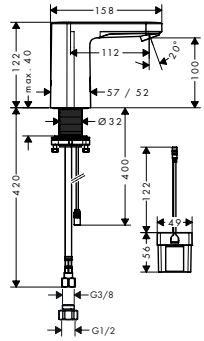

Technologies

Sensor Activation | AirPower | Comfort Zone

Overview variants

Power supply	Finish	Code no.
mains connection	Chrome	71504007
battery operation	Chrome	71503007

Measurements within scale drawings are in mm.
Technical specifications and units of measure are subject to change.

Vernis Blend Single lever bath mixer for exposed installation

Features

- 2 functions
- projection: 171 mm
- spray type mixer: normal spray
- maximum flow rate at 3 bar: 23,1 l/min
- flow rate for bath spout at 3 bar: 23,1 l/min
- flow rate of hand shower at 3 bar: 7,4 l/min
- ceramic cartridge
- temperature limitation adjustable
- diverter with automatic resetting
- non-return valve
- suitable for continous flow water heaters
- connection dimension: DN15
- connection type: s-shaped connections
- wall-mounted
- min. operating pressure: 1 bar
- max. operating pressure: 10 bar



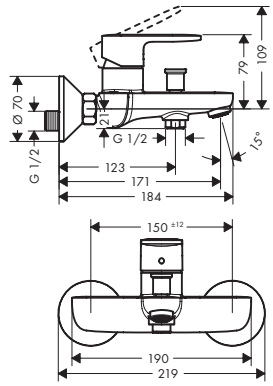

Technologies

AirPower

Finish	Code no.
Chrome	71440007
Matt Black	71440677

Vernis Blend Single lever bath mixer for concealed installation

Features

- 2 functions
- flow rate upper outlet: 20 l/min
- flow rate lower outlet: 20 l/min
- maximum flow rate at 3 bar: 20 l/min
- flow rate for bath spout at 3 bar: 20 l/min
- flow rate of hand shower at 3 bar: 10 l/min
- ceramic cartridge
- temperature limitation adjustable
- diverter with automatic resetting
- connection type: basic set
- wall-mounted
- max. operating pressure: 10 bar



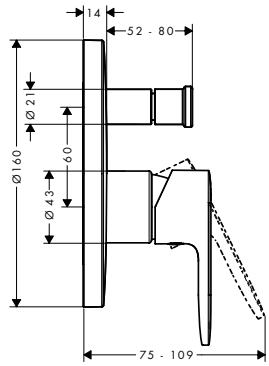

Finish	Code no.
Chrome	71449007
Matt Black	71449677

Required parts:	Code no.
Basic set for single lever bath mixer for concealed installation	71465187

Measurements within scale drawings are in mm.
Technical specifications and units of measure are subject to change.

Vernis Blend Bath mixer set for concealed installation

Features

- consists of: single lever bath mixer, basic set
- 2 functions
- flow rate upper outlet: 20 l/min
- flow rate lower outlet: 20 l/min
- maximum flow rate at 3 bar: 20 l/min
- flow rate for bath spout at 3 bar: 20 l/min
- flow rate of hand shower at 3 bar: 10 l/min
- ceramic cartridge
- temperature limitation adjustable
- diverter with automatic resetting
- connection type: basic set
- wall-mounted
- max. operating pressure: 10 bar



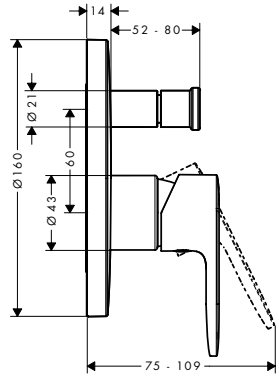

Finish	Code no.
Chrome	71445007

Consisting of:		Included in	Code no.
	Vernis Blend Single lever bath mixer for concealed installation	71445007	71449007
	Basic set for single lever bath mixer for concealed installation	71445007	71465187

Optional parts:		Finish	Code no.
	Extension set 25 mm	Chrome	71962007

Vernis Blend Bath spout

Features

- with escutcheon
- projection: 204 mm
- wall-mounted
- maximum flow rate at 3 bar: 21,7 l/min
- connection dimension: G ½
- spray type: normal spray



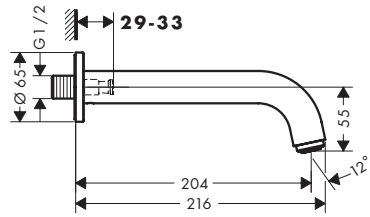

Technologies

AirPower

Finish	Code no.
Chrome	71420007
Matt Black	71420677

Measurements within scale drawings are in mm.
Technical specifications and units of measure are subject to change.

Vernis Blend 4-hole rim mounted bath mixer set

Features

- consists of: 4-hole rim mounted bath mixer, hand shower, shower hose, basic set
- 2 functions
- projection: 211 mm
- spray type mixer: normal spray
- maximum flow rate at 3 bar: 20 l/min
- ceramic valves hot/cold 90°
- temperature limitation adjustable
- non-return valve
- suitable for continous flow water heaters
- connection dimension: DN15
- connection type: G ½
- installation on bath rim



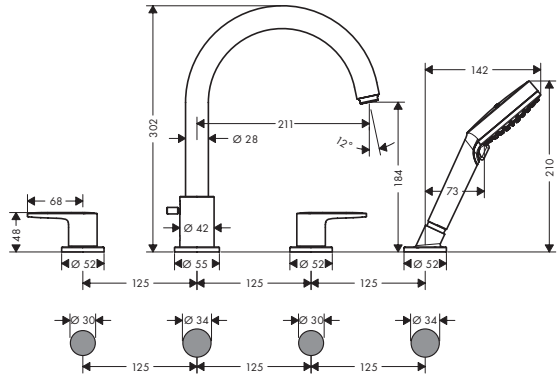

Technologies

AirPower

Finish	Code no.
Chrome	71441007
Matt Black	71441677

Consisting of:	Included in	Code no.
Vernis Blend Hand shower 100 Vario	71441CHN	26270CHN

Vernis Blend Single lever shower mixer for exposed installation

Features

- 1 function
- maximum flow rate at 3 bar: 7,4 l/min
- flow rate of hand shower at 3 bar: 7,4 l/min
- ceramic cartridge
- temperature limitation adjustable
- non-return valve
- suitable for continous flow water heaters
- hose connection DN15
- connection dimension: DN15
- min. operating pressure: 1 bar
- max. operating pressure: 10 bar
- connection type: s-shaped connections



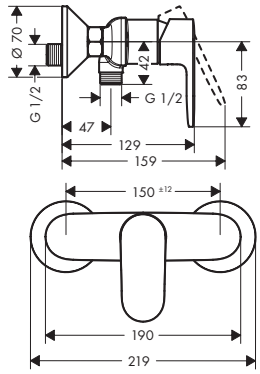

Finish	Code no.
Chrome	71640007
Matt Black	71640677

Measurements within scale drawings are in mm.
Technical specifications and units of measure are subject to change.

Vernis Blend Single lever shower mixer for concealed installation

Features

- 1 function
- maximum flow rate at 3 bar: 10 l/min
- ceramic cartridge
- temperature limitation adjustable
- min. operating pressure: 1 bar
- max. operating pressure: 10 bar
- connection type: basic set



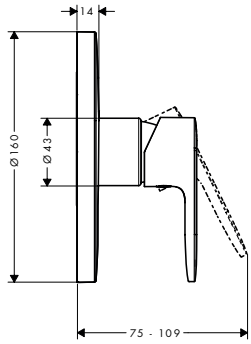

Finish	Code no.
Chrome	71649007
Matt Black	71649677

Required parts:	Code no.
Basic set for single lever shower mixer for concealed installation	71651187

Optional parts:	Finish	Code no.
Extension set 25 mm	Chrome	71963007

Vernis Blend Shower mixer set for concealed installation

Features

- consists of: single lever shower mixer, basic set
- 1 function
- maximum flow rate at 3 bar: 10 l/min
- ceramic cartridge
- temperature limitation adjustable
- connection type: basic set



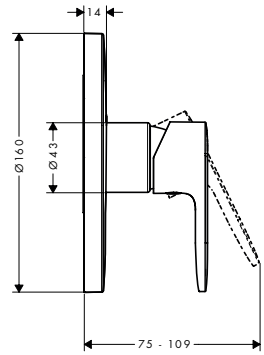

Finish	Code no.
Chrome	71645007

Consisting of:	Included in	Code no.
Vernis Blend Single lever shower mixer for concealed installation	71645007	71649007
Basic set for single lever shower mixer for concealed installation	71645007	71651187

Optional parts:	Finish	Code no.
Extension set 25 mm	Chrome	71963007

Measurements within scale drawings are in mm.
Technical specifications and units of measure are subject to change.

Vernis Shape Singel lever basin mixers with isolated water counduction

Features of all variants

- consists of: single lever basin mixer, waste set
- handle variant: lever handle
- spray type: normal spray
- maximum flow rate at 3 bar: 6 l/min
- ceramic cartridge
- with isolated water conduction - without contact with nickel and lead
- suitable for continuous flow water heaters
- pop-up waste set G 1¼
- material waste set: synthetic
- connection type: G ½ connections
- connection dimension: DN15

70



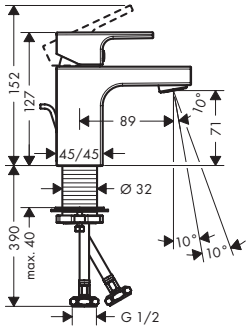

100



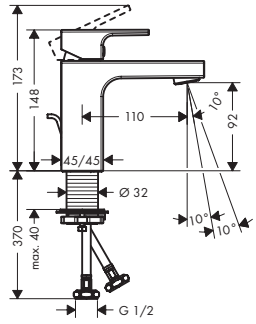

190



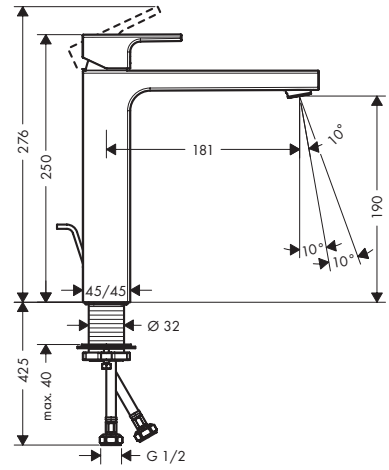

Sustainability



Technologies



Overview variants

ComfortZone	Projection (mm)	Spout height (mm)	Waste set	Material waste set	CoolStart	Finish	Code no.
70	89	71	pop-up	synthetic	–	Chrome	71560007
						Matt Black	71560677
100	110	95	pop-up	synthetic	■	Chrome	71561007
						Matt Black	71561677
190	181	190	pop-up	synthetic	–	Chrome	71562007
						Matt Black	71562677

Measurements within scale drawings are in mm.
Technical specifications and units of measure are subject to change.

Vernis Shape Single lever basin mixer with swivel spout and pop-up waste set

Features

- consists of: single lever basin mixer, waste set
- ComfortZone 200
- projection: 166 mm
- spout height: 200 mm
- handle variant: lever handle
- spray type: laminar spray
- maximum flow rate at 3 bar: 5 l/min
- ceramic cartridge
- suitable for continuous flow water heaters
- pop-up waste set G 1¼
- material waste set: synthetic
- connection type: G ½ connections
- connection dimension: DN15



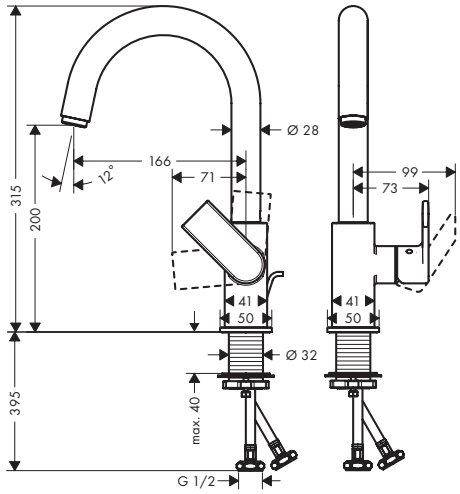

Sustainability

EcoSmart

Technologies

Comfort Zone

Finish	Code no.
Chrome	71564007

Vernis Shape 3-hole basin mixer with pop-up waste set

Features

- consists of: 3-hole basin mixer, waste set
- ComfortZone 150
- projection: 166 mm
- spout height: 151 mm
- handle variant: lever handle
- spray type: laminar spray
- maximum flow rate at 3 bar: 5 l/min
- ceramic valves hot/cold 90°
- suitable for continuous flow water heaters
- pop-up waste set G 1¼
- material waste set: synthetic
- connection type: G ½ connections
- connection dimension: DN15



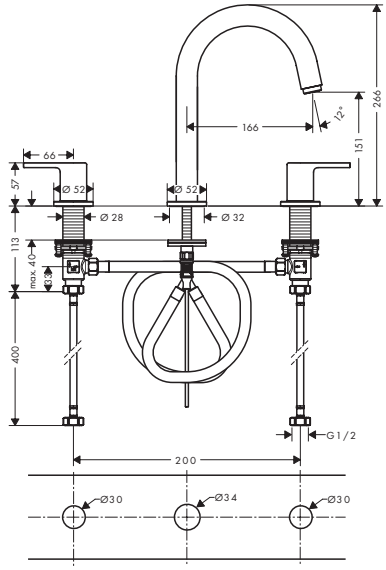

Sustainability

EcoSmart

Technologies

Comfort Zone

Finish	Code no.
Chrome	71563007
Matt Black	71563677

Measurements within scale drawings are in mm.
Technical specifications and units of measure are subject to change.

Vernis Shape Single lever basin mixer for concealed installation wall-mounted with spout 20,4 cm

Features

- projection: 204 mm
- handle variant: lever handle
- spray type: normal spray
- maximum flow rate at 3 bar: 5 l/min
- ceramic cartridge
- suitable for continuous flow water heaters
- connection type: basic set
- connection dimension: DN15
- cold water in basic handle position



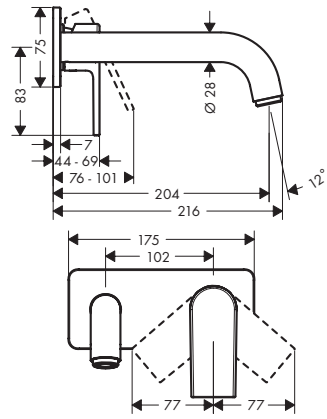

Sustainability

Technologies

Finish	Code no.
Chrome	71578007
Matt Black	71578677

Required parts:	Code no.
Basic set for single lever basin mixer for concealed installation wall-mounted	71577187

Optional parts:	Finish	Code no.
Extension set 25 mm	Chrome	71556007

Vernis Shape Single lever bath mixer for exposed installation

Features

- 2 functions
- projection: 166 mm
- spray type mixer: normal spray
- maximum flow rate at 3 bar: 23,1 l/min
- flow rate for bath spout at 3 bar: 23,1 l/min
- flow rate of hand shower at 3 bar: 7,4 l/min
- ceramic cartridge
- temperature limitation adjustable
- diverter with automatic resetting
- non-return valve
- suitable for continous flow water heaters
- connection dimension: DN15
- connection type: s-shaped connections
- wall-mounted
- min. operating pressure: 1 bar
- max. operating pressure: 10 bar



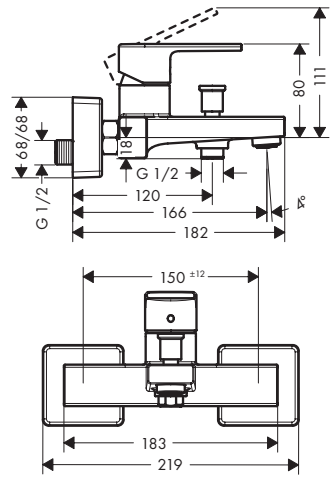

Technologies

Finish	Code no.
Chrome	71450007
Matt Black	71450677

Measurements within scale drawings are in mm.
Technical specifications and units of measure are subject to change.

Vernis Shape Single lever bath mixer for concealed installation

Features

- 2 functions
- flow rate upper outlet: 20 l/min
- flow rate lower outlet: 20 l/min
- maximum flow rate at 3 bar: 20 l/min
- flow rate for bath spout at 3 bar: 20 l/min
- flow rate of hand shower at 3 bar: 10 l/min
- ceramic cartridge
- temperature limitation adjustable
- diverter with automatic resetting
- connection type: basic set
- wall-mounted
- max. operating pressure: 10 bar



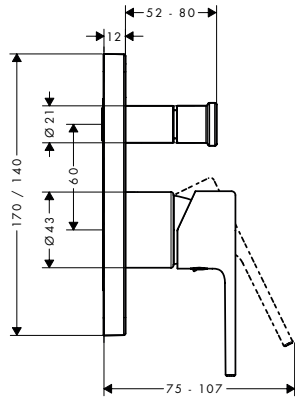

Finish	Code no.
Chrome	71458007
Matt Black	71458677

Required parts:	Code no.
Basic set for single lever bath mixer for concealed installation	71465187

Measurements within scale drawings are in mm.
Technical specifications and units of measure are subject to change.

Vernis Shape Bath mixer set for concealed installation

Features

- consists of: single lever bath mixer, basic set
- 2 functions
- flow rate upper outlet: 20 l/min
- flow rate lower outlet: 20 l/min
- maximum flow rate at 3 bar: 20 l/min
- flow rate for bath spout at 3 bar: 20 l/min
- flow rate of hand shower at 3 bar: 10 l/min
- ceramic cartridge
- temperature limitation adjustable
- diverter with automatic resetting
- connection type: basic set
- wall-mounted
- max. operating pressure: 10 bar



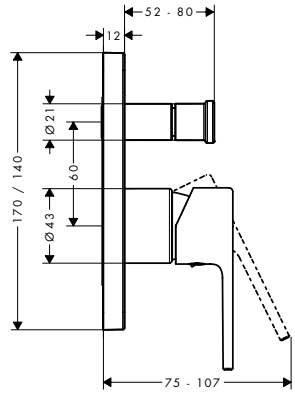

Finish	Code no.
Chrome	71455007

Consisting of:	Included in	Code no.
Vernis Shape Single lever bath mixer for concealed installation	71455007	71458007
Basic set for single lever bath mixer for concealed installation	71455007	71465187

Optional parts:	Finish	Code no.
Extension set 25 mm	Chrome	71962007

Vernis Shape Bath spout

Features

- with escutcheon
- projection: 204 mm
- wall-mounted
- maximum flow rate at 3 bar: 21,7 l/min
- connection dimension: G ½
- spray type: normal spray



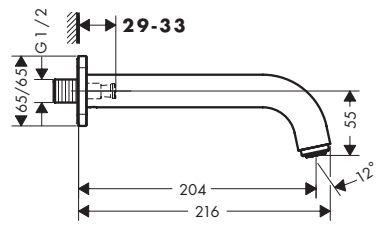

Technologies

AirPower

Finish	Code no.
Chrome	71460007
Matt Black	71460677

Measurements within scale drawings are in mm.
Technical specifications and units of measure are subject to change.

Vernis Shape 4-hole rim mounted bath mixer set

Features

- consists of: 4-hole rim mounted bath mixer, hand shower, shower hose, basic set
- 2 functions
- spray type mixer: normal spray
- maximum flow rate at 3 bar: 20 l/min
- ceramic valves hot/cold 90°
- temperature limitation adjustable
- non-return valve
- suitable for continous flow water heaters
- connection dimension: DN15
- connection type: G ½
- installation on bath rim



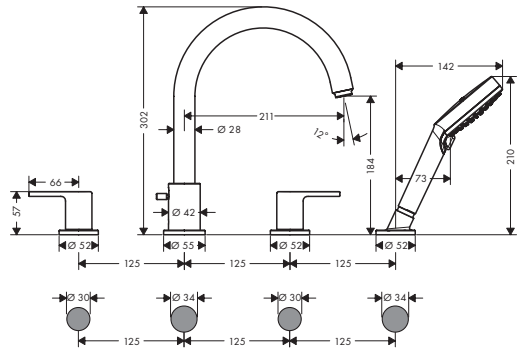

Technologies

AirPower

Finish	Code no.
Chrome	71451007
Matt Black	71451677

Consisting of:	Included in	Code no.
Vernis Blend Hand shower 100 Vario	71451CHN	26270CHN

Vernis Shape Single lever shower mixer for exposed installation

Features

- 1 function
- maximum flow rate at 3 bar: 7,4 l/min
- flow rate of hand shower at 3 bar: 7,4 l/min
- ceramic cartridge
- temperature limitation adjustable
- non-return valve
- suitable for continous flow water heaters
- hose connection DN15
- connection dimension: DN15
- min. operating pressure: 1 bar
- max. operating pressure: 10 bar
- connection type: s-shaped connections



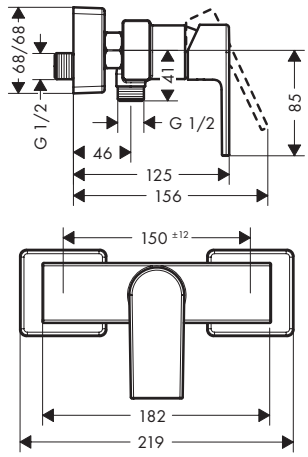

Finish	Code no.
Chrome	71650007
Matt Black	71650677

Measurements within scale drawings are in mm.
Technical specifications and units of measure are subject to change.

Vernis Shape Single lever shower mixer for concealed installation

Features

- 1 function
- maximum flow rate at 3 bar: 10 l/min
- ceramic cartridge
- temperature limitation adjustable
- min. operating pressure: 1 bar
- max. operating pressure: 10 bar
- connection type: basic set



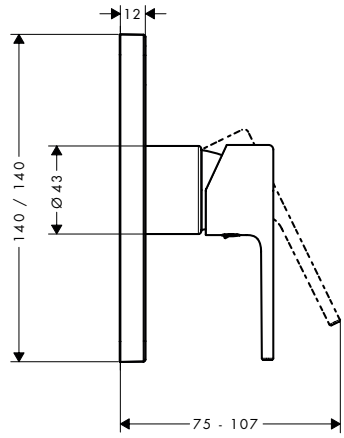

Finish	Code no.
Chrome	71658007
Matt Black	71658677

Required parts:	Code no.
Basic set for single lever shower mixer for concealed installation	71651187



Electronic mixers

Metris S Electronic basin mixers

Features of all variants

- ComfortZone 150
- projection: 128 mm
- spray type: normal spray
- maximum flow rate at 3 bar: 5 l/min
- temperature limitation adjustable
- non-return valve
- suitable for continous flow water heaters
- infrared sensor technology
- automatic environmental adjustment of infrared sensor
- adjustable optical range of infrared sensor (2 settings)
- running time: 10 s
- hygiene rinse activatable (automatic water flow)
- frequency of hygiene rinse: 24 h
- flushing time hygiene rinse: 10 s
- permanent rinse activatable (single water flow for 180 seconds, suitable for thermal disinfection)
- cleaning mode: manual water stop for washbasin cleaning
- connection dimension: DN15
- TÜV certified
- dirt filters in the connection hoses
- EU taxonomy: max. 6 l/min - Substantial Contribution (SC) possible

pre adjustable



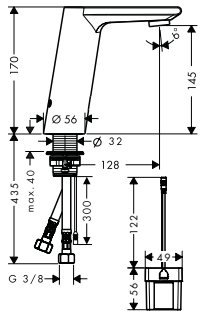

adjustable



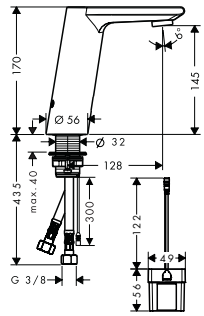

Sustainability

EcoSmart

Technologies

Sensor Activation · AirPower · Comfort Zone

Certificates/declarations

EPD

Overview variants

Power supply	Temperature adjustment	Finish	Code no.
battery operation	pre adjustable	Chrome	31101000
battery operation	adjustable	Chrome	31100000
mains connection	pre adjustable	Chrome	31103000
mains connection	adjustable	Chrome	31102000

Focus Electronic basin mixers

Features of all variants

- ComfortZone 130
- projection: 127 mm
- spray type: normal spray
- maximum flow rate at 3 bar: 5 l/min
- temperature limitation adjustable
- non-return valve
- suitable for continous flow water heaters
- infrared sensor technology
- automatic environmental adjustment of infrared sensor
- adjustable optical range of infrared sensor (2 settings)
- running time: 10 s
- hygiene rinse activatable (automatic water flow)
- frequency of hygiene rinse: 24 h
- flushing time hygiene rinse: 10 s
- permanent rinse activatable (single water flow for 180 seconds, suitable for thermal disinfection)
- cleaning mode: manual water stop for washbasin cleaning
- connection dimension: DN15
- TÜV certified
- dirt filters in the connection hoses
- EU taxonomy: max. 6 l/min - Substantial Contribution (SC) possible

pre adjustable



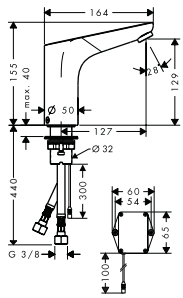

adjustable



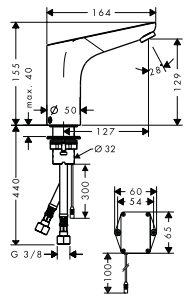

Sustainability

EcoSmart

Technologies

Sensor Activation · AirPower · Comfort Zone

Certificates/declarations

EPD

Overview variants

Power supply	Temperature adjustment	Finish	Code no.
battery operation	pre adjustable	Chrome	31172000
battery operation	adjustable	Chrome	31171000
mains connection	pre adjustable	Chrome	31174000
mains connection	adjustable	Chrome	31173000

Measurements within scale drawings are in mm.
Technical specifications and units of measure are subject to change.

Vernis Blend Electronic basin mixers

Features of all variants

- ComfortZone 100
- projection: 112 mm
- spray type: normal spray
- swiveling spray former
- maximum flow rate at 3 bar: 5,7 l/min
- temperature pre-adjustable
- with isolated water conduction - without contact with nickel and lead
- non-return valve
- infrared sensor technology
- automatic environmental adjustment of infrared sensor
- running time adjustable
- running time: 10 s, 20 s, 30 s
- hygiene rinse activatable (automatic water flow)
- frequency of hygiene rinse: 24 h, 48 h, 72 h
- flushing time hygiene rinse: 10 s, 20 s, 30 s
- permanent rinse activatable (single water flow for 200 seconds, suitable for thermal disinfection)
- cleaning mode: manual water stop for washbasin cleaning
- connection dimension: DN15
- dirt filters in the connection hoses
- frequency of hygiene rinse and flushing time hygiene rinse are dependent on each other (24 h - 10 s, 48 h - 20 s, 72 h - 30 s)



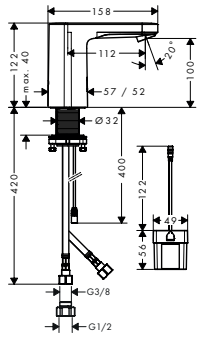

Technologies

Sensor Activation | AirPower | Comfort Zone

Overview variants

Power supply	Finish	Code no.
mains connection	Chrome	71501007
battery operation	Chrome	71502007

Vernis Blend Electronic basin mixers for cold water or pre-adjusted water

Features of all variants

- ComfortZone 100
- projection: 112 mm
- spray type: normal spray
- swiveling spray former
- maximum flow rate at 3 bar: 5,7 l/min
- for cold water or pre-adjusted/conditioned water
- with isolated water conduction - without contact with nickel and lead
- infrared sensor technology
- automatic environmental adjustment of infrared sensor
- running time adjustable
- running time: 10 s, 20 s, 30 s
- hygiene rinse activatable (automatic water flow)
- frequency of hygiene rinse: 24 h, 48 h, 72 h
- flushing time hygiene rinse: 10 s, 20 s, 30 s
- permanent rinse activatable (single water flow for 200 seconds, suitable for thermal disinfection)
- cleaning mode: manual water stop for washbasin cleaning
- connection dimension: DN15
- dirt filter in the connection hose
- frequency of hygiene rinse and flushing time hygiene rinse are dependent on each other (24 h - 10 s, 48 h - 20 s, 72 h - 30 s)



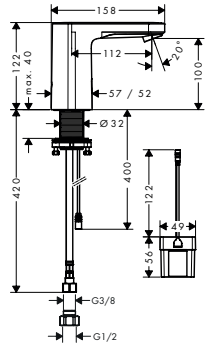

Technologies

Sensor Activation | AirPower | Comfort Zone

Overview variants

Power supply	Finish	Code no.
mains connection	Chrome	71504007
battery operation	Chrome	71503007

Measurements within scale drawings are in mm.
Technical specifications and units of measure are subject to change.



Accessories

XtraStoris Original Wall niches with frame

Features of all variants

- consists of: wall niche with frame, sealing set
- installation depth: 100 mm
- where to use: new construction, renovation
- easy to clean surface
- suitable for use in wet areas
- wall type: drywall construction, solid wall construction
- material sealing set: Polystyrene (PS)
- material wall niche: Stainless Steel 304 (1.4301)
- surface of the wall niche powder-coated stainless steel

300/150/100



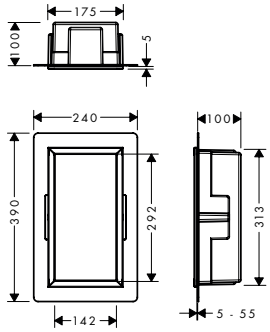

300/300/100



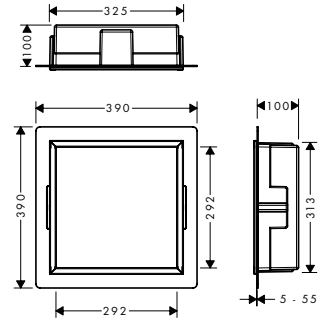

Installation

Water Damage Protection

Overview variants

	Width (mm)	Finish	Code no.
	150	Concretegrey	56057380
		Matt Black	56057670
		Matt White	56057700
	300	Concretegrey	56061380
		Matt Black	56061670
		Matt White	56061700

XtraStoris Original Wall niches with frame

Features of all variants

- consists of: wall niche with frame, sealing set
- installation depth: 100 mm
- easy to clean surface
- suitable for use in wet areas
- wall type: solid wall construction, drywall construction
- material sealing set: Polystyrene (PS)
- material wall niche: Stainless Steel 304 (1.4301)
- surface of the wall niche powder-coated stainless steel

300/600/100



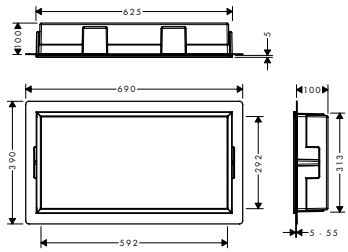

300/900/100



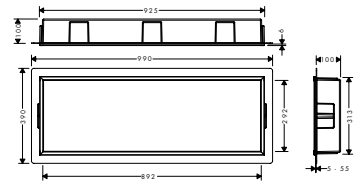

Installation

Water Damage Protection

Overview variants

	Width (mm)	Finish	Code no.
	600	Concretegrey	56064380
		Matt Black	56064670
		Matt White	56064700

Measurements within scale drawings are in mm.
Technical specifications and units of measure are subject to change.

XtraStoris Original Wall niches with frame

Overview variants

Width (mm)	Finish	Code no.
900	Concretegrey	56067380
	Matt Black	56067670
	Matt White	56067700

XtraStoris Original Wall niches with frame

Features of all variants

- consists of: wall niche with frame, sealing set, installation set
- where to use: new construction, renovation
- easy to clean surface
- suitable for use in wet areas
- wall type: solid wall construction, drywall construction
- material sealing set: Polystyrene (PS)
- material wall niche: Stainless Steel 304 (1.4301)
- required dimensions for installation set: 323 x 313 x 75 mm (HxWxD)

300/150/70

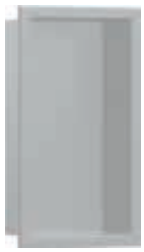

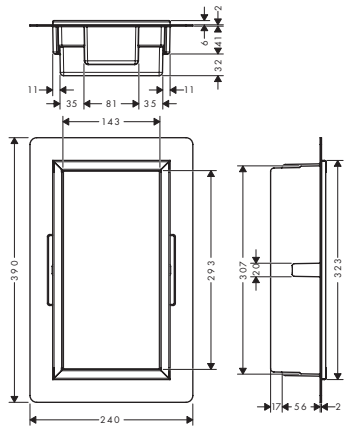

Installation

Water Damage Protection

300/300/70



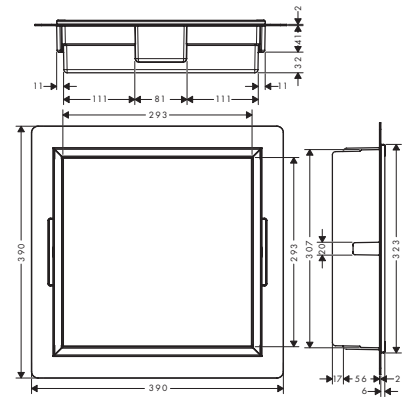

Overview variants

Width (mm)	Finish	Code no.
150	Concretegrey	56092380
	Matt Black	56092670
	Matt White	56092700
300	Concretegrey	56093380
	Matt Black	56093670
	Matt White	56093700

Measurements within scale drawings are in mm.
Technical specifications and units of measure are subject to change.

XtraStoris Original Recessed toilet paper storage for 6 rolls

Features

- consists of: wall niche with frame, toilet paper holder
- installation depth: 140 mm
- where to use: new construction, renovation
- easy to clean surface
- mounting brackets for easy installation
- easy adjustment to tile thickness
- wall type: drywall construction, solid wall construction
- material wall niche: Stainless Steel 304 (1.4301)
- stores up to 6 toilet rolls

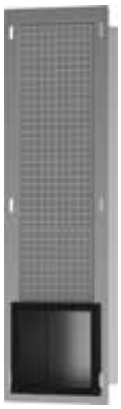

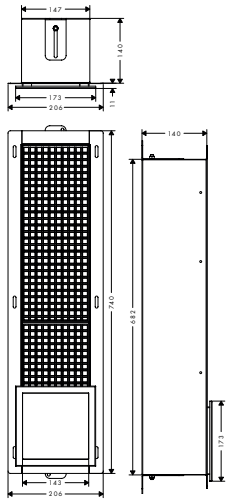

Finish	Available from	Code no.
Matt Black	Q1/2024	56058670
Matt White	Q1/2024	56058700
Brushed Stainless Steel	Q1/2024	56058800

XtraStoris Original Recessed toilet paper holder 150/150 /140

Features

- installation depth: 140 mm
- where to use: new construction, renovation
- easy to clean surface
- frameless design
- wall type: drywall construction, solid wall construction
- material wall niche: Stainless Steel 304 (1.4301)
- dimensions wall niche: 150 x 150 x 140 (HxWxD)
- required dimensions for installation set: 150 x 198 x 144mm (HxWxD)



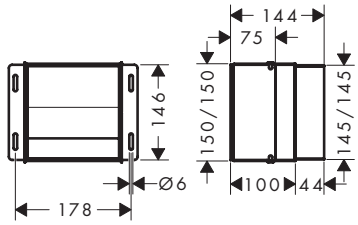

Finish	Code no.
Matt Black	56065670
Matt White	56065700
Brushed Stainless Steel	56065800

XtraStoris Minimalistic Wall niches frameless

Features of all variants

- consists of: wall niche frameless, installation set, sealing set
- installation depth: 100 mm
- where to use: new construction, renovation
- variable installation depth
- easy to clean surface
- installable flush with the wall or as a design element sticking out (up to 55 mm)
- frameless design
- suitable for use in wet areas
- easy adjustment to tile thickness
- wall type: drywall construction, solid wall construction
- material sealing set: Polystyrene (PS)
- material wall niche: Stainless Steel 304 (1.4301)

300/150/100



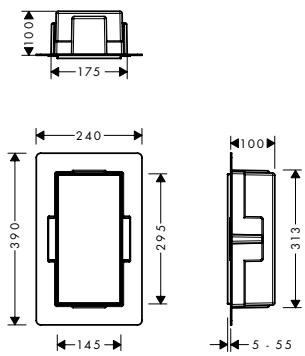

300/300/100



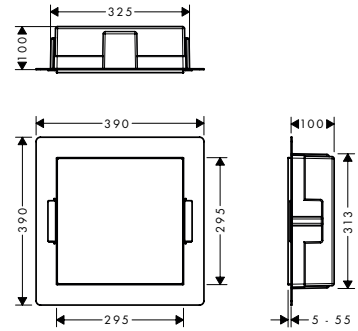

Installation

Variable Installation Depth

Water Damage Protection

Measurements within scale drawings are in mm.
Technical specifications and units of measure are subject to change.

XtraStoris Minimalistic Wall niches frameless

Overview variants

	Width (mm)	Finish	Code no.
	150	Matt Black	56070670
		Matt White	56070700
		Brushed Stainless Steel	56070800
	300	Matt Black	56073670
		Matt White	56073700
		Brushed Stainless Steel	56073800

XtraStoris Minimalistic Wall niches frameless

Features of all variants

- consists of: wall niche frameless, installation set, sealing set
- installation depth: 140 mm
- where to use: new construction, renovation
- variable installation depth
- easy to clean surface
- installable flush with the wall or as a design element sticking out (up to 55 mm)
- frameless design
- suitable for use in wet areas
- easy adjustment to tile thickness
- wall type: solid wall construction, drywall construction
- material sealing set: Polystyrene (PS)
- material wall niche: Stainless Steel 304 (1.4301)

300/150/140



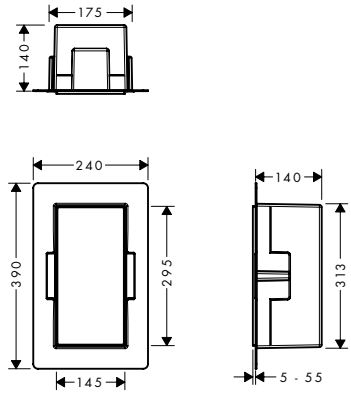

Installation



300/300/140



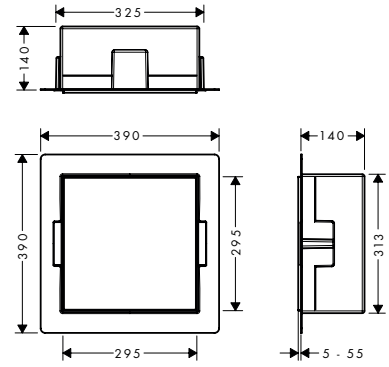

Overview variants

	Width (mm)	Finish	Code no.
	150	Matt Black	56076670
		Matt White	56076700
		Brushed Stainless Steel	56076800
	300	Matt Black	56079670
		Matt White	56079700
		Brushed Stainless Steel	56079800

Measurements within scale drawings are in mm.
Technical specifications and units of measure are subject to change.

XtraStoris Rock Wall niches with tileable door

Features of all variants

- consists of: wall niche with tileable door, installation set, sealing set
- tileable Push-Open door
- depth of the tileable door: 12 mm
- installation depth: 100 mm
- variable installation depth
- easy to clean surface
- suitable for use in wet areas
- easy adjustment to tile thickness
- wall type: solid wall construction, drywall construction
- material sealing set: Polystyrene (PS)
- material wall niche: Stainless Steel 304 (1.4301)

300/150/100



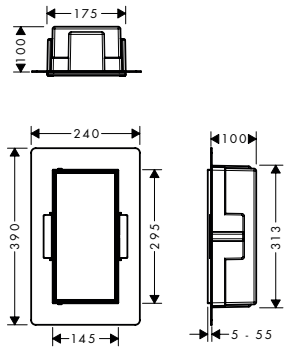

300/300/100



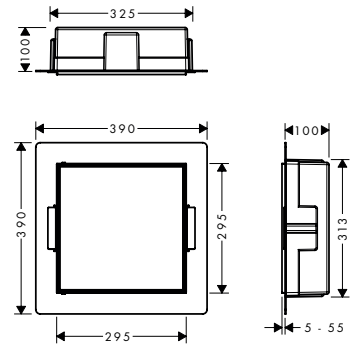

Installation

Variable Installation Depth

Water Damage Protection

Overview variants

Width (mm)	Finish	Code no.
150	Matt Black	56082670
	Matt White	56082700
	Brushed Stainless Steel	56082800
300	Matt Black	56085670
	Matt White	56085700
	Brushed Stainless Steel	56085800

XtraStoris Rock Wall niches with tileable door

Features of all variants

- consists of: wall niche with tileable door, installation set, sealing set
- tileable Push-Open door
- depth of the tileable door: 12 mm
- installation depth: 140 mm
- where to use: new construction, renovation
- variable installation depth
- easy to clean surface
- suitable for use in wet areas
- easy adjustment to tile thickness
- wall type: solid wall construction, drywall construction
- material sealing set: Polystyrene (PS)
- material wall niche: Stainless Steel 304 (1.4301)

300/150/140



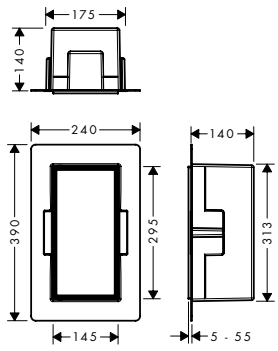

300/300/140



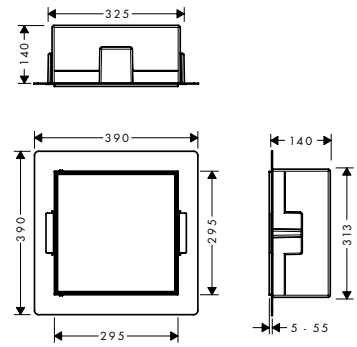

Installation

Variable Installation Depth

Water Damage Protection

Overview variants

Width (mm)	Finish	Code no.
150	Matt Black	56088670
	Matt White	56088700
	Brushed Stainless Steel	56088800

Measurements within scale drawings are in mm.
Technical specifications and units of measure are subject to change.

XtraStoris Rock Wall niches with tileable door

Overview variants

	Width (mm)	Finish	Code no.
	300	Matt Black	56091670
		Matt White	56091700
		Brushed Stainless Steel	56091800

XtraStoris Rock Recessed toilet brush holder with storage shelf and tileable door

Features

- consists of: wall niche with tileable door, toilet brush holder, toilet brush, shelf, installation set, sealing set
- tileable Push-Open door
- depth of the tileable door: 12 mm
- installation depth: 140 mm
- where to use: new construction, renovation
- easy to clean surface
- frameless design
- easy adjustment to tile thickness
- wall type: drywall construction, solid wall construction
- material sealing set: Polystyrene (PS)
- material wall niche: Stainless Steel 304 (1.4301)
- material of the brush holder plastic, chromed
- dimensions wall niche: 595 x 145 x 140 (HxWxD)
- required dimensions for installation set: 606 x 176 x 140 mm (HxWxD)



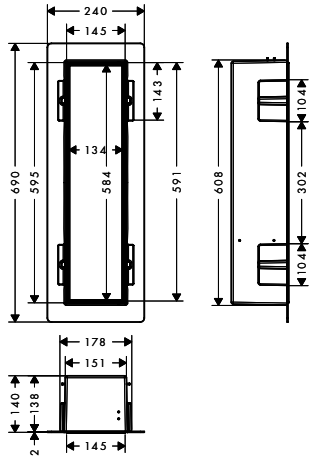

Installation

Water Damage Protection

Finish	Available from	Code no.
Matt Black	Q1/2024	56060670
Matt White	Q1/2024	56060700
Brushed Stainless Steel	Q1/2024	56060800

XtraStoris Rock Recessed waste bin with tileable door 300/150/140

Features

- consists of: wall niche with tileable door, waste bin, installation set, sealing set
- tileable Push-Open door
- depth of the tileable door: 12 mm
- installation depth: 140 mm
- where to use: new construction, renovation
- easy to clean surface
- easy adjustment to tile thickness
- wall type: drywall construction, solid wall construction
- material sealing set: Polystyrene (PS)
- material wall niche: Stainless Steel 304 (1.4301)
- capacity: 2,5 l



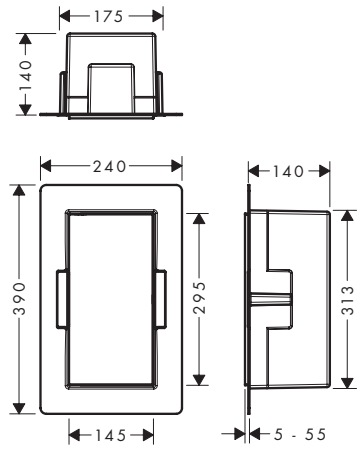

Installation

Water Damage Protection

Finish	Available from	Code no.
Matt Black	Q1/2024	56063670
Matt White	Q1/2024	56063700
Brushed Stainless Steel	Q1/2024	56063800

Measurements within scale drawings are in mm.
Technical specifications and units of measure are subject to change.

XtraStoris Rock Recessed waste bin with tileable door 300/300/100

Features

- consists of: wall niche with tileable door, installation set, waste bin, sealing set
- tileable Push-Open door
- depth of the tileable door: 12 mm
- installation depth: 100 mm
- where to use: new construction, renovation
- easy to clean surface
- frameless design
- pre-installed
- wall type: drywall construction, solid wall construction
- material sealing set: Polystyrene (PS)
- material wall niche: Stainless Steel 304 (1.4301)
- capacity: 4 l



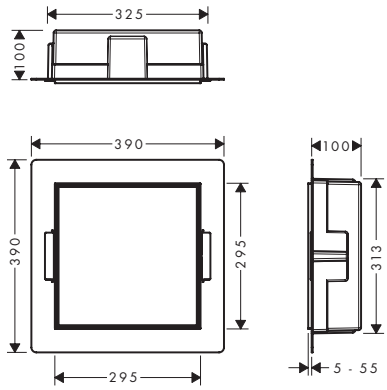

Installation

Water Damage Protection

Finish	Available from	Code no.
Brushed Stainless Steel	Q1/2024	56089800
Matt Black	Q1/2024	56089670
Matt White	Q1/2024	56089700

XtraStoris Rock Recessed trash bin with tileable door 300/300/140

Features

- consists of: wall niche with tileable door, installation set, sealing set
- tileable Push-Open door
- depth of the tileable door: 12 mm
- installation depth: 140 mm
- where to use: new construction, renovation
- easy to clean surface
- frameless design
- pre-installed
- wall type: drywall construction, solid wall construction
- material sealing set: Polystyrene (PS)
- material wall niche: Stainless Steel 304 (1.4301)
- capacity: 6 l



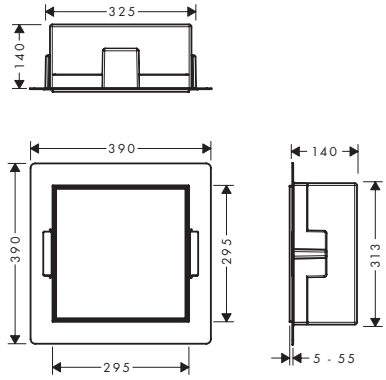

Installation

Water Damage Protection

Finish	Available from	Code no.
Brushed Stainless Steel	Q1/2024	56090800
Matt Black	Q1/2024	56090670
Matt White	Q1/2024	56090700

Measurements within scale drawings are in mm.
Technical specifications and units of measure are subject to change.

XtraStoris Individual Wall niches with design frame

Features of all variants

- consists of: wall niche with design frame, installation set, sealing set
- installation depth: 100 mm
- where to use: new construction, renovation
- easy to clean surface
- suitable for use in wet areas
- wall type: solid wall construction, drywall construction
- material sealing set: Polystyrene (PS)
- material wall niche: Stainless Steel 304 (1.4301)

300/150/100



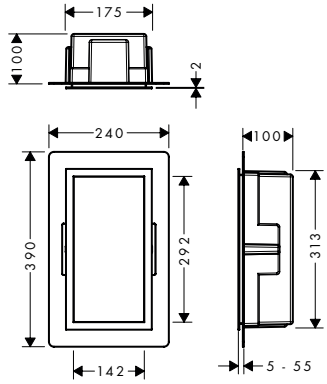

300/300/100



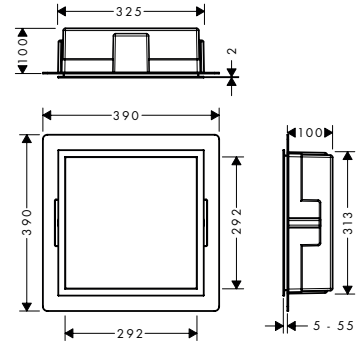

Installation

Water Damage Protection

Overview variants

Width (mm)	Body color	Finish	Code no.
150	Brushed Stainless Steel	Brushed Bronze	56094140
		Brushed Black Chrome	56094340
		Matt Black	56094670
		Matt White	56094700
		Brushed Stainless Steel	56094800
		Polished Gold Optic	56094990
150	Matt White	Brushed Bronze	56096140
		Brushed Black Chrome	56096340
		Matt Black	56096670
		Matt White	56096700
		Brushed Stainless Steel	56096800
		Polished Gold Optic	56096990
150	Matt Black	Brushed Bronze	56095140
		Brushed Black Chrome	56095340
		Matt Black	56095670
		Matt White	56095700
		Brushed Stainless Steel	56095800
		Polished Gold Optic	56095990
300	Brushed Stainless Steel	Brushed Bronze	56097140
		Brushed Black Chrome	56097340
		Matt Black	56097670
		Matt White	56097700
		Brushed Stainless Steel	56097800
		Polished Gold Optic	56097990

For more information about this product, please see the next page.

Measurements within scale drawings are in mm.
Technical specifications and units of measure are subject to change.

XtraStoris Individual Wall niches with design frame

Overview variants

Width (mm)	Body color	Finish	Code no.
300	Matt White	Brushed Bronze	56099140
		Brushed Black Chrome	56099340
		Matt Black	56099670
		Matt White	56099700
		Brushed Stainless Steel	56099800
		Polished Gold Optic	56099990
300	Matt Black	Brushed Bronze	56098140
		Brushed Black Chrome	56098340
		Matt Black	56098670
		Matt White	56098700
		Brushed Stainless Steel	56098800
		Polished Gold Optic	56098990

XtraStoris Safe Wall niche with tileable door and integrated shut-off valve 150/300/100

Features

- consists of: wall niche with tileable door, shut-off valve, installation set
- tileable Push-Open door
- depth of the tileable door: 12 mm
- installation depth: 90 mm
- where to use: new construction, renovation
- easy to clean surface
- wall type: drywall construction
- material wall niche: Stainless Steel 304 (1.4301)
- surface of the wall niche powder-coated stainless steel
- dimensions wall niche: 150 x 300 x 100 mm (HxWxD)

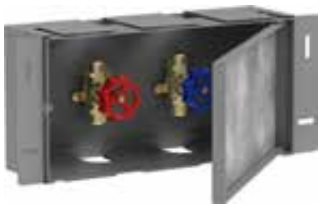

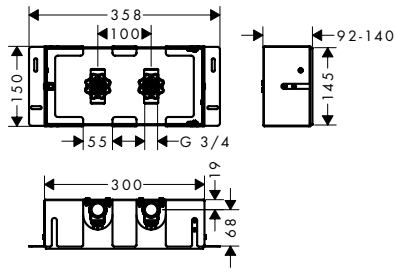

Installation

Water Damage Protection

Finish	Code no.
Stainless Steel Optic	56100800

Measurements within scale drawings are in mm.
Technical specifications and units of measure are subject to change.

Rainfinity Shelf 500

Features

- wall-mounted
- material frame: solid brass
- material shelf: safety glass
- surface shelf: graphite
- length: 500 mm
- with mounting material
- concealed fastening
- drilling distance: 400 mm
- diameter drill hole: 6 mm



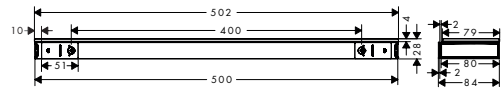

Finish	Code no.
Chrome	26844000
Brushed Bronze	26844140
Brushed Black Chrome	26844340
Matt Black	26844670
Matt White	26844700
Polished Gold Optic	26844990

26844000 Surface shelf: mirror glass.

AddStoris Corner basket

Features

- wall-mounted
- with mounting material
- concealed fastening
- drilling distance: 40 mm
- diameter drill hole: 6 mm
- can be used additional as a shelf

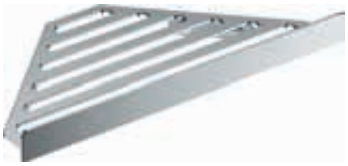

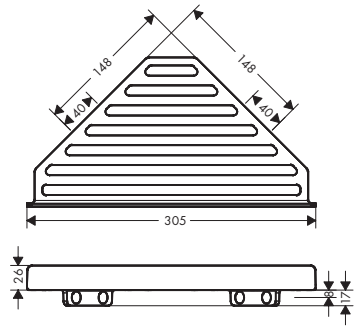

Finish	Code no.
Chrome	41741007
Brushed Bronze	41741147
Brushed Black Chrome	41741347
Matt Black	41741677
Matt White	41741707
Polished Gold Optic	41741997

AddStoris Towel hooks

Features of all variants

- wall-mounted
- material: metal
- with mounting material
- concealed fastening
- diameter drill hole: 6 mm



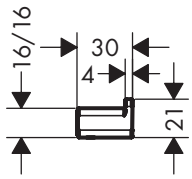



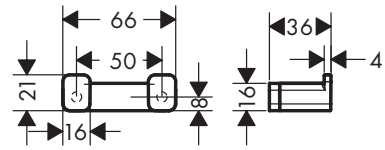

Overview variants

	Number of hooks	Finish	Code no.
	1 hook	Chrome	41742007
		Brushed Bronze	41742147
		Brushed Black Chrome	41742347
		Matt Black	41742677
		Matt White	41742707
		Polished Gold Optic	41742997
	2 hooks	Chrome	41755007
		Brushed Bronze	41755147
		Brushed Black Chrome	41755347
		Matt Black	41755677
		Matt White	41755707
		Polished Gold Optic	41755997

Measurements within scale drawings are in mm.
Technical specifications and units of measure are subject to change.

AddStoris Bath towel rails

Features of all variants

- wall-mounted
- material: metal
- holder material: metal
- length: 648 mm
- with mounting material
- drilling distance: 626 mm
- diameter drill hole: 6 mm
- concealed fastening

single



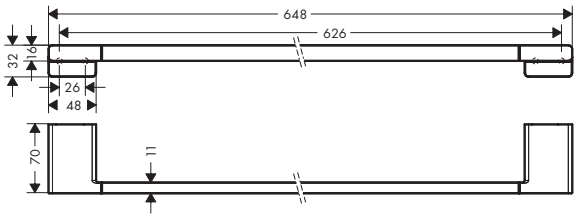

double



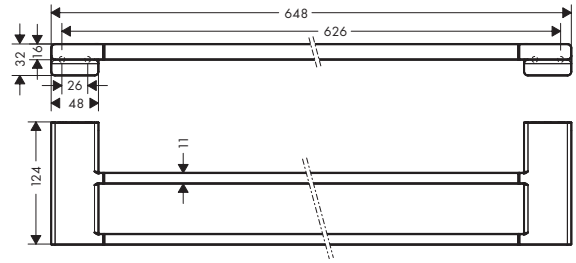

Overview variants

	Number of holder	Finish	Code no.
	1 holder	Chrome	41747007
		Brushed Bronze	41747147
		Brushed Black Chrome	41747347
		Matt Black	41747677
		Matt White	41747707
		Polished Gold Optic	41747997
	2 holders	Chrome	41743007
		Brushed Bronze	41743147
		Brushed Black Chrome	41743347
		Matt Black	41743677
		Matt White	41743707
		Polished Gold Optic	41743997

AddStoris Towel rack with towel holder

Features

- wall-mounted
- material: metal
- holder material: plastic
- length: 648 mm
- with mounting material
- concealed fastening
- drilling distance: 626 mm
- diameter drill hole: 6 mm



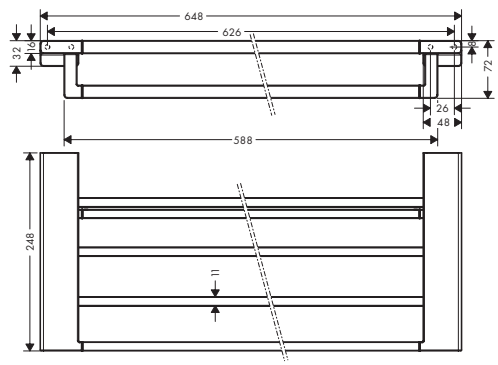

Finish	Code no.
Chrome	41751007
Brushed Bronze	41751147
Brushed Black Chrome	41751347
Matt Black	41751677
Matt White	41751707
Polished Gold Optic	41751997

Measurements within scale drawings are in mm.
Technical specifications and units of measure are subject to change.

AddStoris Towel holder twin-handle

Features

- wall-mounted
- material: metal
- holder material: plastic
- fixed
- length: 445 mm
- with mounting material
- drilling distance: 26 mm
- diameter drill hole: 6 mm
- concealed fastening



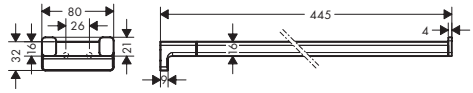

Finish	Code no.
Chrome	41770007
Brushed Bronze	41770147
Brushed Black Chrome	41770347
Matt Black	41770677
Matt White	41770707
Polished Gold Optic	41770997

AddStoris Towel ring

Features

- wall-mounted
- material: metal
- with mounting material
- drilling distance: 26 mm
- diameter drill hole: 6 mm



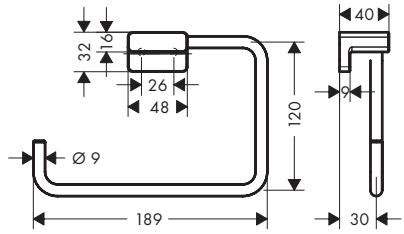

Finish	Code no.
Chrome	41754007
Brushed Bronze	41754147
Brushed Black Chrome	41754347
Matt Black	41754677
Matt White	41754707
Polished Gold Optic	41754997

AddStoris Shower door handle

Features

- material: metal
- holder material: metal
- fixed
- length: 398 mm
- with mounting material
- thickness of glass: 6 - 12 mm
- drilling distance: 350 mm
- diameter drill hole: 6 mm
- can be used simultaneously as a bath towel holder
- concealed fastening



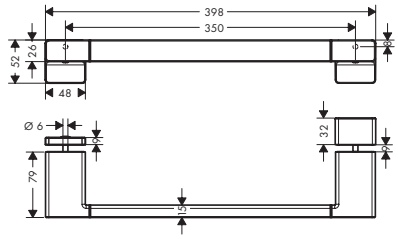

Finish	Code no.
Chrome	41759007
Brushed Bronze	41759147
Brushed Black Chrome	41759347
Matt Black	41759677
Matt White	41759707
Polished Gold Optic	41759997

Measurements within scale drawings are in mm.
Technical specifications and units of measure are subject to change.

AddStoris Grab bar

Features

- wall-mounted
- material: metal
- holder material: metal
- length: 348 mm
- with mounting material
- concealed fastening
- drilling distance: 326 mm
- diameter drill hole: 6 mm



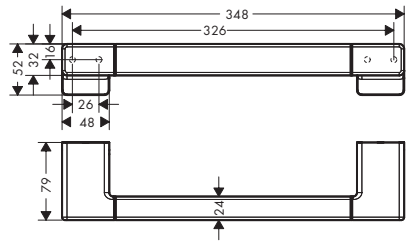

Finish	Code no.
Chrome	41744007
Brushed Bronze	41744147
Brushed Black Chrome	41744347
Matt Black	41744677
Matt White	41744707
Polished Gold Optic	41744997

AddStoris Toilet paper holders

Features of all variants

- wall-mounted
- material: metal
- with mounting material
- concealed fastening
- drilling distance: 26 mm
- diameter drill hole: 6 mm

without cover



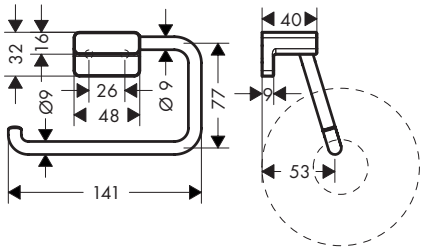

with shelf



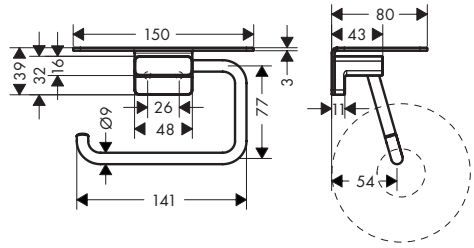

with cover



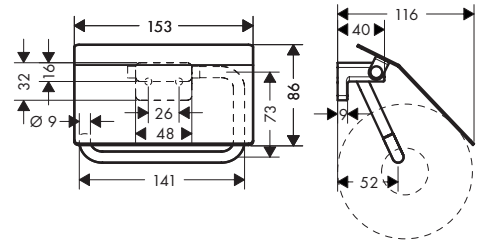

Overview variants

Version	Finish	Code no.
without cover	Chrome	41771007
	Brushed Bronze	41771147
	Brushed Black Chrome	41771347
	Matt Black	41771677
	Matt White	41771707
	Polished Gold Optic	41771997
with shelf	Chrome	41772007
	Brushed Bronze	41772147
	Brushed Black Chrome	41772347
	Matt Black	41772677
	Matt White	41772707
	Polished Gold Optic	41772997

For more information about this product, please see the next page.

Measurements within scale drawings are in mm.
Technical specifications and units of measure are subject to change.

AddStoris Toilet paper holders

Overview variants

Version	Finish	Code no.
with cover	Chrome	41753007
	Brushed Bronze	41753147
	Brushed Black Chrome	41753347
	Matt Black	41753677
	Matt White	41753707
	Polished Gold Optic	41753997

AddStoris Toilet paper holder double

Features

- wall-mounted
- material: metal
- holder material: metal
- with mounting material
- concealed fastening
- drilling distance: 26 mm
- diameter drill hole: 6 mm
- for 2 paper rolls



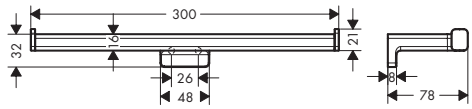

Finish	Code no.
Chrome	41748007
Brushed Bronze	41748147
Brushed Black Chrome	41748347
Matt Black	41748677
Matt White	41748707
Polished Gold Optic	41748997

AddStoris Spare roll holder

Features

- wall-mounted
- material: metal
- holder material: metal
- with mounting material
- concealed fastening
- drilling distance: 26 mm
- diameter drill hole: 6 mm



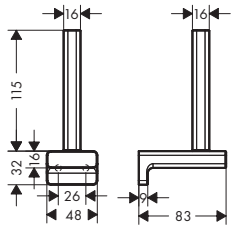

Finish	Code no.
Chrome	41756007
Brushed Bronze	41756147
Brushed Black Chrome	41756347
Matt Black	41756677
Matt White	41756707
Polished Gold Optic	41756997

Measurements within scale drawings are in mm.
Technical specifications and units of measure are subject to change.

AddStoris Toilet brush holder wall-mounted

Features

- wall-mounted
- material: metal
- material recess: matt glass
- with removable insert
- with mounting material
- concealed fastening
- drilling distance 26 mm
- diameter drill hole: 6 mm



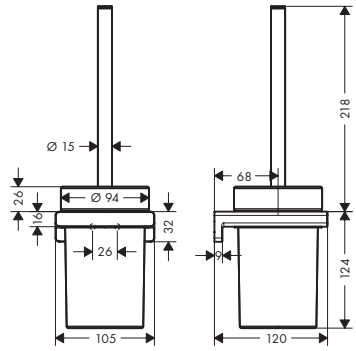

Finish	Code no.
Chrome	41752007
Brushed Bronze	41752147
Brushed Black Chrome	41752347
Matt Black	41752677
Matt White	41752707
Polished Gold Optic	41752997

Optional parts:	Finish	Code no.
 Replacement toilet brush with handle	Chrome	93286000

AddStoris Liquid soap dispenser

Features

- wall-mounted
- holder material: metal
- material container: glass
- type of soap: liquid soap
- filling capacity 200 ml
- dosage 2 ml
- with mounting material
- concealed fastening
- drilling distance: 26 mm
- diameter drill hole: 6 mm



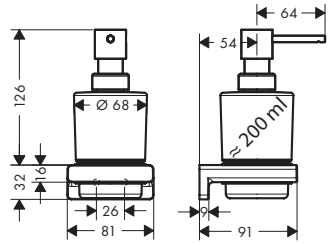

Finish	Code no.
Chrome	41745007
Brushed Bronze	41745147
Brushed Black Chrome	41745347
Matt Black	41745677
Matt White	41745707
Polished Gold Optic	41745997

AddStoris Soap dish

Features

- wall-mounted
- material recess: matt glass
- holder material: metal
- with mounting material
- concealed fastening
- drilling distance: 26 mm
- diameter drill hole: 6 mm



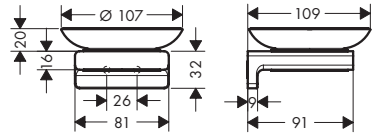

Finish	Code no.
Chrome	41746007
Brushed Bronze	41746147
Brushed Black Chrome	41746347
Matt Black	41746677
Matt White	41746707
Polished Gold Optic	41746997

Measurements within scale drawings are in mm.
Technical specifications and units of measure are subject to change.

AddStoris Toothbrush tumbler

Features

- wall-mounted
- material: metal, glass
- holder material: metal
- with mounting material
- concealed fastening
- drilling distance: 26 mm
- diameter drill hole: 6 mm



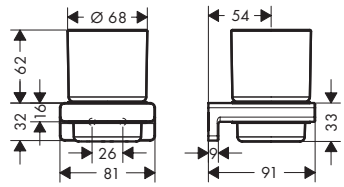

Finish	Code no.
Chrome	41749007
Brushed Bronze	41749147
Brushed Black Chrome	41749347
Matt Black	41749677
Matt White	41749707
Polished Gold Optic	41749997

AddStoris Sanitary bag dispenser



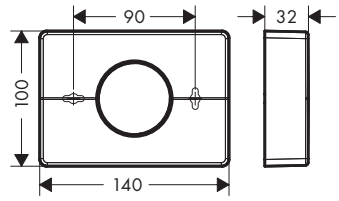

Finish	Code no.
Chrome	41773007
Brushed Bronze	41773147
Brushed Black Chrome	41773347
Matt Black	41773677
Matt White	41773707
Polished Gold Optic	41773997

AddStoris Tissue box

Features

- wall-mounted
- adhesive attachement, screw fastening
- material: plastic
- suitable for customary tissue boxes
- with mounting material
- concealed fastening
- drilling distance 200 mm
- diameter drill hole: 6 mm
- horizontal or vertical installation



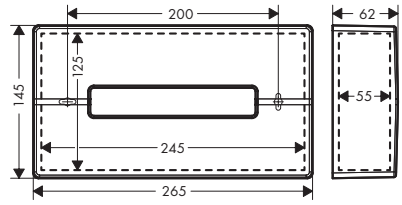

Finish	Code no.
Chrome	41774007
Brushed Bronze	41774147
Brushed Black Chrome	41774347
Matt Black	41774677
Matt White	41774707
Polished Gold Optic	41774997

Measurements within scale drawings are in mm.
Technical specifications and units of measure are subject to change.

AddStoris Pedal Bin

Features

- free-standing
- material: metal
- material recess: plastic
- capacity: 3 l
- with removable insert



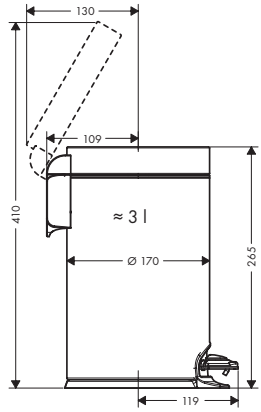

Finish	Code no.
Chrome	41775007
Matt Black	41775677
Matt White	41775707

AddStoris Shaving mirror

Features

- material: mirror glass
- material frame: metal
- mirror is inclinable
- swivelling
- enlargement: 1 x magnification, 3 x magnification
- with mounting material
- concealed fastening
- drilling distance: 31 mm
- diameter drill hole: 6 mm
- wall-mounted



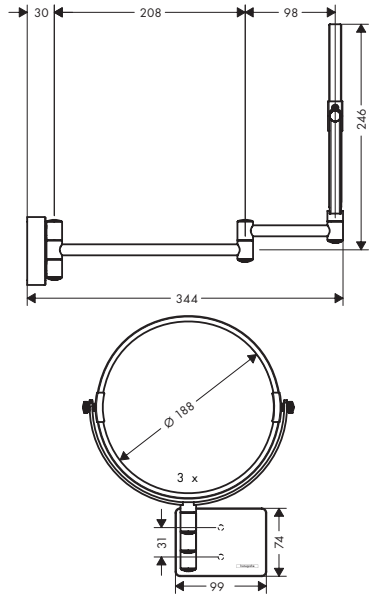

Finish	Code no.
Chrome	41791007
Brushed Bronze	41791147
Brushed Black Chrome	41791347
Matt Black	41791677
Matt White	41791707
Polished Gold Optic	41791997

Measurements within scale drawings are in mm.
Technical specifications and units of measure are subject to change.

Logis Universal Toothbrush tumbler

Features

- wall-mounted
- material: matt glass
- holder material: metal
- with mounting material
- concealed fastening
- drilling distance: 26 mm
- diameter drill hole: 6 mm



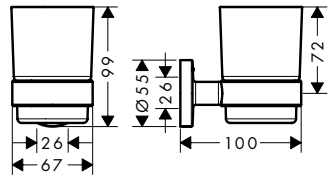

Finish	Code no.
Chrome	41718000

Logis Universal Liquid soap dispenser

Features

- wall-mounted
- holder material: metal
- material container: matt glass
- type of soap: liquid soap
- filling capacity 200 ml
- dosage 2 ml
- with mounting material
- concealed fastening
- drilling distance: 26 mm
- diameter drill hole: 6 mm



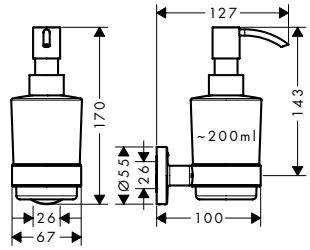

Finish	Code no.
Chrome	41714000

Logis Universal Soap dish

Features

- wall-mounted
- material recess: matt glass
- holder material: metal
- with mounting material
- concealed fastening
- drilling distance: 26 mm
- diameter drill hole: 6 mm



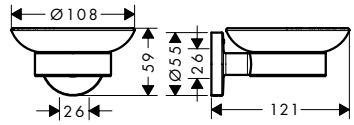

Finish	Code no.
Chrome	41715000

Measurements within scale drawings are in mm.
Technical specifications and units of measure are subject to change.

Logis Universal Corner basket

Features

- wall-mounted
- holder material: metal
- with mounting material
- concealed fastening
- diameter drill hole: 6 mm



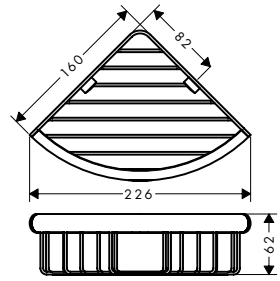

Finish	Code no.
Chrome	41710000

Logis Universal Grab bar

Features

- wall-mounted
- material: brass
- holder material: metal
- length: 345 mm
- with mounting material
- concealed fastening
- drilling distance: 300 mm
- diameter drill hole: 6 mm
- TÜV certified



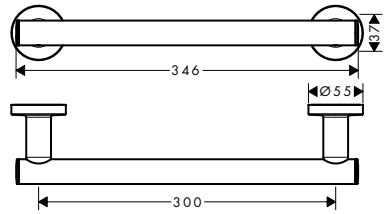

Finish	Code no.
Chrome	41713000

Logis Universal Bath towel rails

Features of all variants

- wall-mounted
- material: brass
- holder material: metal
- length: 644 mm
- with mounting material
- drilling distance: 600 mm
- diameter drill hole: 6 mm
- concealed fastening

single



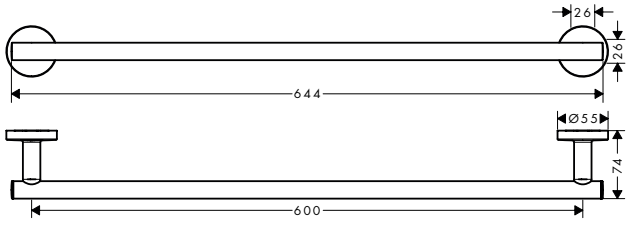

double



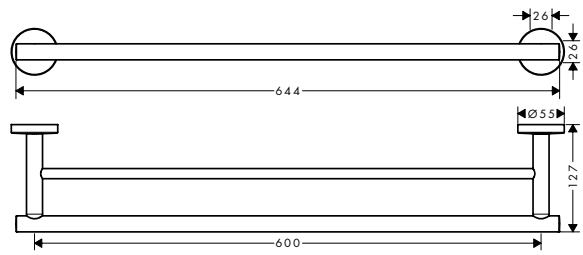

Overview variants

Number of holder	Finish	Code no.
1 holder	Chrome	41716000
2 holders	Chrome	41712000

Measurements within scale drawings are in mm.
Technical specifications and units of measure are subject to change.

Logis Universal Towel rack with towel rail

Features

- wall-mounted
- material: brass
- holder material: metal
- length: 600 mm
- with mounting material
- concealed fastening
- drilling distance: 600 mm
- diameter drill hole: 6 mm



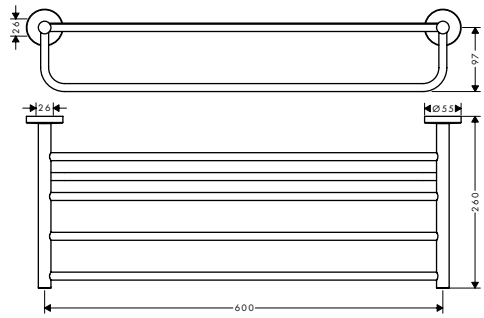

Finish	Code no.
Chrome	41720000

Logis Universal Towel ring

Features

- wall-mounted
- material: brass
- holder material: metal
- fixed
- with mounting material
- concealed fastening
- drilling distance: 26 mm
- diameter drill hole: 6 mm



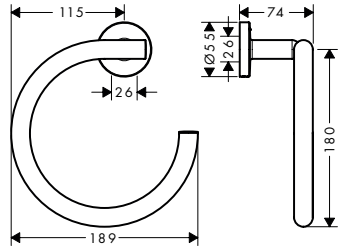

Finish	Code no.
Chrome	41724000

Logis Universal Towel hooks

Features of all variants

- wall-mounted
- material: metal
- with mounting material
- concealed fastening
- diameter drill hole: 6 mm



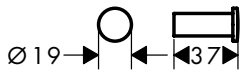



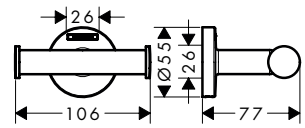

Overview variants

Number of hooks	Finish	Code no.
1 hook	Chrome	41711000
2 hooks	Chrome	41725000

Measurements within scale drawings are in mm.
Technical specifications and units of measure are subject to change.

Logis Universal Toilet paper holders

Features of all variants

- wall-mounted
- material: brass
- with mounting material
- concealed fastening
- drilling distance: 26 mm
- diameter drill hole: 6 mm

without cover



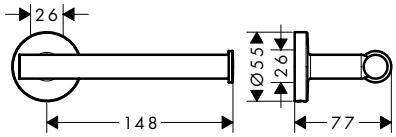

double



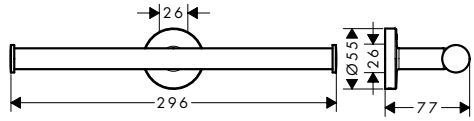

with cover



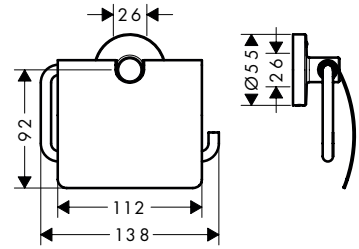

Overview variants

Version	Finish	Code no.
without cover	Chrome	41726000
double	Chrome	41717000
with cover	Chrome	41723000

Logis Universal Toilet brush holder wall-mounted

Features

- wall-mounted
- material: brass
- material recess: matt glass
- with removable insert
- with mounting material
- concealed fastening
- drilling distance 26 mm
- diameter drill hole: 6 mm



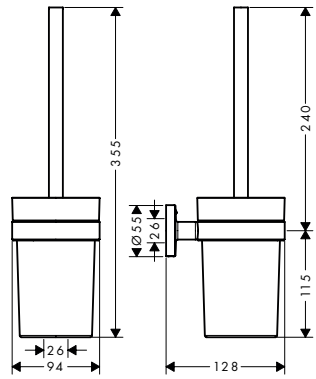

Finish	Code no.
Chrome	41722000

Optional parts:	Finish	Code no.
Replacement toilet brush with handle	Chrome	93286000



Measurements within scale drawings are in mm.
Technical specifications and units of measure are subject to change.

Logis Universal Shaving mirror

Features

- material: mirror glass
- material frame: metal
- mirror is inclinable
- swivelling
- enlargement: 1 x magnification, 3 x magnification
- with mounting material
- concealed fastening
- drilling distance: 50 mm
- diameter drill hole: 6 mm
- wall-mounted



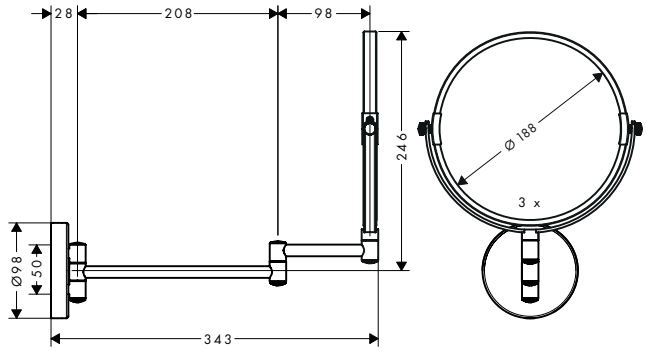

Finish	Code no.
Chrome	73561000

Logis Universal Bathroom accessory sets

Features of all variants

- material: brass

3-part



5-part



Overview variants

Set	Finish	Code no.
3 in 1	Chrome	41727000
5 in 1	Chrome	41728000

Consisting of:	Included in	Code no.
Logis Universal Double bath towel rail	41727000	41712000
Logis Universal Bath towel rail	41728000	41716000
Logis Universal Toilet brush holder wall-mounted	41727000 41728000	41722000
Logis Universal Toilet paper holder with cover	41727000 41728000	41723000
Logis Universal Towel rack with towel rail	41728000	41720000
Logis Universal Towel hook double	41728000	41725000

Measurements within scale drawings are in mm.
Technical specifications and units of measure are subject to change.

Replacement toilet brush with handle



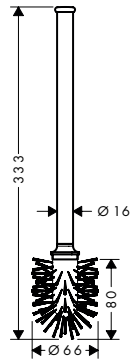

Finish	Code no.
Chrome	40089000

Measurements within scale drawings are in mm.
Technical specifications and units of measure are subject to change.

WallStoris Wall bars

Features of all variants

- consists of: carrier bar, decorative bar
- wall-mounted
- suitable for horizontal and vertical installation
- horizontal installation suitable for wall bar
- ideal for tiles, glass, metal
- application - glue or drill
- including gluing set
- holding force: 5 kg
- material carrier bar: metal
- material decorative bar: plastic
- concealed fastening

500

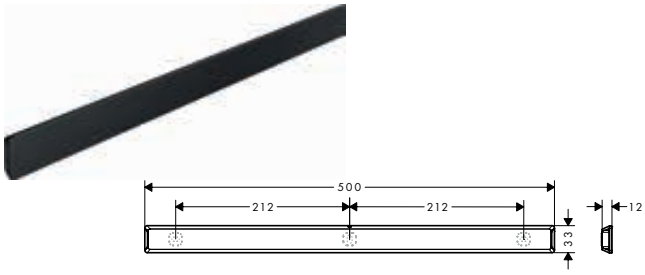

700

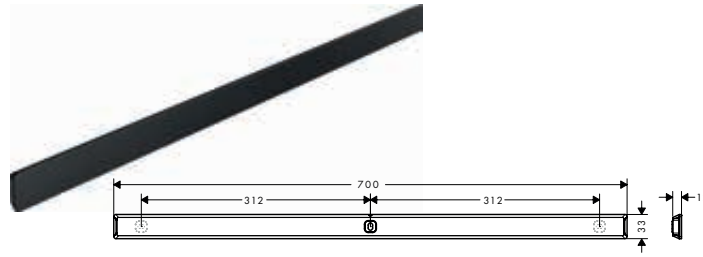

Installation



Overview variants

	Length (mm)	Finish	Code no.
	700	Matt Black	27904670
		Matt White	27904700
	500	Matt Black	27902670
		Matt White	27902700

Optional parts:		Code no.
	Mounting set (3 screws, 3 plugs)	94268000

WallStoris Storage baskets

Features of all variants

- material: plastic dyed through
- recess for draining water
- accessory can be clicked onto the wall bar
- storage for squeegee
- ideal to store shampoo, shower gel, razors
- dishwasher safe, easy to clean

71



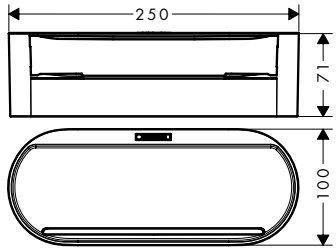

39



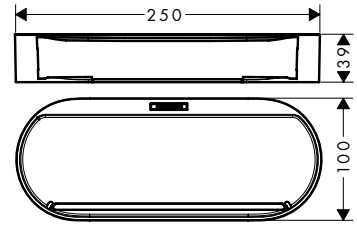

Technologies



Overview variants

	Height (mm)	Finish	Code no.
	71	Matt Black	27912670
		Matt White	27912700
	39	Matt Black	27913670
		Matt White	27913700

Measurements within scale drawings are in mm.
Technical specifications and units of measure are subject to change.

WallStoris Storage baskets

Required parts (choose one):		Finish	Code no.
	WallStoris Wall bar 70 cm	Matt Black	27904670
		Matt White	27904700
	WallStoris Wall bar 50 cm	Matt Black	27902670
		Matt White	27902700

Optional parts:		Finish	Code no.
	WallStoris Squeegee	Matt Black	27916670
		Matt White	27916700
	WallStoris Cover for storage basket	Matt Black	27925670
		Matt White	27925700

WallStoris Shelf

Features

- material shelf: plastic dyed through
- dimensions: 200 x 169 mm
- accessory can be clicked onto the wall bar
- ideal to store razors, mug, candles
- dishwasher safe, easy to clean



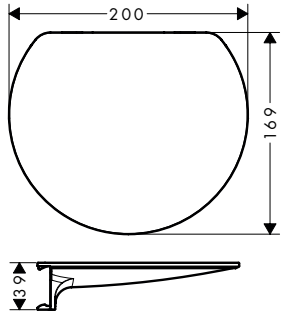

Technologies

EasyClick

Finish	Code no.
Matt Black	27915670
Matt White	27915700

Required parts (choose one):		Finish	Code no.
	WallStoris Wall bar 50 cm	Matt Black	27902670
		Matt White	27902700
	WallStoris Wall bar 70 cm	Matt Black	27904670
		Matt White	27904700

Measurements within scale drawings are in mm.
Technical specifications and units of measure are subject to change.

WallStoris Towel hooks

Features of all variants

- material: plastic dyed through
- accessory can be clicked onto the wall bar
- ideal to hang towels, face cloth, sponges, clothes
- dishwasher safe, easy to clean
- packaging unit: 2 pieces

18 mm



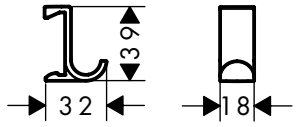

10 mm



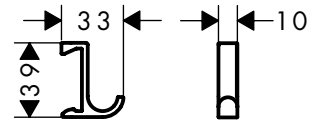

Technologies

EasyClick

Overview variants

	Width (mm)	Finish	Code no.
	18	Matt Black	27914670
		Matt White	27914700
	10	Matt Black	27929670
		Matt White	27929700

Required parts (choose one):	Finish	Code no.
 WallStoris Wall bar 70 cm	Matt Black	27904670
	Matt White	27904700
 WallStoris Wall bar 50 cm	Matt Black	27902670
	Matt White	27902700

WallStoris Towel rail

Features

- consists of: decorative bar, carrier bar
- wall-mounted
- ideal for tiles, glass, metal
- application - glue or drill
- including gluing set
- holding force: 5 kg
- material carrier bar: metal
- material decorative bar: plastic dyed through
- fixed
- length: 581 mm
- concealed fastening



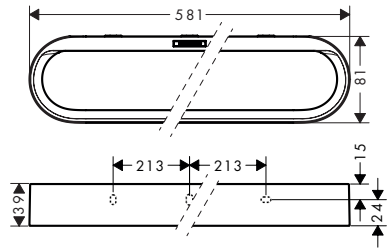

Installation

Glue or Screw Fix

Finish	Code no.
Matt Black	27926670
Matt White	27926700

Optional parts:	Code no.
 Mounting set (3 screws, 3 plugs)	94268000

Measurements within scale drawings are in mm.
Technical specifications and units of measure are subject to change.

WallStoris Squeegee

Features

- material: plastic
- storage option in storage basket
- suitable for glass
- easy to clean
- ergonomic design
- dimensions: 195 x 44 mm



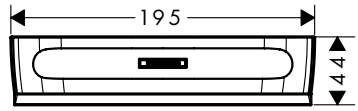

Finish	Code no.
Matt Black	27916670
Matt White	27916700

Optional parts:		Finish	Code no.
	WallStoris Storage basket deep	Matt Black	27912670
		Matt White	27912700
	WallStoris Storage basket	Matt Black	27913670
		Matt White	27913700

WallStoris Push slider

Features

- material: plastic
- for shower hoses with a conical nut
- height-adjustable slider with locking push-button slider
- slider is rotatable – can be used on vertical and horizontal wall bars



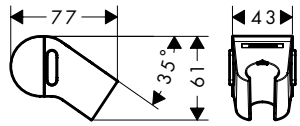

Technologies

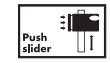

Finish	Code no.
Matt Black	27917670
Matt White	27917700

Required parts:		Finish	Code no.
	WallStoris Wall bar 70 cm	Matt Black	27904670
		Matt White	27904700
	WallStoris Wall bar 50 cm	Matt Black	27902670
		Matt White	27902700

Measurements within scale drawings are in mm.
Technical specifications and units of measure are subject to change.

WallStoris Cover for storage basket

Features

- material: plastic dyed through
- closes storage basket
- offers storage space
- dishwasher safe, easy to clean
- length: 250 mm



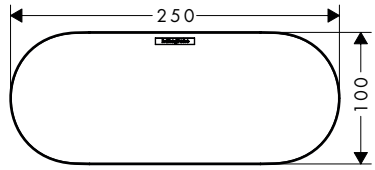

Finish	Code no.
Matt Black	27925670
Matt White	27925700

Required parts:



WallStoris Storage basket

Finish	Code no.
Matt Black	27913670
Matt White	27913700



WallStoris Storage basket deep

Finish	Code no.
Matt Black	27912670
Matt White	27912700

WallStoris Tumbler

Features

- consists of: tumbler, partition wall
- material: plastic dyed through
- recess for draining water
- accessory can be clicked onto the wall bar
- ideal to store shampoo, razors, tooth paste
- with a partition that can be repositioned or removed
- dishwasher safe, easy to clean



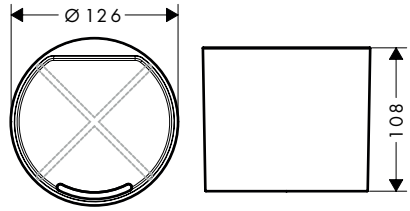

Technologies

EasyClick

Finish	Code no.
Matt Black	27921670
Matt White	27921700

Required parts:



WallStoris Wall bar 50 cm

Finish	Code no.
Matt Black	27902670
Matt White	27902700



WallStoris Wall bar 70 cm

Finish	Code no.
Matt Black	27904670
Matt White	27904700

Measurements within scale drawings are in mm.
Technical specifications and units of measure are subject to change.

WallStoris Toilet paper holder with shelf

Features

- wall-mounted
- material: plastic dyed through
- with mounting material
- concealed fastening
- open form - toilet paper can easily be hung
- suitable for roll widths up to 122 mm
- with storage space
- application - glue or drill
- including gluing set
- length 230 mm



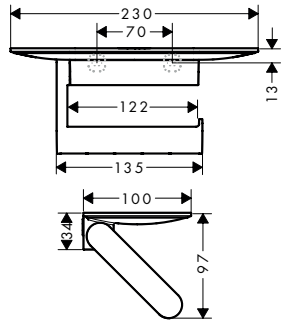

Installation

Glue or Screw Fix

Finish	Code no.
Matt Black	27928670
Matt White	27928700

Optional parts:	Code no.
Mounting set (3 screws, 3 plugs)	94268000

WallStoris Toilet brush holder

Features

- wall-mounted
- material: plastic dyed through
- material recess: matt plastic
- with removable insert
- concealed fastening
- removable container and easy to clean
- including toilet brush
- brush head black
- application - glue or drill
- including gluing set
- ergonomic handle



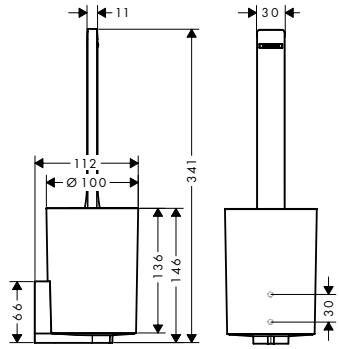

Installation

Glue or Screw Fix

Finish	Code no.
Matt Black	27927670
Matt White	27927700

Optional parts:	Code no.
Mounting set (3 screws, 3 plugs)	94268000

Measurements within scale drawings are in mm.
Technical specifications and units of measure are subject to change.

WallStoris Shower bundle

Features

- consists of: wall bar, storage basket, squeegee, towel hook
- material: plastic dyed through
- wall-mounted
- ideal for tiles, glass, metal
- application - glue or drill
- including gluing set
- accessory can be clicked onto the wall bar
- storage for squeegee
- ideal to hang towels, face cloth, sponges, clothes
- ideal to store shampoo, shower gel, razors
- easy to clean
- concealed fastening
- recess for draining water



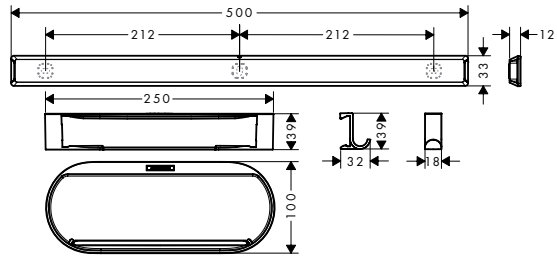

Technologies

EasyClick

Installation

Glue or Screw Fix

Finish	Code no.
Matt Black	27967670
Matt White	27967700

Consisting of:		Included in	Code no.
	WallStoris Wall bar 50 cm	27967XXX	27902XXX
	WallStoris Storage basket	27967XXX	27913XXX
	WallStoris Towel hook wide	27967XXX	27914XXX
	WallStoris Squeegee	27967XXX	27916XXX

WallStoris Bathroom accessory sets

Features of all variants

- material: plastic dyed through
- application - glue or drill
- including gluing set
- concealed fastening

bathroom set



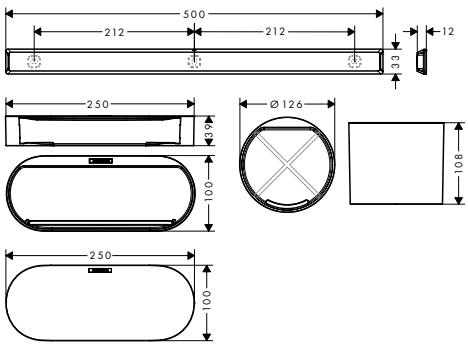

bathtub set



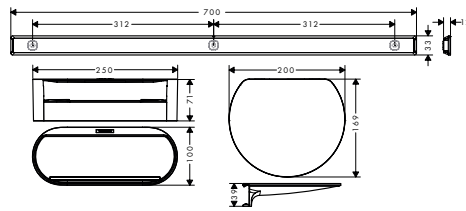

toilet set



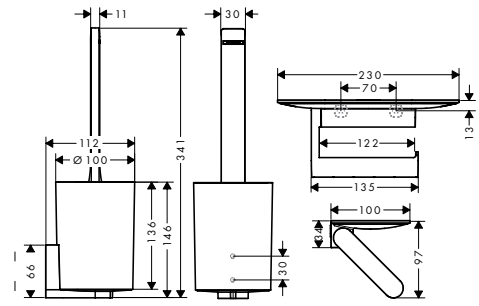

Technologies

EasyClick

Installation

Glue or Screw Fix

Measurements within scale drawings are in mm.
Technical specifications and units of measure are subject to change.

WallStoris Bathroom accessory sets

Overview variants

Set	Finish	Code no.
bathroom set	Matt Black	27968670
	Matt White	27968700
bathtub set	Matt Black	27966670
	Matt White	27966700
toilet set	Matt Black	27969670
	Matt White	27969700

Consisting of:	Included in	Code no.
 WallStoris Wall bar 50 cm	27968XXX	27902XXX
 WallStoris Wall bar 70 cm	27966XXX	27904XXX
 WallStoris Shelf	27966XXX	27915XXX
 WallStoris Storage basket	27968XXX	27913XXX
 WallStoris Storage basket deep	27966XXX	27912XXX
 WallStoris Tumbler	27968XXX	27921XXX
 WallStoris Cover for storage basket	27968XXX	27925XXX
 WallStoris Toilet brush holder	27969XXX	27927XXX
 WallStoris Toilet paper holder with shelf	27969XXX	27928XXX

Optional parts:	For	Code no.
 Mounting set (3 screws, 3 plugs)	27969XXX	94268000

WallStoris Bundles

Features of all variants

- spray type hand shower: PowderRain, IntenseRain, MonoRain
- convenient spray selection via Select button
- shape: round
- swivel joint: pivot connector prevents hose from tangling
- maximum flow rate at 3 bar: 8,5 l/min
- installation: wall
- number of sprays: 3 spray modes
- shower head size: 105 mm
- dirt filter: rinseable sieve insert
- suitable for horizontal and vertical installation , application - glue or drill, holding force: 5 kg

with thermostat



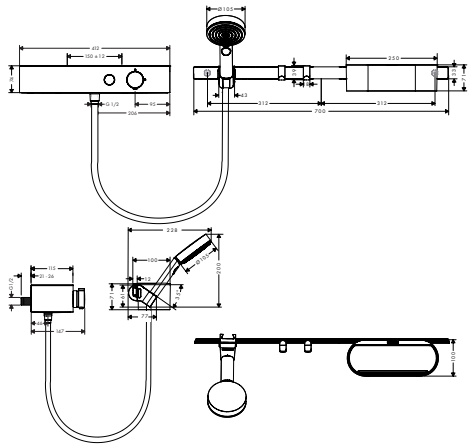

without thermostat



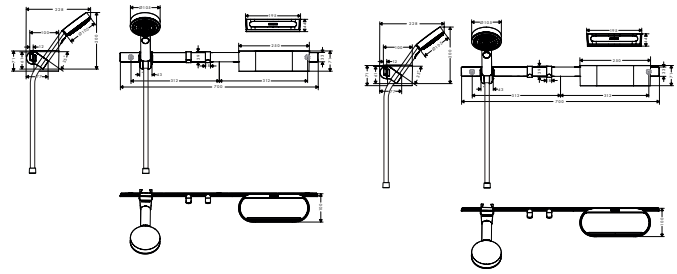

Sustainability

EcoSmart

Technologies

Push slider | EasyClick | XXL Performance

Spray types

Powder Rain | Intense Rain | Mono Rain

Overview variants

	Thermostat	Finish	Code no.
	with shower thermostat	Matt Black	24250670
		Matt White	24250700
	without thermostat	Matt Black	24291670
		Matt White	24291700

Consisting of:		Included in	Code no.
	Pulsify Select S Hand shower 105 3jet Activation EcoSmart	24250XXX 24291XXX	24101XXX
	ShowerTablet Select Shower thermostat 400 for exposed installation	24250XXX	24360XXX
	WallStoris Wall bar 70 cm	24250XXX 24291XXX	27904XXX
	WallStoris Storage basket deep	24250XXX 24291XXX	27912XXX
	WallStoris Towel hook wide	24250XXX 24291XXX	27914XXX
	WallStoris Push slider	24250XXX 24291XXX	27917XXX
	WallStoris Squeegee	24291XXX	27916XXX
	Isiflex Shower hose 160 cm	24250XXX 24291XXX	28276XXX

Optional parts:		For	Finish	Code no.
	S-connections adapter G ¾ for renovation	24250XXX	Chrome	02026000

Measurements within scale drawings are in mm.
Technical specifications and units of measure are subject to change.

WallStoris Planet Edition Wall bar 70 cm

Features

- consists of: carrier bar, decorative bar
- wall-mounted
- suitable for horizontal and vertical installation
- horizontal installation suitable for wall bar
- ideal for tiles, glass, metal
- application - glue or drill
- including gluing set
- holding force: 5 kg
- material carrier bar: metal
- material decorative bar: plastic
- length: 700 mm
- concealed fastening
- drilling distance: 312 mm



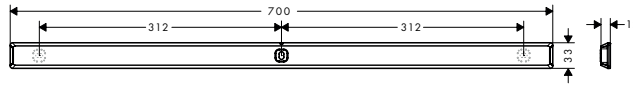

Installation

Glue or Screw Fix

Finish	Code no.
Sand (recycled)	28911210

WallStoris Planet Edition Storage basket

Features

- material: plastic dyed through
- recess for draining water
- dimensions: 250 x 39 mm
- accessory can be clicked onto the wall bar
- storage for squeegee
- ideal to store shampoo, shower gel, razors
- dishwasher safe, easy to clean



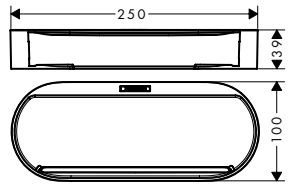

Technologies

EasyClick

Finish	Code no.
Sand (recycled)	28912210

WallStoris Planet Edition Shelf

Features

- material shelf: plastic dyed through
- dimensions: 200 x 169 mm
- accessory can be clicked onto the wall bar
- ideal to store razors, mug, candles
- dishwasher safe, easy to clean



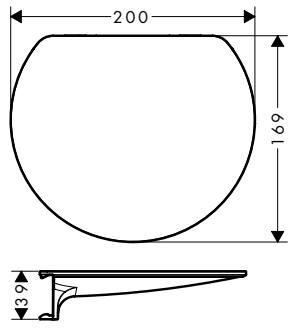

Technologies

EasyClick

Finish	Code no.
Sand (recycled)	28917210

Measurements within scale drawings are in mm.
Technical specifications and units of measure are subject to change.

WallStoris Planet Edition Towel hook wide

Features

- material: plastic dyed through
- accessory can be clicked onto the wall bar
- ideal to hang towels, face cloth, sponges, clothes
- dishwasher safe, easy to clean
- packaging unit: 2 pieces



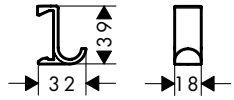

Technologies

EasyClick

Finish	Code no.
Sand (recycled)	28915210

WallStoris Planet Edition Squeegee

Features

- material: plastic
- storage option in storage basket
- suitable for glass
- easy to clean
- ergonomic design
- dimensions: 195 x 44 mm



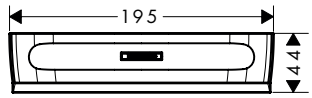

Finish	Code no.
Sand (recycled)	28913210

WallStoris Planet Edition Push slider

Features

- material: plastic
- for shower hoses with a conical nut
- height-adjustable slider with locking push-button slider
- slider is rotatable – can be used on vertical and horizontal wall bars



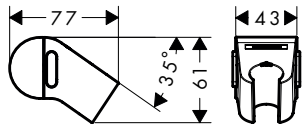

Technologies

Push slider

Finish	Code no.
Sand (recycled)	28918210

Measurements within scale drawings are in mm.
Technical specifications and units of measure are subject to change.

WallStoris Planet Edition Tumbler

Features

- consists of: tumbler, partition wall
- material: plastic dyed through
- recess for draining water
- accessory can be clicked onto the wall bar
- ideal to store shampoo, razors, tooth paste
- with a partition that can be repositioned or removed
- dishwasher safe, easy to clean



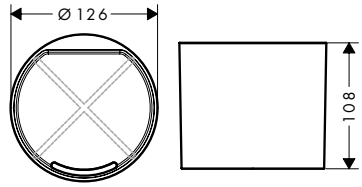

Technologies

EasyClick

Finish	Code no.
Sand (recycled)	28916210

Measurements within scale drawings are in mm.
Technical specifications and units of measure are subject to change.

	CubeStack			MoonWake	
					
Finish	○	○	○	○	○
Width (mm)	650	506	500	400	760
Wash basin	■	■	–	–	–
Wash bowl	–	–	■	■	–
Handrinse basin	–	–	–	–	–
Above counter basin	–	–	–	–	■
Under counter basin	–	–	–	–	–
Ground	–	–	–	–	–
SmartClean	–	–	■	–	–
Tap hole	–	–	■	–	–
Overflow	■	–	■	–	■
Made to Fit Noise Reduction	–	–	–	–	–
from page	596	596	596	598	598

	LakeShore U		MellowTide Q	MellowTide U
				
Finish	○	○	○	○
Width (mm)	550	550	550	600
Wash basin	–	–	–	–
Wash bowl	■	–	–	–
Handrinse basin	–	–	–	–
Above counter basin	–	–	–	–
Under counter basin	–	■	■	■
Ground	–	–	–	–
SmartClean	–	■	–	–
Tap hole	–	–	–	–
Overflow	–	■	■	■
Made to Fit Noise Reduction	–	–	–	–
from page	607	608	600	601

■ available depending on the model
– not available

	LakeShore Q				
					
Finish	○	○	○	○	○
Width (mm)	500	500	600	500	550
Wash basin	–	–	–	–	–
Wash bowl	■	■	■	–	■
Handrinse basin	–	–	–	–	–
Above counter basin	–	–	–	–	–
Under counter basin	–	–	–	■	–
Ground	–	–	–	–	–
SmartClean	–	–	–	■	–
Tap hole	–	■	■	–	■
Overflow	–	■	■	■	■
Made to Fit Noise Reduction	–	–	–	–	–
from page	606	606	606	607	607

Washbasins

Xuniva S



Finish	○	○	○	○	○
Width (mm)	300	400	450	400	450
Wash basin	–	–	–	–	–
Wash bowl	■	■	■	–	–
Handrinse basin	–	–	–	–	–
Above counter basin	–	–	–	–	–
Under counter basin	–	–	–	■	■
Ground	–	–	–	–	–
SmartClean	■	■	■	■	■
Tap hole	–	–	■	–	■
Overflow	–	–	■	■	■
Made to Fit Noise Reduction	–	–	–	–	–
from page	610	610	611	612	612

Xuniva Q



Finish	○	○	○	○	○
Width (mm)	300	550	600	550	550
Wash basin	–	–	–	–	–
Wash bowl	■	■	■	–	–
Handrinse basin	–	–	–	–	–
Above counter basin	–	–	–	–	–
Under counter basin	–	–	–	■	■
Ground	–	–	–	–	–
SmartClean	■	■	■	■	■
Tap hole	–	–	■	–	■
Overflow	–	–	■	■	■
Made to Fit Noise Reduction	–	–	–	–	–
from page	614	614	615	616	616

■ available depending on the model
– not available

Xuniva S



Finish	○
Width (mm)	350
Wash basin	–
Wash bowl	–
Handrinse basin	–
Above counter basin	–
Under counter basin	■
Ground	–
SmartClean	■
Tap hole	–
Overflow	■
Made to Fit Noise Reduction	–
from page	613

Xuniva Q



Finish	○
Width (mm)	450
Wash basin	–
Wash bowl	–
Handrinse basin	–
Above counter basin	–
Under counter basin	■
Ground	–
SmartClean	■
Tap hole	–
Overflow	■
Made to Fit Noise Reduction	–
from page	617

Washbasins

	Xuniva D				
					
Finish	○	○	○	○	○
Width (mm)	550	600	550	550	450
Wash basin	–	–	–	–	–
Wash bowl	■	■	–	–	–
Handrinse basin	–	–	–	–	–
Above counter basin	–	–	■	–	–
Under counter basin	–	–	■	■	■
Ground	–	–	–	–	–
SmartClean	■	■	■	■	■
Tap hole	–	■	–	■	–
Overflow	–	■	■	■	■
Made to Fit Noise Reduction	–	–	–	–	–
from page	618	618	619	620	620

■ available depending on the model
– not available

	Xuniva U				
					
Finish	○	○	○	○	○
Width (mm)	550	600	550	550	450
Wash basin	–	–	–	–	–
Wash bowl	■	■	–	–	–
Handrinse basin	–	–	–	–	–
Above counter basin	–	–	–	–	–
Under counter basin	–	–	■	■	■
Ground	–	–	–	–	–
SmartClean	■	■	■	■	■
Tap hole	–	■	–	■	–
Overflow	–	■	■	■	■
Made to Fit Noise Reduction	–	–	–	–	–
from page	621	622	622	623	624

Highlights

Technologies

Chemical Resistant

Enameled surface can protect from daily chemicals

Hygienic

Ultra-smooth surface keeps hygienic and nothing to hide

Impact Resistant

Solid titanium steel can resist impact in accidence

Scratch Resistant

Enameled titanium steel protects from scratch

Smart Clean

High-quality glaze that prevents dirt particles from adhering to the product. For more hygiene and less cleaning effort.

Finishes



Brushed Black Chrome



Brushed Bronze

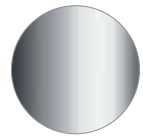

Chrome



Matt Black

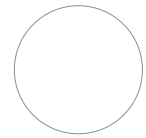

Matt White

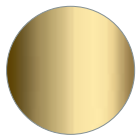

Polished Gold Optic

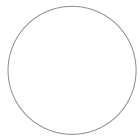

White



CubeStack

CubeStack Above counter basin 650/390 without tap hole and with overflow, SmartClean

Features

- material: steel enamel
- basin inner height: 128 mm
- degree of gloss ceramic: glossy
- without tap hole
- with overflow
- without shelf
- without waste set
- installation type: built-in
- with mounting material



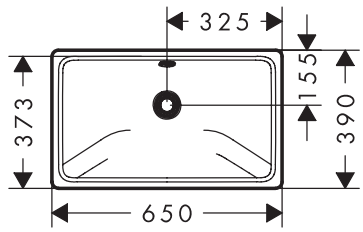

Technologies

Impact Resistant · Scratch Resistant · Hygienic · Chemical Resistant

Finish	Code no.
White	22413007

CubeStack Bowl 506/380 without tap hole and overflow, SmartClean

Features

- material: steel enamel
- basin inner height: 128 mm
- degree of gloss ceramic: glossy
- without tap hole
- without overflow
- without shelf
- without waste set
- suitable for wall-mounted basin mixers or basin mixers with raised base
- only in conjunction with basin mixers without pull rod
- installation type: built-on
- with mounting material



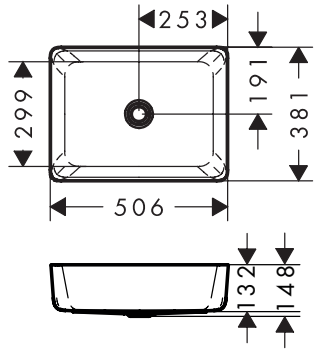

Technologies

Impact Resistant · Scratch Resistant · Hygienic · Chemical Resistant

Finish	Code no.
White	22414007

CubeStack Wash bowl 500/460 with tap hole and ovrflow, SmartClean

Features

- material: steel enamel
- basin inner height: 128 mm
- SmartClean: dirt-repellent glaze
- degree of gloss ceramic: glossy
- with one tap hole
- with overflow
- without shelf
- without waste set
- installation type: built-on
- with mounting material



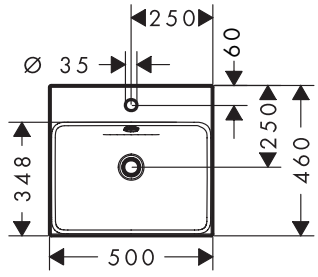

Technologies

Impact Resistant · Scratch Resistant · Hygienic · Chemical Resistant · Smart Clean

Finish	Code no.
White	22415007

Measurements within scale drawings are in mm.
Technical specifications and units of measure are subject to change.



MoonWake

MoonWake Bowl 400/400 without tap hole and overflow

Features

- material: steel enamel
- basin inner height: 130 mm
- degree of gloss ceramic: glossy
- without tap hole
- without overflow
- without shelf
- without waste set
- suitable for wall-mounted basin mixers or basin mixers with raised base
- only in conjunction with basin mixers without pull rod
- installation type: built-on
- with mounting material



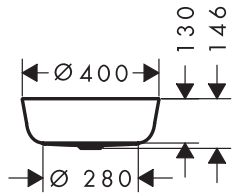

Technologies

Impact Resistant · Scratch Resistant · Hygienic · Chemical Resistant

Finish	Code no.
White	22422007

MoonWake Above counter basin 760/390 without tap hole and with overflow

Features

- material: steel enamel
- basin inner height: 124 mm
- degree of gloss ceramic: glossy
- without tap hole
- with overflow
- without shelf
- without waste set
- installation type: built-in
- with mounting material



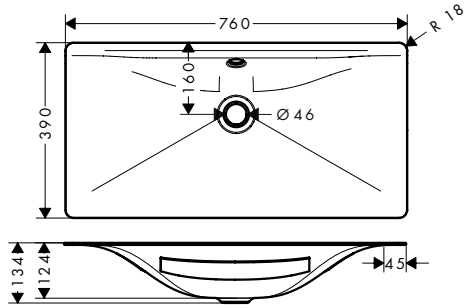

Technologies

Impact Resistant · Scratch Resistant · Hygienic · Chemical Resistant

Finish	Code no.
White	22421007

Measurements within scale drawings are in mm.
Technical specifications and units of measure are subject to change.



MellowTide

MellowTide Q Wash bowl 600/390 without tap hole

Features

- material: ceramic
- basin inner height: 117 mm
- degree of gloss ceramic: glossy
- without tap hole
- without overflow
- without waste set
- installation type: built-on



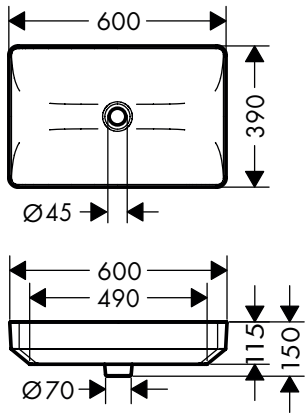

Finish	Code no.
White	22426007

MellowTide Q Wash bowl 600/390 without tap hole with shelf

Features

- material: ceramic
- basin inner height: 117 mm
- degree of gloss ceramic: glossy
- without overflow
- with shelf right
- without waste set
- installation type: built-on



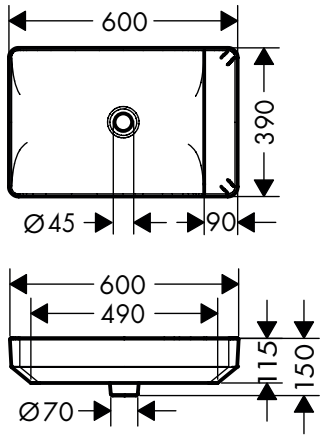

Finish	Code no.
White	22425007

Measurements within scale drawings are in mm.
Technical specifications and units of measure are subject to change.

MellowTide Q Wash bowl 600/440 with tap hole

Features

- material: ceramic
- basin inner height: 117 mm
- degree of gloss ceramic: glossy
- with one tap hole
- with overflow
- without waste set
- installation type: built-on



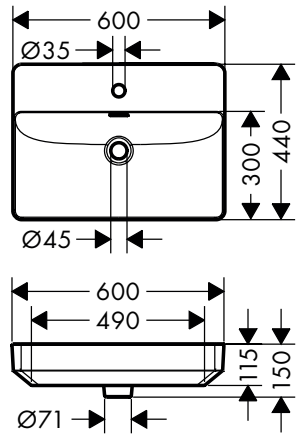

Finish	Code no.
White	22427007

MellowTide Q Wash bowl 600/440 with tap hole and shelf

Features

- material: ceramic
- basin inner height: 117 mm
- degree of gloss ceramic: glossy
- with one tap hole
- with overflow
- with shelf right
- without waste set
- installation type: built-on



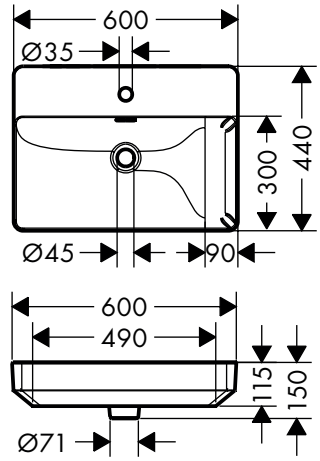

Finish	Code no.
White	22428007

Measurements within scale drawings are in mm.
Technical specifications and units of measure are subject to change.

MellowTide Q Under counter basin 550/350 without tap hole

Features

- material: ceramic
- basin inner height: 120 mm
- degree of gloss ceramic: glossy
- without tap hole
- with overflow
- without waste set
- installation type: undercounter
- with mounting material



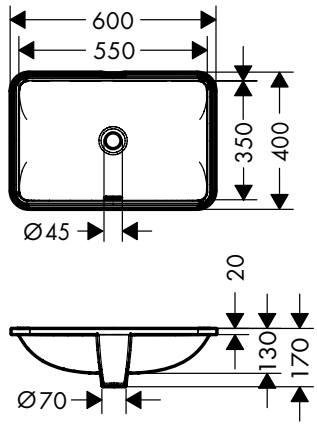

Finish	Code no.
White	22430007

MellowTide U Wash bowl 675/395 without tap hole

Features

- material: ceramic
- basin inner height: 117 mm
- degree of gloss ceramic: glossy
- without tap hole
- without overflow
- without waste set
- installation type: built-on



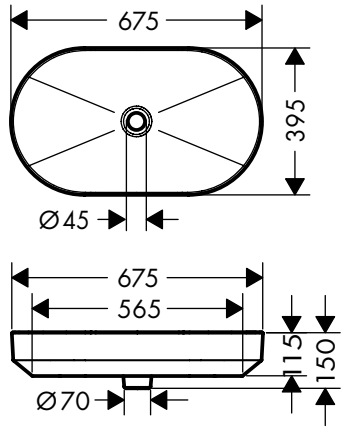

Finish	Code no.
White	22424007

Measurements within scale drawings are in mm.
Technical specifications and units of measure are subject to change.

MellowTide U Wash bowl 675/395 without tap hole with shelf

Features

- material: ceramic
- basin inner height: 115 mm
- degree of gloss ceramic: glossy
- without tap hole
- without overflow
- with shelf right
- without waste set
- installation type: built-on



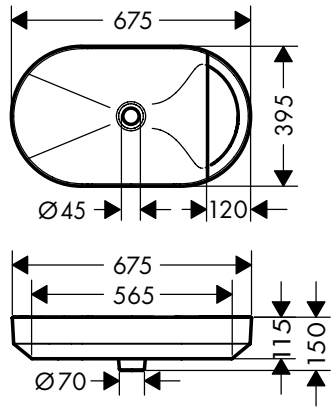

Finish	Code no.
White	22423007

MellowTide U Under counter basin 600/350 without tap hole

Features

- material: ceramic
- basin inner height: 120 mm
- degree of gloss ceramic: glossy
- without tap hole
- with overflow
- without waste set
- installation type: undercounter
- with mounting material



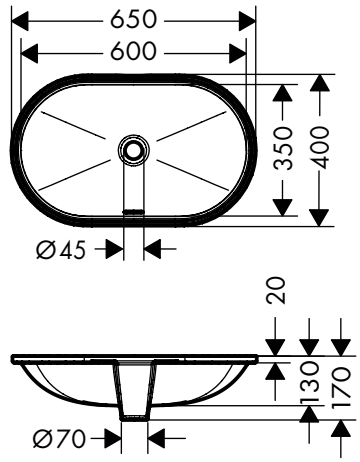

Finish	Code no.
White	22429007

Measurements within scale drawings are in mm.
Technical specifications and units of measure are subject to change.

MellowTide Waste set non-closing for wash basins with ceramic cover

Features

- non-closing valve
- for washbasins without overflow
- drain plug material stainless steel
- connection dimension G 1¼
- with tube and ceramic cover



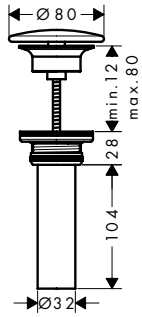

Finish	Code no.
White	50120007

Measurements within scale drawings are in mm.
Technical specifications and units of measure are subject to change.



LakeShore

LakeShore Q Wash bowl 500/380 without tap hole and overflow, SmartClean

Features

- material: ceramic
- basin inner height: 119 mm
- degree of gloss ceramic: glossy
- without tap hole
- without overflow
- without waste set
- installation type: built-on

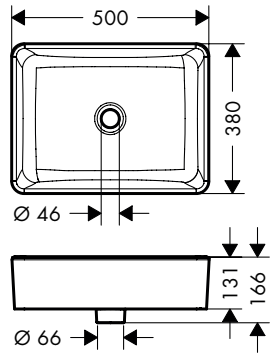

Finish	Code no.
White	22438007

LakeShore Q Wash bowl 500/440 with tap hole and overflow, SmartClean

Features

- material: ceramic
- basin inner height: 120 mm
- degree of gloss ceramic: glossy
- with one tap hole
- with overflow
- without waste set
- installation type: built-on



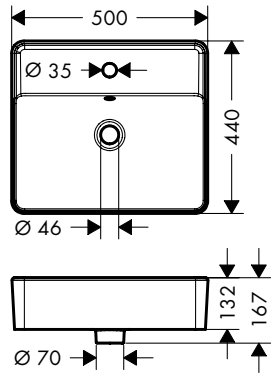

Finish	Code no.
White	22439007

LakeShore Q Wash bowl 600/440 with tap hole and overflow, SmartClean

Features

- material: ceramic
- basin inner height: 120 mm
- degree of gloss ceramic: glossy
- with one tap hole
- with overflow
- without waste set
- installation type: built-on



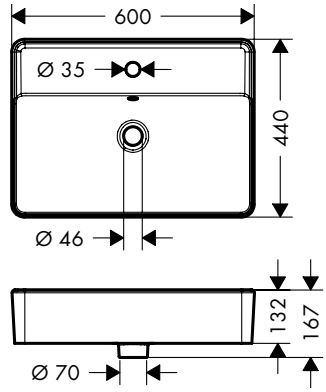

Finish	Code no.
White	22440007

Measurements within scale drawings are in mm.
Technical specifications and units of measure are subject to change.

LakeShore Q Under counter basin 500/350 without tap hole and with overflow, SmartClean

Features

- material: ceramic
- basin inner height: 140 mm
- SmartClean: dirt-repellent glaze
- degree of gloss ceramic: glossy
- without tap hole
- with overflow
- without waste set
- installation type: undercounter
- with mounting material



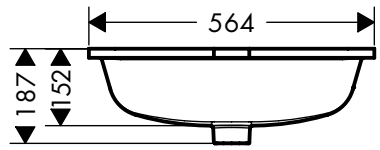

Technologies

Smart Clean

Finish	Code no.
White	22443007

LakeShore Q Semi counter basin 500/440 with tap hole and overflow, SmartClean

Features

- material: ceramic
- basin inner height: 120 mm
- degree of gloss ceramic: glossy
- without tap hole
- with overflow
- without waste set
- installation type: semi built-in



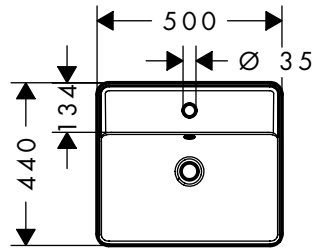

Finish	Code no.
White	22444007

LakeShore U Wash bowl 550/350 without tap hole and overflow, SmartClean

Features

- material: ceramic
- basin inner height: 120 mm
- degree of gloss ceramic: glossy
- without tap hole
- without overflow
- without waste set
- installation type: built-on



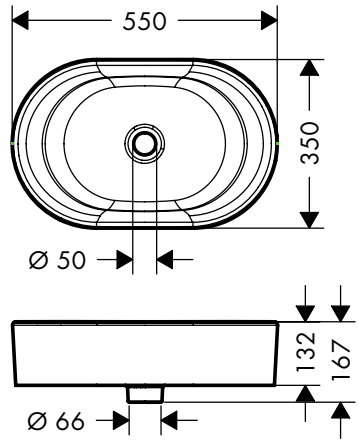

Finish	Code no.
White	22437007

Measurements within scale drawings are in mm.
Technical specifications and units of measure are subject to change.

LakeShore U Under counter basin 530/330 without tap hole and with overflow, SmartClean

Features

- material: ceramic
- basin inner height: 140 mm
- SmartClean: dirt-repellent glaze
- degree of gloss ceramic: glossy
- without tap hole
- with overflow
- without waste set
- installation type: undercounter
- with mounting material



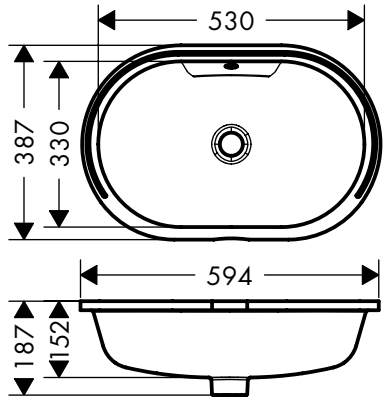

Technologies

Finish	Code no.
White	22441007

Measurements within scale drawings are in mm.
Technical specifications and units of measure are subject to change.



Xuniva

Xuniva S Wash bowls

Features of all variants

- material: ceramic
- basin inner height: 95 mm
- degree of gloss ceramic: glossy
- without tap hole
- without overflow
- without shelf
- without waste set
- installation type: built-on
- with mounting material

300/300

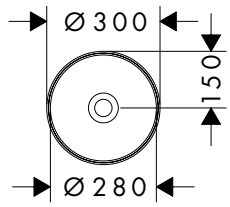

Technologies

Smart Clean

Overview variants

	SmartClean	Finish	Code no.
	–	White	60163450
	■	White	61070450

Optional parts:		Finish	Code no.
	Design trap Flowstar	Chrome	52100000
	Design trap Flowstar S	Chrome	52105000
		Brushed Bronze	52105140
		Brushed Black Chrome	52105340
		Matt Black	52105670
		Matt White	52105700
		Polished Gold Optic	52105990
	Pipe trap easy to install	Chrome	53010000

Xuniva S Wash bowls

Features of all variants

- material: ceramic
- basin inner height: 95 mm
- degree of gloss ceramic: glossy
- without tap hole
- without overflow
- without shelf
- without waste set
- installation type: built-on
- with mounting material

400/400

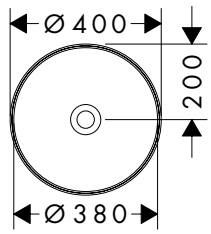

Technologies

Smart Clean

Overview variants

	SmartClean	Finish	Code no.
	–	White	60164450

Measurements within scale drawings are in mm.
Technical specifications and units of measure are subject to change.

Xuniva S Wash bowls

Overview variants

	SmartClean	Finish	Code no.
	■	White	61071450

Optional parts:		Finish	Code no.
	Design trap Flowstar	Chrome	52100000
	Design trap Flowstar S	Chrome	52105000
		Brushed Bronze	52105140
		Brushed Black Chrome	52105340
		Matt Black	52105670
		Matt White	52105700
		Polished Gold Optic	52105990
	Pipe trap easy to install	Chrome	53010000

Xuniva S Wash bowls

Features of all variants

- material: ceramic
- basin inner height: 95 mm
- degree of gloss ceramic: glossy
- with one tap hole
- with overflow
- without shelf
- without waste set
- installation type: built-on
- with mounting material
- suitable for Xelu vanity units with console

450/450



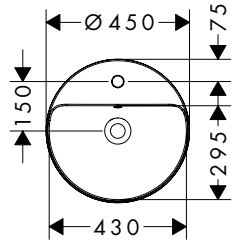

Technologies

Smart Clean

Overview variants

SmartClean	Overflow	Finish	Code no.
–	■	White	60169450
■	■	White	61076450

Optional parts:		Finish	Code no.
	Design trap Flowstar	Chrome	52100000
	Design trap Flowstar S	Chrome	52105000
		Brushed Bronze	52105140
		Brushed Black Chrome	52105340
		Matt Black	52105670
		Matt White	52105700
		Polished Gold Optic	52105990
	Pipe trap easy to install	Chrome	53010000

Measurements within scale drawings are in mm.
Technical specifications and units of measure are subject to change.

Xuniva S Above counter basins

Features of all variants

- material: ceramic
- basin inner height: 130 mm
- degree of gloss ceramic: glossy
- without tap hole
- with overflow
- without shelf
- without waste set
- installation type: built-in

400/400



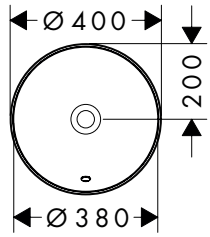

Technologies

Smart Clean

Overview variants

SmartClean	Overflow	Finish	Code no.
–	■	White	60155450
■	■	White	61054450

Optional parts:		Finish	Code no.
	Design trap Flowstar	Chrome	52100000
	Design trap Flowstar S	Chrome	52105000
		Brushed Bronze	52105140
		Brushed Black Chrome	52105340
		Matt Black	52105670
		Matt White	52105700
		Polished Gold Optic	52105990
	Pipe trap easy to install	Chrome	53010000

Xuniva S Above counter basins

Features of all variants

- material: ceramic
- basin inner height: 130 mm
- degree of gloss ceramic: glossy
- with one tap hole
- with overflow
- without shelf
- without waste set
- installation type: built-in

450/450



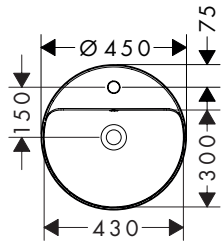

Technologies

Smart Clean

Overview variants

SmartClean	Overflow	Finish	Code no.
–	■	White	60159450

Measurements within scale drawings are in mm.
Technical specifications and units of measure are subject to change.

Xuniva S Above counter basins

Overview variants

SmartClean	Overflow	Finish	Code no.
■	■	White	61056450

Articles which are not on stock will be produced after receipt of order.

Optional parts:		Finish	Code no.
	Design trap Flowstar	Chrome	52100000
	Design trap Flowstar S	Chrome	52105000
		Brushed Bronze	52105140
		Brushed Black Chrome	52105340
		Matt Black	52105670
		Matt White	52105700
		Polished Gold Optic	52105990
	Pipe trap easy to install	Chrome	53010000

Xuniva S Undercounter basins

Features of all variants

- material: ceramic
- basin inner height: 130 mm
- degree of gloss ceramic: glossy
- without tap hole
- with overflow
- without shelf
- without waste set
- installation type: undercounter
- with mounting material

350/350



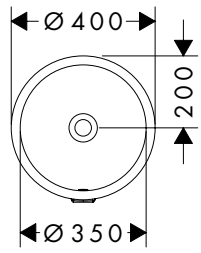

Technologies

Smart Clean

Overview variants

SmartClean	Overflow	Finish	Code no.
–	■	White	60151450
■	■	White	61046450

Optional parts:		Finish	Code no.
	Design trap Flowstar S	Chrome	52105000
		Brushed Bronze	52105140
		Brushed Black Chrome	52105340
		Matt Black	52105670
		Matt White	52105700
		Polished Gold Optic	52105990
	Pipe trap easy to install	Chrome	53010000

Measurements within scale drawings are in mm.
Technical specifications and units of measure are subject to change.

Xuniva Q Wash bowls

Features of all variants

- material: ceramic
- basin inner height: 95 mm
- degree of gloss ceramic: glossy
- without tap hole
- without overflow
- without shelf
- without waste set
- installation type: built-on
- with mounting material

300/300

Technologies

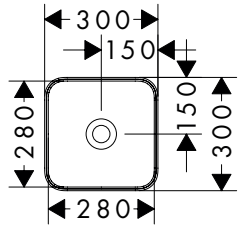

Overview variants

SmartClean	Finish	Code no.
–	White	60167450
■	White	61074450

Optional parts:		Finish	Code no.
	Design trap Flowstar	Chrome	52100000
	Design trap Flowstar S	Chrome	52105000
		Brushed Bronze	52105140
		Brushed Black Chrome	52105340
		Matt Black	52105670
		Matt White	52105700
		Polished Gold Optic	52105990
	Pipe trap easy to install	Chrome	53010000

Xuniva Q Wash bowls

Features of all variants

- material: ceramic
- basin inner height: 95 mm
- degree of gloss ceramic: glossy
- without tap hole
- without overflow
- without shelf
- without waste set
- installation type: built-on
- with mounting material
- suitable for Xelu vanity units with console

550/400

Technologies

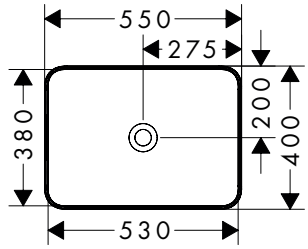

Overview variants

SmartClean	Finish	Code no.
–	White	60168450

Measurements within scale drawings are in mm.
Technical specifications and units of measure are subject to change.

Xuniva Q Wash bowls

Overview variants

	SmartClean	Finish	Code no.
	■	White	61075450

Optional parts:		Finish	Code no.
	Design trap Flowstar	Chrome	52100000
	Design trap Flowstar S	Chrome	52105000
		Brushed Bronze	52105140
		Brushed Black Chrome	52105340
		Matt Black	52105670
		Matt White	52105700
		Polished Gold Optic	52105990
	Pipe trap easy to install	Chrome	53010000

Xuniva Q Wash bowls

Features of all variants

- material: ceramic
- basin inner height: 95 mm
- degree of gloss ceramic: glossy
- with one tap hole
- with overflow
- without shelf
- without waste set
- installation type: built-on
- with mounting material
- suitable for Xelu vanity units with console

600/450



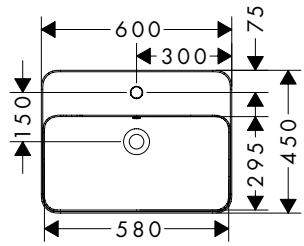

Technologies

Smart Clean

Overview variants

SmartClean	Overflow	Finish	Code no.
–	■	White	60172450
■	■	White	61082450

Optional parts:		Finish	Code no.
	Design trap Flowstar	Chrome	52100000
	Design trap Flowstar S	Chrome	52105000
		Brushed Bronze	52105140
		Brushed Black Chrome	52105340
		Matt Black	52105670
		Matt White	52105700
		Polished Gold Optic	52105990
	Pipe trap easy to install	Chrome	53010000

Measurements within scale drawings are in mm.
Technical specifications and units of measure are subject to change.

Xuniva Q Above counter basins

Features of all variants

- material: ceramic
- basin inner height: 130 mm
- degree of gloss ceramic: glossy
- without tap hole
- with overflow
- without shelf
- without waste set
- installation type: built-in

550/400



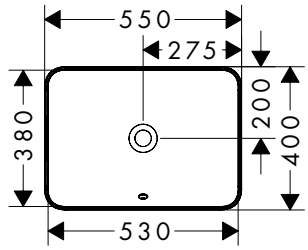

Technologies

Smart Clean

Overview variants

SmartClean	Overflow	Finish	Code no.
–	■	White	60158450
■	■	White	61066450

Optional parts:		Finish	Code no.
	Design trap Flowstar	Chrome	52100000
	Design trap Flowstar S	Chrome	52105000
		Brushed Bronze	52105140
		Brushed Black Chrome	52105340
		Matt Black	52105670
		Matt White	52105700
		Polished Gold Optic	52105990
	Pipe trap easy to install	Chrome	53010000

Xuniva Q Above counter basins

Features of all variants

- material: ceramic
- basin inner height: 130 mm
- degree of gloss ceramic: glossy
- with one tap hole
- with overflow
- without shelf
- without waste set
- installation type: built-in

550/450



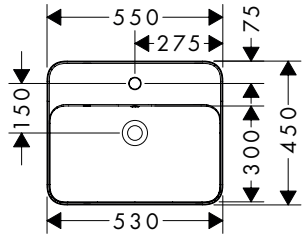

Technologies

Smart Clean

Overview variants

SmartClean	Overflow	Finish	Code no.
–	■	White	60162450

Measurements within scale drawings are in mm.
Technical specifications and units of measure are subject to change.

Xuniva Q Above counter basins

Overview variants

SmartClean	Overflow	Finish	Code no.
■	■	White	61068450

Optional parts:		Finish	Code no.
	Design trap Flowstar	Chrome	52100000
	Design trap Flowstar S	Chrome	52105000
		Brushed Bronze	52105140
		Brushed Black Chrome	52105340
		Matt Black	52105670
		Matt White	52105700
		Polished Gold Optic	52105990
	Pipe trap easy to install	Chrome	53010000

Xuniva Q Undercounter basins

Features of all variants

- material: ceramic
- basin inner height: 130 mm
- degree of gloss ceramic: glossy
- without tap hole
- with overflow
- without shelf
- without waste set
- installation type: undercounter
- with mounting material

450/350



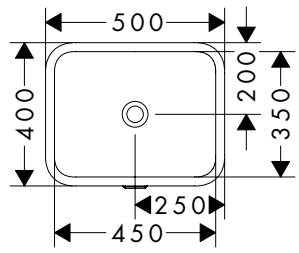

Technologies

Smart Clean

Overview variants

SmartClean	Overflow	Finish	Code no.
–	■	White	60154450
■	■	White	61052450

Optional parts:		Finish	Code no.
	Design trap Flowstar	Chrome	52100000
	Design trap Flowstar S	Chrome	52105000
		Brushed Bronze	52105140
		Brushed Black Chrome	52105340
		Matt Black	52105670
		Matt White	52105700
		Polished Gold Optic	52105990
	Pipe trap easy to install	Chrome	53010000

Measurements within scale drawings are in mm.
Technical specifications and units of measure are subject to change.

Xuniva D Wash bowls

Features of all variants

- material: ceramic
- basin inner height: 95 mm
- degree of gloss ceramic: glossy
- without tap hole
- without overflow
- without shelf
- without waste set
- installation type: built-on
- with mounting material
- suitable for Xelu vanity units with console

550/400

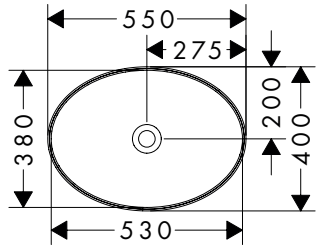

Technologies

Smart Clean

Overview variants

	SmartClean	Finish	Code no.
	–	White	60165450
	■	White	61072450

Optional parts:		Finish	Code no.
	Design trap Flowstar	Chrome	52100000
	Design trap Flowstar S	Chrome	52105000
		Brushed Bronze	52105140
		Brushed Black Chrome	52105340
		Matt Black	52105670
		Matt White	52105700
		Polished Gold Optic	52105990
	Pipe trap easy to install	Chrome	53010000

Xuniva D Wash bowls

Features of all variants

- material: ceramic
- basin inner height: 95 mm
- degree of gloss ceramic: glossy
- with one tap hole
- with overflow
- without shelf
- without waste set
- installation type: built-on
- with mounting material
- suitable for Xelu vanity units with console

600/450



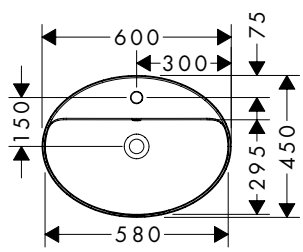

Technologies

Smart Clean

Measurements within scale drawings are in mm.
Technical specifications and units of measure are subject to change.

Xuniva D Wash bowls

Overview variants

SmartClean	Overflow	Finish	Code no.
–	■	White	60170450
■	■	White	61078450

Optional parts:		Finish	Code no.
	Design trap Flowstar	Chrome	52100000
	Design trap Flowstar S	Chrome	52105000
		Brushed Bronze	52105140
		Brushed Black Chrome	52105340
		Matt Black	52105670
		Matt White	52105700
		Polished Gold Optic	52105990
	Pipe trap easy to install	Chrome	53010000

Xuniva D Above counter basins

Features of all variants

- material: ceramic
- basin inner height: 130 mm
- degree of gloss ceramic: glossy
- without tap hole
- without shelf
- installation type: built-in

550/400



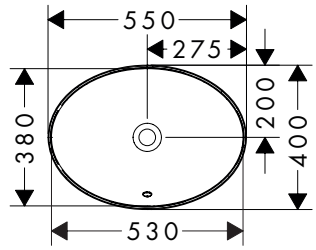

Technologies

Smart Clean

Overview variants

SmartClean	Overflow	Finish	Code no.
–	■	White	60156450
■	–	White	61058450

Optional parts:		Finish	Code no.
	Design trap Flowstar	Chrome	52100000
	Design trap Flowstar S	Chrome	52105000
		Brushed Bronze	52105140
		Brushed Black Chrome	52105340
		Matt Black	52105670
		Matt White	52105700
		Polished Gold Optic	52105990
	Pipe trap easy to install	Chrome	53010000

Measurements within scale drawings are in mm.
Technical specifications and units of measure are subject to change.

Xuniva D Above counter basins

Features of all variants

- material: ceramic
- basin inner height: 130 mm
- degree of gloss ceramic: glossy
- with one tap hole
- with overflow
- without shelf
- installation type: built-in

550/450

Technologies



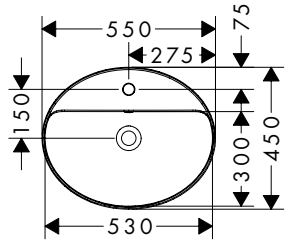

Overview variants

SmartClean	Overflow	Finish	Code no.
–	■	White	60160450
■	■	White	61060450

Optional parts:		Finish	Code no.
	Design trap Flowstar	Chrome	52100000
	Design trap Flowstar S	Chrome	52105000
		Brushed Bronze	52105140
		Brushed Black Chrome	52105340
		Matt Black	52105670
		Matt White	52105700
		Polished Gold Optic	52105990
	Pipe trap easy to install	Chrome	53010000

Xuniva D Undercounter basins

Features of all variants

- material: ceramic
- basin inner height: 130 mm
- degree of gloss ceramic: glossy
- without tap hole
- with overflow
- without shelf
- installation type: undercounter
- with mounting material

450/350

Technologies



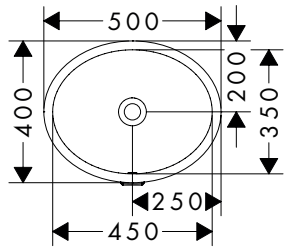

Overview variants

SmartClean	Overflow	Finish	Code no.
–	■	White	60152450

Measurements within scale drawings are in mm.
Technical specifications and units of measure are subject to change.

Xuniva D Undercounter basins

Overview variants

SmartClean	Overflow	Finish	Code no.
■	■	White	61048450

Optional parts:		Finish	Code no.
	Design trap Flowstar	Chrome	52100000
	Design trap Flowstar S	Chrome	52105000
		Brushed Bronze	52105140
		Brushed Black Chrome	52105340
		Matt Black	52105670
		Matt White	52105700
		Polished Gold Optic	52105990
	Pipe trap easy to install	Chrome	53010000

Xuniva U Wash bowls

Features of all variants

- material: ceramic
- basin inner height: 95 mm
- degree of gloss ceramic: glossy
- without tap hole
- without overflow
- without shelf
- without waste set
- installation type: built-on
- with mounting material
- suitable for Xelu vanity units with console

550/400

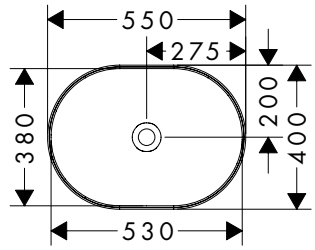

Technologies

Smart Clean

Overview variants

SmartClean	Finish	Code no.
–	White	60166450
■	White	61073450

Optional parts:		For	Finish	Code no.
	Design trap Flowstar	60166XXX	Chrome	52100000
	Design trap Flowstar S		Chrome	52105000
			Brushed Bronze	52105140
			Brushed Black Chrome	52105340
			Matt Black	52105670
			Matt White	52105700
			Polished Gold Optic	52105990
	Pipe trap easy to install		Chrome	53010000

Measurements within scale drawings are in mm.
Technical specifications and units of measure are subject to change.

Xuniva U Wash bowls

Features of all variants

- material: ceramic
- basin inner height: 95 mm
- degree of gloss ceramic: glossy
- with one tap hole
- with overflow
- without shelf
- without waste set
- installation type: built-on
- with mounting material
- suitable for Xelu vanity units with console

600/450



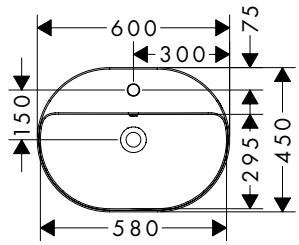

Technologies

Smart Clean

Overview variants

SmartClean	Overflow	Finish	Code no.
–	■	White	60171450
■	■	White	61080450

Optional parts:		Finish	Code no.
	Design trap Flowstar	Chrome	52100000
	Design trap Flowstar S	Chrome	52105000
		Brushed Bronze	52105140
		Brushed Black Chrome	52105340
		Matt Black	52105670
		Matt White	52105700
		Polished Gold Optic	52105990
	Pipe trap easy to install	Chrome	53010000

Xuniva U Above counter basins

Features of all variants

- material: ceramic
- basin inner height: 130 mm
- degree of gloss ceramic: glossy
- without tap hole
- with overflow
- without shelf
- without waste set
- installation type: built-in

550/400



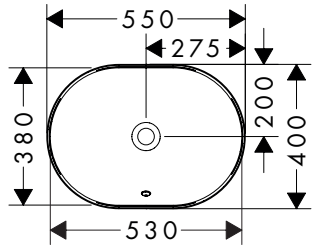

Technologies

Smart Clean

Overview variants

SmartClean	Overflow	Finish	Code no.
–	■	White	60157450

Measurements within scale drawings are in mm.
Technical specifications and units of measure are subject to change.

Xuniva U Above counter basins

Overview variants

SmartClean	Overflow	Finish	Code no.
■	■	White	61062450

Optional parts:		Finish	Code no.
	Design trap Flowstar	Chrome	52100000
	Design trap Flowstar S	Chrome	52105000
		Brushed Bronze	52105140
		Brushed Black Chrome	52105340
		Matt Black	52105670
		Matt White	52105700
		Polished Gold Optic	52105990
	Pipe trap easy to install	Chrome	53010000

Xuniva U Above counter basins

Features of all variants

- material: ceramic
- basin inner height: 130 mm
- degree of gloss ceramic: glossy
- with one tap hole
- with overflow
- without shelf
- without waste set
- installation type: built-in

550/450



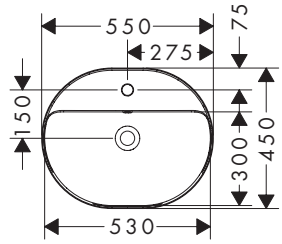

Technologies

Smart Clean

Overview variants

SmartClean	Overflow	Finish	Code no.
–	■	White	60161450
■	■	White	61064450

Optional parts:		Finish	Code no.
	Design trap Flowstar	Chrome	52100000
	Design trap Flowstar S	Chrome	52105000
		Brushed Bronze	52105140
		Brushed Black Chrome	52105340
		Matt Black	52105670
		Matt White	52105700
		Polished Gold Optic	52105990
	Pipe trap easy to install	Chrome	53010000

Measurements within scale drawings are in mm.
Technical specifications and units of measure are subject to change.

Xuniva U Undercounter basins

Features of all variants

- material: ceramic
- basin inner height: 130 mm
- degree of gloss ceramic: glossy
- without tap hole
- with overflow
- without shelf
- without waste set
- installation type: undercounter
- with mounting material

450/350



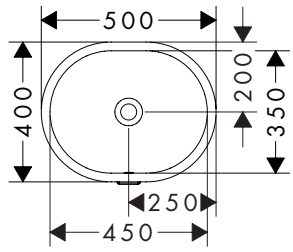

Technologies

Smart Clean

Overview variants

SmartClean	Overflow	Finish	Code no.
–	■	White	60153450
■	■	White	61050450

Optional parts:		Finish	Code no.
	Design trap Flowstar	Chrome	52100000
	Design trap Flowstar S	Chrome	52105000
		Brushed Bronze	52105140
		Brushed Black Chrome	52105340
		Matt Black	52105670
		Matt White	52105700
		Polished Gold Optic	52105990
	Pipe trap easy to install	Chrome	53010000

Measurements within scale drawings are in mm.
Technical specifications and units of measure are subject to change.

Kitchen sinks

	S71	
		
Finish		
Cabinet size (cm)	60/80	90
Tap hole	■	–
Waste set	–	–
Top mounted	■	–
Flush mounted	■	–
Under mounted	–	■
from page	636	637

	S51	
		
Finish		
Cabinet size (cm)	60/80	80/90
Tap hole	–	–
Waste set	–	–
Top mounted	–	–
Flush mounted	–	–
Under mounted	■	■
from page	644	645

■ available depending on the model
– not available

	S43		
			
Finish			
Cabinet size (cm)	60	60 - 90	60/80
Tap hole	–	■	–
Waste set	■	■	■
Top mounted	■	■	–
Flush mounted	–	–	–
Under mounted	–	–	■
from page	640	640	641

Kitchen mixers

	Aquno Select M81	
		
Finish		
ComfortZone	170	250
CoolStart	–	–
EcoSmart	–	–
EcoSelection	–	–
Number of sprays	3	2
Select	■	■
Pull out	■	■
sBox	■	■
sBox lite	–	–
For open water heaters	–	–
Installation in front of window	–	–
Device shutt-off valve	–	–
Drinking water systems	–	–
from page	654	655

	Talis Select M51		Talis M51	
				
Finish				
ComfortZone	220/300	300	160/200	220/260
CoolStart	–	–	–	–
EcoSmart	■	■	■	■
EcoSelection	–	–	–	–
Number of sprays	1/2	1	2	1
Select	■	■	–	–
Pull out	■	–	■	–
sBox	■	–	■	–
sBox lite	–	–	–	–
For open water heaters	–	–	–	■
Installation in front of window	–	–	–	–
Device shutt-off valve	–	–	–	–
Drinking water systems	–	–	–	–
from page	666	667	668	669

■ available depending on the model
– not available

	Metris Select M71		Metris M71	
				
Finish				
ComfortZone	200	240/320	220/320	320
CoolStart	–	–	–	–
EcoSmart	■	■	■	■
EcoSelection	–	–	–	–
Number of sprays	1/2	1/2	2	1
Select	■	■	–	–
Pull out	■	■	■	■
sBox	■	■	■	■
sBox lite	–	–	–	–
For open water heaters	–	–	–	–
Installation in front of window	–	–	–	■
Device shutt-off valve	–	–	–	–
Drinking water systems	–	–	–	–
from page	658	659	640	662

	Talis M52	Talis M54			Cento
					
Finish					
ComfortZone	170	210/220	220	270	190
CoolStart	–	–	–	–	–
EcoSmart	–	■	■	■	–
EcoSelection	–	–	–	–	■
Number of sprays	2	1/2	1	1	2
Select	–	–	–	–	–
Pull out	■	■	–	■	–
sBox	–	■	–	■	–
sBox lite	–	–	–	–	–
For open water heaters	–	–	–	–	–
Installation in front of window	–	–	–	–	–
Device shutt-off valve	–	–	–	–	–
Drinking water systems	–	–	–	–	–
from page	670	671	673	674	678

Kitchen mixers

	Focus M41				
					
Finish					
ComfortZone	240	260/280	260	160	–
CoolStart	–	–	–	■	–
EcoSmart	■	■	■	■	–
EcoSelection	–	–	–	■	–
Number of sprays	2	1	1	1	1
Select	–	–	–	–	–
Pull out	■	–	–	–	–
sBox	■	–	–	–	–
sBox lite	–	–	–	–	–
For open water heaters	–	■	–	■	–
Installation in front of window	–	–	–	–	–
Device shutt-off valve	–	–	–	–	–
Drinking water systems	–	–	–	–	–
from page	680	680	681	682	684

	Logis M31		
			
Finish			
ComfortZone	260	120/160	–
CoolStart	–	■	–
EcoSmart	■	–	–
EcoSelection	–	■	–
Number of sprays	1	1	1
Select	–	–	–
Pull out	–	–	–
sBox	–	–	–
sBox lite	–	–	–
For open water heaters	–	■	–
Installation in front of window	–	■	–
Device shutt-off valve	–	–	–
Drinking water systems	–	–	–
from page	696	696	698

■ available depending on the model
– not available

	Focus M42			Zesis M33
				
Finish				
ComfortZone	180/220	100/120	150	150/160
CoolStart	–	■	–	■
EcoSmart	■	■	■	■
EcoSelection	–	■	–	■
Number of sprays	1/2	1	1	1/2
Select	–	–	–	–
Pull out	■	–	■	■
sBox	■	–	■	■
sBox lite	–	–	–	■
For open water heaters	–	■	–	–
Installation in front of window	–	■	–	■
Device shutt-off valve	–	–	–	–
Drinking water systems	–	–	–	–
from page	685	686	688	690

	Logis M32	Vernis Blend M35	Vernis Shape M35
			
Finish			
ComfortZone	–	210	210
CoolStart	–	–	–
EcoSmart	–	–	–
EcoSelection	–	–	–
Number of sprays	1	1	1
Select	–	–	–
Pull out	–	–	–
sBox	–	–	–
sBox lite	–	–	–
For open water heaters	–	–	–
Installation in front of window	–	–	–
Device shutt-off valve	–	–	–
Drinking water systems	–	–	–
from page	699	702	703

Highlights

Installation



The sink is installed flush with the worktop to create a smooth transition between worktop and sink.



The sink is inserted from above into a cut-out in the worktop.



The sink is mounted below the cut-out. It is therefore almost invisible, making the kitchen look more spacious.

Sustainability



Energy saving tap that supports conserving precious resources, reducing CO2 emissions and cutting costs.



The special Eco cartridge indicates with a slight resistance when 50% of the flow rate has been reached.



Tap that uses just 6 l/min and thus reduces water and energy costs. Good for the environment and your wallet.

Technologies



Mixes air into the water. For a soft, less splashing water jet and full, light drops.



Ensures maximum room to move at the sink, both in terms of height and the ability to swivel from side to side.



Low-pressure technology enables use at pressures as low as 0.2 bar. Suitable for boilers/heat exchangers.



A pull-out spray or spout enormously expands our the operating radius at the sink.



Limescale deposits and dirt can be simply rubbed off using a finger, creating less of a need to clean.



Start the water, stop the water: One push of a button is all it takes to control the water flow at the sink.



Sink in front of the window? This kitchen tap can be easily removed from its holder and placed on its side.



Smooth, silent and protected hose guidance. The pull-out spray can be extended to max. 76 cm.



The compact solution for smooth and safe hose handling. Suitable for any kitchen base unit.

Spray types



Crystal-clear spray for the sink with no air mixed in, perfect for quickly filling vessels.



Full spray enriched with air that feels lovely and helps with all sink-based routines.



Flat, super-soft spray that does not splash, is highly efficient and conserves resources.



Resource-conserving and efficient kitchen spray that can also be used to quickly rinse food.

Finishes


Brushed Black Chrome


Chrome

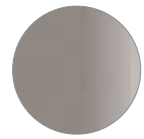
Concretegrey


Dark Walnut


Graphiteblack


Matt Black


Natural Oak

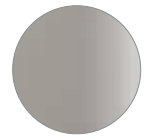
Stainless Steel

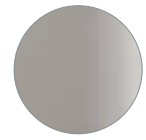
Stainless Steel Finish

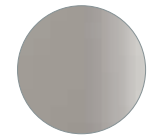
Stainless Steel Optic


Stonegrey



S71

S71 Built-in sinks Stainless Steel

Features of all variants

- material: stainless steel
- number of bowls: 1 main bowl
- predrilled tap hole
- installation type: flat on the countertop (self-rimming) or flush-mount installation
- position overflow: on the right side of the bowl
- tap ledge reinforcing for a tight and stable seating of the kitchen mixer
- corner radius: 10 mm
- sink depth: 190 mm

450



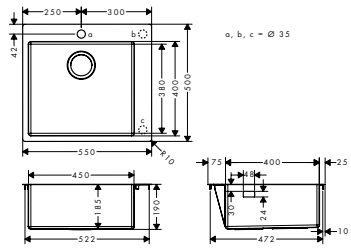

660



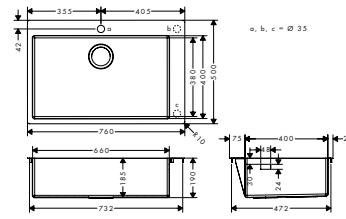

Installation

Top Mounted Installation | Flush Mounted Installation

Overview variants

Cabinet size (cm)	Cut-out dimensions (mm)	Finish	Code no.
60	530 x 480 mm	Stainless Steel	43301809
80	740 x 480 mm	Stainless Steel	43302809

Required parts (choose one):	For	Finish	Code no.
D11-10 Manual waste and overflow set for sink 400/450	43301SGP	Chrome	43920009
D11-11 Automatic waste and overflow set for sink 400/450	43301SGP	Chrome	43930009

S71 Built-in sinks Stainless Steel

Features of all variants

- cut-out dimensions: 845 x 480 mm
- material: stainless steel
- predrilled tap hole
- cabinet size: 90 cm
- installation type: flat on the countertop (self-rimming) or flush-mount installation
- tap ledge reinforcing for a tight and stable seating of the kitchen mixer
- corner radius: 10 mm
- sink depth: 190 mm

370/370



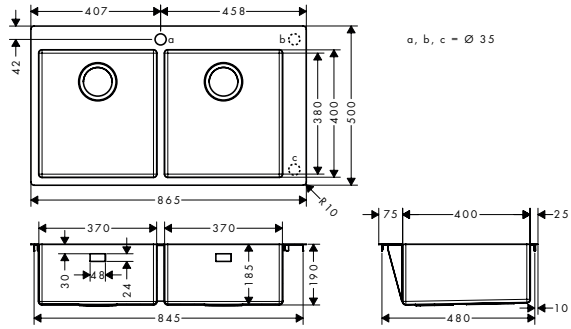

Installation

Top Mounted Installation | Flush Mounted Installation

Overview variants

Cabinet size (cm)	Cut-out dimensions (mm)	Finish	Code no.
90	845 x 480 mm	Stainless Steel	43304809
90	845 x 480 mm	Stainless Steel	43303809

Required parts (choose one):	For	Finish	Code no.
D18-10 Manual waste and overflow set for sink 305/435	43304SGP	Chrome	43923009
D18-11 Automatic waste and overflow set for sink 305/435	43304SGP	Chrome	43933009

Measurements within scale drawings are in mm.
Technical specifications and units of measure are subject to change.

S71 Built-in sinks Stainless Steel

Required parts (choose one):		For	Finish	Code no.
	D15-10 Manual waste and overflow set for double bowl	43303SGP	Stainless Steel	43922800

S71 Undermount sinks Stainless Steel

Features of all variants

- material: stainless steel
- number of bowls: 1 main bowl
- installation type: undercounter
- position overflow: on the right side of the bowl
- corner radius: 10 mm
- sink depth: 190 mm

450



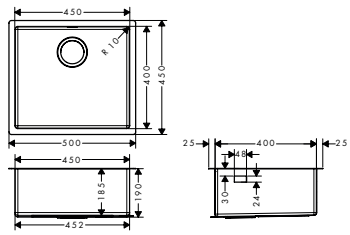

660



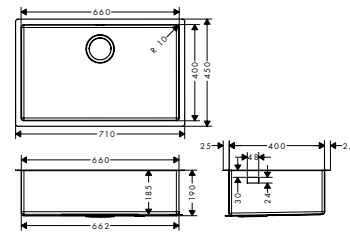

Installation

Under Mounted Installation

Overview variants

Cabinet size (cm)	Number of bowls	Finish	Code no.
60	1	Stainless Steel	43426809
80		Stainless Steel	43428809

Required parts (choose one):		For	Finish	Code no.
	D11-10 Manual waste and overflow set for sink 400/450	43426SGP	Chrome	43920009
	D11-11 Automatic waste and overflow set for sink 400/450	43426SGP	Chrome	43930009

S71 Undermount sinks Stainless Steel

Features of all variants

- material: stainless steel
- number of bowls: 2 main bowls
- cabinet size: 90 cm
- installation type: undercounter
- sink depth: 190 mm

305/435



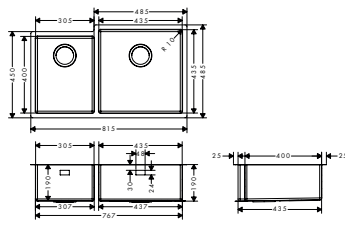

370/370



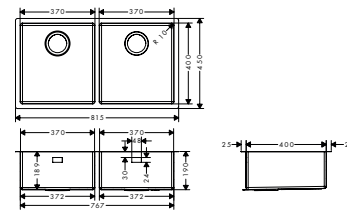

Installation

Under Mounted Installation

Overview variants

Cabinet size (cm)	Number of bowls	Finish	Code no.
90		Stainless Steel	43435809

For more information about this product, please see the next page.

Measurements within scale drawings are in mm.
Technical specifications and units of measure are subject to change.

S71 Undermount sinks Stainless Steel

Overview variants

Cabinet size (cm)	Number of bowls	Finish	Code no.
90	2	Stainless Steel	43430809

Required parts (choose one):	For	Finish	Code no.
 D18-11 Automatic waste and overflow set for sink 305/435	43435SGP	Chrome	43933009
 D18-10 Manual waste and overflow set for sink 305/435	43435SGP	Chrome	43923009
 D15-10 Manual waste and overflow set for double bowl	43430SGP	Stainless Steel	43922800

Measurements within scale drawings are in mm.
Technical specifications and units of measure are subject to change.



S43

S43 S430-F400 Built-in sink 400 incl. manual drain kit

Features

- consists of: built-in sink, manual waste set with siphon
- cut-out dimensions: 370 x 370 mm
- material: stainless steel
- number of bowls: 1 main bowl
- cabinet size: 60 cm
- installation type: topmount
- position overflow: on the front centered in the bowl
- packaging: singlepackaging
- corner radius: 180 mm
- sink depth: 178 mm



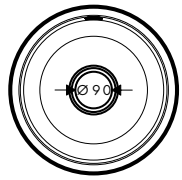

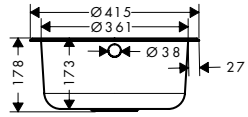

Installation



Finish	Code no.
Stainless Steel	43343807

S43 Built-in sinks Stainless Steel

Features of all variants

- consists of: built-in sink, manual waste set with siphon
- material: stainless steel
- tap hole and hole for pop-up waste control are pre-drilled
- installation type: topmount
- packaging: singlepackaging
- corner radius: 15 mm
- sink depth: 205 mm

456



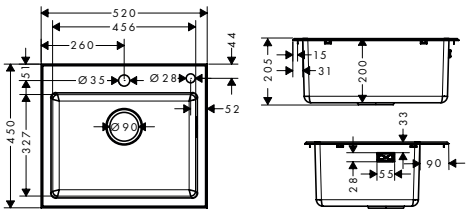

408/288



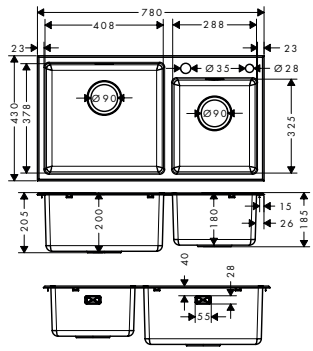

408/341



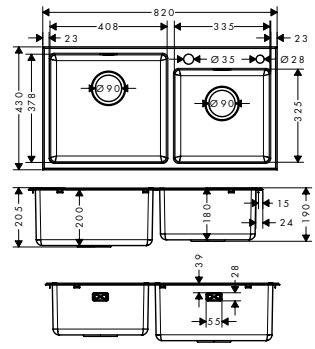

Installation



Overview variants

Cabinet size (cm)	Cut-out dimensions (mm)	Number of bowls	Finish	Code no.
60	503 x 433 mm	1	Stainless Steel	43344807
80	763 x 413 mm	2	Stainless Steel	43345807
90	803 x 413 mm	2	Stainless Steel	43346807

Measurements within scale drawings are in mm.
Technical specifications and units of measure are subject to change.

S43 Built-in sinks Stainless Steel

Features of all variants

- consists of: built-in sink, manual waste set with siphon
- material: stainless steel
- predrilled tap hole
- installation type: topmount
- packaging: singlepackaging
- corner radius: 15 mm
- sink depth: 205 mm

452



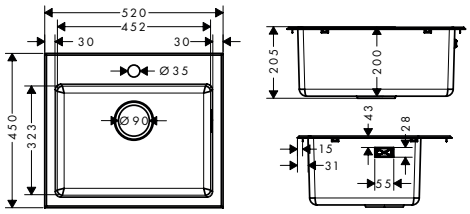

408/288



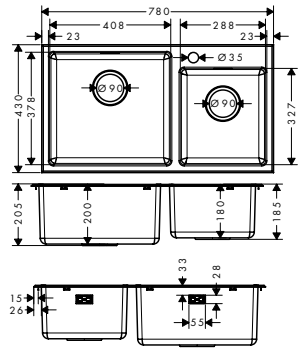

408/333



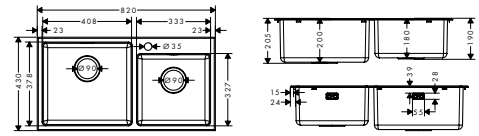

Installation

Top Mounted Installation

Overview variants

Cabinet size (cm)	Cut-out dimensions (mm)	Number of bowls	Finish	Code no.
60	503 x 433 mm	1	Stainless Steel	43353807
80	763 x 413 mm	2	Stainless Steel	43354807
90	803 x 413 mm	2	Stainless Steel	43355807

S43 Undermount sinks Stainless Steel

Features of all variants

- consists of: built-in sink, manual waste set with siphon
- material: stainless steel
- number of bowls: 1 main bowl
- without tap hole
- installation type: undercounter
- position overflow: on the right side of the bowl
- packaging: singlepackaging

402



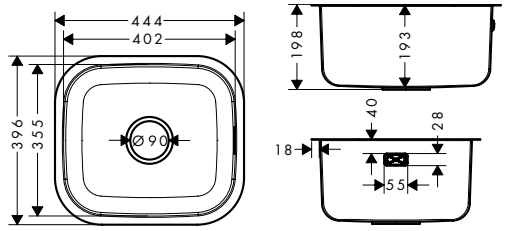

Installation

Under Mounted Installation

Overview variants

Cabinet size (cm)	Cut-out dimensions (mm)	Number of bowls	Finish	Code no.
60	408 x 360 mm	1	Stainless Steel	43453807
80	727 x 372 mm	1	Stainless Steel	43454807

Measurements within scale drawings are in mm.
Technical specifications and units of measure are subject to change.



S51

S51 Undermount sinks SilicaTec

Features of all variants

- material: SilicaTec
- number of bowls: 1 main bowl
- without tap hole
- installation type: undercounter
- position overflow: on the right side of the bowl
- sink depth: 190 mm
- waste set not included - please order one waste set from the required parts

450



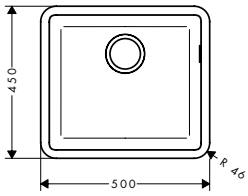

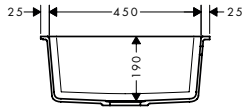

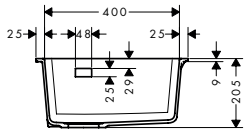

660



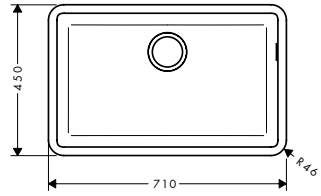

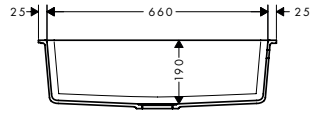

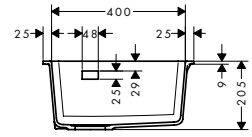

Installation



Overview variants

Cabinet size (cm)	Cut-out dimensions (mm)	Number of bowls	Finish	Code no.
60	448 x 398 mm	1	Graphiteblack	43431170
			Stonegrey	43431290
			Concretegrey	43431380
80	658 x 398 mm	1	Graphiteblack	43432170
			Stonegrey	43432290
			Concretegrey	43432380

Required parts (choose one):	Finish	Code no.
 D16-10 Manual waste and overflow set for single bowl granite	Chrome	43927000
 D16-11 Automatic waste and overflow set for single bowl granite	Chrome	43937000

Measurements within scale drawings are in mm.
Technical specifications and units of measure are subject to change.

S51 Undermount sinks SilicaTec

Features of all variants

- material: SilicaTec
- without tap hole
- installation type: undercounter
- sink depth: 190 mm
- waste set not included - please order one waste set from the required parts

180/450



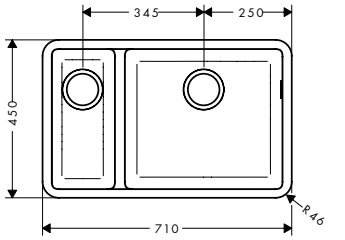

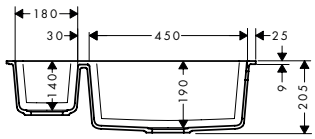

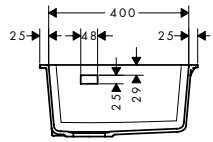

370/370



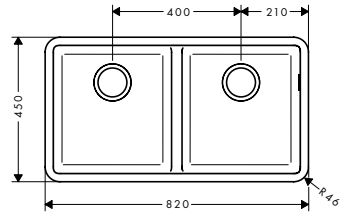

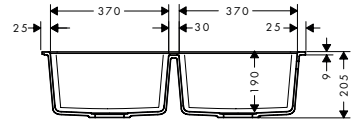

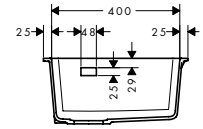

Installation



Overview variants

Cabinet size (cm)	Cut-out dimensions (mm)	Number of bowls	Finish	Code no.
80	658 x 398 mm	2	Graphiteblack	43433170
			Stonegrey	43433290
			Concretegrey	43433380
90	768 x 398 mm	2	Graphiteblack	43434170
			Stonegrey	43434290
			Concretegrey	43434380

Required parts (choose one):		Finish	Code no.
	D17-10 Manual waste and overflow set for double bowl granite	Chrome	43928000
	D17-11 Automatic waste and overflow set for double bowl granite	Chrome	43938000

Measurements within scale drawings are in mm.
Technical specifications and units of measure are subject to change.

D19-10 manual waste and overflow set for single bowl and dishwasher drains

Features

- consists of: waste and overflow set, screen basket, trap
- drain system: drain operation of main bowl and additional bowl via pushing/pulling screen basket
- 1 1/2" with space-saving drain pipe and odor trap
- screen basket: 3 1/2"



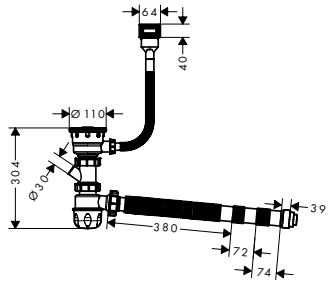

Finish	Code no.
Stainless Steel	43961807

D20-10 manual waste and overflow set for double bowl and dishwasher drains

Features

- consists of: waste and overflow set, screen basket, trap
- drain system: drain operation of main bowl and additional bowl via pushing/pulling screen basket
- 1 1/2" with space-saving drain pipe and odor trap
- screen basket: 3 1/2"



Finish	Code no.
Stainless Steel	43962807

D16-10 Manual waste and overflow set for single bowl granite

Features

- consists of: waste and overflow set, screen basket, trap
- drain system: drain operation via pushing/pulling screen basket
- diameter 40 / 50
- 1 1/2" with space-saving drain pipe and odor trap
- screen basket: 3 1/2"



Finish	Code no.
Chrome	43927000

Measurements within scale drawings are in mm.
Technical specifications and units of measure are subject to change.

D18-10 Manual waste and overflow set for sink 305/435

Features

- consists of: waste and overflow set, screen basket, trap
- drain system: drain operation of main bowl and additional bowl via pushing/pulling screen basket
- diameter 40 / 50
- 1 1/2" with space-saving drain pipe and odor trap
- screen basket: 3 1/2"



Finish	Code no.
Chrome	43923009

Manual waste and overflow sets for double bowls

Features of all variants

- consists of: waste and overflow set, screen basket, trap
- drain system: drain operation of main bowl and additional bowl via pushing/pulling screen basket
- diameter 40 / 50
- 1 1/2" with space-saving drain pipe and odor trap
- screen basket: 3 1/2"

D15-10



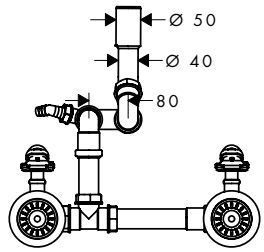

D17-10



Overview variants

Version	Finish	Code no.
for stainless steel sinks	Stainless Steel	43922800
for granite sinks	Chrome	43928000
for stainless steel sinks	Chrome	43922009

Measurements within scale drawings are in mm.
Technical specifications and units of measure are subject to change.

D11-10 Manual waste and overflow set for sink 400/450

Features

- consists of: waste and overflow set, screen basket, trap
- drain system: drain operation via pushing/pulling screen basket
- diameter 40 / 50
- 1 1/2" with space-saving drain pipe and odor trap
- screen basket: 3 1/2"



Finish	Code no.
Chrome	43920009

D14-10 Manual waste and overflow set for sink 660

Features

- consists of: waste and overflow set, screen basket, trap
- drain system: drain operation via pushing/pulling screen basket
- 1 1/2" with space-saving drain pipe and odor trap
- screen basket: 3 1/2"



Finish	Code no.
Chrome	43921009

D16-11 Automatic waste and overflow set for single bowl granite

Features

- consists of: waste and overflow set, pop-up waste set, trap
- drain system: drain operation via turning pop-up handle
- diameter 40 / 50
- 1 1/2" with space-saving drain pipe and odor trap
- screen basket: 3 1/2"



Finish	Code no.
Chrome	43937000

Optional parts:		Finish	Code no.
	A11 turning handle for eccentric operation	Matt Black	40953670
		Stainless Steel Finish	40953800

D17-11 Automatic waste and overflow set for double bowl granite

Features

- consists of: waste and overflow set, pop-up waste set, trap
- drain system: drain operation of main bowl via turning pop-up handle and additional bowl via pushing/pulling screen basket
- diameter 40 / 50
- 1 1/2" with space-saving drain pipe and odor trap
- screen basket: 3 1/2"



Finish	Code no.
Chrome	43938000

Optional parts:

		Finish	Code no.
	A11 turning handle for eccentric operation	Matt Black	40953670
		Stainless Steel Finish	40953800

D18-11 Automatic waste and overflow set for sink 305/435

Features

- consists of: waste and overflow set, pop-up waste set, trap
- drain system: drain operation of main bowl via turning pop-up handle and additional bowl via pushing/pulling screen basket
- diameter 40 / 50
- 1 1/2" with space-saving drain pipe and odor trap
- screen basket: 3 1/2"



Finish	Code no.
Chrome	43933009

D15-11 Automatic waste and overflow set for sink 370/370

Features

- consists of: waste and overflow set, pop-up waste set, trap
- drain system: drain operation of main bowl via turning pop-up handle and additional bowl via pushing/pulling screen basket
- diameter 40 / 50
- 1 1/2" with space-saving drain pipe and odor trap
- screen basket: 3 1/2"



Finish	Code no.
Chrome	43932009

D11-11 Automatic waste and overflow set for sink 400/450

Features

- consists of: waste and overflow set, pop-up waste set, trap
- drain system: drain operation via turning pop-up handle
- diameter 40 / 50
- 1 1/2" with space-saving drain pipe and odor trap
- screen basket: 3 1/2"



Finish	Code no.
Chrome	43930009

D14-11 Automatic waste and overflow set for sink 660

Features

- consists of: waste and overflow set, pop-up waste set, trap
- drain system: drain operation via turning pop-up handle
- diameter 40 / 50
- 1 1/2" with space-saving drain pipe and odor trap
- screen basket: 3 1/2"



Finish	Code no.
Chrome	43931009

D18-12 Automatic waste and overflow set for sink 305/435 Select

Features

- consists of: waste and overflow set, pop-up waste set, trap
- drain system: drain operation of main bowl via turning pop-up handle and additional bowl via pushing/pulling screen basket
- diameter 40 / 50
- 1 1/2" with space-saving drain pipe and odor trap
- screen basket: 3 1/2"



Finish	Code no.
Chrome	43943009

Measurements within scale drawings are in mm.
Technical specifications and units of measure are subject to change.

D15-12 Automatic waste and overflow set for sink 370/370 Select

Features

- consists of: waste and overflow set, pop-up waste set, trap
- drain system: drain operation of main bowl via turning pop-up handle and additional bowl via pushing/pulling screen basket
- diameter 40 / 50
- 1 1/2" with space-saving drain pipe and odor trap
- screen basket: 3 1/2"



Finish	Code no.
Chrome	43942009

D11-12 Automatic waste and overflow set for sink 400/450 Select

Features

- consists of: waste and overflow set, pop-up waste set, trap
- drain system: drain operation via turning pop-up handle
- diameter 40 / 50
- 1 1/2" with space-saving drain pipe and odor trap
- screen basket: 3 1/2"



Finish	Code no.
Chrome	43940009

D14-12 Automatic waste and overflow set for sink 660 Select

Features

- consists of: waste and overflow set, pop-up waste set, trap
- drain system: drain operation via turning pop-up handle
- diameter 40 / 50
- 1 1/2" with space-saving drain pipe and odor trap
- screen basket: 3 1/2"



Finish	Code no.
Chrome	43941009

A10 drain cover

Features

· suitable for stainless steel sinks with 3 ½" basket strainer
· material: plastic



Finish	Code no.
Stainless Steel Finish	40952800

A11 turning handle for eccentric operation

Features

· material: metal



Finish	Code no.
Matt Black	40953670
Stainless Steel Finish	40953800

Measurements within scale drawings are in mm.
Technical specifications and units of measure are subject to change.



Aquno Select M81

Aquno Select M81 Single lever kitchen mixers, pull-out spray, 3jet

Features of all variants

- ComfortZone 170
- swivel range adjustable in 3 steps 60°, 110° or 150°
- laminar spray, shower spray, SatinFlow
- change between SatinFlow and pull-out spray at the touch of a button
- lockable shower spray, spray returns through pressing spray diverter
- MagFit magnetic shower support
- connection dimension: DN15
- ceramic cartridge
- connection type: G ⅜ connections
- integrated non-return valve
- not suitable for continuous flow water heaters
- tap hole with Ø 35 mm required, recommendation: the middle of tap hole drilling should be max. 50 mm from the back side of of the bowl



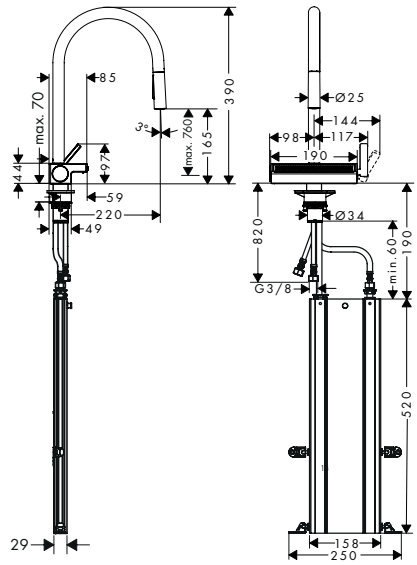

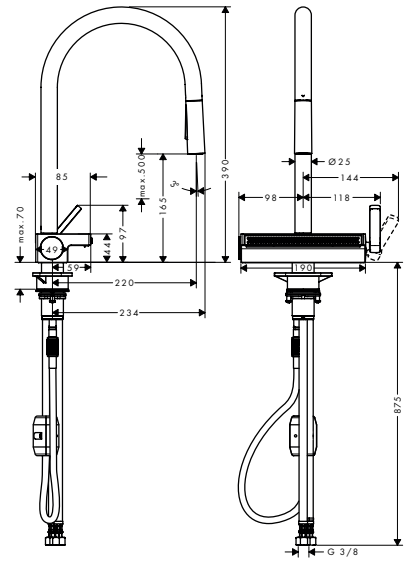

Technologies



Spray types



Overview variants

ComfortZone	Hose retraction	Extension length (cm)	Max. flow rate at 3 bar (l/min)	Finish	Code no.
170	sBox	up to 76 cm	6	Chrome	73831000
				Matt Black	73831670
				Stainless Steel Finish	73831800
170	weight	up to 50 cm	7	Chrome	73837000
				Matt Black	73837670
				Stainless Steel Finish	73837800

Consisting of:		Included in	Code no.
	F14 Multifunctional strainer	73831XXX 73837XXX	40963000

Measurements within scale drawings are in mm.
Technical specifications and units of measure are subject to change.

Aquno Select M81 Single lever kitchen mixers, pull-out spout, 2jet

Features of all variants

- ComfortZone 250
- l-spout
- swivel range adjustable in 3 steps 60°, 110° or 150°
- laminar spray, SatinFlow
- change between SatinFlow and pull-out spout at the touch of a button
- MagFit magnetic shower support
- connection dimension: DN15
- ceramic cartridge
- connection type: G ⅜ connections
- integrated non-return valve
- not suitable for continuous flow water heaters
- tap hole with Ø 35 mm required, recommendation: the middle of tap hole drilling should be max. 50 mm from the back side of of the bowl



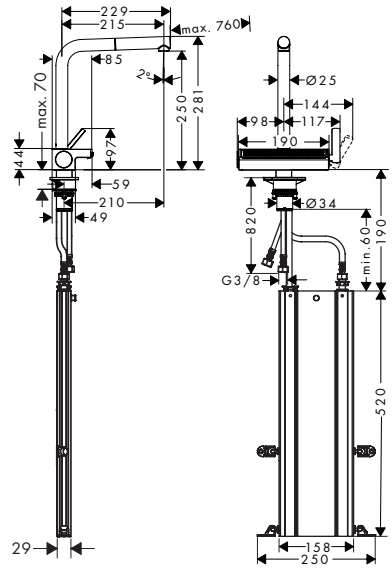

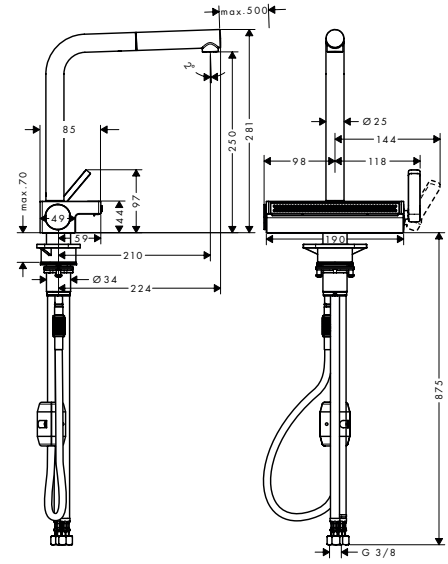

Technologies



Spray types



Overview variants

ComfortZone	Hose retraction	Extension length (cm)	Max. flow rate at 3 bar (l/min)	Finish	Code no.
250	sBox	up to 76 cm	6	Chrome	73830000
				Matt Black	73830670
				Stainless Steel Finish	73830800
250	weight	up to 50 cm	7	Chrome	73836000
				Matt Black	73836670
				Stainless Steel Finish	73836800

Consisting of:		Included in	Code no.
	F14 Multifunctional strainer	73830XXX 73836XXX	40963000

Measurements within scale drawings are in mm.
Technical specifications and units of measure are subject to change.



Metris M71

Metris Select M71 2-hole single lever kitchen mixers, pull-out spray, 2jet

Features of all variants

- ComfortZone 200
- swivel range adjustable in 2 steps to 110° or 150°
- flexible position of faucet controls, 2 tap holes with Ø 35 mm required
- laminar spray, shower spray
- lockable shower spray, spray returns through pressing spray diverter and spray returns automatically through handle closing
- Select button for a comfortable start/stop of the water flow
- MagFit magnetic shower support
- connection dimension: DN15
- ceramic cartridge
- connection type: G ⅜ connections
- integrated non-return valve
- suitable for continuous flow water heaters



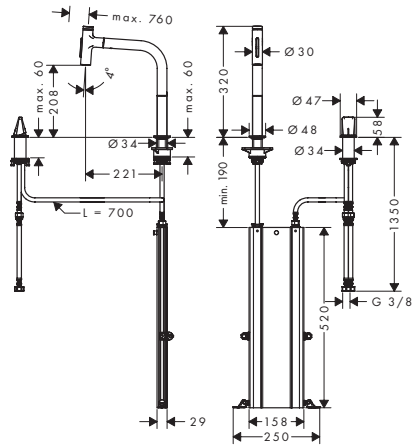

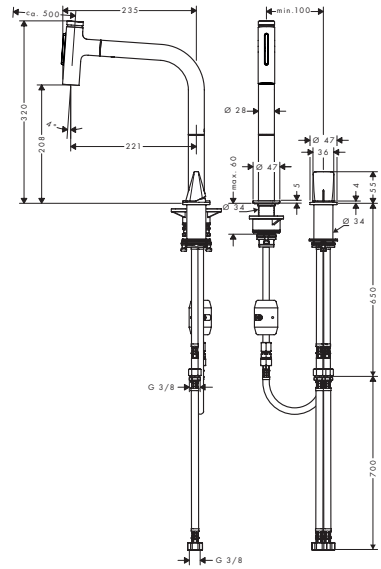

Technologies

Select | Pull-out | Comfort Zone | sBox Kitchen | Quick Clean

Spray types

Laminar Spray | Shower Spray

Overview variants

ComfortZone	Hose retraction	Extension length (cm)	Max. flow rate at 3 bar (l/min)	Finish	Code no.
200	sBox	up to 76 cm	8	Chrome	73818000
				Brushed Black Chrome	73818340
				Matt Black	73818670
200	weight	up to 50 cm	7	Chrome	73819000
				Stainless Steel Finish	73819800

Metris Select M71 2-hole singel lever kitchen mixers, pull-out spout, 1jet

Features of all variants

- consists of: 2-hole single lever kitchen mixer, control unit, hose box
- ComfortZone 200
- swivel range adjustable in 2 steps to 110° or 150°
- flexible position of faucet controls, 2 tap holes with Ø 35 mm required
- normal spray
- Select button for a comfortable start/stop of the water flow
- MagFit magnetic shower support
- connection dimension: DN15
- ceramic cartridge
- connection type: G ⅜ connections
- integrated non-return valve
- suitable for continuous flow water heaters
- sBox for quiet, smooth and protected hose guidance in the cabinet, under the countertop
- extension length up to 76 cm



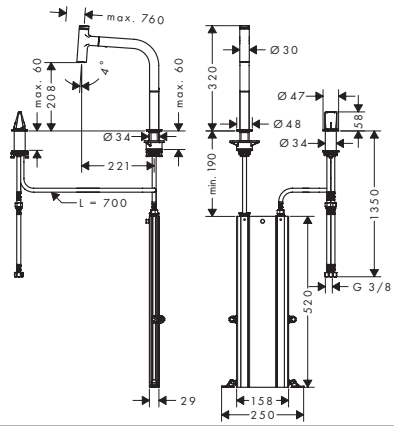

Sustainability

EcoSmart

Technologies

Select | Pull-out | AirPower | Comfort Zone | sBox Kitchen | Quick Clean

Spray types

Normal Spray

Measurements within scale drawings are in mm.
Technical specifications and units of measure are subject to change.

Metris Select M71 2-hole singel lever kitchen mixers, pull-out spout, 1jet

Overview variants

ComfortZone	EcoSmart	Max. flow rate at 3 bar (l/min)	Finish	Code no.
200	–	8	Chrome	73804000
			Stainless Steel Finish	73804800
200	■	4.3	Chrome	73825000

Metris Select M71 Single lever kitchen mixers, pull-out spray, 2jet

Features of all variants

- swivel range adjustable in 2 steps to 110° or 150°
- laminar spray, shower spray
- lockable shower spray, spray returns through pressing spray diverter and spray returns automatically through handle closing
- Select button for a comfortable start/stop of the water flow
- MagFit magnetic shower support
- connection dimension: DN15
- ceramic cartridge
- connection type: G ⅜ connections
- temperature limitation adjustable
- integrated non-return valve
- suitable for continuous flow water heaters

240



320



Technologies

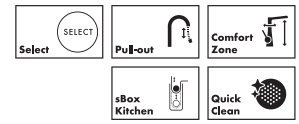

Spray types



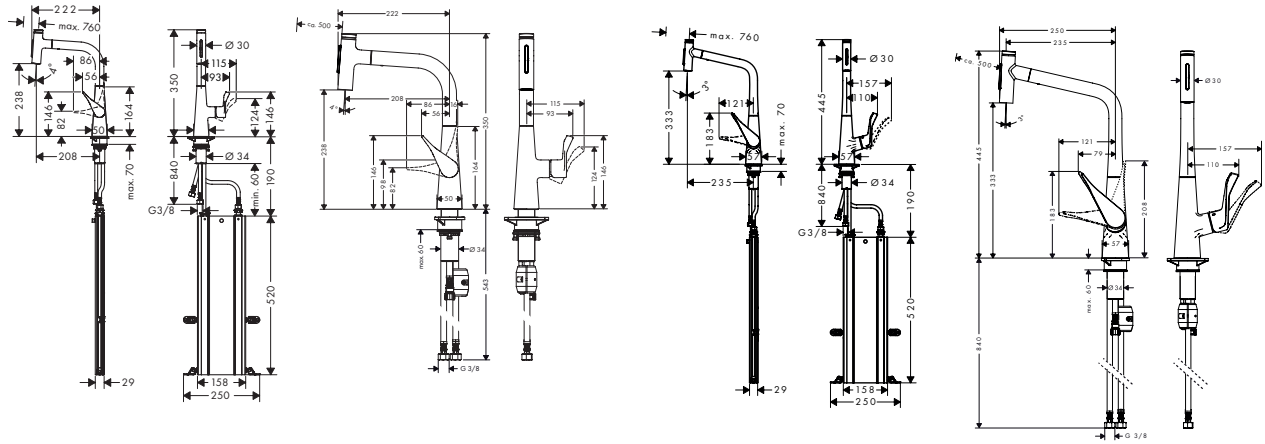

Overview variants

ComfortZone	Hose retraction	Extension length (cm)	Max. flow rate at 3 bar (l/min)	Finish	Code no.
240	sBox	up to 76 cm	7	Chrome	73817000
				Stainless Steel Finish	73817800
240	weight	up to 50 cm	7	Chrome	73822000
				Stainless Steel Finish	73822800
320	sBox	up to 76 cm	8	Chrome	73816000
				Stainless Steel Finish	73816800
320	weight	up to 50 cm	8	Chrome	73820000
				Stainless Steel Finish	73820800

Measurements within scale drawings are in mm.
Technical specifications and units of measure are subject to change.

Metris Select M71 Single lever kitchen mixers, pull-out spout, 1jet

Features of all variants

- swivel range adjustable in 2 steps to 110° or 150°
- laminar spray
- Select button for a comfortable start/stop of the water flow
- MagFit magnetic shower support
- connection dimension: DN15
- ceramic cartridge
- connection type: G ⅜ connections
- temperature limitation adjustable
- integrated non-return valve
- suitable for continuous flow water heaters
- significantly reduced splashing by soft start of the water flow

240



320



Sustainability

EcoSmart

Technologies

Select | Pull-out | Comfort Zone | sBox Kitchen

Spray types

Laminar Spray

Certificates/declarations

EPD

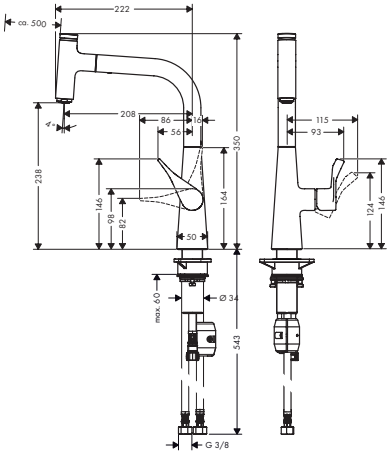

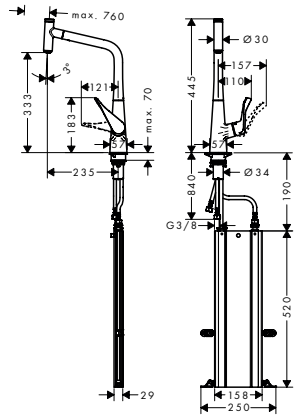

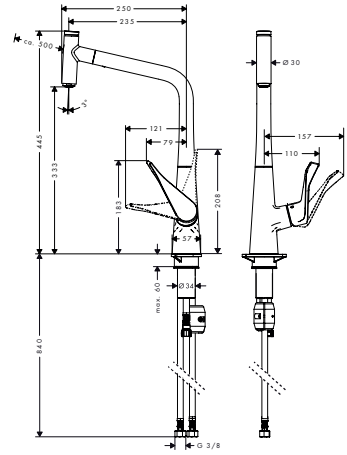

Overview variants

ComfortZone	Hose retraction	Extension length (cm)	EcoSmart	Max. flow rate at 3 bar (l/min)	Finish	Code no.
240	sBox	up to 76 cm	–	7	Chrome	73802000
					Stainless Steel Finish	73802800
240	weight	up to 50 cm	–	8	Chrome	14857000
					Stainless Steel Finish	14857800
320	sBox	up to 76 cm	–	8	Chrome	73803000
320	sBox	up to 76 cm	■	4.4	Chrome	73807000
320	weight	up to 50 cm	–	8	Chrome	14884000
					Stainless Steel Finish	14884800
320	weight	up to 50 cm	■	4.3	Chrome	14786000

Measurements within scale drawings are in mm.
Technical specifications and units of measure are subject to change.

Metris Select M71 Single lever kitchen mixers, 1jet

Features of all variants

- l-spout
- swivel range adjustable in 3 steps 110°, 150° or 360°
- laminar spray
- Select button for a comfortable start/stop of the water flow
- connection dimension: DN15
- ceramic cartridge
- connection type: G ⅜ connections
- temperature limitation adjustable
- integrated non-return valve
- suitable for continuous flow water heaters

260

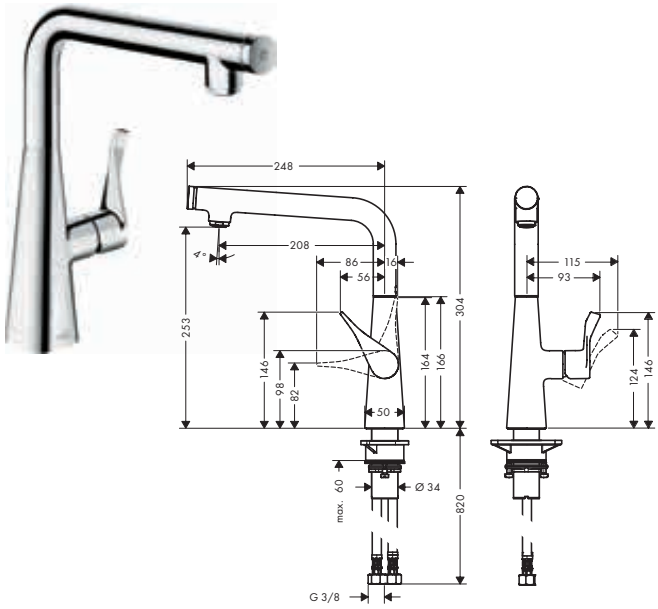

320

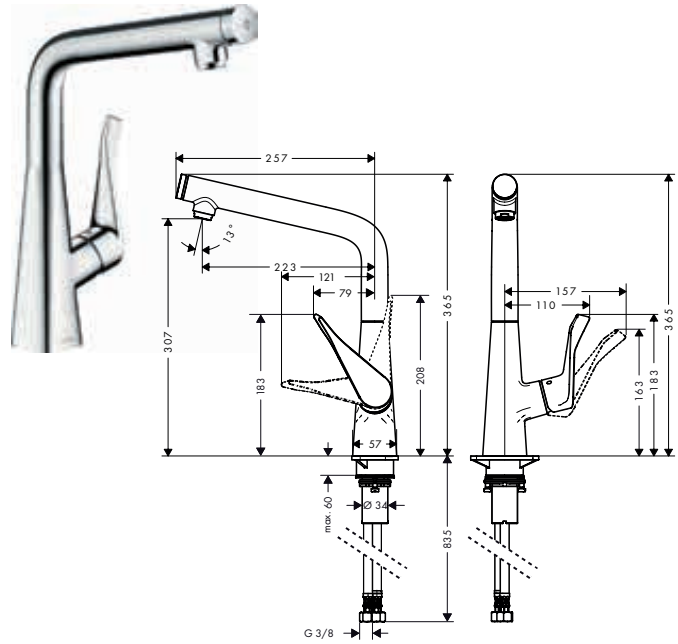

Sustainability

EcoSmart

Technologies

Select (SELECT)

Comfort Zone

Spray types

Laminar Spray

Overview variants

ComfortZone	EcoSmart	Max. flow rate at 3 bar (l/min)	Finish	Code no.
260	–	9	Chrome	14847000
			Stainless Steel Finish	14847800
320	–	8	Chrome	14883000
			Stainless Steel Finish	14883800
320	■	5.7	Chrome	14785000

Measurements within scale drawings are in mm.
Technical specifications and units of measure are subject to change.

Metris M71 Single lever kitchen mixers, pull-out spray, 2jet

Features of all variants

- swivel range adjustable in 2 steps to 110° or 150°
- laminar spray, shower spray
- lockable shower spray, spray returns automatically through handle closing
- MagFit magnetic shower support
- connection dimension: DN15
- ceramic cartridge
- connection type: G ⅜ connections
- temperature limitation adjustable
- integrated non-return valve
- suitable for continuous flow water heaters

220



320



Sustainability

EcoSmart

Technologies

Pull-out | Comfort Zone | sBox Kitchen | Quick Clean

Spray types

Laminar Spray | Shower Spray

Certificates/declarations

EPD

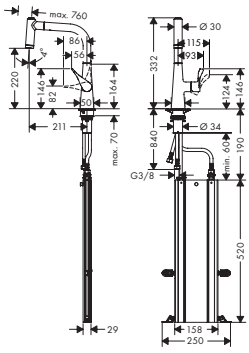

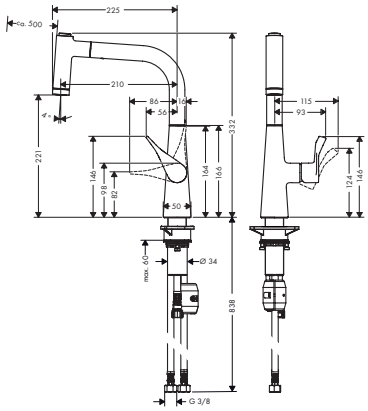

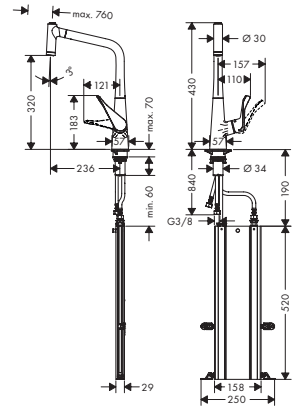

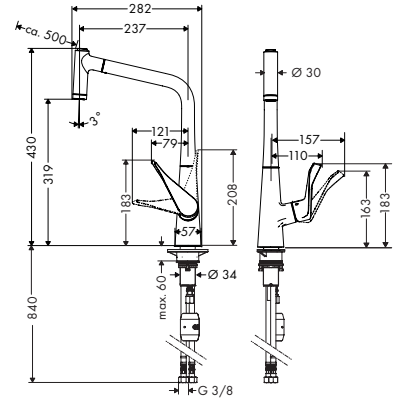

Overview variants

ComfortZone	Hose retraction	Extension length (cm)	EcoSmart	Max. flow rate at 3 bar (l/min)	Finish	Code no.
220	sBox	up to 76 cm	–	9	Chrome	73800000
					Stainless Steel Finish	73800800
220	sBox	up to 76 cm	■	5.4	Chrome	73823000
220	weight	up to 50 cm	–	9	Chrome	14834000
					Stainless Steel Finish	14834800
320	sBox	up to 76 cm	–	10	Chrome	73801000
					Stainless Steel Finish	73801800
320	sBox	up to 76 cm	■	5.2	Chrome	73824000
320	weight	up to 50 cm	–	10	Chrome	14820000
					Stainless Steel Finish	14820800
320	weight	up to 50 cm	■	5.8	Chrome	14780000

Measurements within scale drawings are in mm.
Technical specifications and units of measure are subject to change.

Metris M71 Single lever kitchen mixers, pull-out spout, 1jet

Features of all variants

- ComfortZone 320
- l-spout
- swivel range adjustable in 2 steps to 110° or 150°
- laminar spray
- MagFit magnetic shower support
- connection dimension: DN15
- ceramic cartridge
- connection type: G ⅜ connections
- temperature limitation adjustable
- integrated non-return valve
- suitable for continuous flow water heaters
- significantly reduced splashing by soft start of the water flow



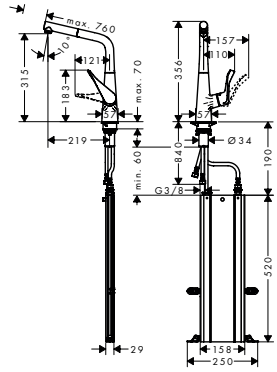

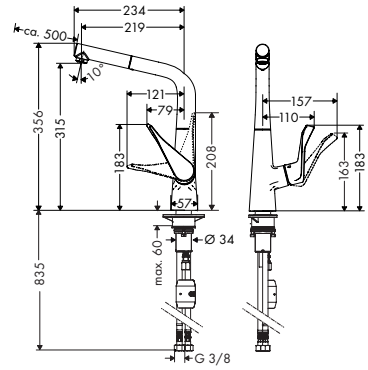

Sustainability

EcoSmart

Technologies

Pull-out | Comfort Zone | sBox Kitchen

Spray types

Laminar Spray

Certificates/declarations

EPD

Overview variants

ComfortZone	Hose retraction	Extension length (cm)	EcoSmart	Max. flow rate at 3 bar (l/min)	Finish	Code no.
320	sBox	up to 76 cm	–	7.7	Chrome	73812000
					Stainless Steel Finish	73812800
320	sBox	up to 76 cm	■	5.3	Chrome	73828000
320	weight	up to 50 cm	–	7.7	Chrome	14821000
					Stainless Steel Finish	14821800
320	weight	up to 50 cm	■	5.8	Chrome	14781000

Metris M71 Single lever kitchen mixers, 1jet

Features of all variants

- ComfortZone 320
- l-spout
- swivel range adjustable in 3 steps 110°, 150° or 360°
- laminar spray
- connection dimension: DN15
- ceramic cartridge
- connection type: G ⅜ connections
- temperature limitation adjustable
- suitable for continuous flow water heaters
- significantly reduced splashing by soft start of the water flow



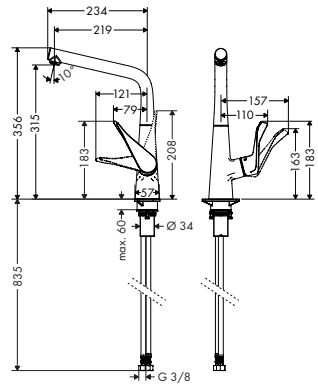

Sustainability

EcoSmart

Technologies

Comfort Zone

Spray types

Laminar Spray

Overview variants

ComfortZone	EcoSmart	Max. flow rate at 3 bar (l/min)	Finish	Code no.
320	–	12	Chrome	14822000
			Stainless Steel Finish	14822800

For more information about this product, please see the next page.

Measurements within scale drawings are in mm.
Technical specifications and units of measure are subject to change.

Metris M71 Single lever kitchen mixers, 1jet

Overview variants

ComfortZone	EcoSmart	Max. flow rate at 3 bar (l/min)	Finish	Code no.
320	■	4.5	Chrome	14782000

Metris M71 Single lever kitchen mixer 320, installation in front of a window, 1jet

Features

- ComfortZone 320
- swivel range adjustable in 3 steps 110°, 150° or 360°
- installation in front of the window, can be laid flat, base height 57 mm
- laminar spray
- connection dimension: DN15
- maximum flow rate at 3 bar: 12 l/min
- ceramic cartridge
- connection type: G ⅜ connections
- temperature limitation adjustable
- suitable for continuous flow water heaters
- significantly reduced splashing by soft start of the water flow



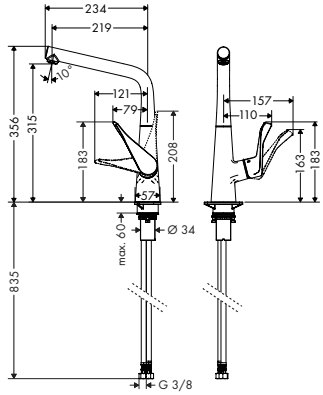

Technologies

Comfort Zone

Tilt Function

Spray types

Laminar Spray

Finish	Code no.
Chrome	14823000

Measurements within scale drawings are in mm.
Technical specifications and units of measure are subject to change.



Talis M51 | M52 | M54

Talis Select M51 Single lever kitchen mixers, pull-out spray, 2jet

Features of all variants

- swivel range adjustable in 2 steps to 110° or 150°
- laminar spray, shower spray
- lockable shower spray, spray returns through pressing spray diverter and spray returns automatically through handle closing
- Select button for a comfortable start/stop of the water flow
- MagFit magnetic shower support
- connection dimension: DN15
- ceramic cartridge
- connection type: G ⅜ connections
- temperature limitation adjustable
- integrated non-return valve
- suitable for continuous flow water heaters

220



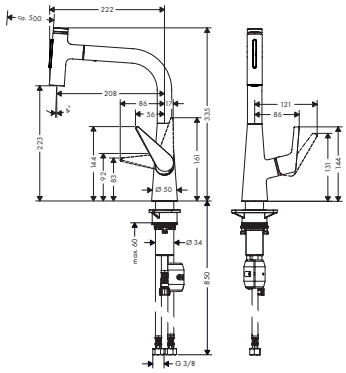

300



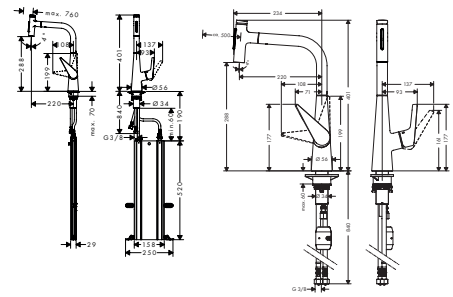

Technologies

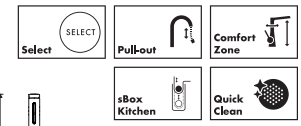

Spray types



Overview variants

ComfortZone	Hose retraction	Extension length (cm)	Max. flow rate at 3 bar (l/min)	Finish	Code no.
220	weight	up to 50 cm	7	Chrome	72824000
				Stainless Steel Finish	72824800
300	sBox	up to 76 cm	8	Chrome	73867000
				Stainless Steel Finish	73867800
300	weight	up to 50 cm	8	Chrome	72823000
				Stainless Steel Finish	72823800

Talis Select M51 Single lever kitchen mixers, pull-out spout, 1jet

Features of all variants

- swivel range adjustable in 2 steps to 110° or 150°
- normal spray
- Select button for a comfortable start/stop of the water flow
- MagFit magnetic shower support
- connection dimension: DN15
- ceramic cartridge
- connection type: G ⅜ connections
- temperature limitation adjustable
- integrated non-return valve
- suitable for continuous flow water heaters

220

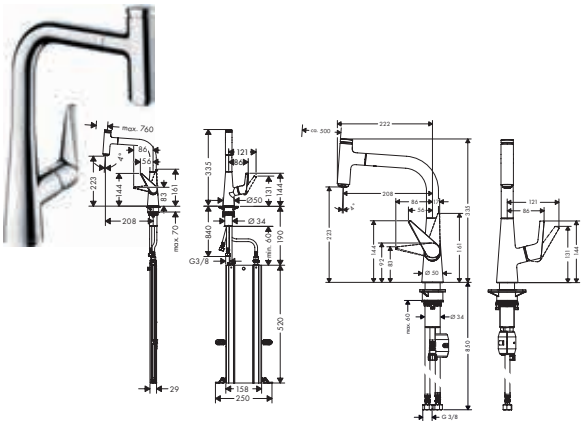

300



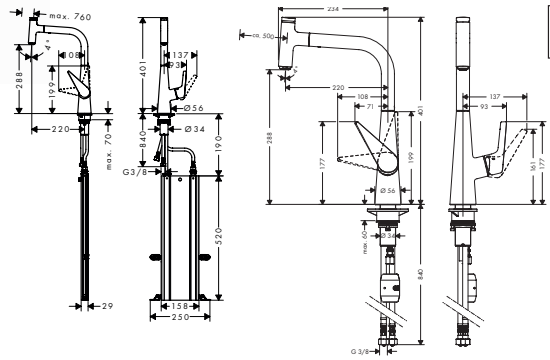

Sustainability



Technologies

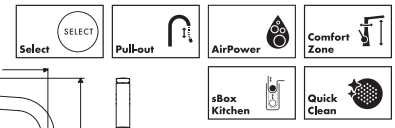

Spray types



Measurements within scale drawings are in mm.
Technical specifications and units of measure are subject to change.

Talis Select M51 Single lever kitchen mixers, pull-out spout, 1jet

Overview variants

ComfortZone	Hose retraction	Extension length (cm)	EcoSmart	Max. flow rate at 3 bar (l/min)	Finish	Code no.
220	sBox	up to 76 cm	–	8	Chrome	73852000
					Stainless Steel Finish	73852800
220	weight	up to 50 cm	–	8	Stainless Steel Finish	72822800
300	sBox	up to 76 cm	–	8	Chrome	73853000
					Stainless Steel Finish	73853800
300	weight	up to 50 cm	–	8	Chrome	72821000
					Stainless Steel Finish	72821800
300	weight	up to 50 cm	■	4.4	Chrome	72826000

Talis Select M51 Single lever kitchen mixers, 1jet

Features of all variants

- ComfortZone 300
- l-spout
- swivel range adjustable in 3 steps 110°, 150° or 360°
- normal spray
- Select button for a comfortable start/stop of the water flow
- connection dimension: DN15
- ceramic cartridge
- connection type: G ⅜ connections
- temperature limitation adjustable
- integrated non-return valve
- suitable for continuous flow water heaters



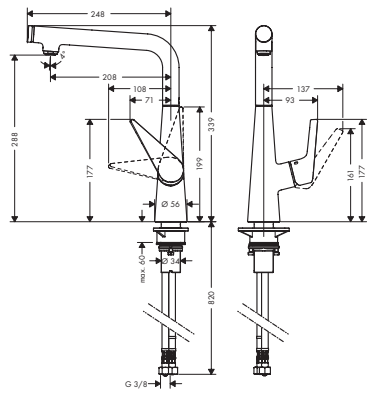

Sustainability

EcoSmart

Technologies

Select · AirPower · Comfort Zone · Quick Clean

Spray types

Normal Spray

Certificates/declarations

EPD

Overview variants

ComfortZone	EcoSmart	Max. flow rate at 3 bar (l/min)	Finish	Code no.
300	–	9	Chrome	72820000
			Stainless Steel Finish	72820800
300	■	4.7	Chrome	72825000

Measurements within scale drawings are in mm.
Technical specifications and units of measure are subject to change.

Talis M51 Single lever kitchen mixers, pull-out spray, 2jet

Features of all variants

- swivel range adjustable in 2 steps to 110° or 150°
- laminar spray, shower spray
- lockable shower spray, spray returns through pressing spray diverter
- MagFit magnetic shower support
- connection dimension: DN15
- ceramic cartridge
- connection type: G ⅜ connections
- temperature limitation adjustable
- integrated non-return valve
- suitable for continuous flow water heaters

160



200



Sustainability

EcoSmart

Technologies

Pull-out | Comfort Zone | sBox Kitchen | Quick Clean

Spray types

Laminar Spray | Shower Spray

Certificates/declarations

EPD

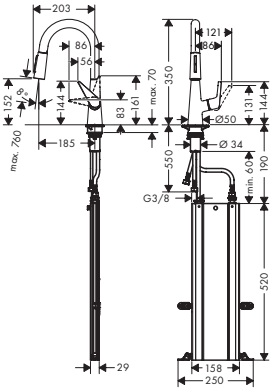

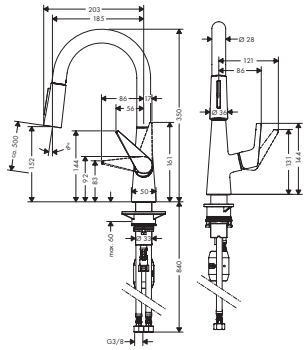

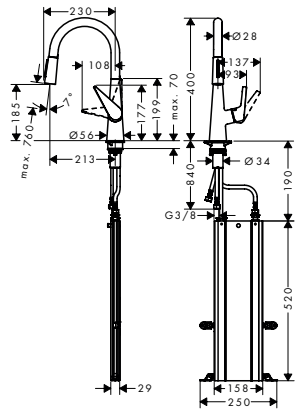

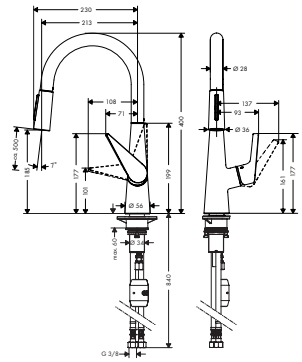

Overview variants

ComfortZone	Hose retraction	Extension length (cm)	EcoSmart	Max. flow rate at 3 bar (l/min)	Finish	Code no.
160	sBox	up to 76 cm	–	9	Chrome	73850000
160	weight	up to 50 cm	–	9	Chrome	72815000
					Stainless Steel Finish	72815800
200	sBox	up to 76 cm	–	9	Chrome	73851000
					Stainless Steel Finish	73851800
200	sBox	up to 76 cm	■	4.8	Chrome	73876000
200	weight	up to 50 cm	–	9	Chrome	72813000
					Stainless Steel Finish	72813800
200	weight	up to 50 cm	■	4.7	Chrome	72817000

Measurements within scale drawings are in mm.
Technical specifications and units of measure are subject to change.

Talis M51 Single lever kitchen mixers, 1jet

Features of all variants

- swivel range adjustable in 3 steps 110°, 150° or 360°
- normal spray
- connection dimension: DN15
- ceramic cartridge
- connection type: G ⅜ connections
- temperature limitation adjustable
- suitable for continuous flow water heaters

220



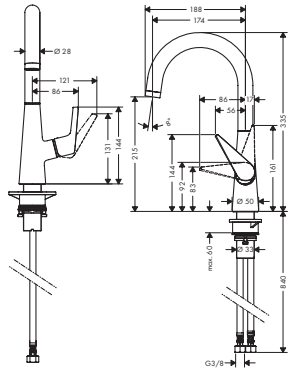

260



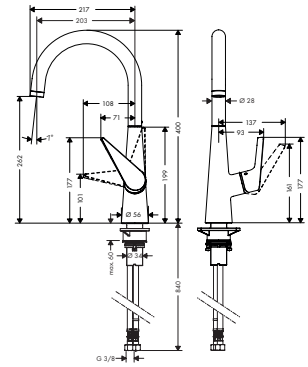

Sustainability

EcoSmart

Technologies

AirPower · Comfort Zone · Quick Clean

Spray types

Normal Spray

Certificates/declarations

EPD

Overview variants

ComfortZone	EcoSmart	Max. flow rate at 3 bar (l/min)	Finish	Code no.
220	–	10	Chrome	72814000
			Stainless Steel Finish	72814800
260	–	10	Chrome	72810000
			Stainless Steel Finish	72810800
260	■	4.5	Chrome	72816000

Talis M51 Single lever kitchen mixer 260, LowPressure/vented hot water cylinders, 1jet

Features

- for vented hot water cylinders (no pressure)
- ComfortZone 260
- swivel range adjustable in 3 steps 110°, 150° or 360°
- normal spray
- connection dimension: DN15
- maximum flow rate at 3 bar: 5 l/min
- ceramic cartridge
- connection type: G ⅜ connections
- temperature limitation adjustable
- not suitable for continuous flow water heaters
- EU taxonomy: max. 6 l/min - Substantial Contribution (SC) possible



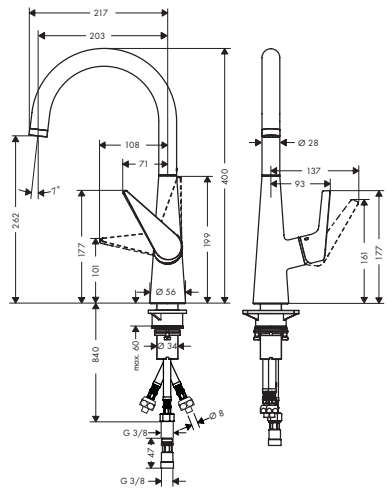

Technologies

AirPower · Comfort Zone · Low Pressure

Spray types

Normal Spray

Finish	Code no.
Chrome	72812000

Measurements within scale drawings are in mm.
Technical specifications and units of measure are subject to change.

Talis M52 Single lever kitchen mixer 170, pull-out spray, 2jet

Features

- consists of: single lever kitchen mixer
- ComfortZone 170
- swivel range 150°
- normal spray, shower spray
- lockable shower spray, spray returns automatically through handle closing
- quick connect hose
- connection dimension: DN15
- maximum flow rate at 3 bar: 10 l/min
- ceramic cartridge
- connection type: G ⅜ connections
- temperature limitation adjustable
- integrated non-return valve
- suitable for continuous flow water heaters
- extension length up to 50 cm



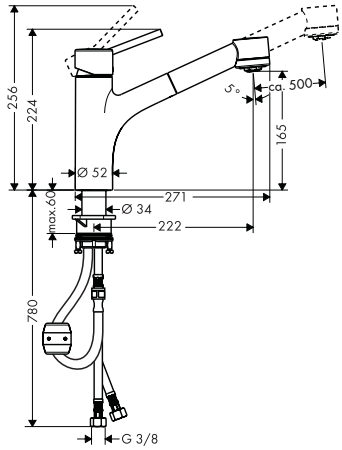

Technologies

Pull-out | AirPower | Comfort Zone | Quick Clean

Spray types

Shower Spray | Normal Spray

Certificates/declarations

EPD

Finish	Code no.
Chrome	32841000

Measurements within scale drawings are in mm.
Technical specifications and units of measure are subject to change.

Talis M54 Single lever kitchen mixers, pull-out spray, 2jet

Features of all variants

- ComfortZone 210
- swivel range adjustable in 4 steps 60°, 110°, 150° or 360°
- laminar spray, shower spray
- lockable shower spray, spray returns through pressing spray diverter and spray returns automatically through handle closing
- connection dimension: DN15
- ceramic cartridge
- connection type: G ⅜ connections
- temperature limitation adjustable
- integrated non-return valve
- suitable for continuous flow water heaters
- tap hole with Ø 35 mm required



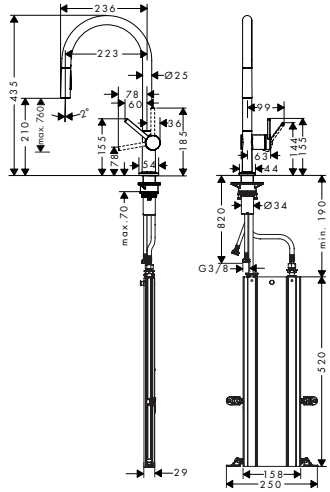

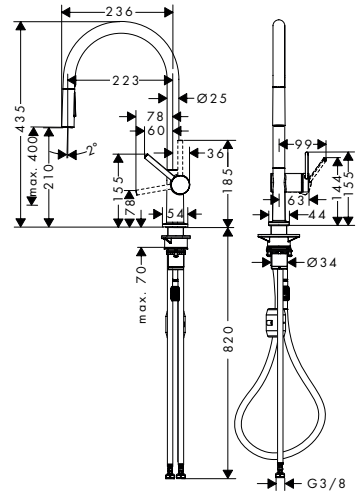

Sustainability

EcoSmart

Technologies

Pull-out | Comfort Zone | sBox Kitchen | Quick Clean

Spray types

Laminar Spray | Shower Spray

Certificates/declarations

EPD

Overview variants

ComfortZone	Hose retraction	Extension length (cm)	EcoSmart	Max. flow rate at 3 bar (l/min)	Finish	Code no.
210	sBox	up to 76 cm	–	7	Chrome	72801000
					Brushed Black Chrome	72801340
					Matt Black	72801670
					Stainless Steel Finish	72801800
210	weight	up to 50 cm	–	8	Chrome	72800000
					Brushed Black Chrome	72800340
					Matt Black	72800670
					Stainless Steel Finish	72800800
210	weight	up to 50 cm	■	5	Chrome	72842000
					Matt Black	72842670

Measurements within scale drawings are in mm.
Technical specifications and units of measure are subject to change.

Talis M54 Single lever kitchen mixers, pull-out spout, 1jet

Features of all variants

- ComfortZone 210
- swivel range adjustable in 4 steps 60°, 110°, 150° or 360°
- normal spray
- connection dimension: DN15
- maximum flow rate at 3 bar: 7 l/min
- ceramic cartridge
- connection type: G ⅜ connections
- temperature limitation adjustable
- integrated non-return valve
- suitable for continuous flow water heaters
- tap hole with Ø 35 mm required



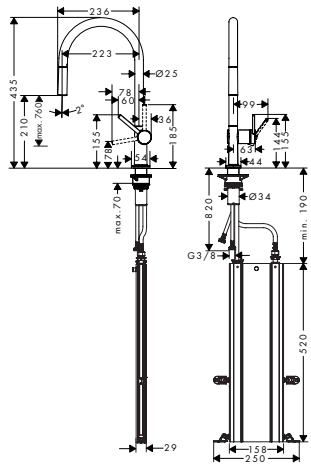

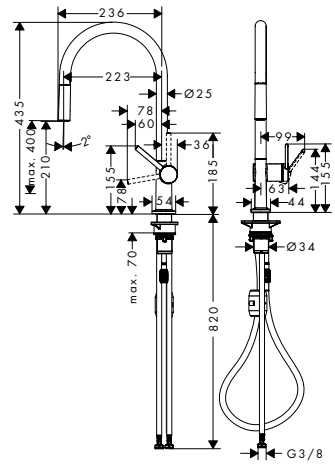

Technologies

Pull-out · AirPower · Comfort Zone · sBox Kitchen · Quick Clean

Spray types

Normal Spray

Certificates/declarations

EPD

Overview variants

ComfortZone	Hose retraction	Extension length (cm)	Max. flow rate at 3 bar (l/min)	Finish	Code no.
210	sBox	up to 76 cm	7	Chrome	72803000
				Matt Black	72803670
				Stainless Steel Finish	72803800
210	weight	up to 50 cm	7	Chrome	72802000
				Matt Black	72802670
				Stainless Steel Finish	72802800

Talis M54 Single lever kitchen mixers, 1jet

Features of all variants

- ComfortZone 220
- swivel range adjustable in 4 steps 60°, 110°, 150° or 360°
- laminar spray
- connection dimension: DN15
- ceramic cartridge
- connection type: G ⅜ connections
- temperature limitation adjustable
- suitable for continuous flow water heaters
- tap hole with Ø 35 mm required



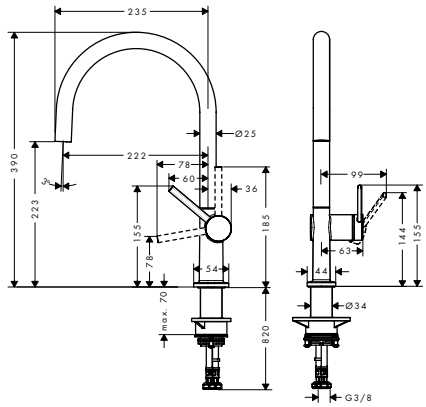

Sustainability

EcoSmart

Technologies

Comfort Zone · Quick Clean

Spray types

Laminar Spray

Certificates/declarations

EPD

Measurements within scale drawings are in mm.
Technical specifications and units of measure are subject to change.

Talis M54 Single lever kitchen mixers, 1jet

Overview variants

ComfortZone	EcoSmart	Max. flow rate at 3 bar (l/min)	Finish	Code no.
220	–	9	Chrome	72804000
			Matt Black	72804670
			Stainless Steel Finish	72804800
220	■	5	Chrome	72843000
			Matt Black	72843670

Talis M54 Single lever kitchen mixers, 1jet

Features of all variants

- ComfortZone 220
- swivel range adjustable in 4 steps 60°, 110°, 150° or 360°
- laminar spray
- connection dimension: DN15
- ceramic cartridge
- connection type: G ⅜ connections
- temperature limitation adjustable
- suitable for continuous flow water heaters
- tap hole with Ø 35 mm required



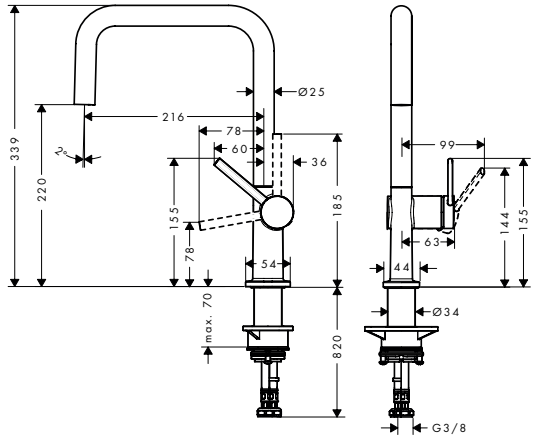

Sustainability

EcoSmart

Technologies

Comfort Zone

Quick Clean

Spray types

Laminar Spray

Certificates/declarations

EPD

Overview variants

ComfortZone	EcoSmart	Max. flow rate at 3 bar (l/min)	Finish	Code no.
220	–	9	Chrome	72806000
			Matt Black	72806670
			Stainless Steel Finish	72806800
220	■	5.7	Chrome	72844000
			Matt Black	72844670

Measurements within scale drawings are in mm.
Technical specifications and units of measure are subject to change.

Talis M54 Single lever kitchen mixers, pull-out spout, 1jet

Features of all variants

- ComfortZone 270
- l-spout
- swivel range adjustable in 4 steps 60°, 110°, 150° or 360°
- laminar spray
- connection dimension: DN15
- ceramic cartridge
- connection type: G ⅜ connections
- temperature limitation adjustable
- integrated non-return valve
- suitable for continuous flow water heaters



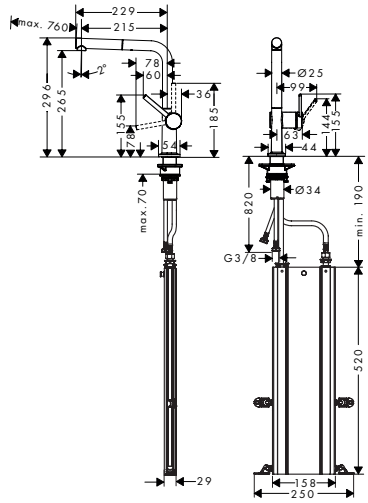

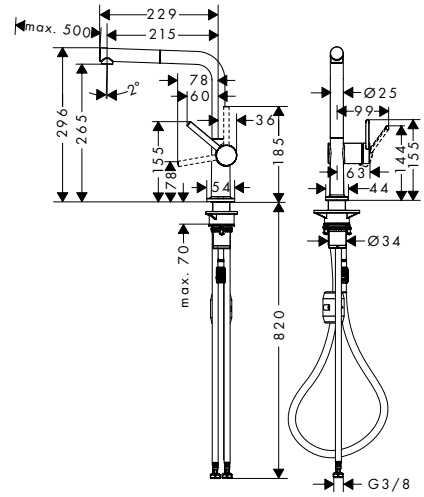

Sustainability

EcoSmart

Technologies

Pull-out · Comfort Zone · sBox Kitchen · Quick Clean

Spray types

Laminar Spray

Certificates/declarations

EPD

Overview variants

ComfortZone	Hose retraction	Extension length (cm)	EcoSmart	Max. flow rate at 3 bar (l/min)	Finish	Code no.
270	sBox	up to 76 cm	–	7	Chrome	72809000
					Brushed Black Chrome	72809340
					Matt Black	72809670
					Stainless Steel Finish	72809800
270	weight	up to 50 cm	–	8	Chrome	72808000
					Brushed Black Chrome	72808340
					Matt Black	72808670
					Stainless Steel Finish	72808800
270	weight	up to 50 cm	■	4.9	Chrome	72845000
					Matt Black	72845670

Measurements within scale drawings are in mm.
Technical specifications and units of measure are subject to change.

Talis M54 Single lever kitchen mixer 270, 1jet

Features

- ComfortZone 270
- l-spout
- swivel range adjustable in 4 steps 60°, 110°, 150° or 360°
- laminar spray
- connection dimension: DN15
- maximum flow rate at 3 bar: 8,4 l/min
- ceramic cartridge
- connection type: G ⅜ connections
- temperature limitation adjustable
- suitable for continuous flow water heaters
- tap hole with Ø 35 mm required



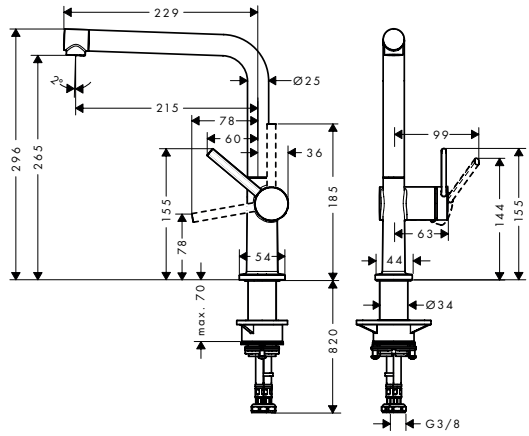

Technologies

Comfort Zone · Quick Clean

Spray types

Laminar Spray

Certificates/declarations

EPD

Finish	Code no.
Chrome	72840000
Brushed Black Chrome	72840340
Matt Black	72840670
Stainless Steel Finish	72840800

Measurements within scale drawings are in mm.
Technical specifications and units of measure are subject to change.



Cento

Cento Single lever kitchen mixer XXL, Semi-Pro, 2jet

Features

- ComfortZone 190
- swivel range 360°
- normal spray, shower spray
- lockable shower spray, spray returns through pressing spray diverter
- connection dimension: DN15
- maximum flow rate at 3 bar: 10 l/min
- ceramic cartridge with Eco handle position for a reduced flowrate by up to 50%
- connection type: G ⅜ connections
- temperature limitation adjustable
- integrated non-return valve
- suitable for continuous flow water heaters



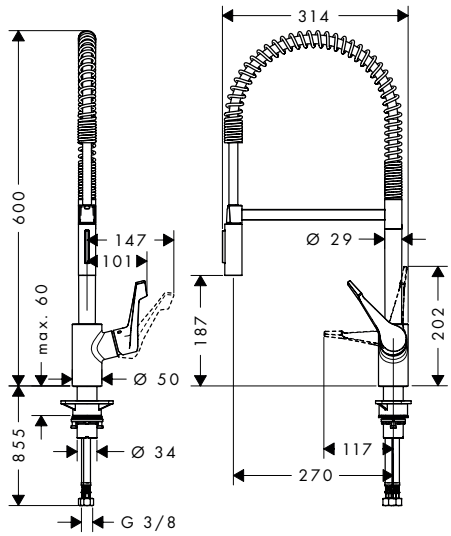

Sustainability

Eco Selection

Technologies

Comfort Zone | Quick Clean

Spray types

Shower Spray | Normal Spray

Certificates/declarations

EPD

Finish	Code no.
Chrome	14806000

Measurements within scale drawings are in mm.
Technical specifications and units of measure are subject to change.



Focus M41 | M42

Focus M41 Single lever kitchen mixers, pull-out spray, 2jet

Features of all variants

- ComfortZone 240
- laminar spray, shower spray
- MagFit magnetic shower support
- connection dimension: DN15
- ceramic cartridge
- connection type: G ⅜ connections
- temperature limitation adjustable
- integrated non-return valve
- suitable for continuous flow water heaters



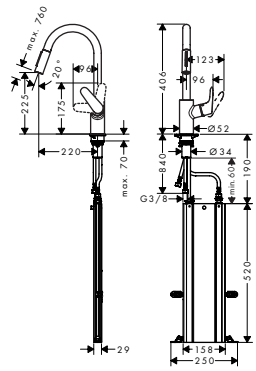

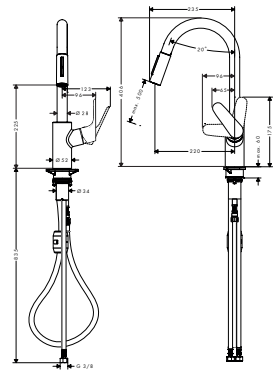

Sustainability

EcoSmart

Technologies

Pull-out | Comfort Zone | sBox Kitchen | Quick Clean

Spray types

Laminar Spray | Shower Spray

Certificates/declarations

EPD

Overview variants

ComfortZone	Hose retraction	Extension length (cm)	EcoSmart	Max. flow rate at 3 bar (l/min)	Finish	Code no.
240	sBox	up to 76 cm	–	10	Chrome	73880000
					Stainless Steel Finish	73880800
240	sBox	up to 76 cm	■	4.4	Chrome	73895000
240	weight	up to 50 cm	–	10	Chrome	31815000
					Matt Black	31815670
					Stainless Steel Finish	31815800
240	weight	up to 50 cm	■	5.8	Chrome	31833000

Focus M41 Single lever kitchen mixers, 1jet

Features of all variants

- swivel range adjustable in 3 steps 110°, 150° or 360°
- connection dimension: DN15
- ceramic cartridge
- connection type: G ⅜ connections
- temperature limitation adjustable



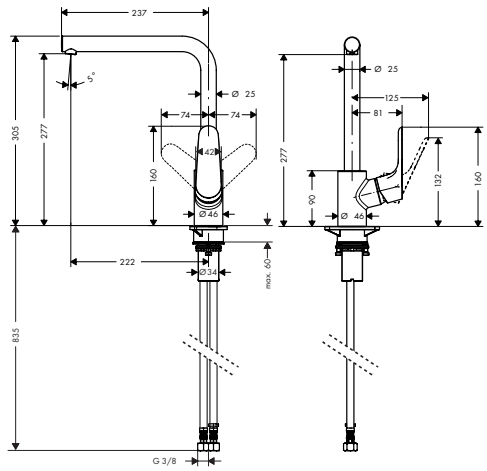

Sustainability

EcoSmart

Technologies

AirPower | Comfort Zone | Low Pressure

Spray types

Laminar Spray | Normal Spray

Certificates/declarations

EPD

Overview variants

ComfortZone	EcoSmart	Max. flow rate at 3 bar (l/min)	Finish	Code no.
260	–	5	Chrome	31822000

Measurements within scale drawings are in mm.
Technical specifications and units of measure are subject to change.

Focus M41 Single lever kitchen mixers, 1jet

Overview variants

ComfortZone	EcoSmart	Max. flow rate at 3 bar (l/min)	Finish	Code no.
280	–	12	Chrome	31817000
			Matt Black	31817670
			Stainless Steel Finish	31817800
280	■	4.7	Chrome	31827000

Focus M41 Single lever kitchen mixers, 1jet

Features of all variants

- ComfortZone 260
- swivel range adjustable in 3 steps 110°, 150° or 360°
- normal spray
- connection dimension: DN15
- ceramic cartridge
- temperature limitation adjustable
- suitable for continuous flow water heaters



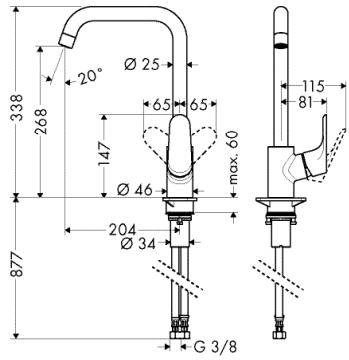

Sustainability

EcoSmart

Technologies

AirPower | Comfort Zone | Quick Clean

Spray types

Normal Spray

Certificates/declarations

EPD

Overview variants

ComfortZone	EcoSmart	Max. flow rate at 3 bar (l/min)	Finish	Code no.
260	–	12	Chrome	31820000
			Matt Black	31820670
			Stainless Steel Finish	31820800
260	■	4.6	Chrome	31821000
			Stainless Steel Finish	31821800
260	–	5.2	Chrome	31820007

Measurements within scale drawings are in mm.
Technical specifications and units of measure are subject to change.

Focus M41 Single lever kitchen mixer 260, LowPressure/vented hot water cylinders, 1jet

Features

- for vented hot water cylinders (no pressure)
- ComfortZone 260
- swivel range adjustable in 3 steps 110°, 150° or 360°
- laminar spray
- connection dimension: DN15
- maximum flow rate at 3 bar: 5 l/min
- ceramic cartridge
- connection type: G ⅜ connections
- temperature limitation adjustable
- not suitable for continuous flow water heaters
- EU taxonomy: max. 6 l/min - Substantial Contribution (SC) possible



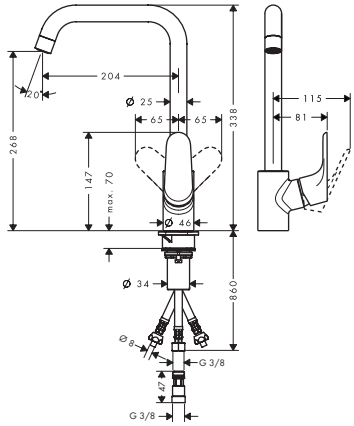

Technologies

AirPower | Comfort Zone | Low Pressure

Spray types

Laminar Spray

Certificates/declarations

EPD

Finish	Code no.
Chrome	31822000

Focus M41 Single lever kitchen mixers, 1jet

Features of all variants

- ComfortZone 160
- swivel range 360°
- normal spray
- connection dimension: DN15
- ceramic cartridge
- connection type: G ⅜ connections
- temperature limitation adjustable
- suitable for continuous flow water heaters



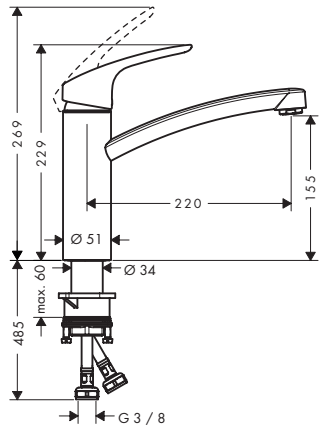

Sustainability

EcoSmart

Technologies

AirPower | Comfort Zone | Quick Clean

Spray types

Normal Spray

Certificates/declarations

EPD

Overview variants

ComfortZone	EcoSmart	Max. flow rate at 3 bar (l/min)	Finish	Code no.
160	–	12	Chrome	31806000
			Stainless Steel Finish	31806800
160	■	5	Chrome	31826000

Measurements within scale drawings are in mm.
Technical specifications and units of measure are subject to change.

Focus M41 Single lever kitchen mixer 160, CoolStart, EcoSelection, 1jet

Features

- ComfortZone 160
- cold water in basic handle position
- swivel range 360°
- connection dimension: DN15
- maximum flow rate at 3 bar: 13,8 l/min
- ceramic cartridge with Eco handle position for a reduced flowrate by up to 50%
- connection type: G ⅜ connections
- temperature limitation adjustable
- suitable for continuous flow water heaters



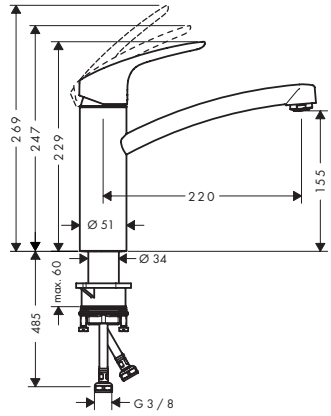

Sustainability

Eco Selection, CoolStart

Technologies

AirPower, Comfort Zone, Quick Clean

Certificates/declarations

EPD

Finish	Code no.
Chrome	31816000

Focus M41 Single lever kitchen mixer 160, LowPressure/vented hot water cylinders, 1jet

Features

- for vented hot water cylinders (no pressure)
- ComfortZone 160
- swivel range 150°
- laminar spray
- connection dimension: DN15
- maximum flow rate at 3 bar: 5 l/min
- ceramic cartridge
- connection type: G ⅜ connections
- temperature limitation adjustable
- not suitable for continuous flow water heaters
- EU taxonomy: max. 6 l/min - Substantial Contribution (SC) possible



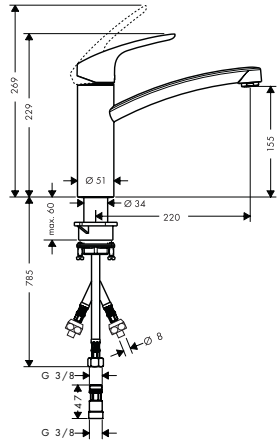

Technologies

Comfort Zone, Low Pressure

Spray types

Laminar Spray

Certificates/declarations

EPD

Finish	Code no.
Chrome	31804000

Focus M41 Single lever kitchen mixer 240, 1jet

Features

- connection dimension: DN15
- maximum flow rate at 3 bar: 12 l/min
- ceramic cartridge
- connection type: G ½ connections
- not suitable for continuous flow water heaters



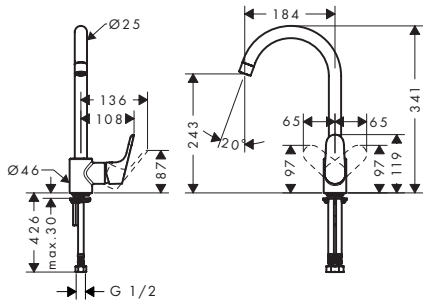

Technologies

AirPower

Finish	Code no.
Chrome	31800007

Focus M41 Single lever kitchen mixer, wall-mounted lowspout, 1jet

Features

- swivel range 180°
- normal spray
- centre distance 150 ± 12 mm
- connection dimension: DN15
- maximum flow rate at 3 bar: 12 l/min
- ceramic cartridge
- connection type: s-shaped connections
- temperature limitation adjustable
- suitable for continuous flow water heaters



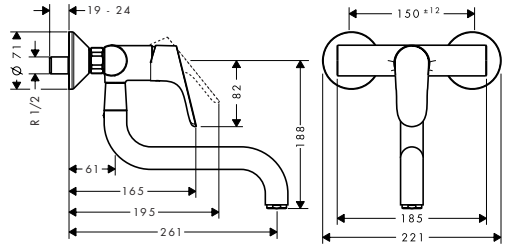

Technologies

AirPower

Quick Clean

Spray types

Normal Spray

Certificates/declarations

EPD

Finish	Code no.
Chrome	31825000

Measurements within scale drawings are in mm.
Technical specifications and units of measure are subject to change.

Focus M42 Single lever kitchen mixers, pull-out spray, 2jet

Features of all variants

- swivel range 360°
- laminar spray, shower spray
- lockable shower spray, spray returns through pressing spray diverter and spray returns automatically through handle closing
- MagFit magnetic shower support
- connection dimension: DN15
- ceramic cartridge
- connection type: G ⅜ connections
- temperature limitation adjustable
- integrated non-return valve
- suitable for continuous flow water heaters

180



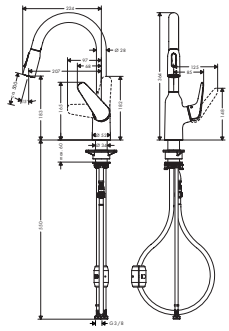

220



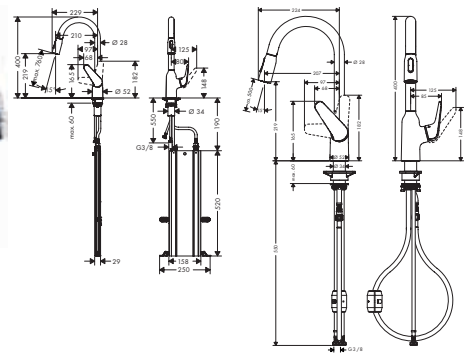

Sustainability

EcoSmart

Technologies

Pull-out | Comfort Zone | sBox Kitchen | Quick Clean

Spray types

Laminar Spray | Shower Spray

Certificates/declarations

EPD

Overview variants

ComfortZone	Hose retraction	Extension length (cm)	EcoSmart	Max. flow rate at 3 bar (l/min)	Finish	Code no.
180	weight	up to 50 cm	–	8	Chrome	71801000
					Stainless Steel Finish	71801800
180	weight	up to 50 cm	■	4.9	Chrome	71862000
220	sBox	up to 76 cm	–	9	Chrome	71820000
220	weight	up to 50 cm	–	8	Chrome	71800000

Focus M42 Single lever kitchen mixer 220, 1jet

Features

- ComfortZone 220
- swivel range 360°
- normal spray
- connection dimension: DN15
- maximum flow rate at 3 bar: 10 l/min
- ceramic cartridge
- connection type: G ⅜ connections
- temperature limitation adjustable
- suitable for continuous flow water heaters



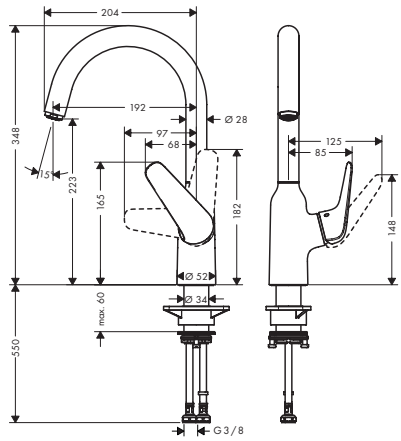

Technologies

AirPower | Comfort Zone | Quick Clean

Spray types

Normal Spray

Certificates/declarations

EPD

Finish	Code no.
Chrome	71802000

Measurements within scale drawings are in mm.
Technical specifications and units of measure are subject to change.

Focus M42 Single lever kitchen mixers, 1jet

Features of all variants

- swivel range 360°
- normal spray
- connection dimension: DN15
- maximum flow rate at 3 bar: 12 l/min
- ceramic cartridge
- connection type: G ⅜ connections
- temperature limitation adjustable
- suitable for continuous flow water heaters

100



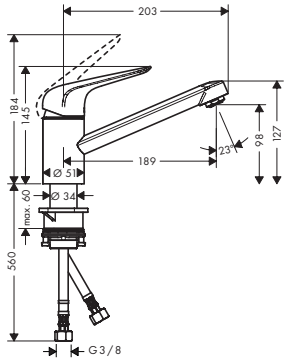

120



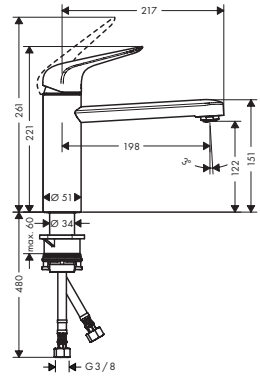

Technologies

AirPower | Comfort Zone | Quick Clean

Spray types

Normal Spray

Overview variants

ComfortZone	Finish	Code no.
100	Chrome	71808000
	Stainless Steel Finish	71808800
120	Chrome	71806000
	Stainless Steel Finish	71806800

Focus M42 Single lever kitchen mixers, CoolStart, 1jet

Features of all variants

- cold water in basic handle position
- swivel range 360°
- normal spray
- connection dimension: DN15
- maximum flow rate at 3 bar: 12 l/min
- ceramic cartridge with Eco handle position for a reduced flowrate by up to 50%
- connection type: G ⅜ connections
- temperature limitation adjustable
- suitable for continuous flow water heaters

100



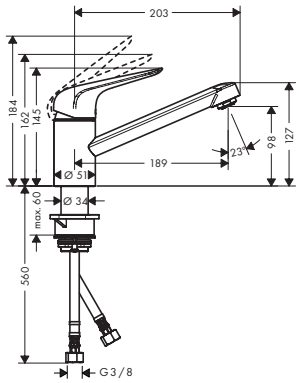

120



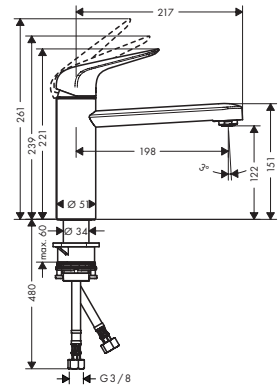

Sustainability

Eco Selection | CoolStart

Technologies

AirPower | Comfort Zone | Quick Clean

Spray types

Normal Spray

Certificates/declarations

EPD

Overview variants

ComfortZone	Finish	Code no.
100	Chrome	71809000
120	Chrome	71805000

Measurements within scale drawings are in mm.
Technical specifications and units of measure are subject to change.

Focus M42 Single lever kitchen mixer, CoolStart, EcoSmart, 1jet

Features of all variants

- cold water in basic handle position
- swivel range 360°
- normal spray
- connection dimension: DN15
- maximum flow rate at 3 bar: 4,6 l/min
- ceramic cartridge
- connection type: G ⅜ connections
- temperature limitation adjustable
- suitable for continuous flow water heaters
- EU taxonomy: max. 6 l/min - Substantial Contribution (SC) possible

100



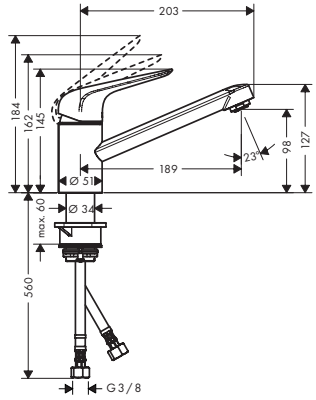

120



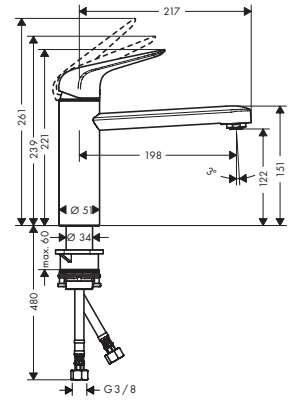

Sustainability

EcoSmart, CoolStart

Technologies

AirPower, Comfort Zone, Quick Clean

Spray types

Normal Spray

Overview variants

	ComfortZone	Finish	Code no.
	100	Chrome	71866000
	120	Chrome	71864000

Focus M42 Single lever kitchen mixer 120, LowPressure/vented hot water cylinders, 1jet

Features

- for vented hot water cylinders (no pressure)
- ComfortZone 120
- swivel range 360°
- laminar spray
- connection dimension: DN15
- maximum flow rate at 3 bar: 5 l/min
- ceramic cartridge
- connection type: G ⅜ connections
- temperature limitation adjustable
- not suitable for continuous flow water heaters
- EU taxonomy: max. 6 l/min - Substantial Contribution (SC) possible



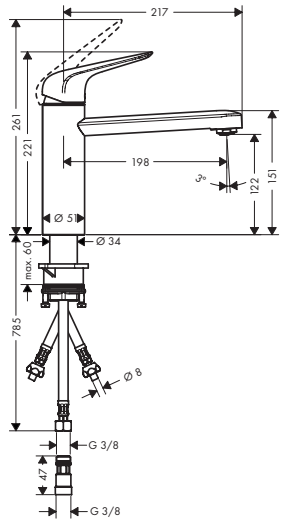

Technologies

AirPower, Comfort Zone, Low Pressure

Spray types

Laminar Spray

Finish	Code no.
Chrome	71804000

Measurements within scale drawings are in mm.
Technical specifications and units of measure are subject to change.

Focus M42 Single lever kitchen mixer 120, installation in front of a window, 1jet

Features

- ComfortZone 120
- swivel range 360°
- installation in front of the window, can be laid flat, base height 51 mm
- normal spray
- connection dimension: DN15
- maximum flow rate at 3 bar: 12 l/min
- ceramic cartridge
- connection type: G ⅜ connections
- temperature limitation adjustable
- suitable for continuous flow water heaters



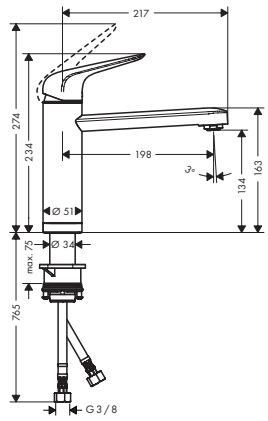

Technologies

AirPower · Comfort Zone · Quick Clean · Tilt Function

Spray types

Normal Spray

Certificates/declarations

EPD

Finish	Code no.
Chrome	71807000

Focus M42 Single lever kitchen mixers, pull-out spout, 1jet

Features of all variants

- ComfortZone 150
- swivel range 120°
- normal spray
- MagFit magnetic shower support
- connection dimension: DN15
- ceramic cartridge
- connection type: G ⅜ connections
- temperature limitation adjustable
- integrated non-return valve
- suitable for continuous flow water heaters



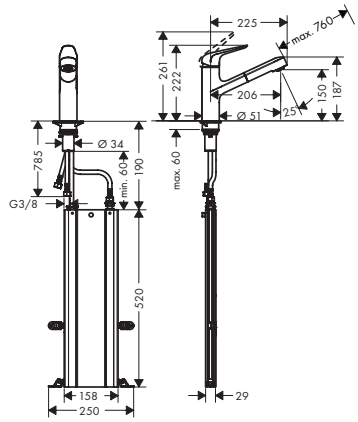

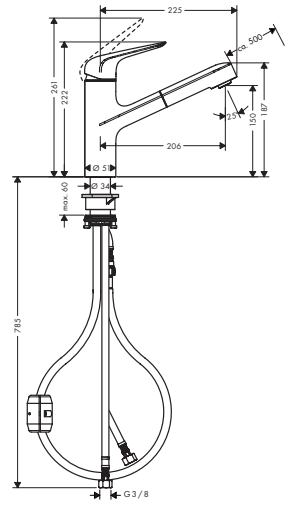

Sustainability

EcoSmart

Technologies

Pull-out · AirPower · Comfort Zone · sBox Kitchen · Quick Clean

Spray types

Normal Spray

Certificates/declarations

EPD

Overview variants

ComfortZone	Hose retraction	Extension length (cm)	EcoSmart	Max. flow rate at 3 bar (l/min)	Finish	Code no.
150	sBox	up to 76 cm	–	8	Chrome	71829000
					Stainless Steel Finish	71829800
150	weight	up to 50 cm	–	8	Chrome	71814000
					Stainless Steel Finish	71814800
150	weight	up to 50 cm	■	4.9	Chrome	71865000

Measurements within scale drawings are in mm.
Technical specifications and units of measure are subject to change.



Zesis M33

Zesis M33 Single lever kitchen mixers with metal pull-out spray

Features of all variants

- swivel range 150°
- laminar spray, shower spray
- lockable shower spray, spray returns through pressing spray diverter and spray returns automatically through handle closing
- connection dimension: DN15
- maximum flow rate at 3 bar: 8,2 l/min
- ceramic cartridge
- connection type: G ⅜ connections
- temperature limitation adjustable
- integrated non-return valve
- suitable for continuous flow water heaters
- metal pull-out spray

150



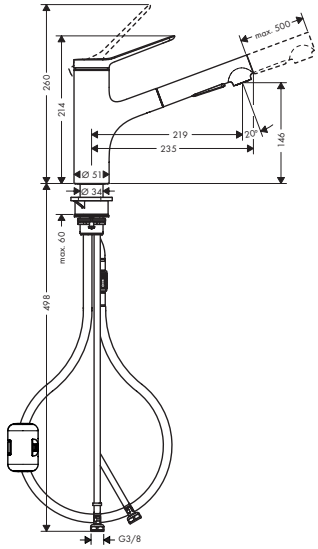

160



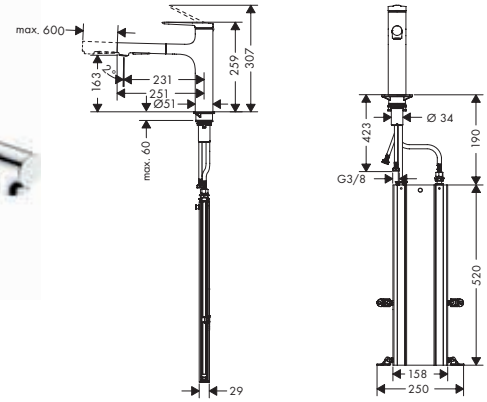

Technologies



Spray types



Overview variants

ComfortZone	Hose retraction	Extension length (cm)	Finish	Code no.
150	sBox	up to 76 cm	Chrome	74821000
			Matt Black	74821670
			Stainless Steel Finish	74821800
150	weight	up to 50 cm	Chrome	74820000
			Matt Black	74820670
			Stainless Steel Finish	74820800
160	sBox	up to 60 cm	Chrome	74823000
			Matt Black	74823670
			Stainless Steel Finish	74823800
160	weight	up to 50 cm	Chrome	74822000
			Matt Black	74822670
			Stainless Steel Finish	74822800

Measurements within scale drawings are in mm.
Technical specifications and units of measure are subject to change.

Zesis M33 Single lever kitchen mixers, pull-out spray, 2jet

Features of all variants

- swivel range 150°
- laminar spray, shower spray
- lockable shower spray, spray returns through pressing spray diverter and spray returns automatically through handle closing
- quick connect hose
- connection dimension: DN15
- ceramic cartridge
- connection type: G ⅜ connections
- temperature limitation adjustable
- integrated non-return valve
- suitable for continuous flow water heaters
- extension length up to 50 cm

150



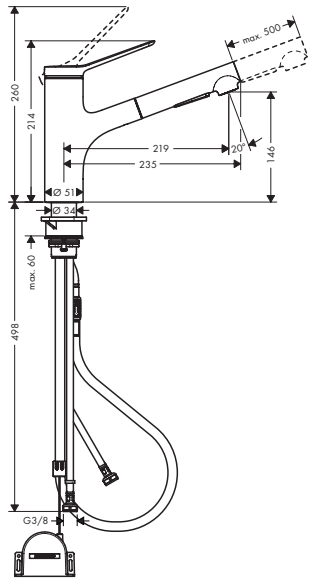

160



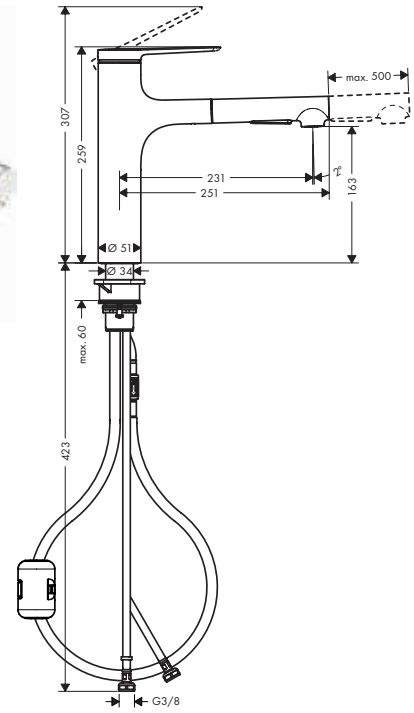

Sustainability

EcoSmart

Technologies

sBox lite · Pull-out · Comfort Zone · Quick Clean

Spray types

Laminar Spray · Shower Spray

Overview variants

ComfortZone	Hose retraction	Extension length (cm)	EcoSmart	Max. flow rate at 3 bar (l/min)	Finish	Code no.
150	sBox lite	up to 50 cm	–	8.2	Chrome	74803000
					Matt Black	74803670
					Stainless Steel Finish	74803800
150	weight	up to 50 cm	–	8.2	Chrome	74800000
					Matt Black	74800670
					Stainless Steel Finish	74800800
150	weight	up to 50 cm	■	4.6	Chrome	74810000
160	sBox lite	up to 50 cm	–	8.2	Chrome	74804000
					Matt Black	74804670
					Stainless Steel Finish	74804800
160	weight	up to 50 cm	–	8.2	Chrome	74801000
					Matt Black	74801670
					Stainless Steel Finish	74801800

Measurements within scale drawings are in mm.
Technical specifications and units of measure are subject to change.

Zesis M33 Single lever kitchen mixers, 1jet

Features of all variants

- ComfortZone 150
- swivel range adjustable in 3 steps 60°, 110° or 360°
- normal spray
- connection dimension: DN15
- ceramic cartridge
- connection type: G ⅜ connections
- temperature limitation adjustable



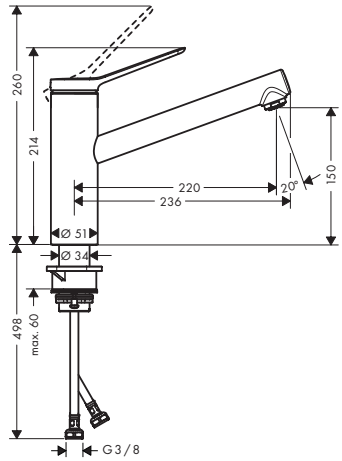

Sustainability

EcoSmart

Technologies

AirPower | Comfort Zone | Quick Clean

Spray types

Normal Spray

Overview variants

ComfortZone	EcoSmart	Max. flow rate at 3 bar (l/min)	Finish	Code no.
150	–	11.6	Chrome	74802000
			Matt Black	74802670
			Stainless Steel Finish	74802800
150	■	5	Chrome	74811000

Zesis M33 Single lever kitchen mixer 150, CoolStart, EcoSelection, 1jet

Features

- ComfortZone 150
- cold water in basic handle position
- swivel range adjustable in 2 steps 60° or 110°
- normal spray
- connection dimension: DN15
- maximum flow rate at 3 bar: 7,6 l/min
- ceramic cartridge with Eco handle position for a reduced flowrate by up to 50%
- connection type: G ⅜ connections
- temperature limitation adjustable
- suitable for continuous flow water heaters



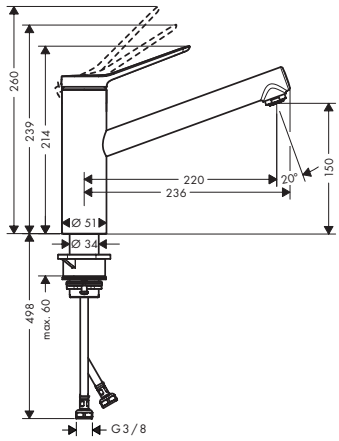

Sustainability

Eco Selection | CoolStart

Technologies

AirPower | Comfort Zone | Quick Clean

Spray types

Normal Spray

Finish	Code no.
Chrome	74813000

Measurements within scale drawings are in mm.
Technical specifications and units of measure are subject to change.

Zesis M33 Single lever kitchen mixer 160, installation in front of a window, 1jet

Features

- ComfortZone 160
- swivel range 150°
- installation in front of the window, can be laid flat, base height 51 mm
- normal spray
- connection dimension: DN15
- maximum flow rate at 3 bar: 11,6 l/min
- ceramic cartridge
- connection type: G ⅜ connections
- suitable for continuous flow water heaters



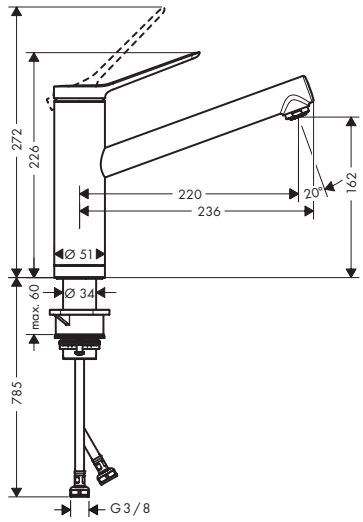

Technologies

AirPower · Comfort Zone · Quick Clean · Tilt Function

Spray types

Normal Spray

Finish	Code no.
Chrome	74805000



Logis M31 | M32

Logis M31 Single lever kitchen mixers, 1jet

Features of all variants

- ComfortZone 260
- swivel range adjustable in 3 steps 110°, 150° or 360°
- normal spray
- connection dimension: DN15
- ceramic cartridge
- connection type: G ⅜ connections
- temperature limitation adjustable
- suitable for continuous flow water heaters



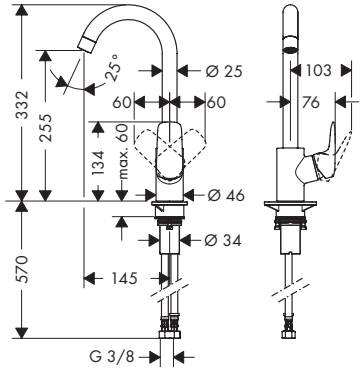

Sustainability

EcoSmart

Technologies

AirPower · Comfort Zone

Spray types

Normal Spray

Certificates/declarations

EPD

Overview variants

ComfortZone	EcoSmart	Max. flow rate at 3 bar (l/min)	Finish	Code no.
260	–	12	Chrome	71835000
260	■	4.7	Chrome	71861000

Logis M31 Single lever kitchen mixers, 1jet

Features of all variants

- swivel range 360°
- normal spray
- connection dimension: DN15
- maximum flow rate at 3 bar: 12 l/min
- ceramic cartridge
- connection type: G ⅜ connections
- temperature limitation adjustable
- suitable for continuous flow water heaters

120



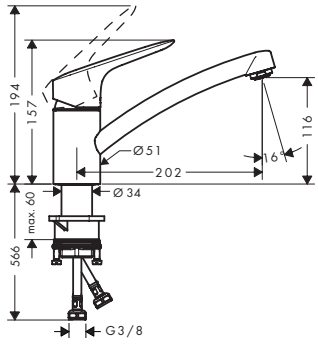

160



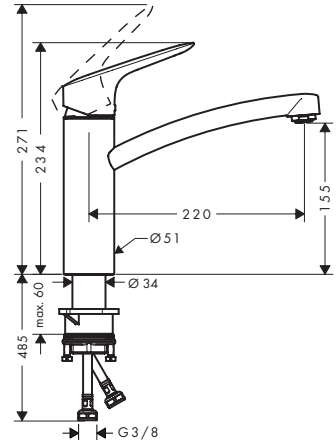

Technologies

AirPower · Comfort Zone

Spray types

Normal Spray

Certificates/declarations

EPD

Overview variants

ComfortZone	Max. flow rate at 3 bar (l/min)	Finish	Code no.
120	12	Chrome	71830000
160	12	Chrome	71832000

Measurements within scale drawings are in mm.
Technical specifications and units of measure are subject to change.

Logis M31 Single lever kitchen mixer 160, installation in front of a window, 1jet

Features

- ComfortZone 160
- swivel range 150°
- installation in front of the window, can be laid flat, base height 51 mm
- normal spray
- connection dimension: DN15
- maximum flow rate at 3 bar: 12 l/min
- ceramic cartridge
- connection type: G ⅜ connections
- temperature limitation adjustable
- suitable for continuous flow water heaters



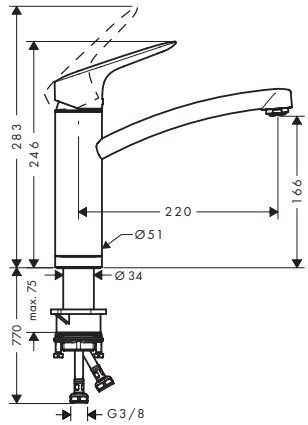

Technologies

AirPower | Comfort Zone | Tilt Function

Spray types

Normal Spray

Certificates/declarations

EPD

Finish	Code no.
Chrome	71833000

Logis M31 Single lever kitchen mixers, CoolStart, 1jet

Features of all variants

- cold water in basic handle position
- swivel range 360°
- normal spray
- connection dimension: DN15
- maximum flow rate at 3 bar: 12 l/min
- ceramic cartridge with Eco handle position for a reduced flowrate by up to 50%
- connection type: G ⅜ connections
- temperature limitation adjustable
- suitable for continuous flow water heaters

120



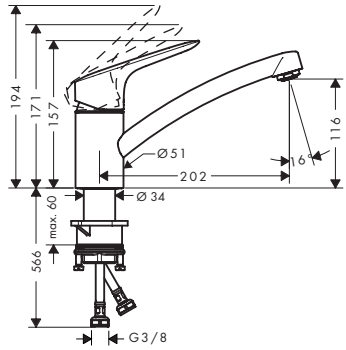

160



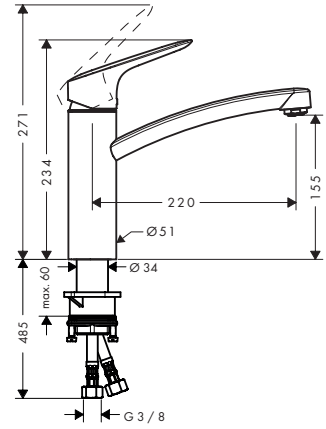

Sustainability

Eco Selection | CoolStart

Technologies

AirPower | Comfort Zone

Spray types

Normal Spray

Certificates/declarations

EPD

Overview variants

ComfortZone	Finish	Code no.
120	Chrome	71837000
160	Chrome	71839000

Measurements within scale drawings are in mm.
Technical specifications and units of measure are subject to change.

Logis M31 Single lever kitchen mixer 120, LowPressure/vented hot water cylinders, 1jet

Features

- for vented hot water cylinders (no pressure)
- ComfortZone 120
- swivel range 360°
- normal spray
- connection dimension: DN15
- maximum flow rate at 3 bar: 5 l/min
- ceramic cartridge
- connection type: G ⅜ connections
- temperature limitation adjustable
- not suitable for continuous flow water heaters
- EU taxonomy: max. 6 l/min - Substantial Contribution (SC) possible



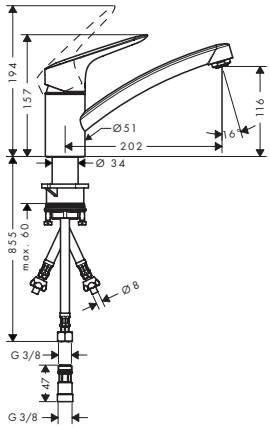

Technologies

Comfort Zone · Low Pressure

Spray types

Normal Spray

Certificates/declarations

EPD

Finish	Code no.
Chrome	71831000

Logis M31 Single lever kitchen mixer, wall-mounted lowspout, 1jet

Features

- swivel range 220°
- normal spray
- centre distance 150 ± 12 mm
- connection dimension: DN15
- maximum flow rate at 3 bar: 13 l/min
- ceramic cartridge
- connection type: s-shaped connections
- temperature limitation adjustable
- suitable for continuous flow water heaters



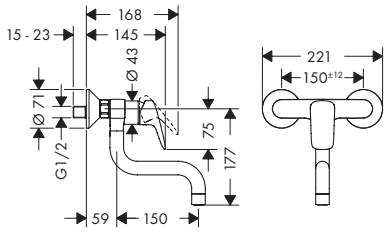

Technologies

AirPower

Spray types

Normal Spray

Certificates/declarations

EPD

Finish	Code no.
Chrome	71836000

Measurements within scale drawings are in mm.
Technical specifications and units of measure are subject to change.

Logis M32 2-handle kitchen mixer, wall-mounted, highspout, 1jet

Features

- swivel range 360°
- normal spray
- centre distance 150 ± 12 mm
- connection dimension: DN15
- maximum flow rate at 3 bar: 15 l/min
- ceramic valves 90°
- connection type: s-shaped connections
- temperature limitation adjustable
- suitable for continuous flow water heaters



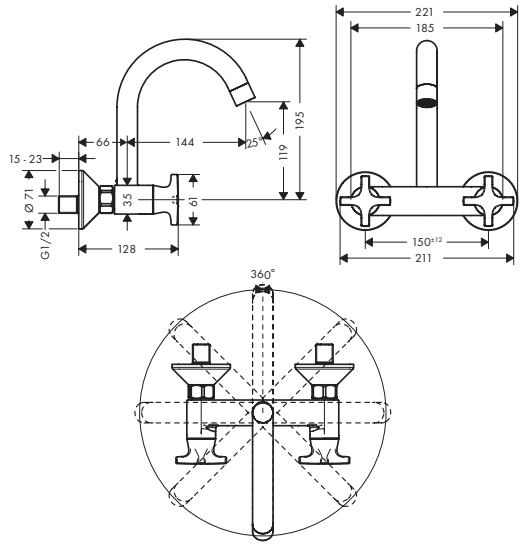

Technologies

AirPower

Spray types

Normal Spray

Finish	Code no.
Chrome	71286000

Measurements within scale drawings are in mm.
Technical specifications and units of measure are subject to change.



Vernis M35

Vernis Blend M35 Single lever kitchen mixer 210 with swivel spout

Features

- ComfortZone 210
- swivel range adjustable in 2 steps 120° or 360°
- normal spray
- connection dimension: DN15
- maximum flow rate at 3 bar: 11,1 l/min
- ceramic cartridge
- connection type: G ⅜ connections
- suitable for continuous flow water heaters



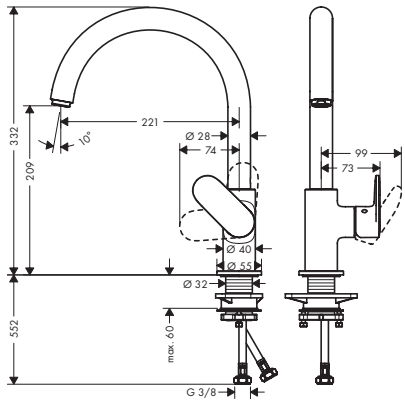

Technologies

AirPower | Comfort Zone

Spray types

Normal Spray

Finish	Code no.
Chrome	71870000
Matt Black	71870670

Vernis Shape M35 Single lever kitchen mixer 210 with swivel spout

Features

- ComfortZone 210
- swivel range adjustable in 2 steps 120° or 360°
- normal spray
- connection dimension: DN15
- maximum flow rate at 3 bar: 11,1 l/min
- ceramic cartridge
- connection type: G ⅜ connections
- suitable for continuous flow water heaters



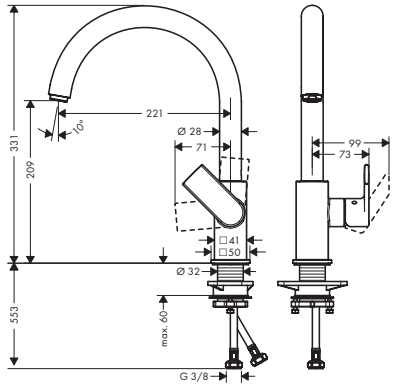

Technologies

AirPower | Comfort Zone

Spray types

Normal Spray

Finish	Code no.
Chrome	71871000
Matt Black	71871670

Vernis Blend M35 Single lever kitchen mixer 260 with swivel spout

Features

- ComfortZone 260
- swivel range adjustable in 3 steps 110°, 150° or 360°
- normal spray
- connection dimension: DN15
- maximum flow rate at 3 bar: 8 l/min
- ceramic cartridge
- connection type: G ½ connections
- suitable for continuous flow water heaters



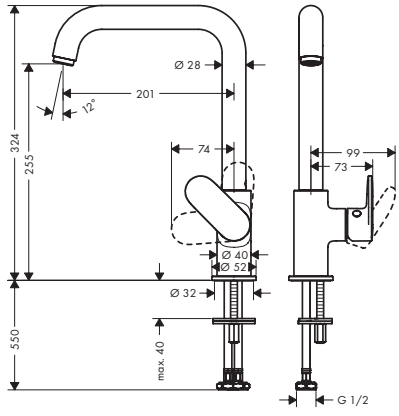

Technologies

AirPower | Comfort Zone

Spray types

Normal Spray

Finish	Code no.
Chrome	71857007
Matt Black	71857677

Measurements within scale drawings are in mm.
Technical specifications and units of measure are subject to change.

Vernis Shape M35 Single lever kitchen mixer 260 with swivel spout

Features

- ComfortZone 260
- swivel range 360°
- normal spray
- connection dimension: DN15
- maximum flow rate at 3 bar: 7 l/min
- ceramic cartridge
- connection type: G ½ connections
- suitable for continuous flow water heaters



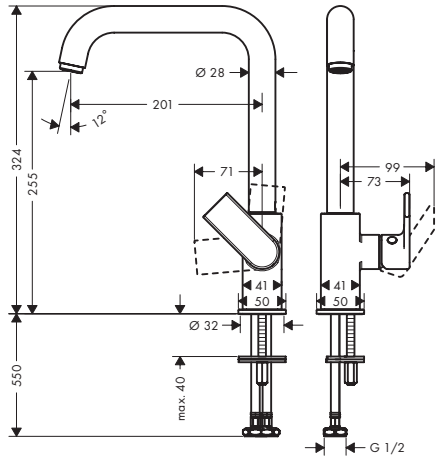

Technologies

AirPower | Comfort Zone

Spray types

Normal Spray

Finish	Code no.
Chrome	71858007
Matt Black	71858677

Measurements within scale drawings are in mm.
Technical specifications and units of measure are subject to change.

A41 Soap-/ lotion dispenser

Features

- suitable for matched design to selected kichen mixers
- projection 91 mm
- material: durable metal construction
- non-corroding outlet pipe
- filling capacity 500 ml
- dosage 2 ml
- easy to fill up from the top
- for installation in worktops up to 55 mm
- easy and save installation without tools needed
- mounting hole with 28 - 35 mm diameter needed



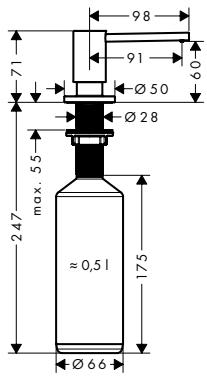

Finish	Code no.
Chrome	40438000
Brushed Black Chrome	40438340
Matt Black	40438670
Stainless Steel Finish	40438800

A51 Soap-/ lotion dispenser

Features

- suitable for matched design to selected kichen mixers
- projection 91 mm
- material: durable metal construction
- non-corroding outlet pipe
- filling capacity 500 ml
- dosage 2 ml
- easy to fill up from the top
- for installation in worktops up to 55 mm
- easy and save installation without tools needed
- mounting hole with 28 - 35 mm diameter needed



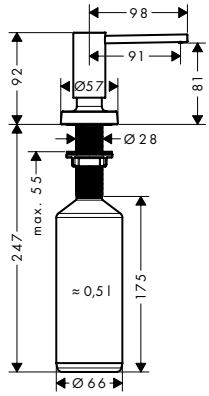

Finish	Code no.
Chrome	40448000
Matt Black	40448670
Stainless Steel Finish	40448800

A71 Soap-/ lotion dispenser

Features

- suitable for matched design to selected kichen mixers
- projection 91 mm
- material: durable metal construction
- non-corroding outlet pipe
- filling capacity 500 ml
- dosage 2 ml
- easy to fill up from the top
- for installation in worktops up to 55 mm
- easy and save installation without tools needed
- mounting hole with 28 - 35 mm diameter needed



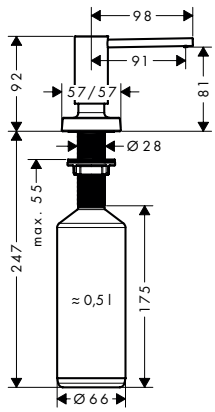

Finish	Code no.
Chrome	40468000
Matt Black	40468670
Stainless Steel Finish	40468800

Measurements within scale drawings are in mm.
Technical specifications and units of measure are subject to change.

Soap-/ lotion dispenser

Features

- type of soap: liquid soap
- filling capacity 300 ml
- contactless
- with mounting material



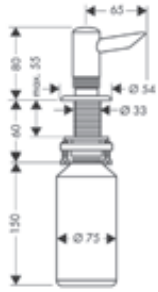

Finish	Code no.
Chrome	40418000
Stainless Steel Optic	40418800

Talis M54 F21- Shut-off valve for concealed installation

Features

- connection dimension: G ½ inclusive adapter G ¾
- clamping range: 0 - 60 mm
- diameter drill hole: 35 mm
- diameter: 48.0 mm
- device shut-off valve for installation in kitchen sinks and worktops



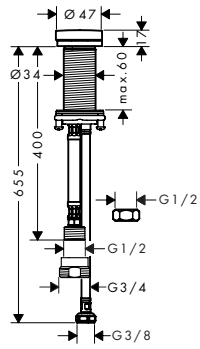

Finish	Code no.
Chrome	72841000
Matt Black	72841670
Stainless Steel Finish	72841800

Cutting boards

Features of all variants

- suitable for S51 SilicaTec sinks, S71 Stainless steel sinks

F16



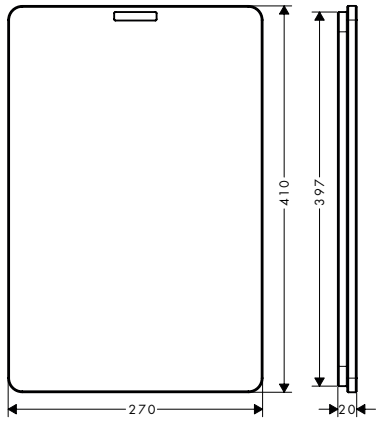

F15



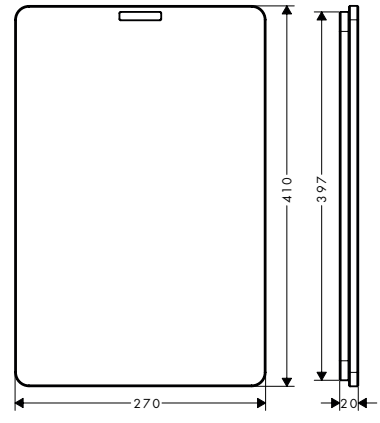

Overview variants

Version	Finish	Code no.
oak	Natural Oak	40961000
walnut	Dark Walnut	40960000

Measurements within scale drawings are in mm.
Technical specifications and units of measure are subject to change.

F14 Multifunctional strainer

Features

- ideal to clean fruits and vegetables or to pour out noodles
- suitable for S51 SilicaTec sinks, S71 Stainless steel sinks, kitchen sinks with a depth of 400 mm to 406 mm
- material: plastic



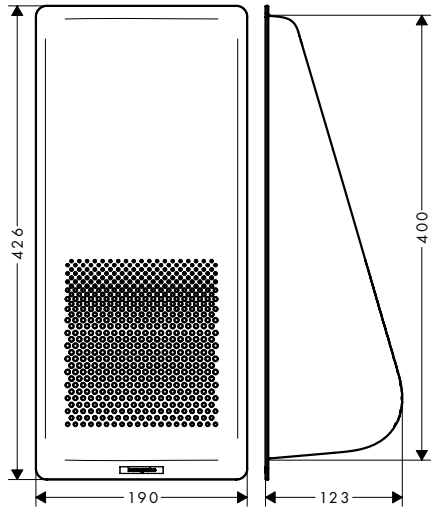

Finish	Code no.
Matt Black	40963000

F17 Mobile drainboard

Features

- perfect to unfreeze food
- for safe storage of glasses and bulky dishes
- high functionality, water can run off easily into the sink
- suitable for S51 SilicaTec sinks, S71 Stainless steel sinks
- material: plastic/stainless steel



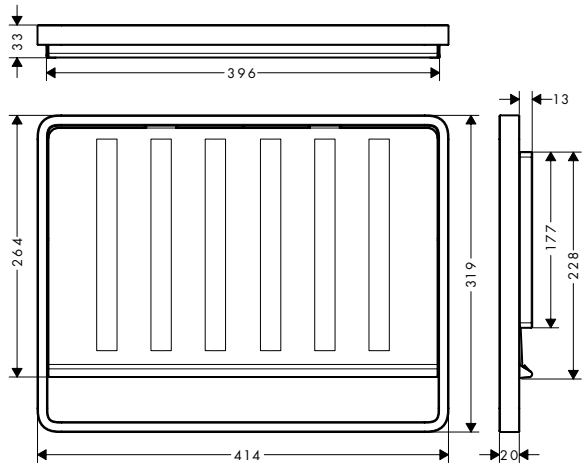

Finish	Code no.
Stainless Steel	40962800

Measurements within scale drawings are in mm.
Technical specifications and units of measure are subject to change.

Concealed installation 1 function

Ⓐ **Raindance Select S**
Shower set 120 3jet
with shower bar 90 cm
and soap dish
26631, -000

Ⓑ **ShowerSelect Comfort Q**
Thermostat for concealed installation
for 1 function
15581, -000

Basic set iBox universal 2
(not shown)
01500180

Ⓒ **FixFit**
Wall outlet Square
with non-return valve
26455, -000

Ⓓ **Staro**
Complete set waste set 90
60056, -000

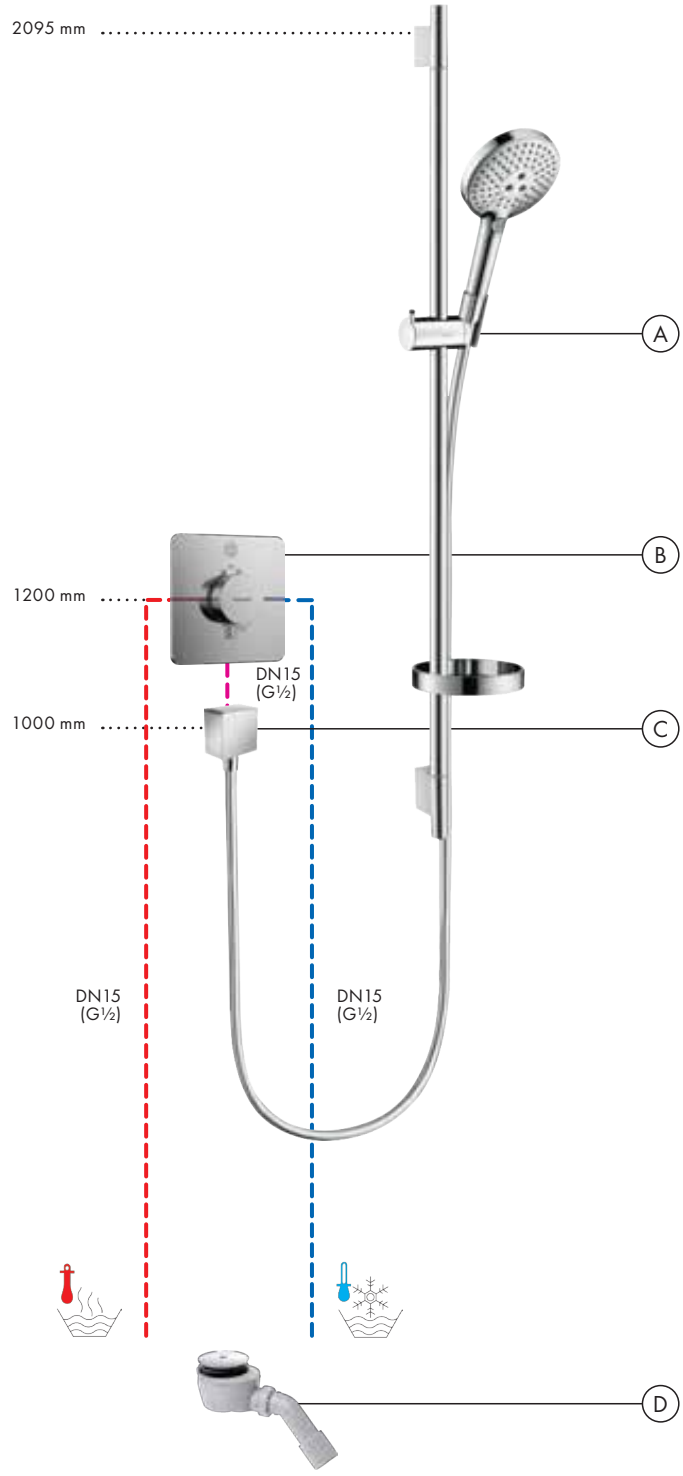

Flow diagram

Raindance Select S
Hand shower 120 3jet
26530, -000

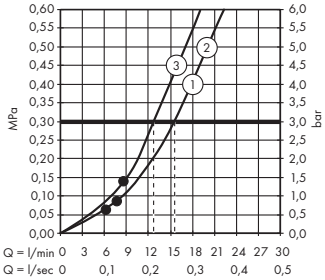

Legend
① RainAir
② Rain
③ Whirl

• denotes minimum operating pressure.

Exposed installation 1 function

Ⓐ **Pulsify Select S**
Shower set 105 3jet Relaxation
with shower bar 90 cm
24170, -000

Ⓑ **ShowerTablet Select**
Shower thermostat 400
for exposed installation
24360, -000

Ⓒ **RainDrain Flex**
Finish set shower drain 700 cuttable
56043, -000

Base set for finish sets for standard installation (not shown)
01001180

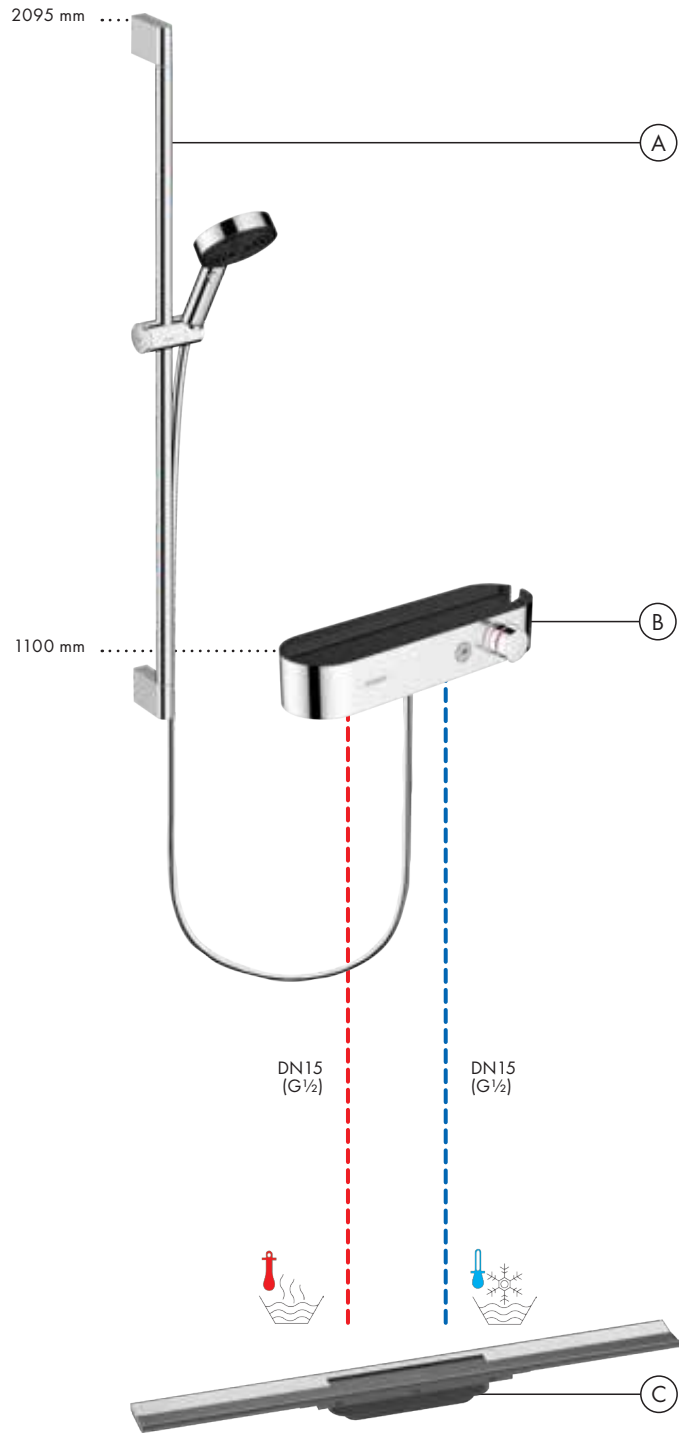

Flow diagram

Pulsify Select S
Hand shower 105 3jet Relaxation
24110, -000

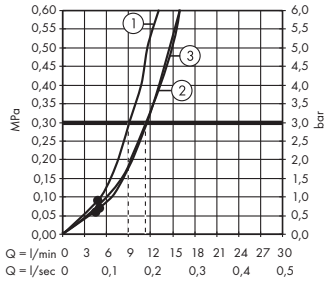

Legend
① Massage
② PowderRain
③ IntenseRain

• denotes minimum operating pressure.

Concealed installation 2 functions

Ⓐ **Rainmaker Select**
Overhead shower 460 1jet
with shower arm
24003, -400

Ⓑ **ShowerSelect Glas**
Thermostat for concealed installation
for 2 functions
15738, -400

Basic set iBox universal (not shown)
01800180

Ⓒ **Raindance Select S**
Shower holder set 120 3jet
with shower hose 160 cm
26721, -000

Ⓓ **FixFit**
Wall outlet Square
with non-return valve
26455, -000

Ⓔ **Raindrain**
Complete set waste set 90 XXL
60067, -000

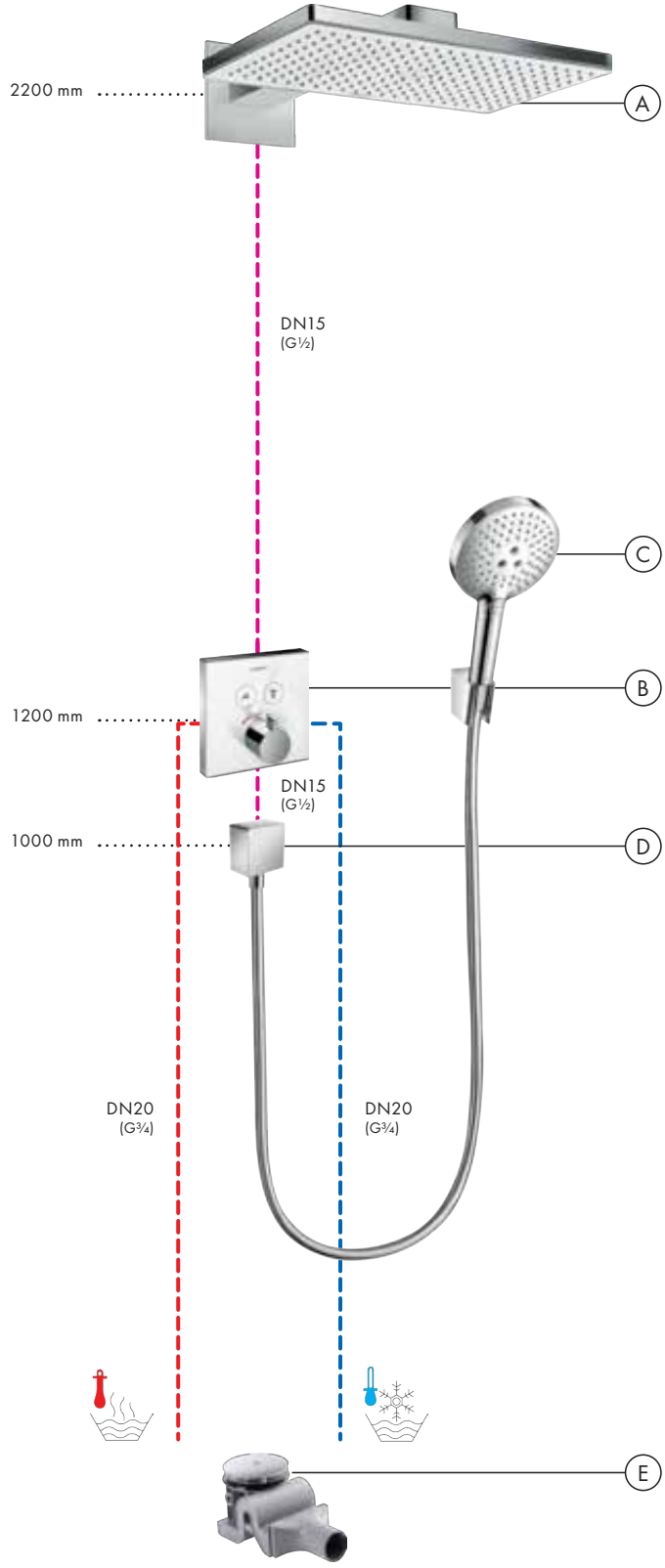

Flow diagram

Rainmaker Select
Overhead shower 460 1jet with shower arm
24003, -400

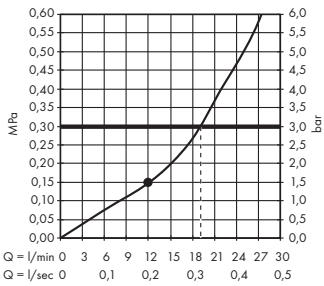

Raindance Select S
Hand shower 120 3jet
26530, -000

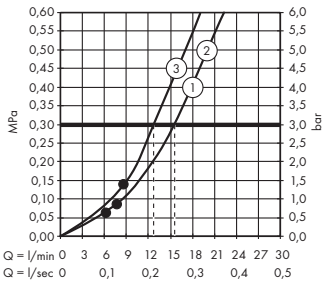

Legend
① RainAir
② Rain
③ Whirl

• denotes minimum operating pressure.

Concealed installation 2 functions

Ⓐ **Rainfinity**
Overhead shower 360 1jet
with wall connector
26230, -000

Ⓑ **Rainfinity**
Shower holder set 100 1jet
with shower hose 160 cm
26856, -000

Ⓒ **ShowerSelect Comfort E**
Thermostat for concealed installation
for 2 functions
15572, -000

Basic set iBox universal 2
(not shown)
01500180

Ⓓ **FixFit**
Wall outlet Square
with non-return valve
26455, -000

Ⓔ **RainDrain Flex**
Finish set shower drain 700 cuttable
56043, -000

Base set for finish sets for standard
installation (not shown)
01001180

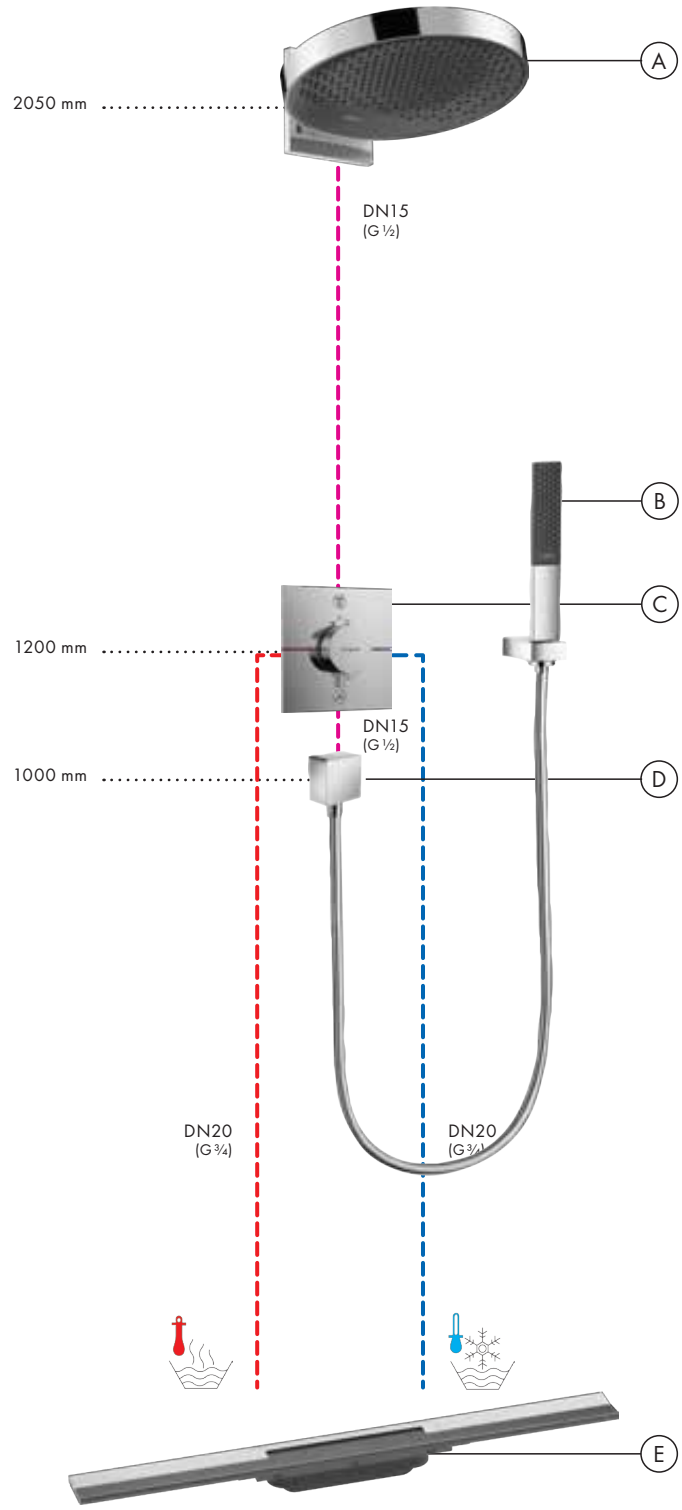

Flow diagram

Rainfinity
Overhead shower 360 1jet with wall connection
26230, -700

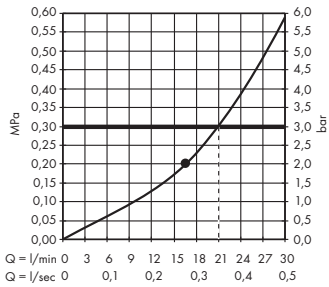

Rainfinity
Shower support set 100 1jet with shower hose 160 cm
26856, -700

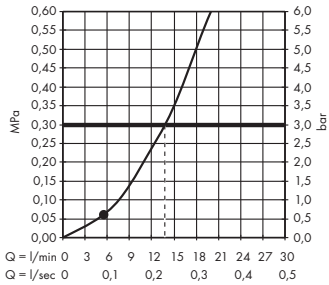

• denotes minimum operating pressure.

Concealed installation 2 functions

Ⓐ **Raindance S**
Overhead shower 240 1jet
PowderRain with shower arm
27607, -000

Ⓑ **Raindance Select S**
Shower set 120 3jet
with shower bar 110 cm right
26326, -000

Ⓒ **DuoTurn S**
Mixer for concealed installation
for 2 functions
75418, -000

Basic set iBox universal 2
(not shown)
01500180

Ⓓ **FixFit**
Wall outlet S with non-return valve
and synthetic connection angle
26453, -000

Ⓔ **Unica**
Foot support Comfort
26329, -000

Ⓕ **Raindrain**
Complete set waste set 90 XXL
60067, -000

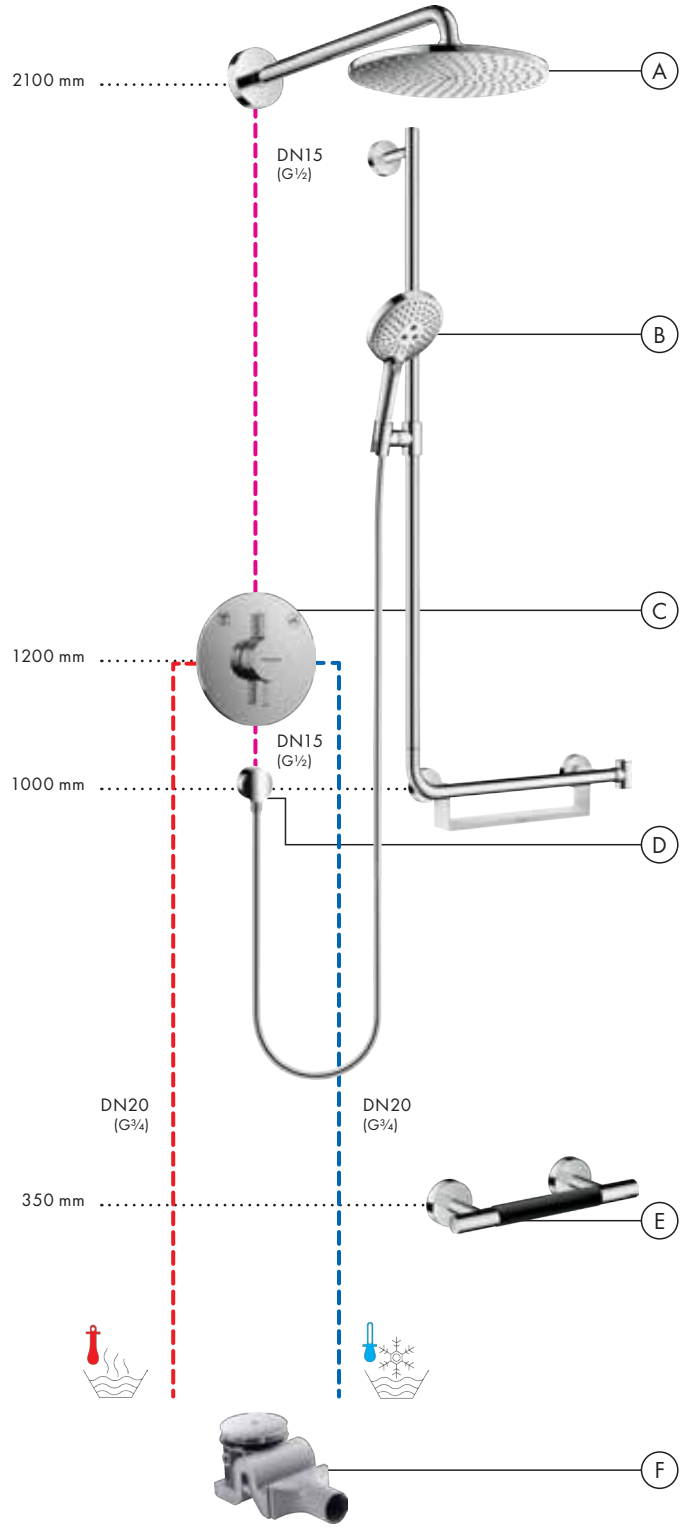

Flow diagram

Raindance S
Overhead shower 240 1jet PowderRain with shower arm
27607, -000

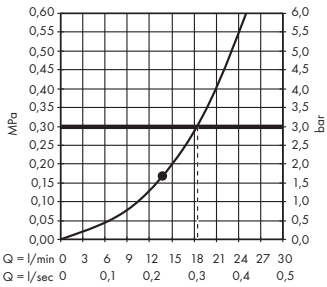

Raindance Select S
Hand shower 120 3jet
26530, -000

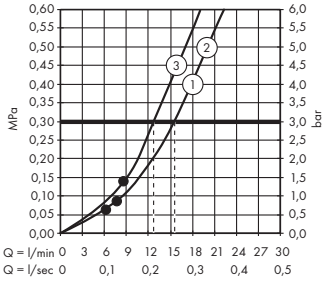

Legend
① RainAir
② Rain
③ Whirl

• denotes minimum operating pressure.

Exposed/concealed installation 2 functions

Ⓐ **Rainmaker Select**
Overhead shower 460 1jet
with shower arm
24003, -400

Ⓑ **ShowerTablet Select**
Thermostat 700 universal
for exposed installation for 2 functions
13184, -400

Ⓒ **Raindance Select S**
Hand shower 120 3jet
26530, -400

Shower holder Porter S
28331, -000

Ⓓ **Isiflex**
Shower hose 160 cm
28276, -000

Ⓔ **RainDrain Flex**
Finish set shower drain 700 cuttable
56043, -000

Base set for finish sets for standard
installation (not shown)
01001180

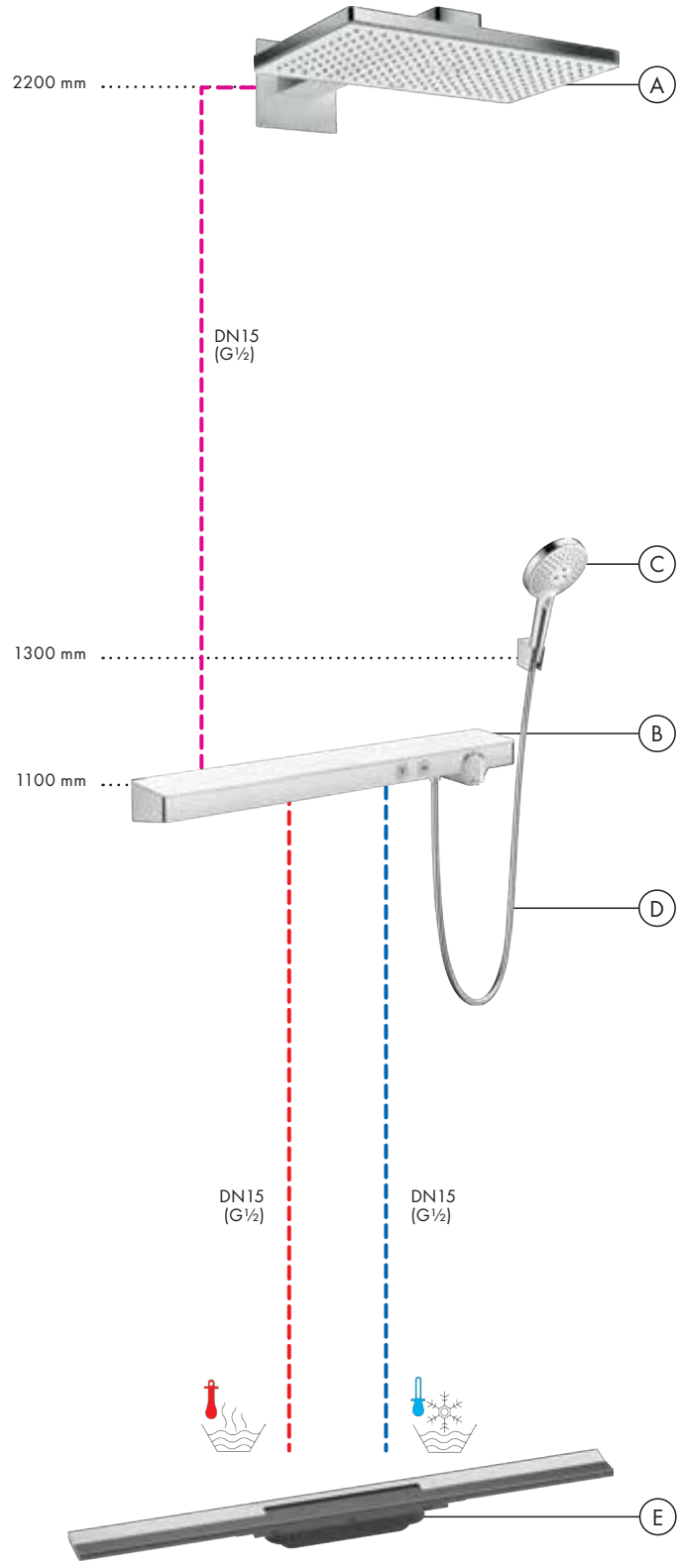

Flow diagram

Rainmaker Select
Overhead shower 460 1jet with shower arm
24003, -400

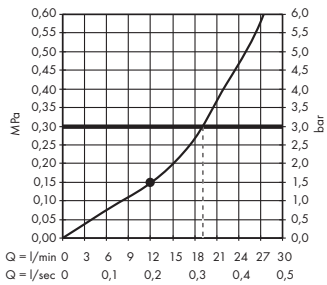

Raindance Select S
Hand shower 120 3jet
26530, -400

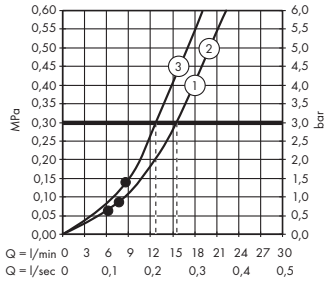

Legend
① RainAir
② Rain
③ Whirl

• denotes minimum operating pressure.

Concealed installation 3 functions

Ⓐ **Raindance Rainfall**
Overhead shower 180 2jet
28433, -000

Basic set iBox universal (not shown)
01800180

Ⓑ **Raindance Select S**
Hand shower 120 3jet
26530, -400

Shower holder Porter S
28331, -000

Isiflex
Shower hose 160 cm
28276, -000

Ⓒ Shut-off/ diverter valve S Trio/ Quattro for concealed installation
15932, -000

Basic set for Quattro four-way diverter valve for concealed installation (not shown)
15930180

Ⓓ Shut-off valve S for concealed installation
15972, -000

Basic set 130 l/min for shut-off valve for concealed installation spindle (not shown)
15970180

Ⓔ **Ecostat S**
Thermostat HighFlow for concealed installation
15756, -000

Basic set iBox universal (not shown)
01800180

Ⓕ **FixFit**
Wall outlet S with non-return valve and synthetic connection angle
26453, -000

Ⓖ **Raindrain**
Complete set waste set 90 XXL
60067, -000

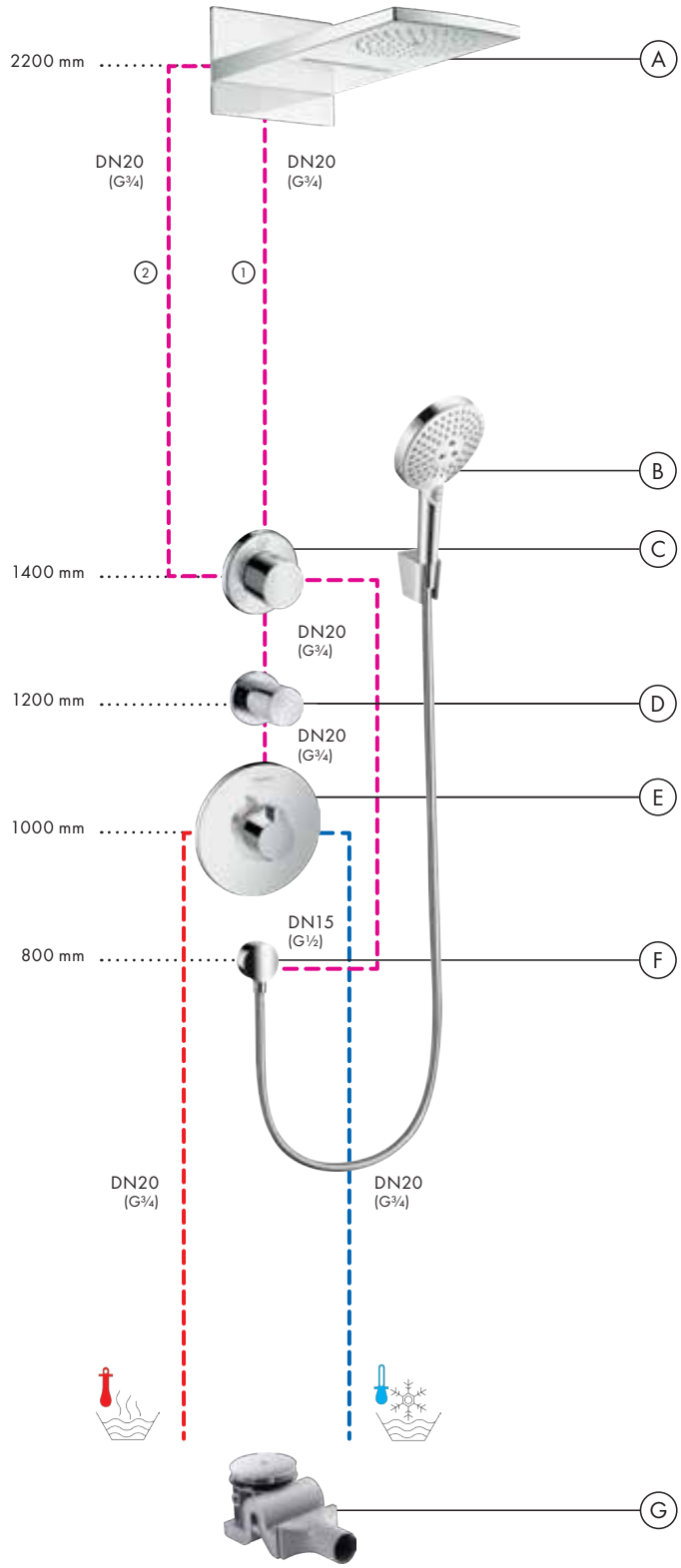

Flow diagram

Raindance Rainfall
Overhead shower 180 2jet
28433, -000

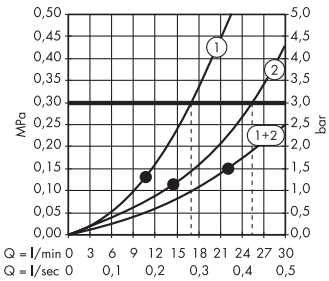

Legend
① RainAir
② RainFlow

Raindance Select S
Hand shower 120 3jet
26530, -400

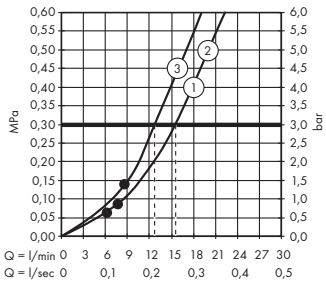

Legend
① RainAir
② Rain
③ Whirl

• denotes minimum operating pressure.

Concealed installation 3 functions

Ⓐ **Pulsify S**
Overhead shower 260 2jet
with wall connector
24150, -000

Basic set iBox universal (not shown)
01800180

Ⓑ **Pulsify Select S**
Shower set 105 3jet Relaxation
with shower bar 90 cm
24170, -000

FixFit
Wall outlet Square
with non-return valve
26455, -000

Ⓒ **ShowerSelect**
Valve for concealed installation
for 3 functions
15764, -000

Basic set iBox universal (not shown)
01800180

Ⓓ **ShowerSelect**
Thermostat HighFlow
for concealed installation
15760, -000

Basic set iBox universal (not shown)
01800180

Ⓔ **RainDrain Flex**
Finish set shower drain 700 cuttable
56043, -000

Base set for finish sets for standard
installation (not shown)
01001180

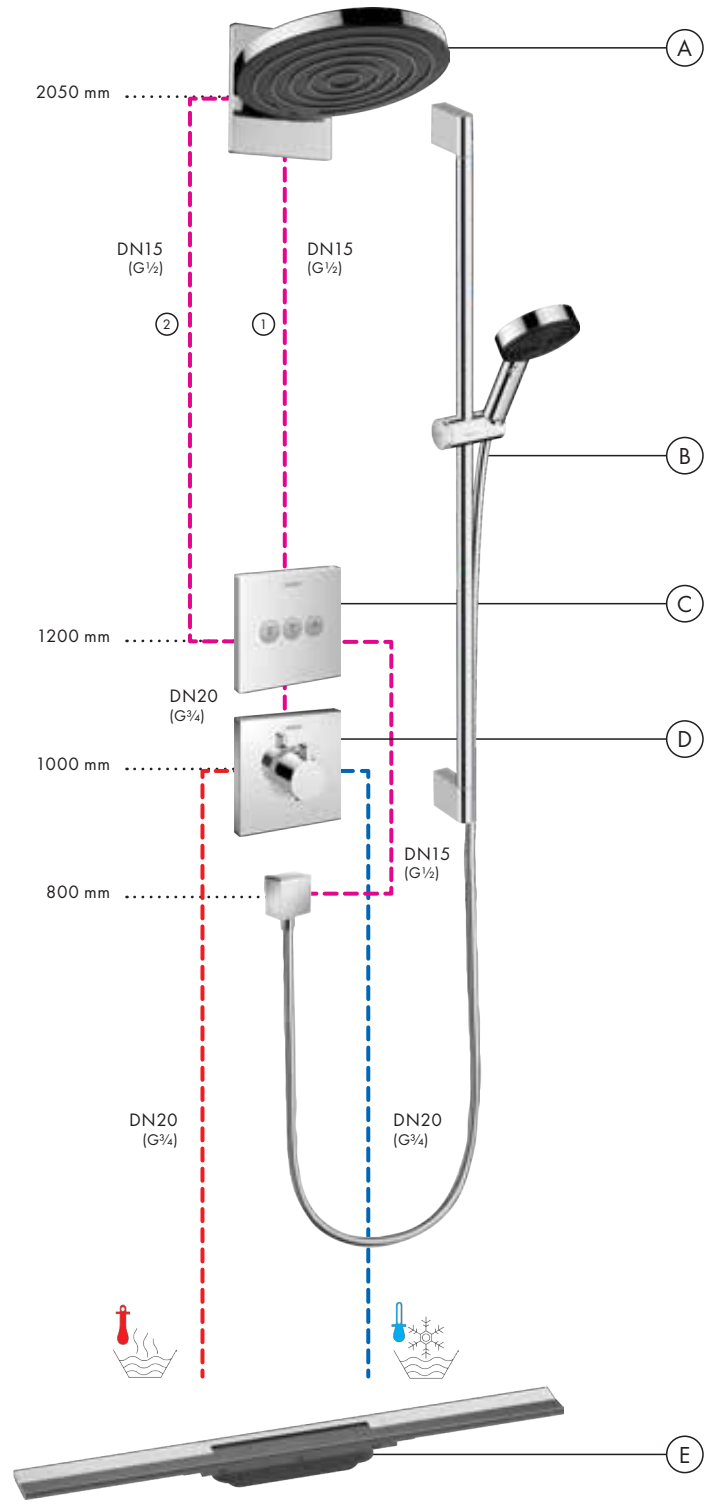

Flow diagram

Pulsify S
Overhead shower 260 2jet with wall connection
24150, -000

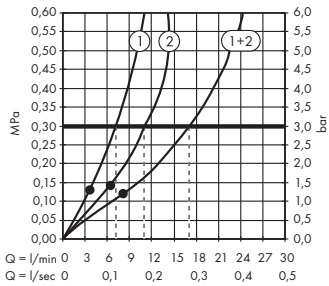

Legend
① Intense PowderRain
② PowderRain

Pulsify Select S
Hand shower 105 3jet Relaxation
24110, -000

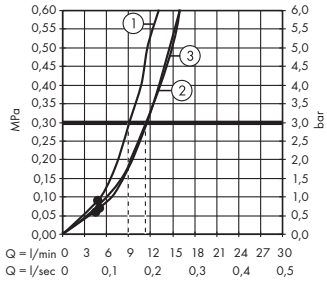

Legend
① Massage
② PowderRain
③ IntenseRain

• denotes minimum operating pressure.

Concealed installation 3 functions

Ⓐ **Rainmaker Select**
Overhead shower 460 2jet
with shower arm
24005, -400

Basic set iBox universal (not shown)
01800180

Ⓑ **Raindance Select S**
Hand shower 120 3jet
26530, -400

Ⓒ **RainSelect**
Thermostat for concealed installation
for 3 functions with integrated shower
holder
15356, -400

Basic set for 3 functions (not shown)
15311180

Ⓓ **Isiflex**
Shower hose 125 cm
28272, -000

Ⓔ **Raindrain**
Complete set waste set 90 XXL
60067, -000

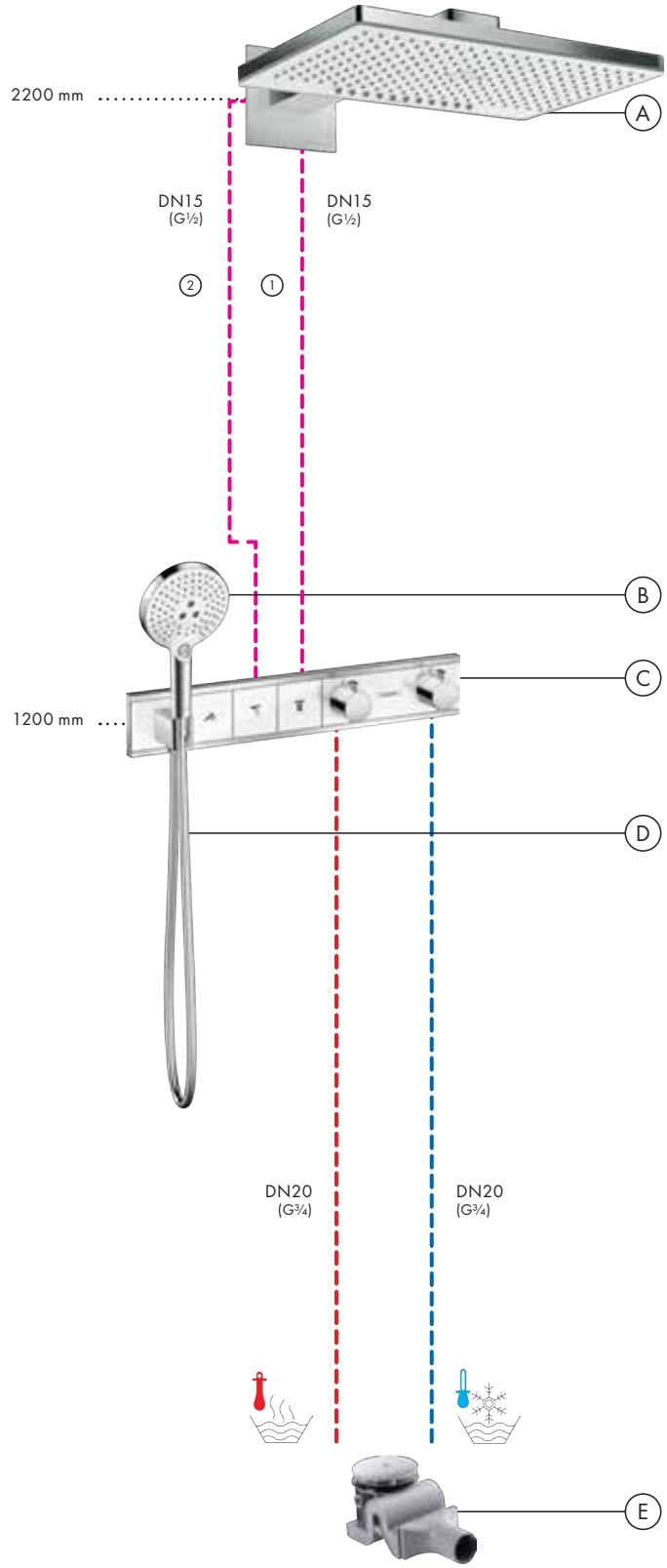

Flow diagram

Rainmaker Select
Overhead shower 460 2jet mit Brausearm
24005, -400

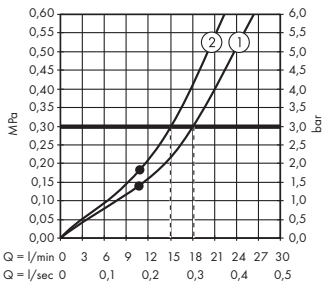

Legend
① Rain XL
② RainStream

Raindance Select S
Hand shower 120 3jet
26530, -400

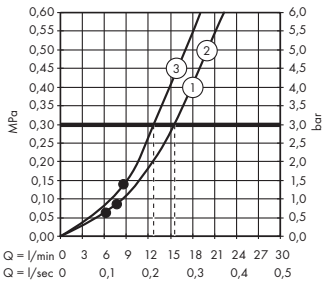

Legend
① RainAir
② Rain
③ Whirl

• denotes minimum operating pressure.

Concealed installation 3 functions

Ⓐ **Rainfinity**
Overhead shower 360 1jet
26231, -700

Ceiling connector S 10 cm
27393, -700

Ⓑ **Rainfinity**
Shoulder shower 500 1jet
with shower shelf
26243, -700

Ⓒ **Rainfinity**
Hand shower 130 3jet
26864, -700

Rainfinity
Wall outlet Porter 500
with shower holder
and shower shelf left
26843, -700

Ⓓ **RainSelect**
Thermostat for concealed installation
for 3 functions
15381, -700

Basic set for 3 functions (not shown)
15311180

Ⓔ **Isiflex**
Shower hose 125 cm
28272, -700

Ⓕ **Raindrain**
Complete set waste set 90 XXL
60067, -000

Flow diagram

Rainfinity
Overhead shower 360 1jet
26231, -700

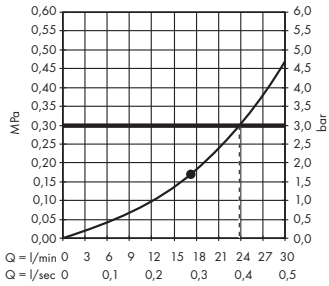

Rainfinity
Shoulder shower 500 1jet mit Ablage
26243, -700

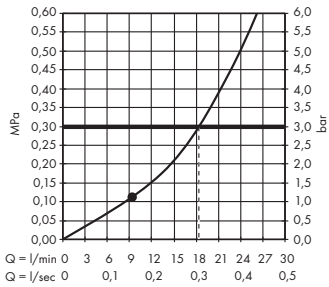

Rainfinity
Hand shower 130 3jet
26864, -700

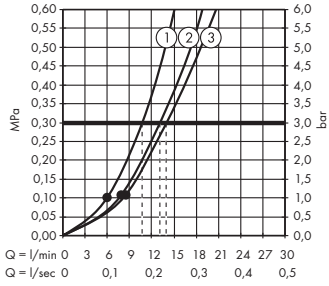

Legend

① MonoRain
② Intense PowderRain
③ PowderRain

• denotes minimum operating pressure.

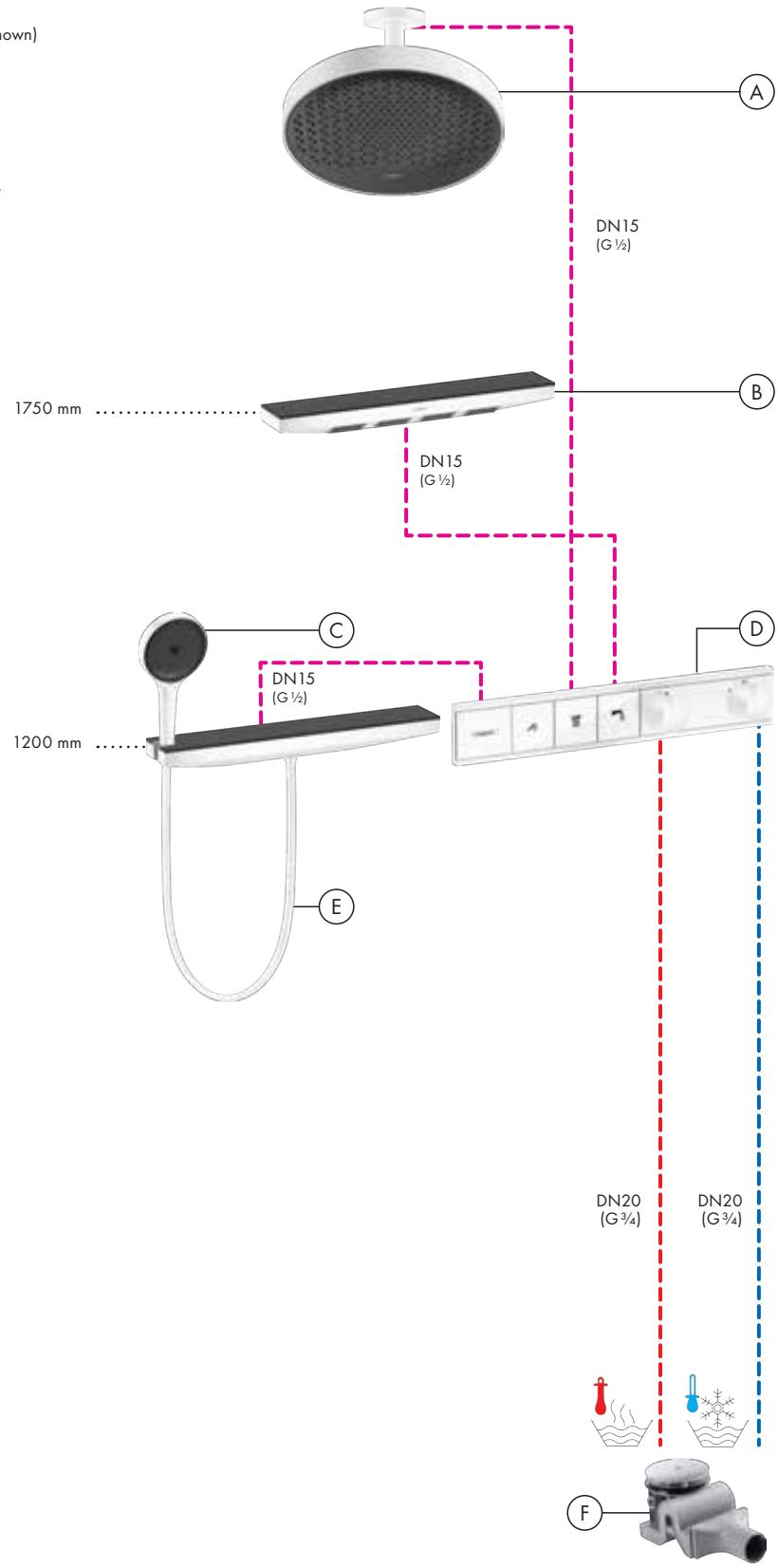

Concealed installation 4 functions

Ⓐ **Rainmaker Select**
Overhead shower 460 3jet
with shower arm
24007, -600

Basic set iBox universal (not shown)
01800180

Ⓑ **Raindance Select S**
Hand shower 120 3jet
26530, -000

Isiflex
Shower hose 125 cm
28272, -000

Ⓒ **RainSelect**
Thermostat for concealed installation for 4 functions with integrated shower holder
15357, -600

Basic set for 4 functions (not shown)
15312180

Ⓓ **Raindrain**
Complete set waste set 90 XXL
60067, -000

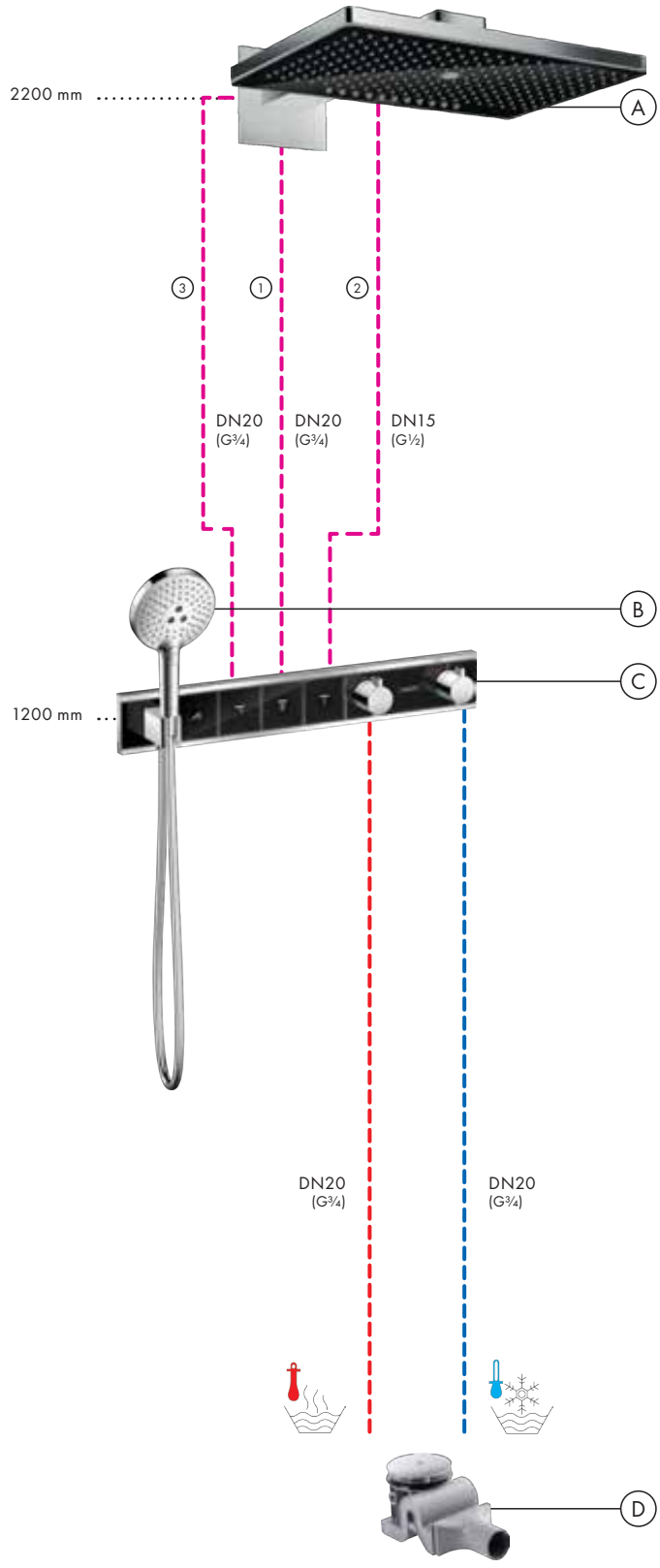

Flow diagram

Rainmaker Select
Overhead shower 460 3jet with shower arm
24007, -600

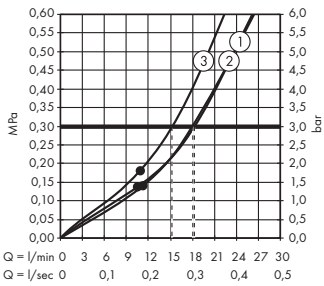

Legend
① RainAir
② RainStream
③ MonoRain

Raindance Select S
Hand shower 120 3jet
26530, -000

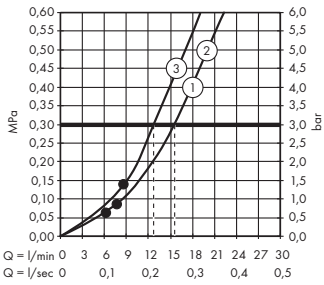

Legend
① RainAir
② Rain
③ Whirl

• denotes minimum operating pressure.

Concealed installation 4 functions

Ⓐ **Rainfinity**
Overhead shower 360 3jet
with wall connector
26234, -700

Basic set iBox universal (not shown)
01800180

Ⓑ **Rainfinity**
Hand shower 130 3jet
26864, -700

FixFit
Wall outlet Porter 500
with shower holder
and shower shelf left
26843, -700

Isiflex
Shower hose 125 cm
28272, -700

Ⓒ **RainSelect**
Thermostat for concealed installation
for 4 functions
15382, -700

Basic set for 4 functions (not shown)
15312180

Ⓓ **Raindrain**
Complete set waste set 90 XXL
60067, -000

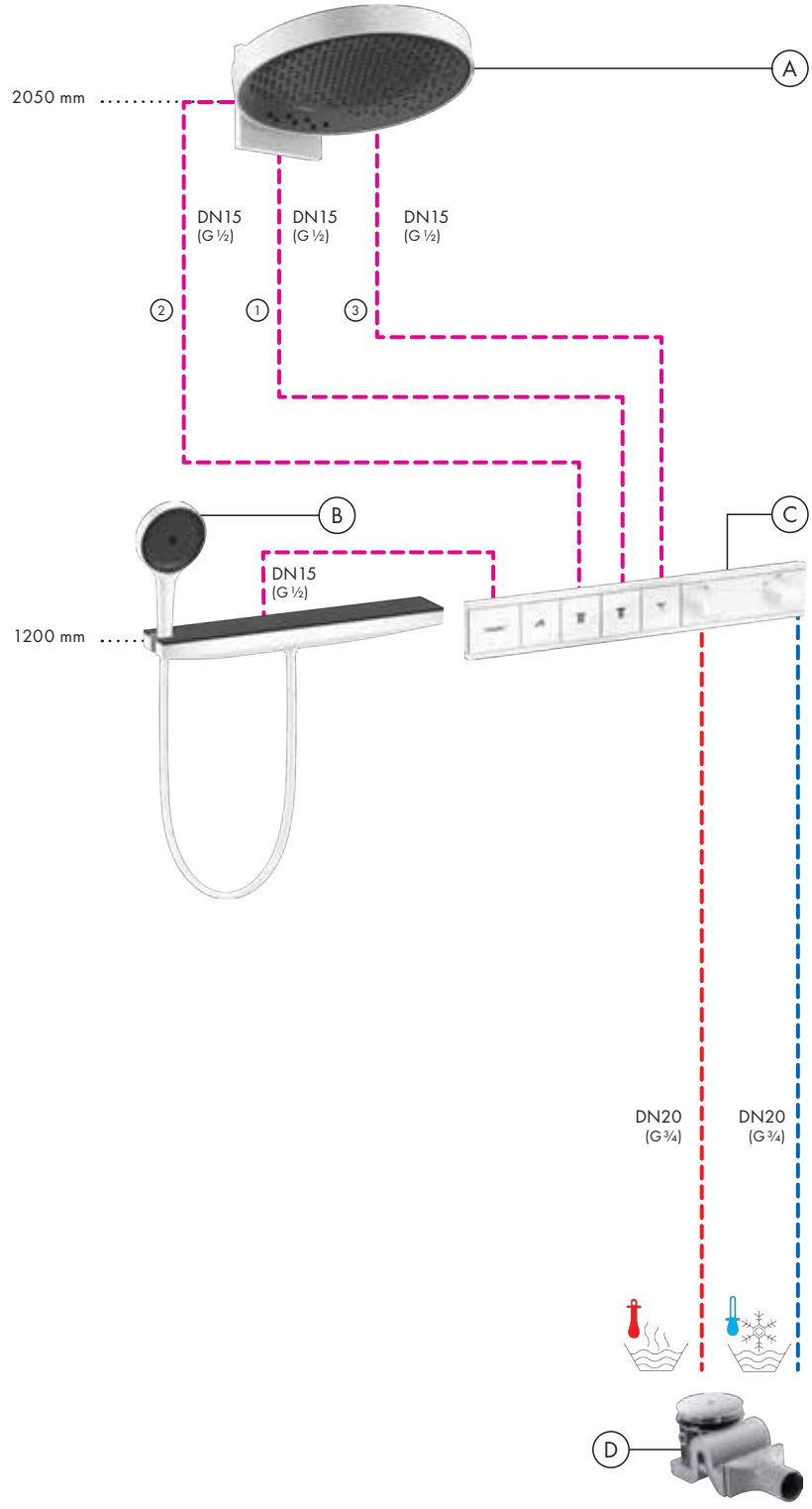

Flow diagram

Rainfinity
Overhead shower 360 3jet with wall connection
26234, -700

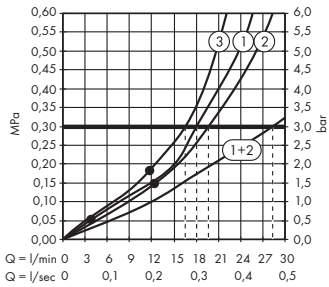

Legend
① Intense PowderRain
② PowderRain
③ RainStream

Rainfinity
Hand shower 130 3jet
26864, -700

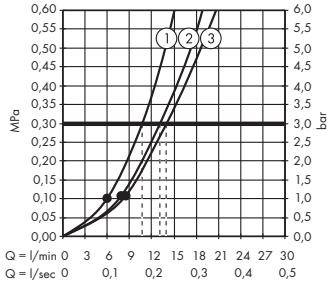

Legend
① MonoRain
② Intense PowderRain
③ PowderRain

• denotes minimum operating pressure.

Concealed installation 4 functions

Ⓐ **Rainmaker Select**
Overhead shower 580 3jet
24001, -400

Basic set iBox universal (not shown)
01800180

Ⓑ **Raindance Select S**
Hand shower 120 3jet
26530, -400

Shower holder Porter S
28331, -000

Isiflex
Shower hose 160 cm
28276, -000

Ⓒ **ShowerSelect Glas**
Valve for concealed installation
for 3 functions
15736, -400

Basic set iBox universal (not shown)
01800180

Ⓓ **ShowerSelect Glas**
Thermostat HighFlow for concealed
installation for 1 function
and additional outlet
15735, -400

Basic set iBox universal (not shown)
01800180

Ⓔ **FixFit**
Wall outlet Square
with non-return valve
26455, -000

Ⓕ **Raindrain**
Complete set waste set 90 XXL
60067, -000

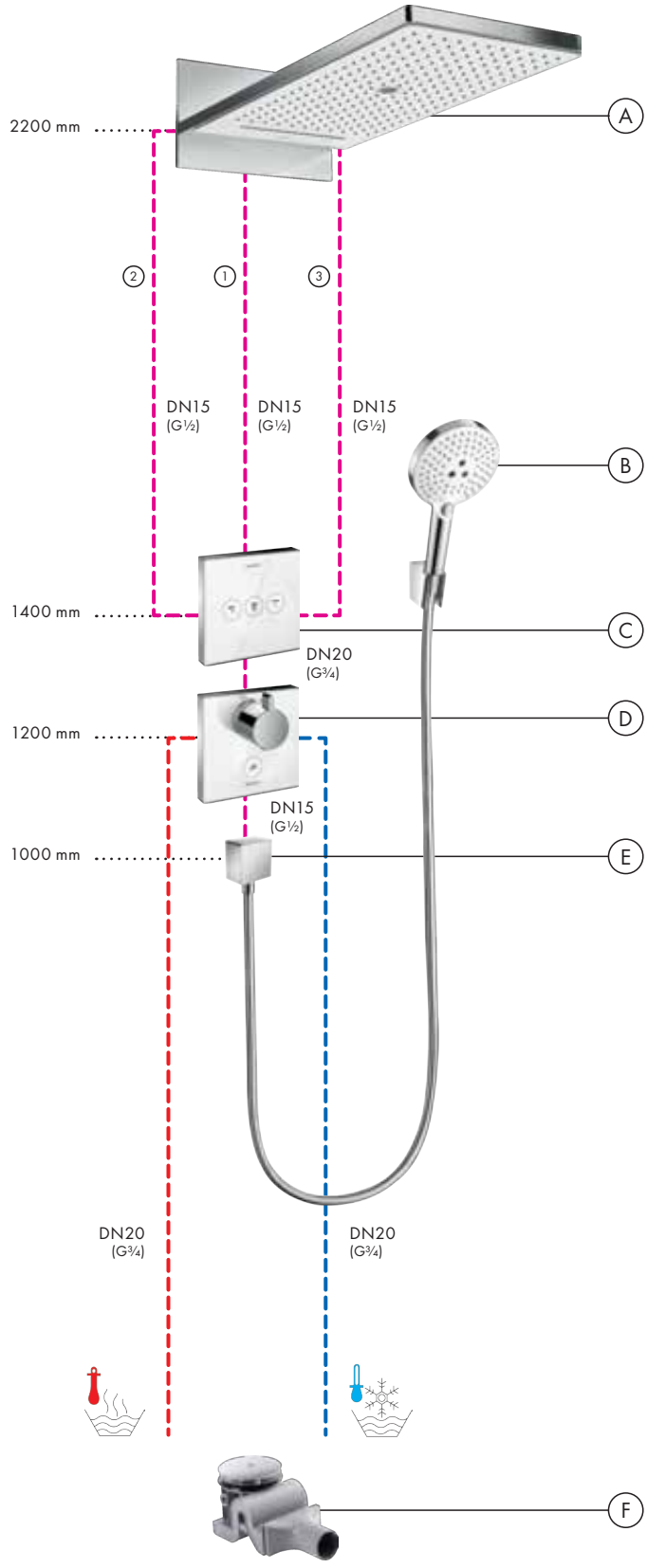

Flow diagram

Rainmaker Select
Overhead shower 580 3jet with wall connection
24001, -400

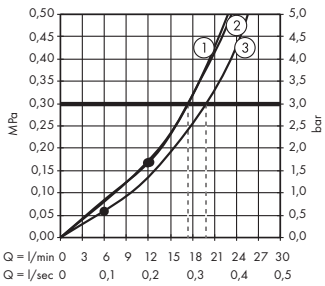

Legend
1. Rain XL
2. RainFlow
3. Mono

Raindance Select S
Hand shower 120 3jet
26530, -400

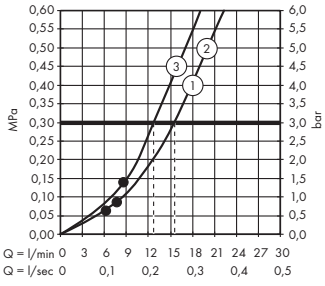

Legend
1. RainAir
2. Rain
3. Whirl

• denotes minimum operating pressure.

Concealed installation 5 functions

Ⓐ **Rainfinity**
Overhead shower 360 3jet
with wall connector
26234, -700

Basic set iBox universal (not shown)
01800180

Ⓑ **Rainfinity**
Shoulder shower 500 1jet
with shower shelf
26243, -700

Ⓒ **Rainfinity**
Hand shower 130 3jet
26864, -700

FixFit
Wall outlet Porter 500
with shower holder
and shower shelf left
26843, -700

Isiflex
Shower hose 125 cm
28272, -700

Ⓓ **RainSelect**
Thermostat for concealed installation
for 5 functions
15384, -700

Basic set for 5 functions (not shown)
15313180

Ⓔ **Raindrain**
Complete set waste set 90 XXL
60067, -000

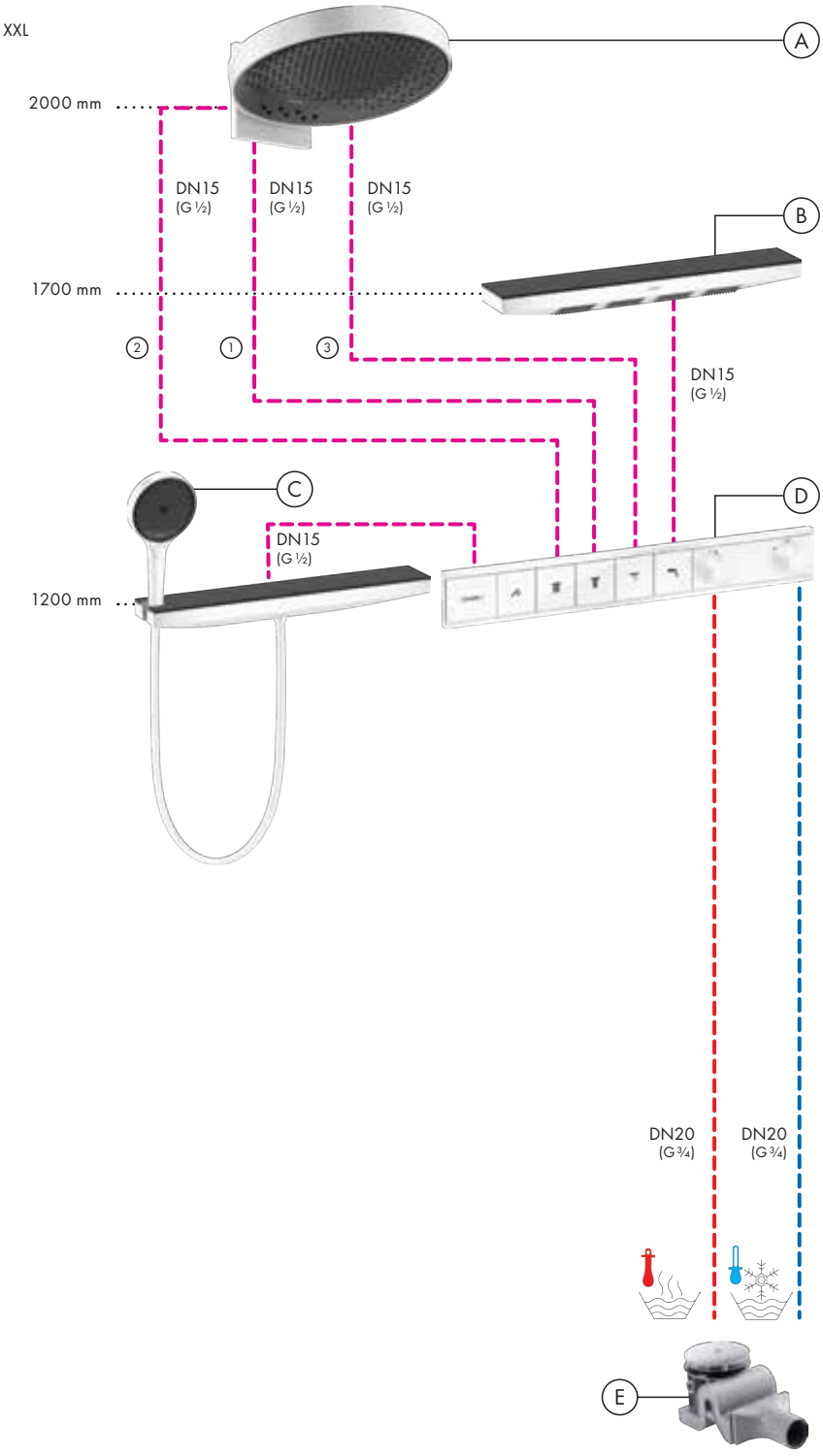

Rainfinity
Shoulder shower 500 1jet with shower shelf
26243, -700

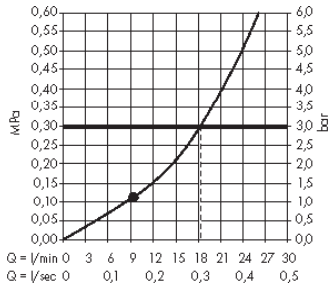

Flow diagram

Rainfinity
Overhead shower 360 3jet with wall connection
26234, -700

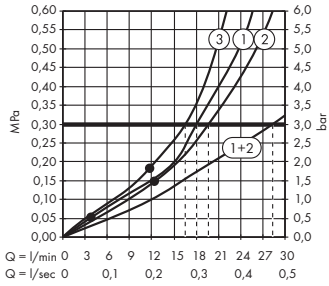

Legend
① Intense PowderRain
② PowderRain
③ RainStream

Flow diagram

Rainfinity
Hand shower 130 3jet
26864, -700

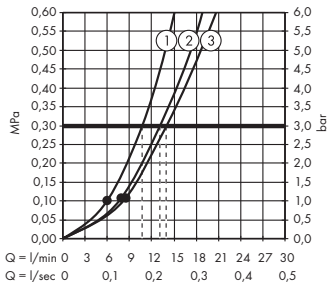

Legend
① MonoRain
② Intense PowderRain
③ PowderRain

• denotes minimum operating pressure.

Round tube Showerpipes – flexible in height

Regardless of the height of the room and the water connections, a number of round tube Showerpipes can always be placed in the optimum position. The round tube can only be cut to the right length on the underside, if needed, so individual customer requirements can also be met. You will find additional information in the installation manual.

Room height A

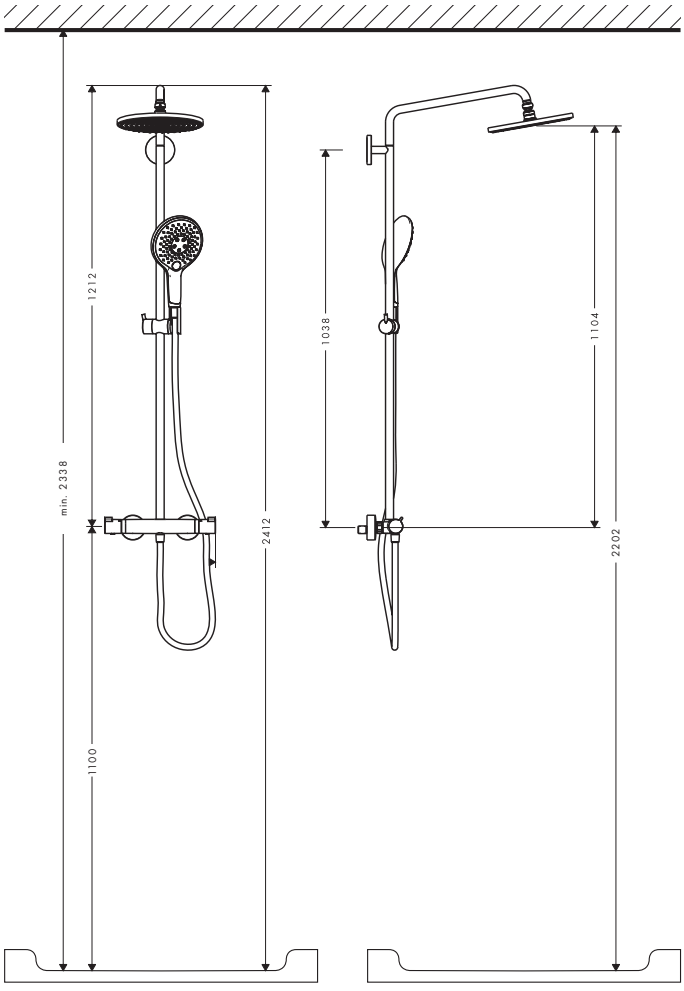

Room height B

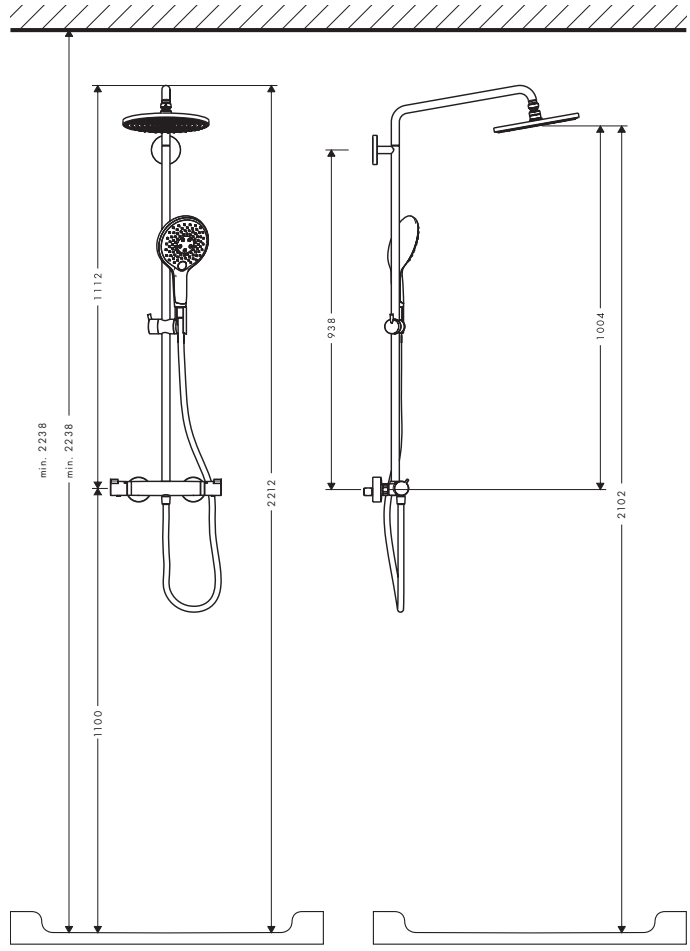

All dimensions in mm

Versatile positioning

The swivelling shower arm makes the Showerpipes extremely versatile – perfect for use in any bath tub or shower situation.

Bath tub installation

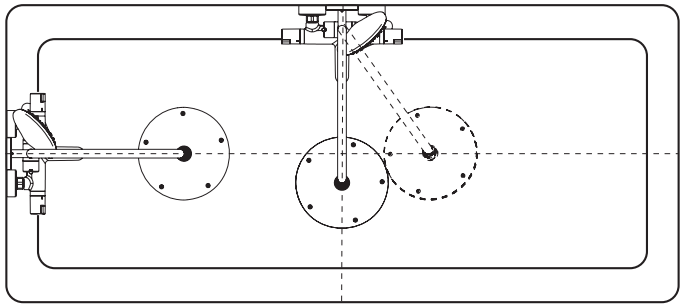

Showerpipes can easily be installed on the front or long side of the bath tub, according to the positions of the water connections. The overhead shower can also be aligned individually.

Shower installation

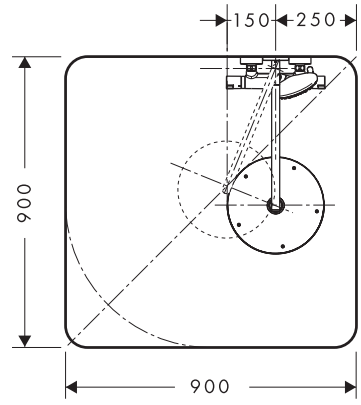

Often, the existing water connections are not positioned in the middle of a shower. Thanks to the swivelling shower arm, the overhead shower can still be placed in the middle of the shower after installation.

All dimensions in mm

Showerpipe exposed installation

Ⓐ **Pulsify S**
Showerpipe 260 1jet
with ShowerTablet Select 400
24220, -000

Ⓑ **RainDrain Flex**
Finish set shower drain 700 cuttable
56043, -000

Base set for finish sets for standard installation (not shown)
01001180

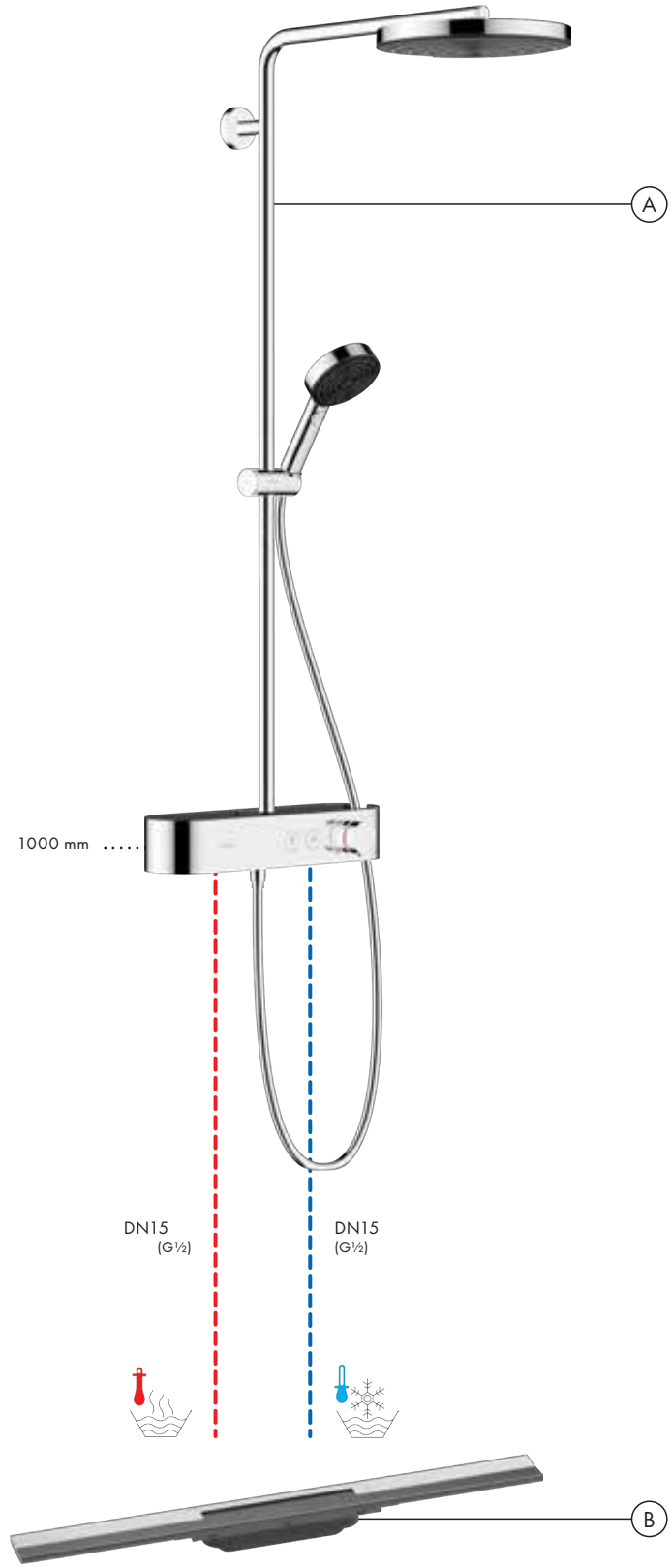

Flow diagram

Pulsify S
Showerpipe 260 1jet with ShowerTablet Select 400
24220, -000

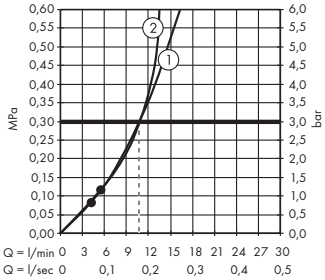

Legend

① Hand shower
② Overhead shower

• denotes minimum operating pressure.

Showerpipe concealed installation

Ⓐ **Rainfinity**
Showerpipe 360 1jet for concealed installation
26842, -700

Basic set for showerpipe 360 1jet for concealed installation
26840180

Ⓑ **RainSelect**
Thermostat for concealed installation for 2 functions
15380, -700

Basic set for 2 functions (not shown)
15310180

Ⓒ **Raindrain**
Complete set waste set 90 XXL
60067, -000

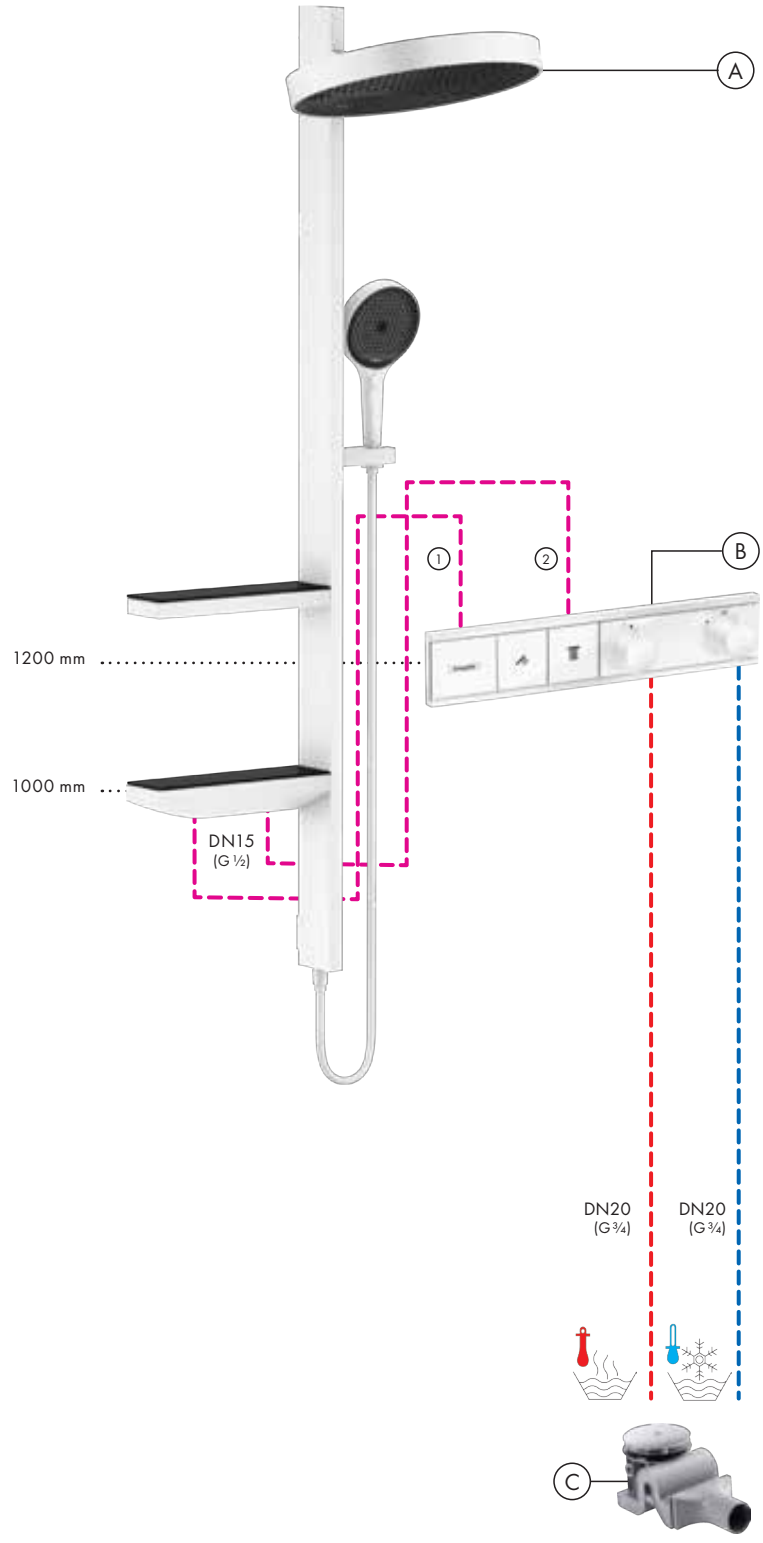

Flow diagram

Rainfinity
Showerpipe 360 1jet Unterputz
26842, -700

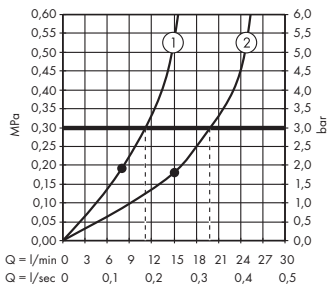

Legend

① Hand shower
② Overhead shower

• denotes minimum operating pressure.

Bath tub exposed installation

Ⓐ **ShowerTablet Select**
Bath thermostat 700 for exposed installation# 13183, -000

Ⓑ **Raindance Select S**
Hand shower 120 3jet
26530, -000

Shower holder Porter S
28331, -000

Isiflex
Shower hose 125 cm
28272, -000

Ⓒ **Flexaplus S**
Complete set waste and overflow set for standard bath tubs
58150, -000

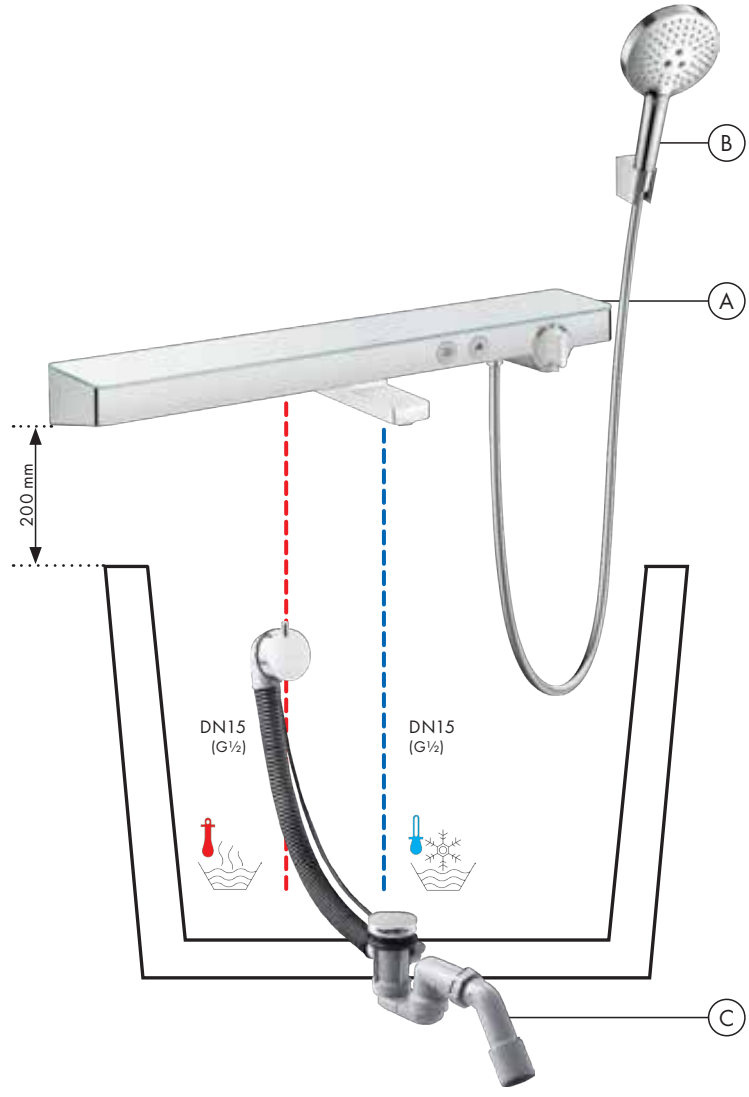

Flow diagram

ShowerTablet Select
Wannenthermostat 700 Aufputz
13183, -000

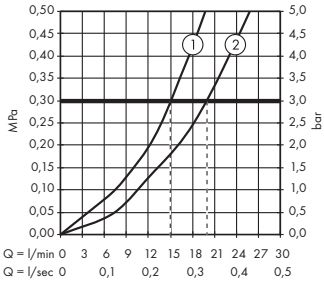

Legend
1. Shower outflow with 1-B resistance
2. Bath tub outflow

Doorstroomdiagram
Raindance Select S
Hand shower 120 3jet
26530, -000

Pulsify Select S
Hand shower 105 3jet Relaxation
24110, -000

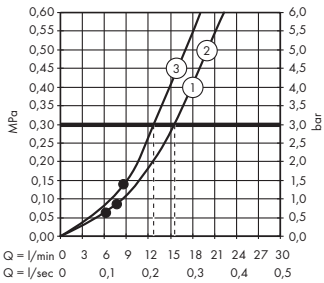

Legend
1. Rain Air
2. Rain Massage
3. Whirl PowderRain
3. IntenseRain

vanaf • wordt functioneren gegarandeerd
• denotes minimum operating pressure.

Bath tub exposed installation

Ⓐ **ShowerTablet Select**
Bath thermostat 400
for exposed installation
24340, -000

Ⓑ **Pulsify Select S**
Hand shower 105 3jet Relaxation
24110, -000

Isiflex
Shower hose 125 cm
28272, -000

Ⓒ **Flexaplus S**
Complete set waste
and overflow set
for standard bath tubs
58150, -000

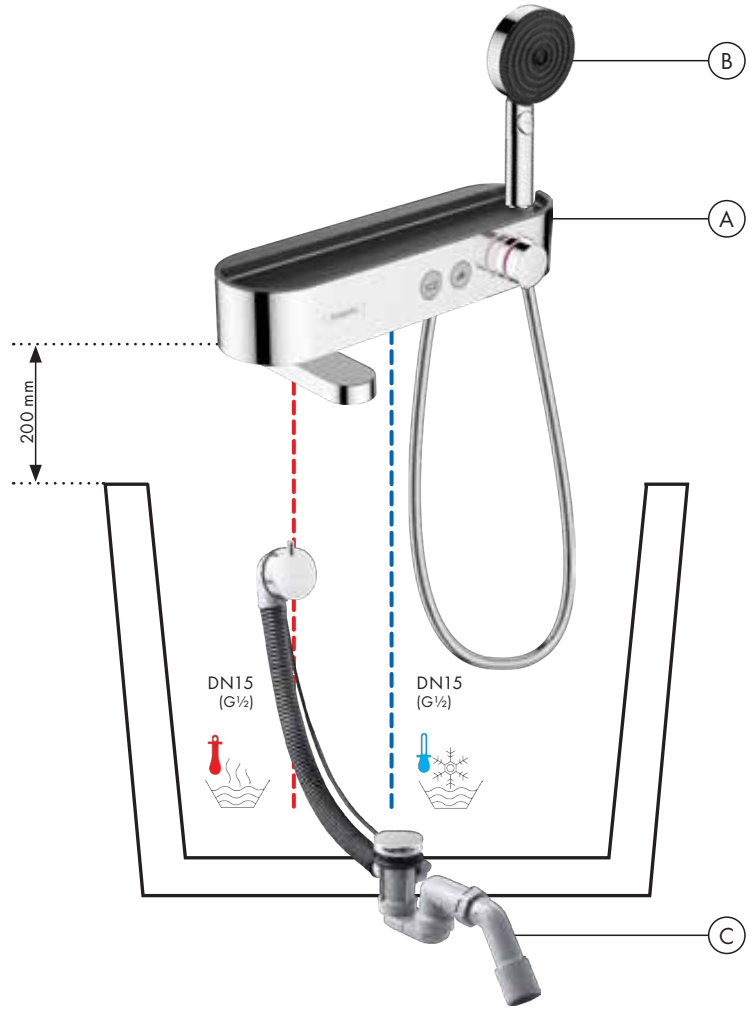

Flow diagram

Doorstroomdiagram
Pulsify Select S
Raindance Select E
Hand shower 105 3jet Relaxation
Handdouche 120 3jet
24110, -000
26520, -000

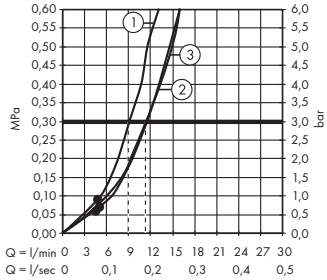

Legend
Legenda
1 Massage
2 PowderRain
3 IntenseRain

1 RainAir
2 Rain
3 Whirl

vanaf • wordt functioneren gegarandeerd

• denotes minimum operating pressure.

Bath tub rim concealed installation

Ⓐ **Metropol**
Single lever bath mixer for concealed installation with lever handle and integrated security combination according to EN1717
for iBox universal
32546, -000

Basic set iBox universal (not shown)
01800180

Ⓑ **sBox**
Finish set square
28010, -000

Rim and tile mounted bath basic set
13560180

Ⓒ **Raindance Select E**
Hand shower 120 3jet
26520, -000

Ⓓ **Exafill S**
Complete set bath filler, waste and overflow set
for standard bath tubs
58113, -000

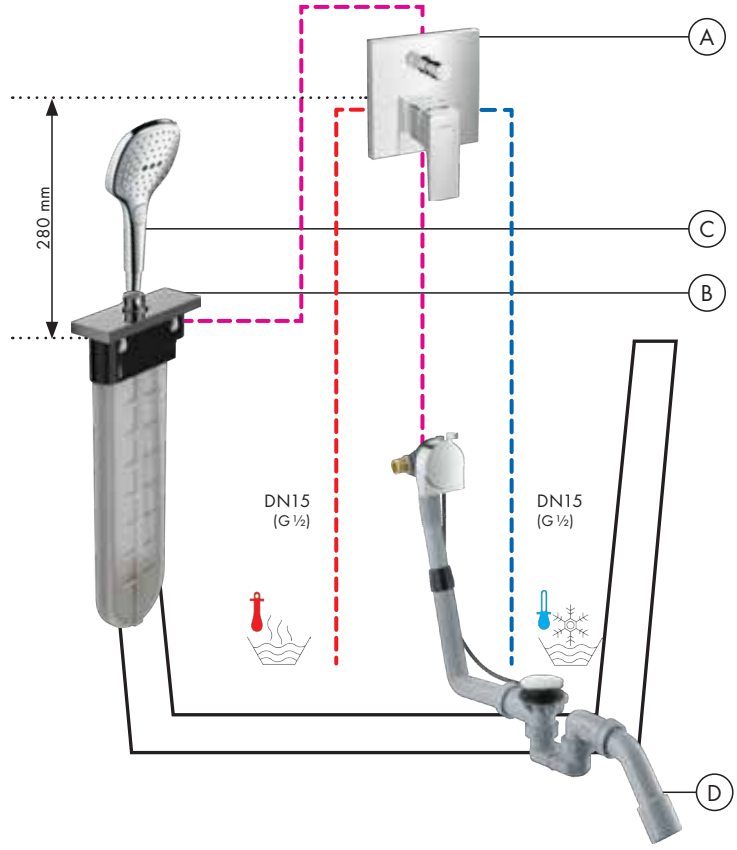

Flow diagram

Raindance Select E
Hand shower 120 3jet
26520, -000

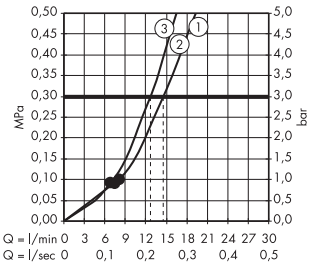

Legend
① RainAir
② Rain
③ Whirl

• denotes minimum operating pressure.

Tile mounted concealed installation

Ⓐ **Metropol**
Single lever bath mixer for concealed installation with lever handle and integrated security combination according to EN1717
for iBox universal
32546, -000

Basic set iBox universal (not shown)
01800180

Ⓑ **sBox**
Finish set square
28010, -000

Rim and tile mounted bath basic set
13560180

Ⓒ **Raindance Select E**
Hand shower 120 3jet
26520, -000

Ⓓ **Exafill S**
Complete set bath filler, waste and overflow set
for standard bath tubs
58113, -000

Ⓔ Installation plate
for tile mounted installation
28016, -000

Ⓕ Mounting angle set
for installation plate
for tile mounted installation
28021, -000

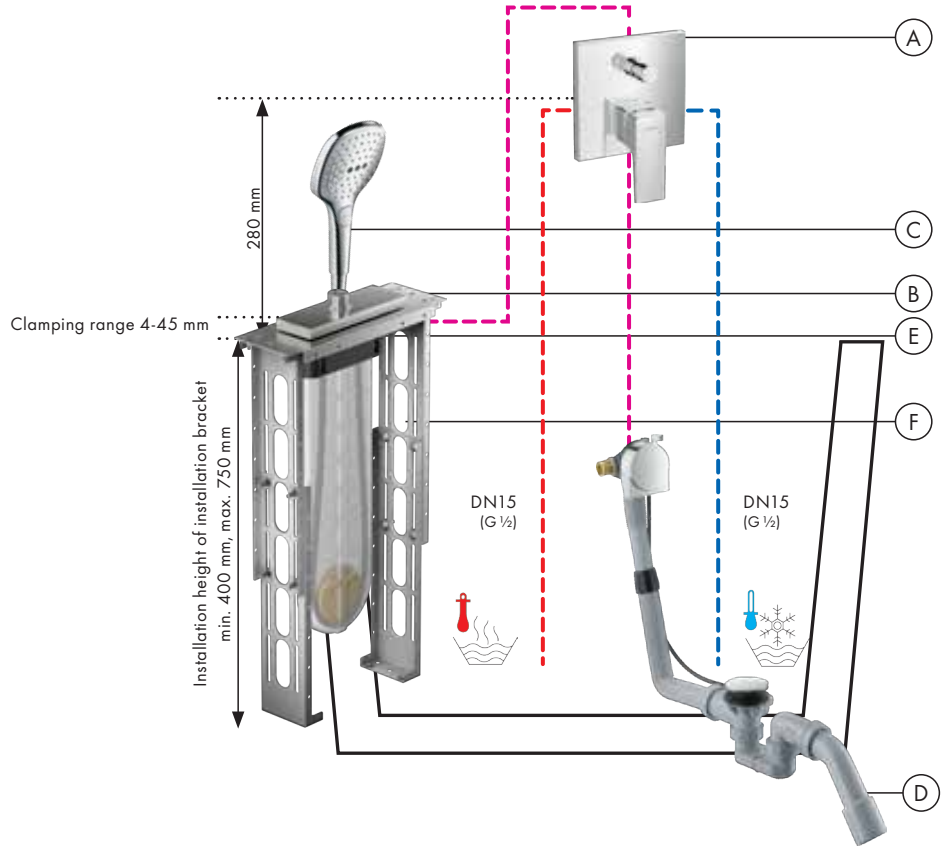

Flow diagram

Raindance Select E
Hand shower 120 3jet
26520, -000

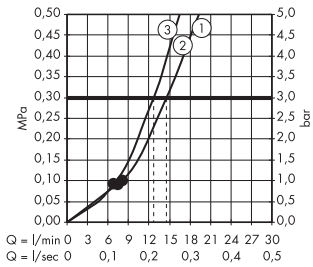

Legend
① RainAir
② Rain
③ Whirl

• denotes minimum operating pressure.

Bath tub concealed installation

Ⓐ **Raindance Select S**
Shower set 120 3jet
with shower bar 110 cm right
26326, -000

Ⓑ **FixFit**
Wall outlet S with non-return valve
and synthetic connection angle
26453, -000

Ⓒ **DuoTurn S**
Mixer for concealed installation
for 2 functionsr
75418, -000

Basic set iBox universal 2
(not shown)
01500180

Ⓓ **Exafill**
Complete set bath filler,
waste and overflow set
for standard bath tubs
58123, -000

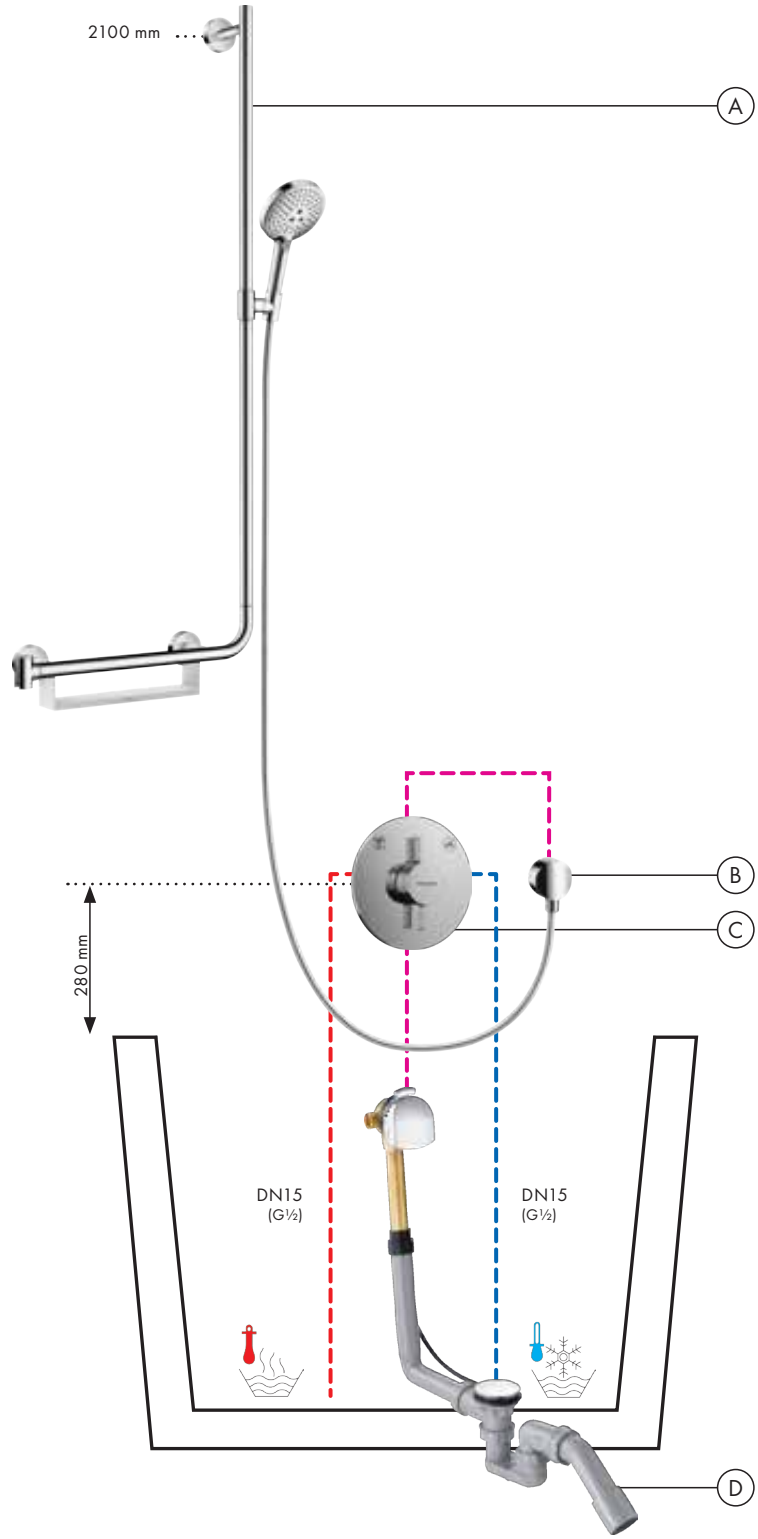

Flow diagram

Raindance Select S
Hand shower 120 3jet
26530, -000

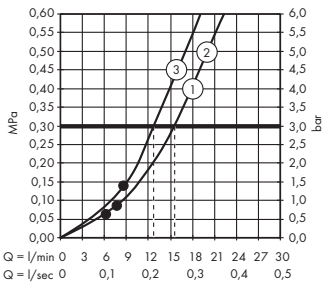

Legend
① RainAir
② Rain
③ Whirl

• denotes minimum operating pressure.

CubeStack Installation examples

22413CHN

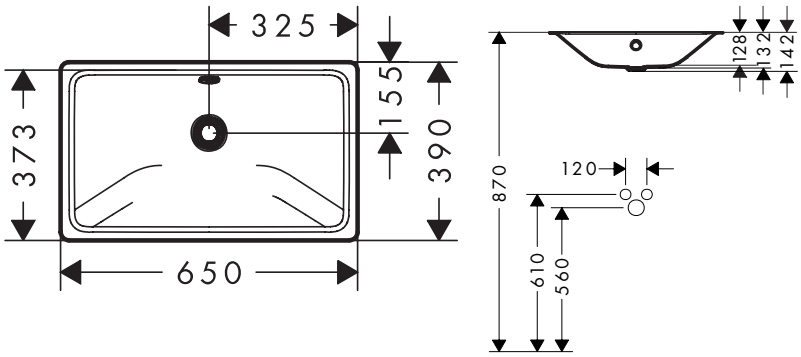

22414CHN

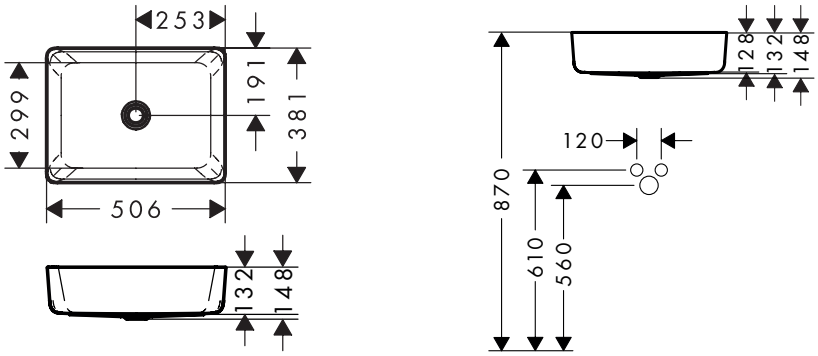

22415CHN

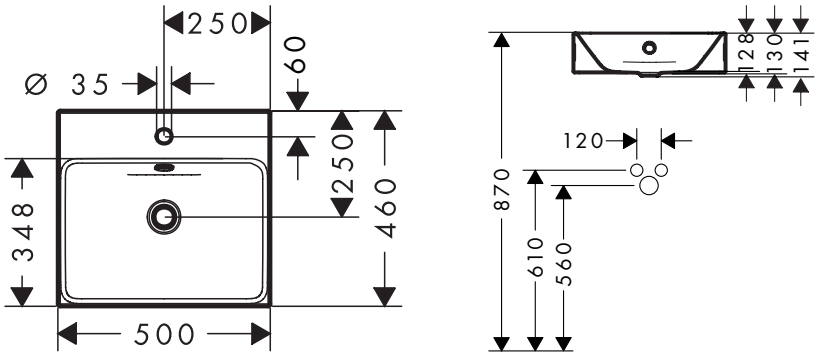

Dimensions may vary due to ceramic tolerances related to the production process.

22422CHN

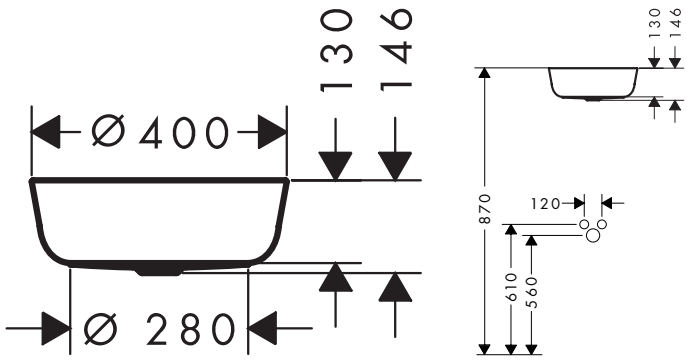

22421CHN

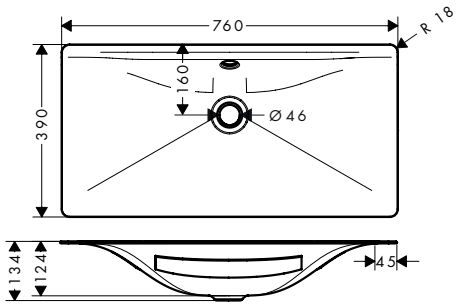

Dimensions may vary due to ceramic tolerances related to the production process.

MellowTide Q Installation examples

22426CHN

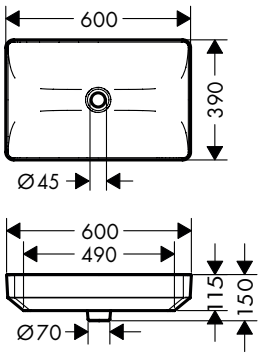

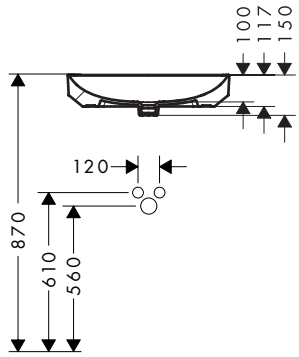

22425CHN

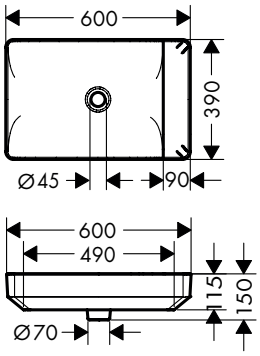

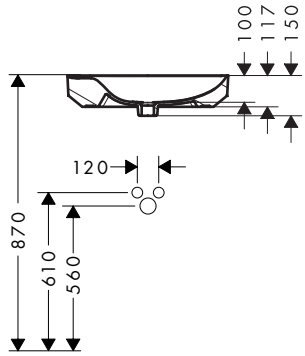

22427CHN

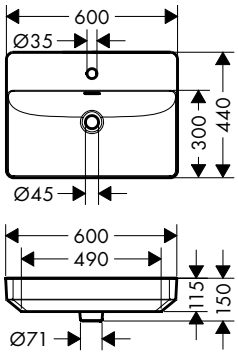

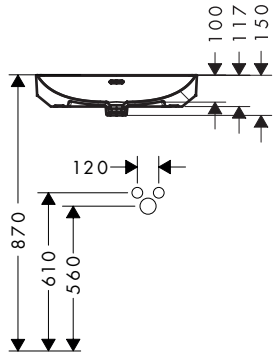

22428CHN

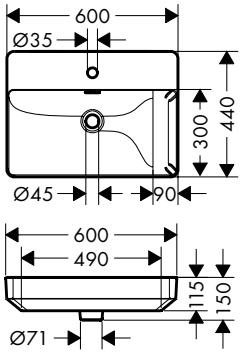

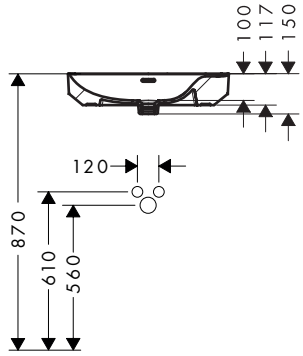

Dimensions may vary due to ceramic tolerances related to the production process.

22430CHN

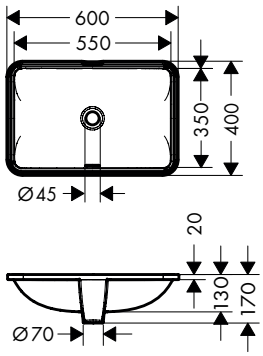

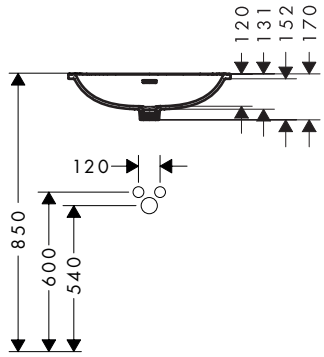

Dimensions may vary due to ceramic tolerances related to the production process.

MellowTide U Installation examples

22424CHN

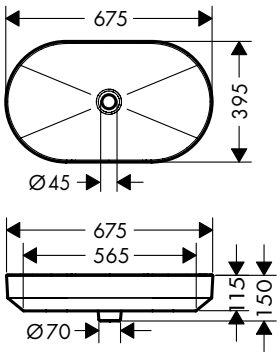

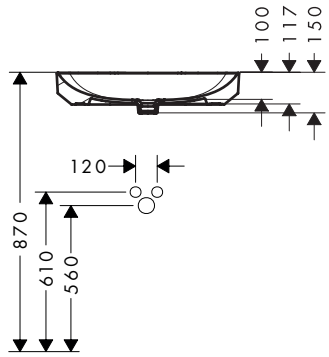

22423CHN

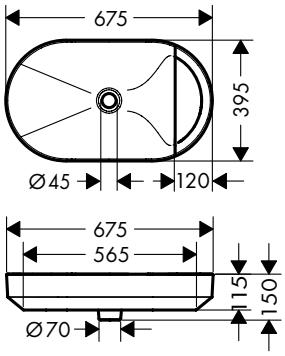

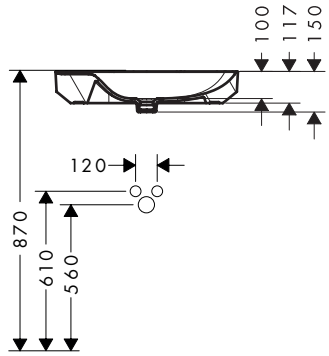

22429CHN

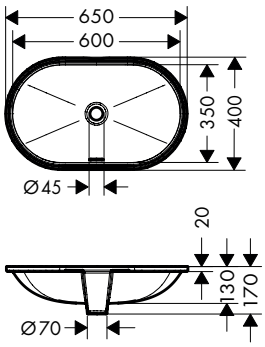

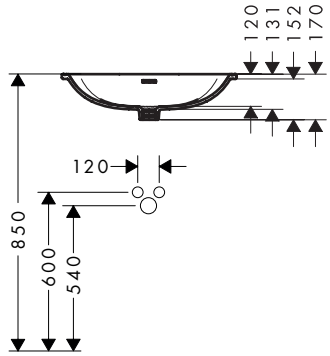

Dimensions may vary due to ceramic tolerances related to the production process.

22438CHN

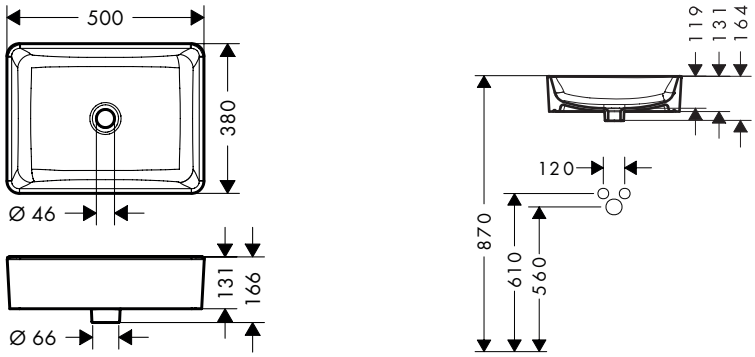

22439CHN

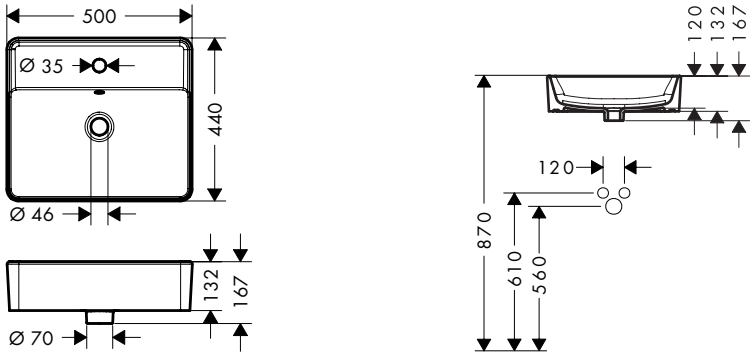

22440CHN

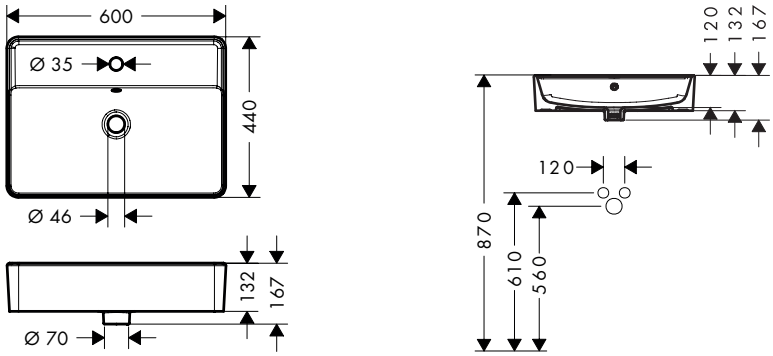

22443CHN

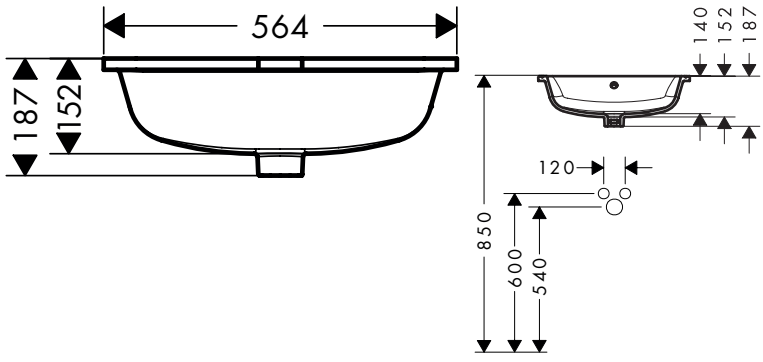

Dimensions may vary due to ceramic tolerances related to the production process.

LakeShore Q Installation examples

22444CHN

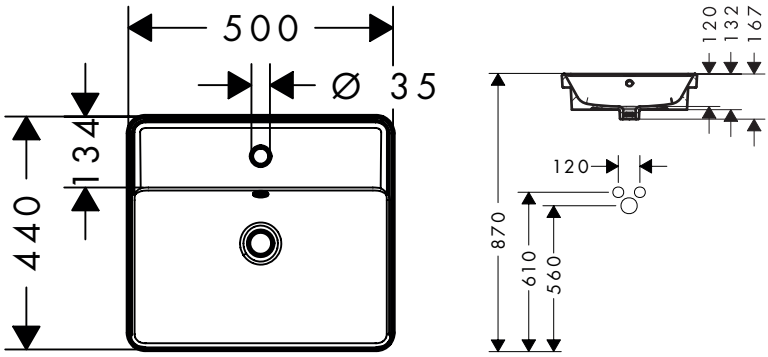

Dimensions may vary due to ceramic tolerances related to the production process.

22437CHN

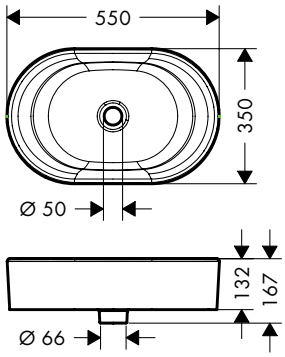

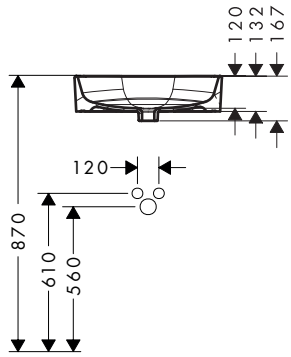

22441CHN

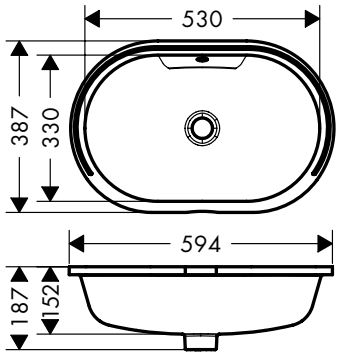

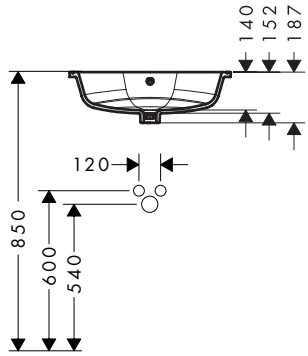

Dimensions may vary due to ceramic tolerances related to the production process.

Xuniva S Installation examples

60163XXX, 61070XXX

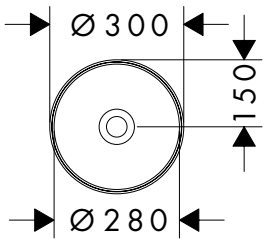

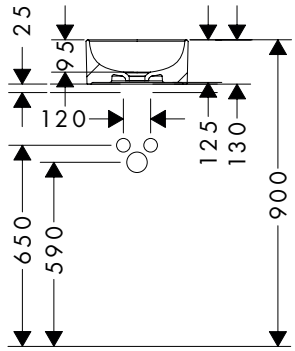

60164XXX, 61071XXX

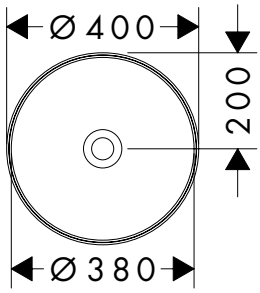

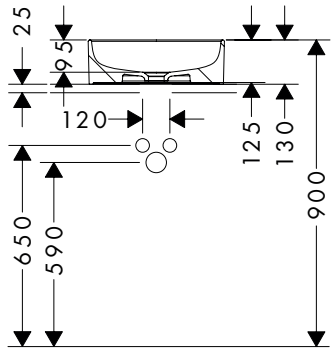

60169XXX, 61076XXX

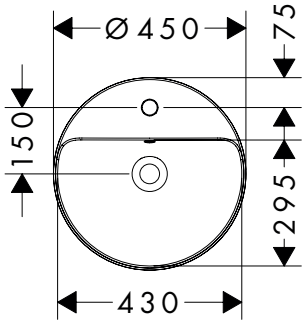

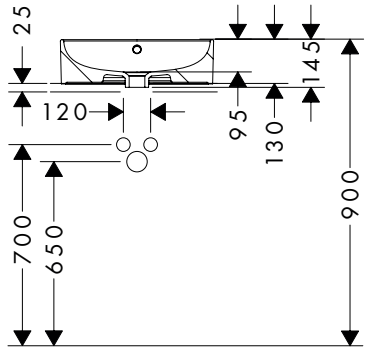

60155XXX, 61054XXX

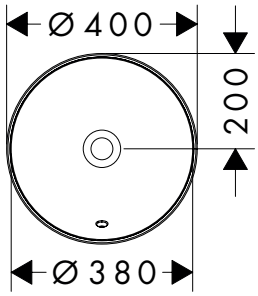

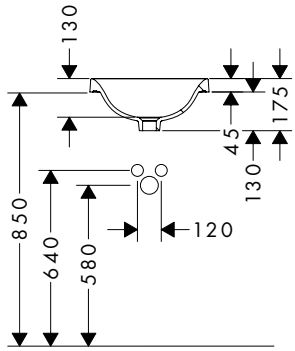

Dimensions may vary due to ceramic tolerances related to the production process.

60159XXX, 61056XXX

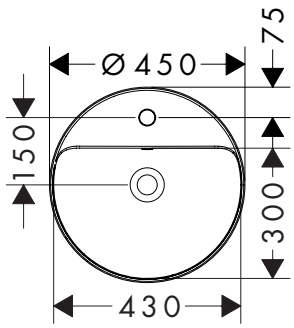

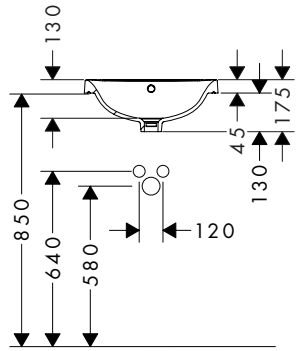

60151XXX, 61046XXX

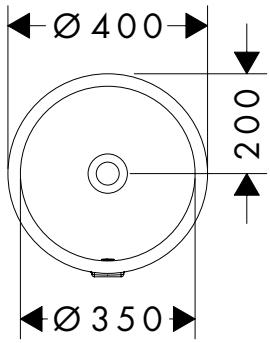

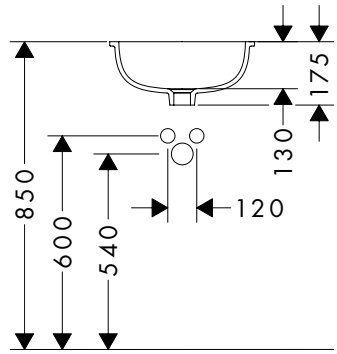

Dimensions may vary due to ceramic tolerances related to the production process.

Xuniva Q Installation examples

60167XXX, 61074XXX

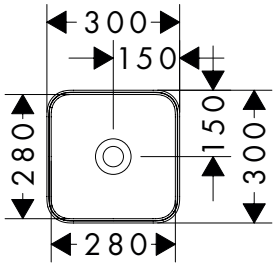

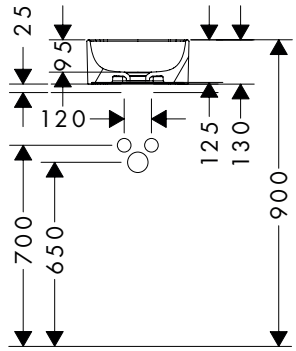

60168XXX, 61075XXX

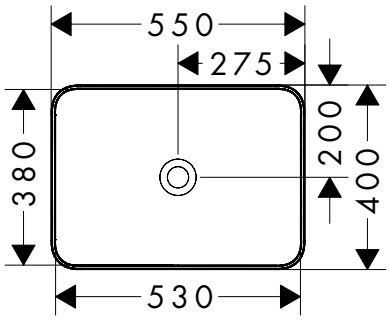

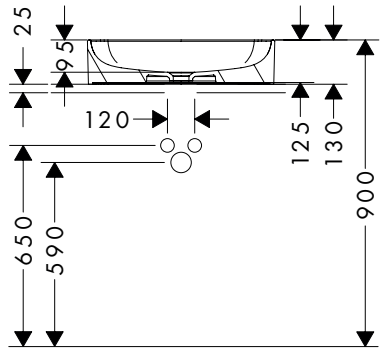

60172XXX, 61082XXX

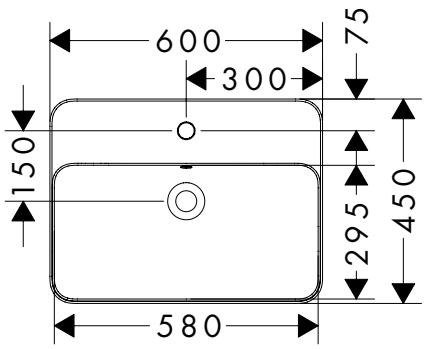

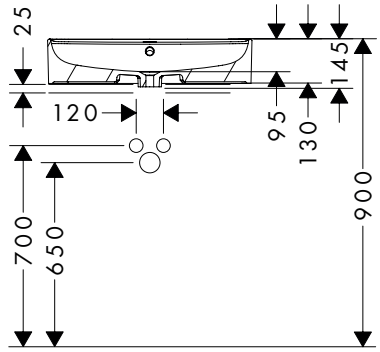

60158XXX, 61066XXX

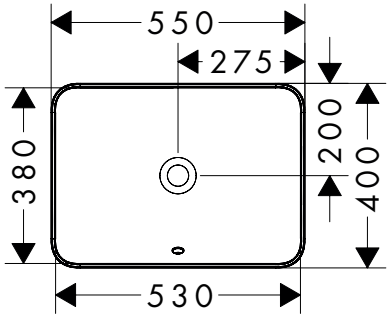

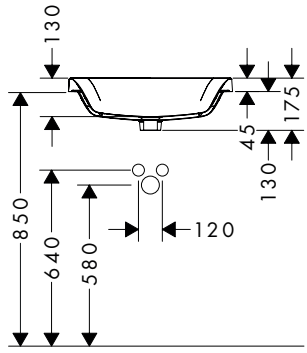

Dimensions may vary due to ceramic tolerances related to the production process.

60162XXX, 61068XXX

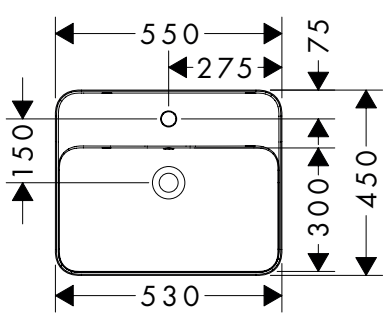

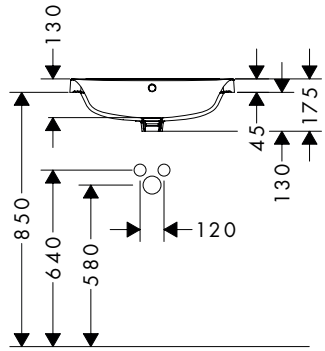

60154XXX, 61052XXX

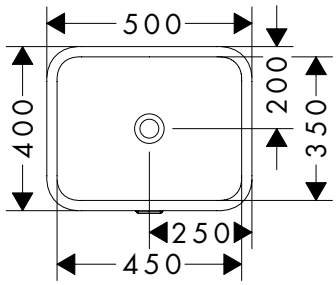

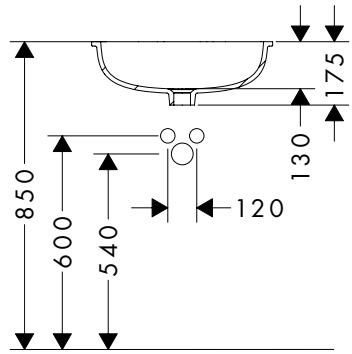

Dimensions may vary due to ceramic tolerances related to the production process.

Xuniva D Installation examples

60165XXX, 61072XXX

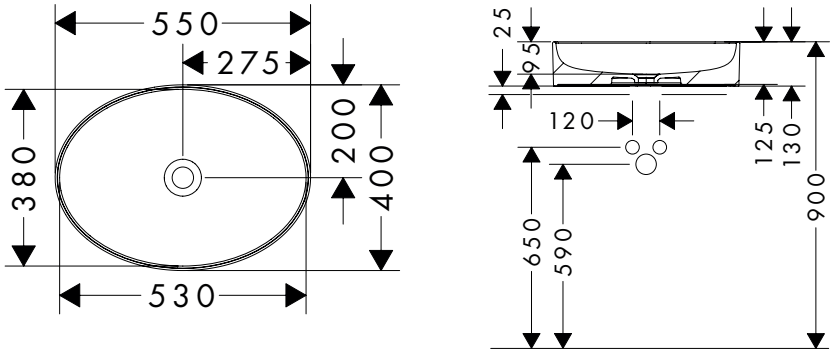

60170XXX, 61078XXX

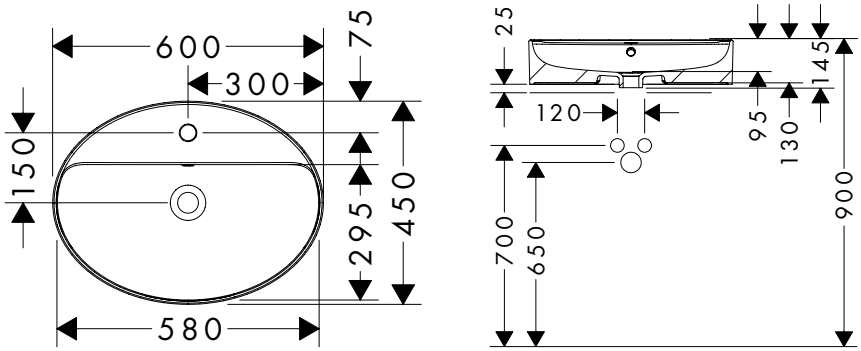

60156XXX, 61058XXX

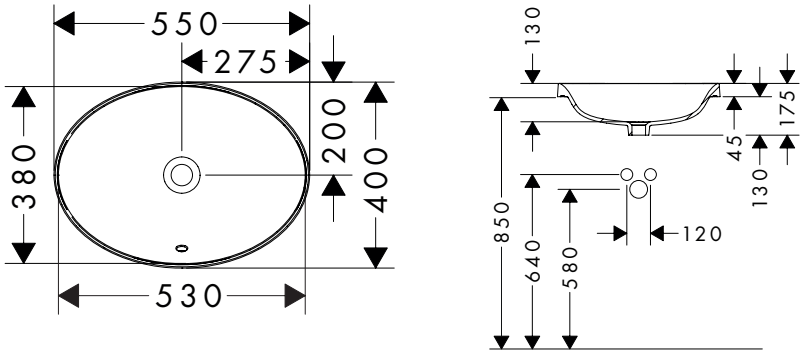

60160XXX, 61060XXX

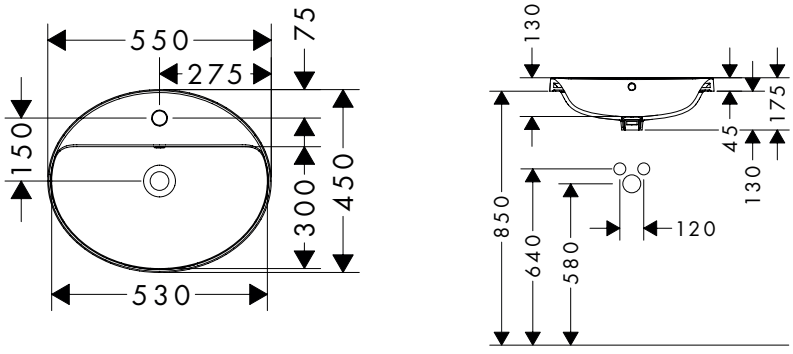

Dimensions may vary due to ceramic tolerances related to the production process.

60152XXX, 61048XXX

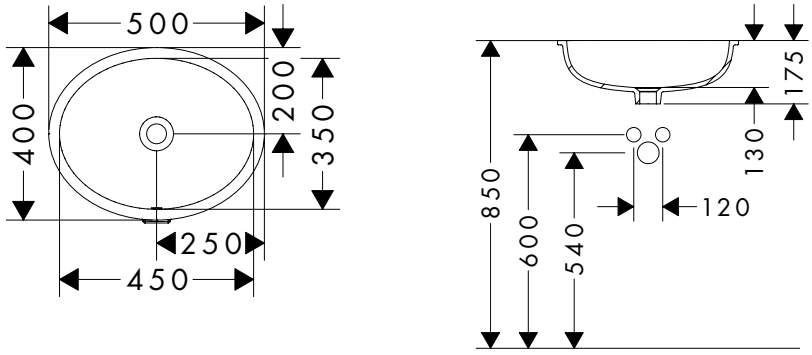

Dimensions may vary due to ceramic tolerances related to the production process.

Xuniva U Installation examples

60166XXX, 61073XXX

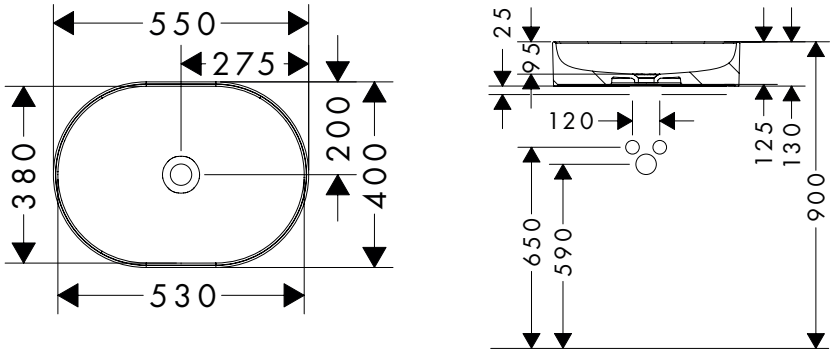

60171XXX, 61080XXX

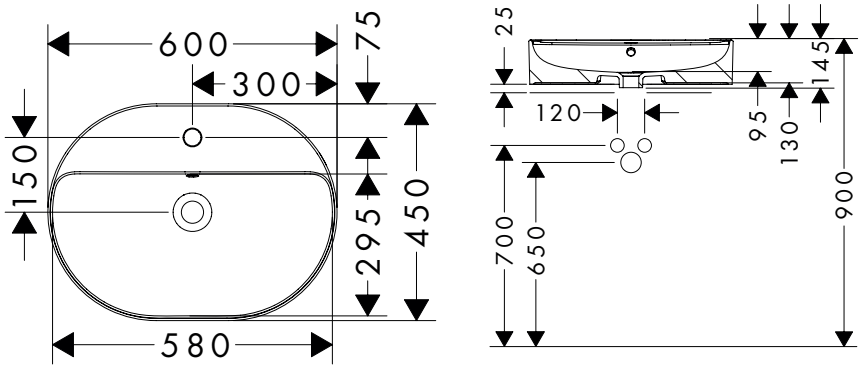

60157XXX, 61062XXX

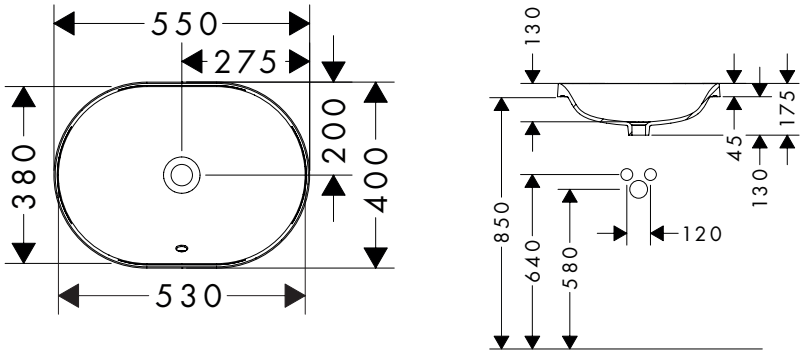

60161XXX, 61064XXX

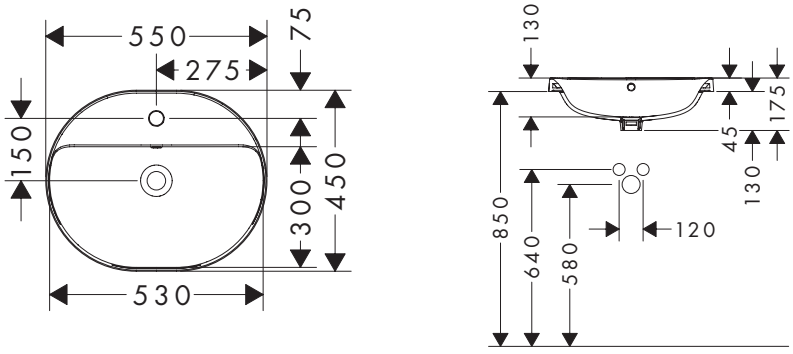

Dimensions may vary due to ceramic tolerances related to the production process.

60153XXX, 61050XXX

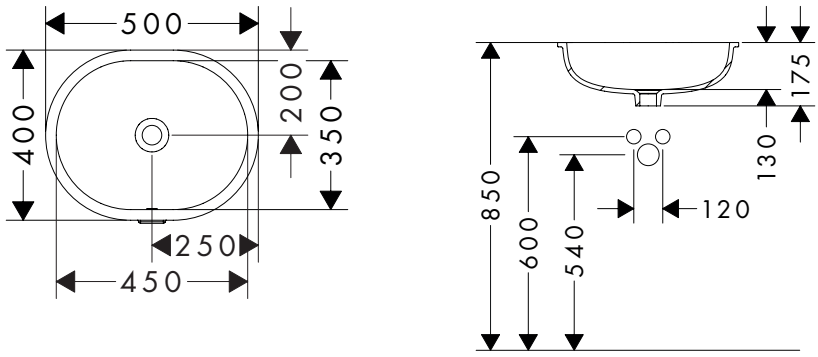

Dimensions may vary due to ceramic tolerances related to the production process.

Isiflex Shower hose 160 cm

Features

- high-quality shower hose
- with plastic coating, easy to clean
- shower hose length: 1.60 m
- pivot connector prevents hose from tangling
- kink-protected
- nuts shower hose: conical nut on both ends
- connection thread: G ½



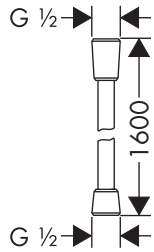

Certificates/declarations

Finish	Code no.
Chrome	28276000
Chrome/Gold Optic	28276090
Brushed Bronze	28276140
Brushed Gold Optic	28276250
Polished Red Gold	28276300
Brushed Black Chrome	28276340
White	28276450
Grey	28276460
Black	28276610
Matt Black	28276670
Matt White	28276700
Stainless Steel Optic	28276800
Brushed Nickel	28276820
Fine Brass	28276840
Satin Chrome	28276880
Brushed Brass	28276950
Polished Gold Optic	28276990

Measurements within scale drawings are in mm.
Technical specifications and units of measure are subject to change.

Croma 100 Hand shower Multi

Features

- shower head size: 100 mm
- spray type: Rain, MonoRain, Massage spray
- spray type adjustment by turning spray disc
- spray disc surface: grey
- maximum flow rate at 3 bar: 19 l/min
- minimum flow pressure: 1,2 bar
- with internal water conduction
- rinseable screen seal
- connection thread G ½
- suitable for continous flow water heaters



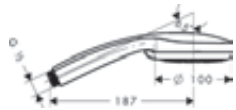

Technologies

Quick Clean · XXL Performance

Spray types

Rain · Massage · Mono Rain

Certificates/declarations

EPD

Finish	Code no.
Chrome	28536000
White	28536450
Grey	28536460
Satin Chrome	28536880

Support for Unica'88 wall bar Ø 22 mm

Features

- diameter: 22 mm



Finish	Code no.
Chrome	28672000

Support for Unica'E wall bar (satinchrome)



Finish	Code no.
Satin Chrome	96170000

Measurements within scale drawings are in mm.
Technical specifications and units of measure are subject to change.

Spare parts and accessories for showers, bath mixers and kitchen mixers

Support for Unica' S Puro wall bar

Features

· diameter: 22 mm



Finish	Code no.
Chrome	97651000

Slider for Unica'D shower bar

Features

· diameter: 25 mm



Finish	Code no.
Chrome	96190000
Fine Brass	96190840
Satin Chrome	96190880

support Raindance Unica'S



Finish	Code no.
Chrome	98520000

Support Unica'C

Features

· diameter: 22 mm



Finish	Code no.
Chrome	98753000

Measurements within scale drawings are in mm.
Technical specifications and units of measure are subject to change.

Ceramic cartridge complete M3/ M2



Code no.
92730000

Ceramic cartridge M1 complete



Code no.
97685000

Ball cartrigde complete

Features

· for bath and shower mixers



Code no.
14096000

Cartridge complete without mouth spray connection unit

Features

· for washbasin mixers, bidet mixers and single lever kitchen mixers



Code no.
14095000

Joystick cartridge complete J27



Code no.
96783000

Measurements within scale drawings are in mm.
Technical specifications and units of measure are subject to change.

Mixer spare parts and accessories

Joystick cartridge complete for AXOR mixer



Code no.
96339000

Service set without service key



Code no.
98804000

Service set

Features

- service key part of delivery
- for mixers with ball mixing systems



Code no.
13952000

Mixer ball without mouth spray connection unit

Features

- for mixers with ball mixing systems



Code no.
13964000

Aerator for Exafill complete



Code no.
96326000

Measurements within scale drawings are in mm.
Technical specifications and units of measure are subject to change.

Aerator M24x1 with water dimmer 7 l/min

Features

- QuickClean
- non-splashing water flow
- thread dimension: M24x1
- flow rate: 7 l/min
- usage: bathroom mixer
- packaging unit: 1 piece



Finish	Code no.
Chrome	13085000

Aerator basin mixer 5 l/min





Finish	Code no.
Chrome	95455000

Aerator M24 x 1 basin mixer

Features

- thread dimension: M24x1
- flow rate: 5 l/min
- with additional value: swivelling
- usage: bathroom mixer



Code no.
95282000

Aerator M24 x 1 basin mixer

Features

- thread dimension: M24x1
- flow rate: 5 l/min
- usage: bathroom mixer



Finish	Code no.
Chrome	92996000

Mixer spare parts and accessories

Spray former M24x1 pressureless

Features

· thread dimension: M24x1



Finish	Code no.
Chrome	94033000

QuickClean aerator M24x1 without water dimmer for kitchen mixer

Features

· thread dimension: M24x1
· flow rate: 15 l/min
· usage: kitchen mixer
· packaging unit: 10 pieces



Finish	Code no.
Chrome	13913000

MTC temperature control unit for thermostatic mixer

Features

· wax capsule



Code no.
94282000

Temperature cartridge for thermostatic mixer DN15

Features

· DN15
· wax capsule



Code no.
92601000

Measurements within scale drawings are in mm.
Technical specifications and units of measure are subject to change.

Thermostat cartridge for swapped supply



Code no.
92373000

Temperature cartridge for thermostatic mixer DN20

Features

- DN20
- wax capsule



Code no.
92631000

Thermostat cartridge SMTC

Features

- wax capsule



Code no.
98282000

Thermostat cartridge (BTC)

Features

- wax capsule



Code no.
96633000

Mixer spare parts and accessories

Shut-off unit with ceramic valves

Features

- ceramic
- DN15
- right closing
- closing angle: 180°



Code no.
94149000

Ceramic shut-off unit right-closing

Features

- ceramic
- DN15
- right closing
- closing angle: 90°



Code no.
94009000

Ceramic shut-off unit left-closing

Features

- ceramic
- DN15
- left closing
- closing angle: 90°



Code no.
94008000

Shut-off unit spindle

Features

- spindle
- DN15
- right closing



Code no.
94142000

Measurements within scale drawings are in mm.
Technical specifications and units of measure are subject to change.

Shut off unit with selector

Features

· ceramic



Code no.
98283000

Shut off unit with selector



Code no.
96509000

Diverter for bath mixer for concealed installation with iBox universal



Finish	Code no.
Chrome	95014000

Shut-off unit AV-P DN9

Features

· DN9



Code no.
95758000

Diverter for bath mixer for concealed installation



Code no.
13970000

Mixer spare parts and accessories

Diverter complete for bath and shower mixer for concealed installation from 06/1987



Finish	Code no.
Chrome	13971000

Cartridge on/off control for 5 consumer (AUV 50-5)



Code no.
96645000

Diverter complete for bath mixer for exposed installation wall-mounted



Code no.
94077000

Filter packing

Features

· packaging unit = 5 pieces



Code no.
94246000

Sealing foil iBox universal

Code no.
96445000

Sealing set



Code no.
92646000

Measurements within scale drawings are in mm.
Technical specifications and units of measure are subject to change.

Handle for Excentra Fill/ Flexaplus



Finish	Code no.
Chrome	96083000

Safety plug for Excentra Fill/ Flexaplus



Finish	Code no.
Chrome	96153000
Polished Bronze	96153130

O-ring seal 16x2mm



	Code no.
	98133000

Hose seal



	Code no.
	98058000

Sealing set for kitchen mixers



	Code no.
	98702000

Wall bar spacer for Croma 100 Showerpipe



Finish	Code no.
Chrome	95239000

Mixer spare parts and accessories

Secuflex metal shower hose for 4-hole rim mounted/ tile mounted bath mixer

Features

- length: 2000 mm
- maximum pull-out length : 1100 mm
- thread dimension: G ½ x G ½



Finish	Code no.
Chrome	94148000

Secuflex protective hose for 3-hole and 4-hole mixers, 2.00 m

Features

- length: 2000 mm



	Code no.
	94108000

Thumb plug complete



Finish	Code no.
Chrome	96026000

Seal for pop-up waste set Push-Open G 1 ¼



	Code no.
	97205000

Cover Exafill



Finish	Code no.
Chrome	95093000

Measurements within scale drawings are in mm.
Technical specifications and units of measure are subject to change.

Cover exafill



Finish	Code no.
Chrome	96146000

Fixing screw iBox universal M5 x 55



Code no.
96454000

Filter packing set



Code no.
96922000

Clip Ø 22 mm for Casetta Unica'88 and Casetta Unica'S soap dishes

Features

· packaging unit: 1 piece



Code no.
96189000

Non-return valve

Features

· packaging unit: 2 pieces



Code no.
94074000

Mixer spare parts and accessories

Plug Push-Open



Finish	Code no.
Chrome	97204000

Seal DN32



	Code no.
	53971000

Rim mounted adapter 25°

Features

· dimension: G ½



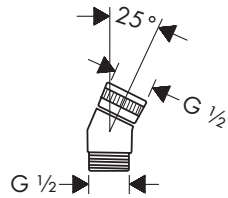

Finish	Code no.
Chrome	28071000

O-Ring 14x2,5mm



	Code no.
	98189000

O-ring seal 11x2mm



	Code no.
	98127000

Measurements within scale drawings are in mm.
Technical specifications and units of measure are subject to change.

handspray Talis S



Finish	Code no.
Chrome	97999000

Connection hose for shower column M10 x G ⅜

Features

- length: 450 mm
- thread dimension: M10 x G ⅜



Code no.
96507000

Service set for Team Compact overhead shower



Code no.
92017000

Converter complete



Code no.
96100000

Handle for Ecostat 1001 SL thermostatic mixer for exposed installation



Finish	Code no.
Chrome	96618000

Mixer spare parts and accessories

Select adapter



Code no.
92219000

Seal for stud bolt Ø 45 mm



Code no.
98996000

Connection hose450 mm with M8 x G ⅜ connecting nut

Features

- length: 450 mm
- thread dimension: M8 x G ⅜



Code no.
97206000

Wedge-shaped seal DN32



Code no.
53985000

O-Ring 29x3

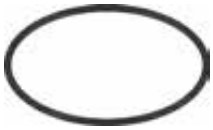

Code no.
98371000

Measurements within scale drawings are in mm.
Technical specifications and units of measure are subject to change.

Non-return valve for thermostatic mixer



Code no.
92605000

Hose for sink mixer 1250mm



Code no.
95506000

Non return valve OV15/DN15



Code no.
97350000

Back flow preventer CV15S



Code no.
92594000

Thumb plug for plastic pop-up waste



Finish	Code no.
Chrome	92175000

hose for sink mixer 1500mm



Code no.
95507000

Support Exafill



Finish	Code no.
Chrome	96094000

Measurements within scale drawings are in mm.
Technical specifications and units of measure are subject to change.

The consumption was measured in combination with the appropriate fittings (thermostat/mixer/in-wall valve) to reflect actual application in practice.

Hand showers

· **Rainfinity** Hand shower 130 3jet
 # 26864000, 26864140, 26864340, 26864670, 26864700, 26864990

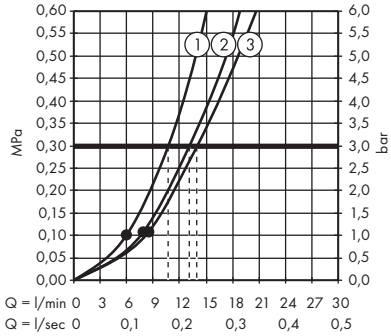

1. Mono
2. Intense PowderRain
3. PowderRain

· **Rainfinity** Hand shower 130 3jet EcoSmart
 # 26865000, 26865140, 26865340, 26865670, 26865700, 26865990

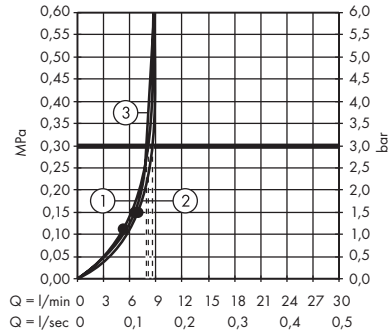

1. Mono
2. Intense PowderRain
3. PowderRain

· **Rainfinity** Baton hand shower 100 1jet
 # 26866000, 26866140, 26866340, 26866670, 26866700, 26866990

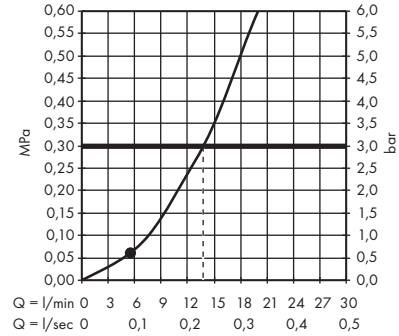

Overhead showers

· **Rainfinity** Baton hand shower 100 1jet EcoSmart
 # 26867140, 26867340, 26867670, 26867990

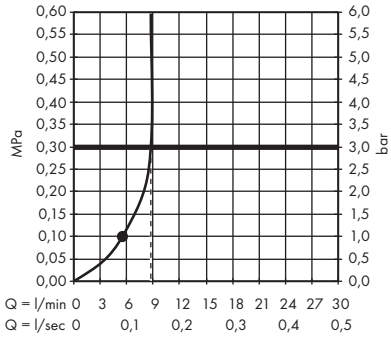

· **Rainfinity** Overhead shower 250 1jet with wall connector
 # 26226000, 26226700

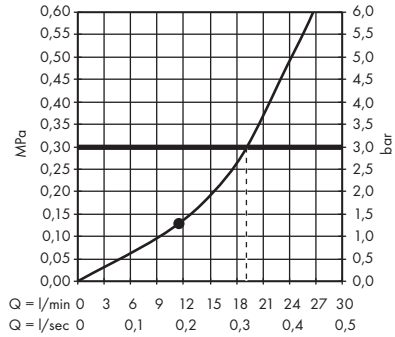

· **Rainfinity** Overhead shower 250 1jet EcoSmart with wall connector
 # 26227000, 26227700

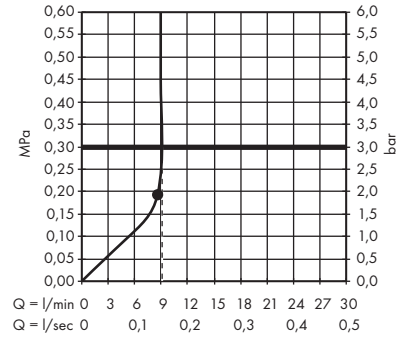

· **Rainfinity** Overhead shower 250 1jet
 # 26228000, 26228140, 26228340, 26228670, 26228700, 26228990

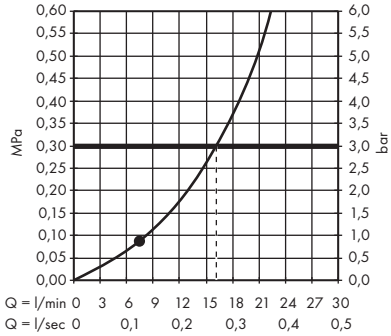

· **Rainfinity** Overhead shower 250 1jet EcoSmart
 # 26229000, 26229140, 26229340, 26229670, 26229700, 26229990

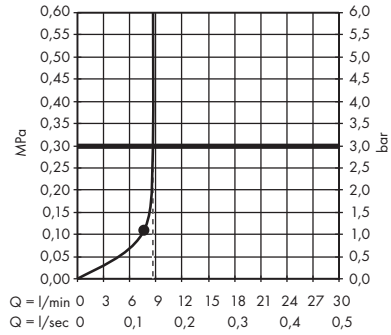

· **Rainfinity** Overhead shower 360 1jet with wall connector
 # 26230000, 26230140, 26230340, 26230670, 26230700, 26230990

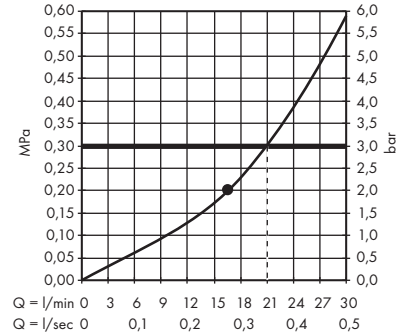

The consumption was measured in combination with the appropriate fittings (thermostat/mixer/in-wall valve) to reflect actual application in practice.

· **Rainfinity** Overhead shower 360 1jet
 # 26231000, 26231140, 26231340, 26231670, 26231700, 26231990

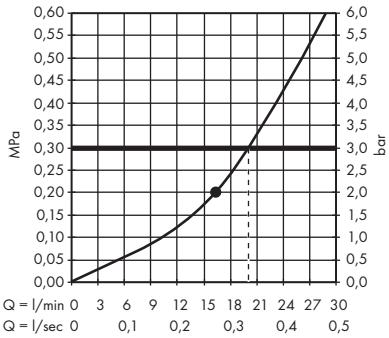

· **Rainfinity** Overhead shower 250 3jet with wall connector
 # 26232000, 26232700

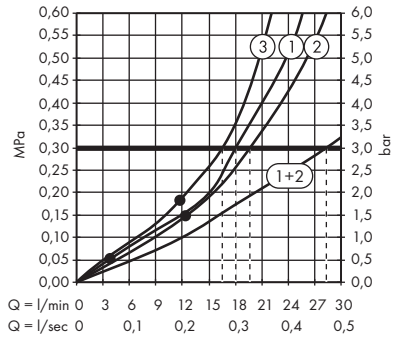

1. Intense PowderRain
2. PowderRain
3. RainStream

· **Rainfinity** Overhead shower 250 3jet EcoSmart with wall connector
 # 26233000, 26233700

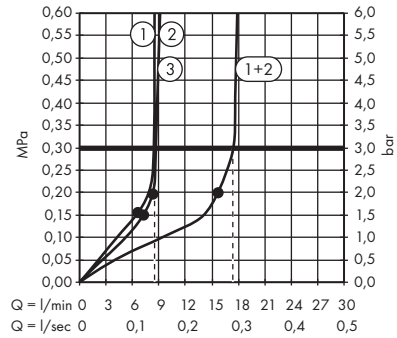

1. RainStream
2. PowderRain
3. Intense PowderRain

· **Rainfinity** Overhead shower 360 3jet with wall connector
 # 26234000, 26234140, 26234340, 26234670, 26234700, 26234990

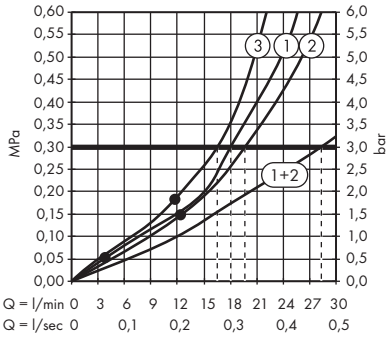

1. Intense PowderRain
2. PowderRain
3. RainStream

Body showers

· **Rainfinity** Shoulder shower 500 1jet with shower shelf
 # 26243000, 26243140, 26243340, 26243670, 26243700, 26243990

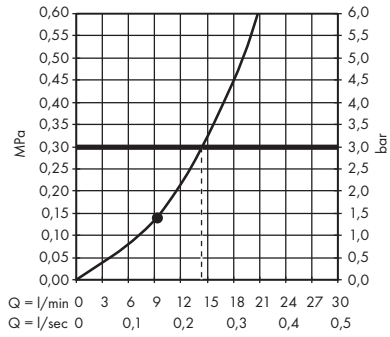

Showerpipes

· **Rainfinity** Showerpipe 360 1jet for concealed installation
 # 26842000, 26842700

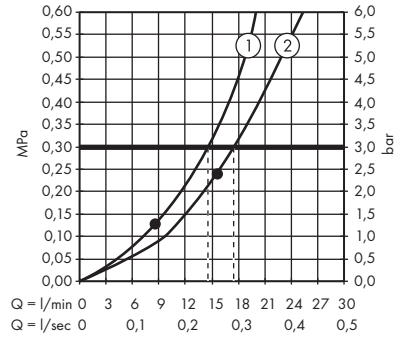

1. Hand shower
2. Overhead shower

The consumption was measured in combination with the appropriate fittings (thermostat/mixer/in-wall valve) to reflect actual application in practice.

Overhead showers

· **Rainmaker Select** Overhead shower 580 3jet
 # 24001400, 24001600

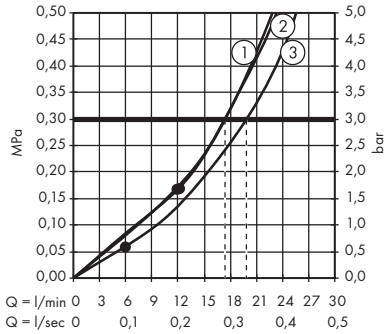

1. Rain
2. Rainflow
3. Mono

· **Rainmaker Select** Overhead shower 460 1jet with ceiling connector
 # 24002400

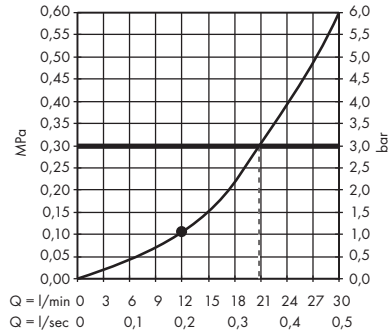

· **Rainmaker Select** Overhead shower 460 1jet with shower arm
 # 24003400, 24003600

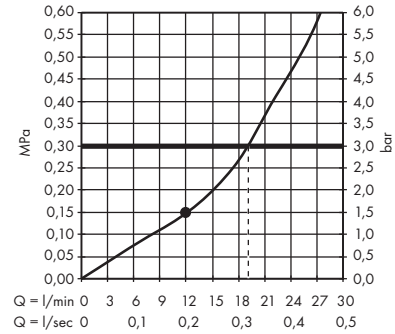

· **Rainmaker Select** Overhead shower 460 2jet with ceiling connector
 # 24004400

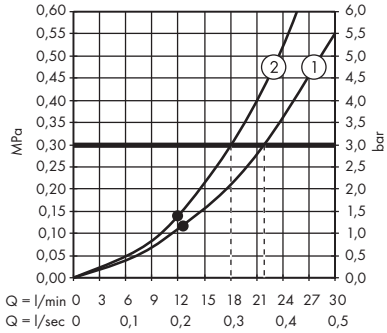

1. Rain
2. RainStream

· **Rainmaker Select** Overhead shower 460 2jet with shower arm
 # 24005400, 24005600

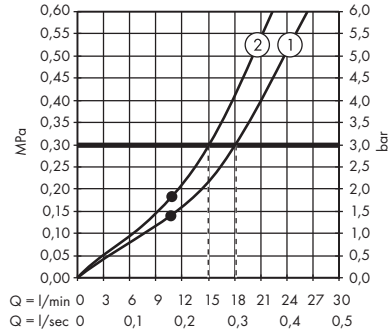

1. Rain
2. RainStream

· **Rainmaker Select** Overhead shower 460 3jet with ceiling connector
 # 24006400, 24006600

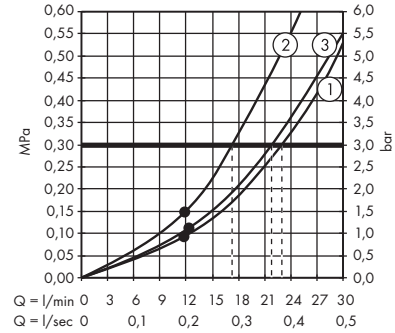

1. Mono
2. Rain
3. RainStream

· **Rainmaker Select** Overhead shower 460 3jet with shower arm
 # 24007400

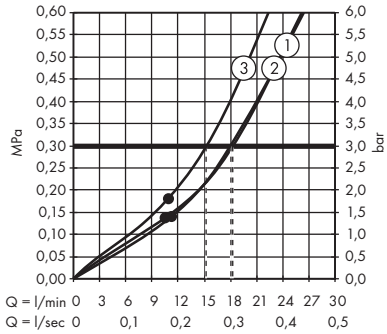

1. Mono
2. Rain
3. RainStream

· **Rainmaker Select** Overhead shower 580 3jet with wall connector
 # 24011400

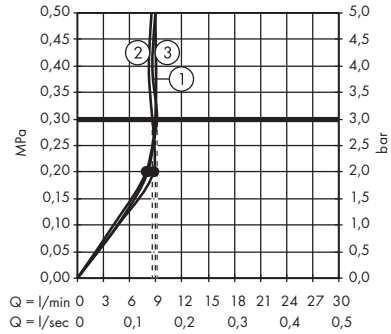

1. Rain
2. Rainflow
3. Mono

· **Rainmaker Select** Overhead shower 460 1jet EcoSmart 9 l/min with ceiling connector
 # 24012400

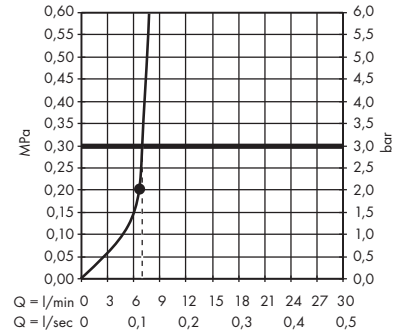

Rainmaker Select

The consumption was measured in combination with the appropriate fittings (thermostat/mixer/in-wall valve) to reflect actual application in practice.

· **Rainmaker Select** Overhead shower 460 1jet EcoSmart 9 l/min with shower arm
 # 24013400

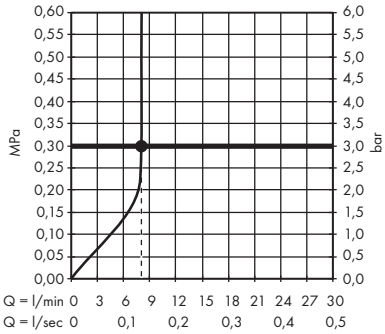

· **Rainmaker Select** Overhead shower 460 2jet EcoSmart 9 l/min with ceiling connector
 # 24014400

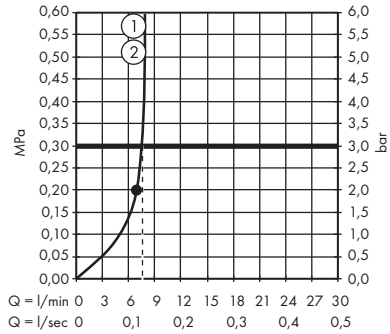

1. Rain
2. RainStream

· **Rainmaker Select** Overhead shower 460 3jet EcoSmart 9 l/min with ceiling connector
 # 24016400

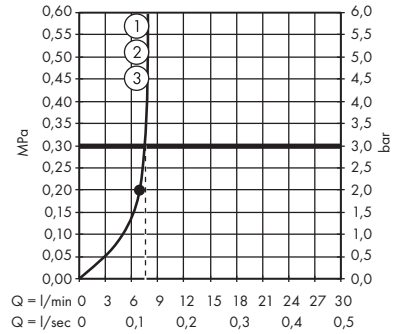

1. Rain
2. RainStream
3. Mono

· **Rainmaker Select** Overhead shower 460 3jet EcoSmart 9 l/min with shower arm
 # 24017400

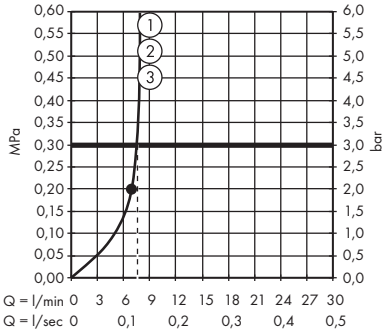

Showerpipes

· **Rainmaker Select** Showerpipe 460 2jet EcoSmart 9 l/min with thermostat
 # 27028400

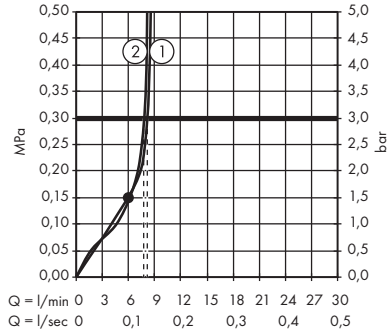

1. Hand shower
2. Overhead shower

· **Rainmaker Select** Showerpipe 460 3jet with thermostat
 # 27106400

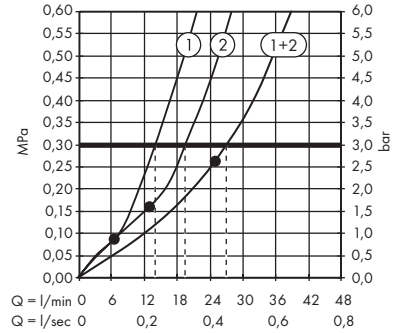

1. Hand shower
2. Overhead shower

· **Rainmaker Select** Showerpipe 460 2jet with thermostat
 # 27109400

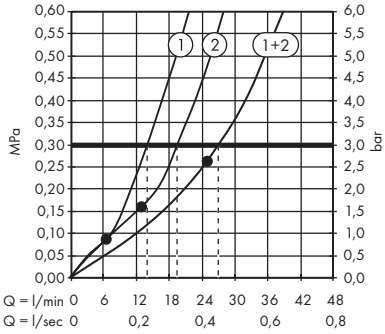

1. Hand shower
2. Overhead shower

The consumption was measured in combination with the appropriate fittings (thermostat/mixer/in-wall valve) to reflect actual application in practice.

Overhead showers

· **Raindance Rainfall** Overhead shower 180 2jet
 # 28433000

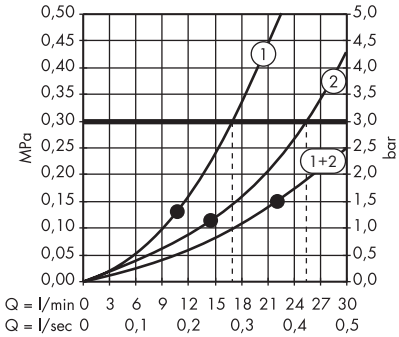

· **Raindance Rainfall** Overhead shower 150 1jet
 # 26442000

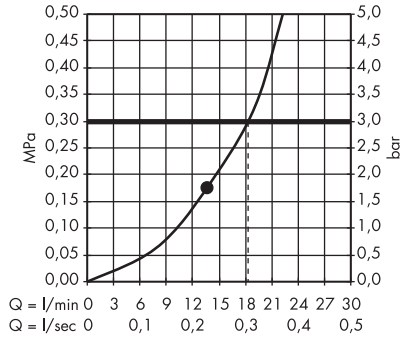

1. RainAir
2. Rainflow

The consumption was measured in combination with the appropriate fittings (thermostat/mixer/in-wall valve) to reflect actual application in practice.

Hand showers

· **Raindance Select E** Hand shower 150 3jet
 # 26550000, 26550400

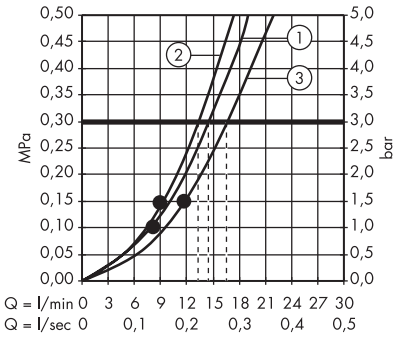

1. RainAir
2. CaresseAir
3. Mix

· **Raindance Select E** Hand shower 150 3jet EcoSmart 9 l/ min
 # 26551000, 26551400

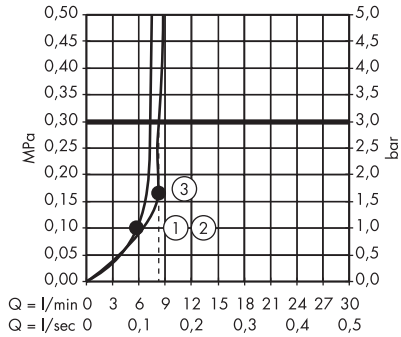

1. RainAir
2. CaresseAir
3. Mix

· **Raindance Select E** Hand shower 120 3jet
 # 26520000, 26520140, 26520340, 26520400, 26520670, 26520700, 26520990

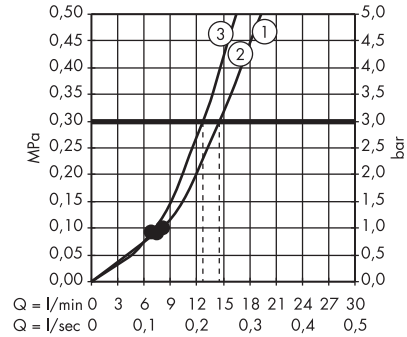

1. RainAir
2. Rain
3. WhirlAir

· **Raindance Select E** Hand shower 120 3jet EcoSmart
 # 26521000, 26521400

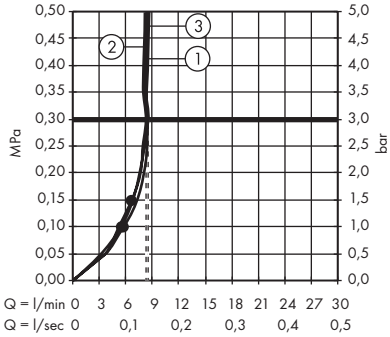

1. RainAir
2. WhirlAir
3. Rain

· **Raindance Select S** Hand shower 150 3jet
 # 28587000, 28587400

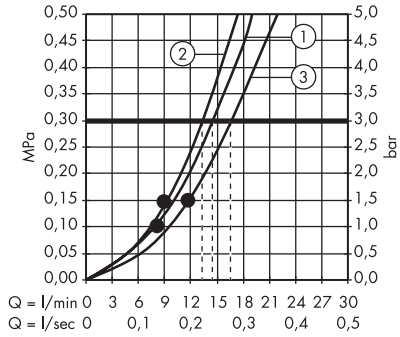

1. RainAir
2. CaresseAir
3. Mix

· **Raindance Select S** Hand shower 150 3jet EcoSmart
 # 28588000, 28588400

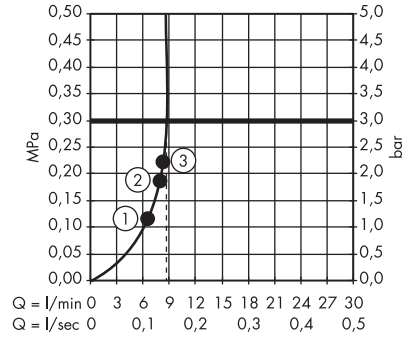

1. RainAir
2. CaresseAir
3. Mix

· **Raindance Select S** Hand shower 120 3jet PowderRain
 # 26014000, 26014140, 26014340, 26014670, 26014700, 26014990

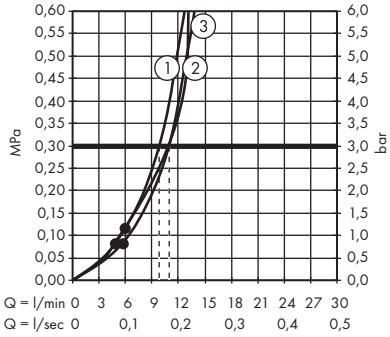

1. WhirlAir
2. PowderRain
3. Rain

· **Raindance Select S** Hand shower 120 3jet PowderRain EcoSmart
 # 26515000

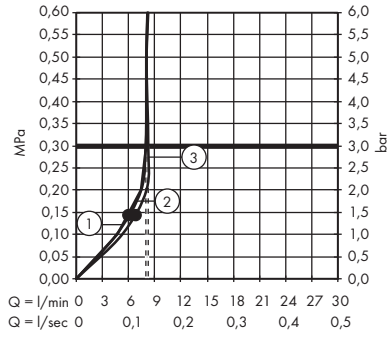

1. WhirlAir
2. PowderRain
3. Rain

· **Raindance Select S** Hand shower 120 3jet PowderRain Green
 # 26516000

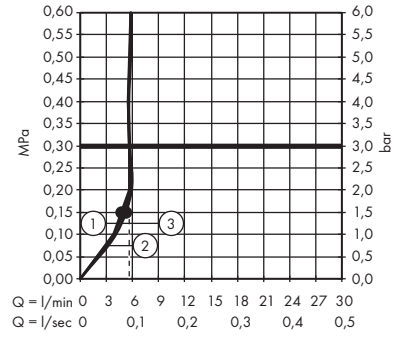

1. WhirlAir
2. PowderRain
3. Rain

The consumption was measured in combination with the appropriate fittings (thermostat/mixer/in-wall valve) to reflect actual application in practice.

Overhead showers

· **Raindance Select S** Hand shower 120 3jet
 # 26530000, 26530140, 26530340, 26530400, 26530670, 26530700, 26530990

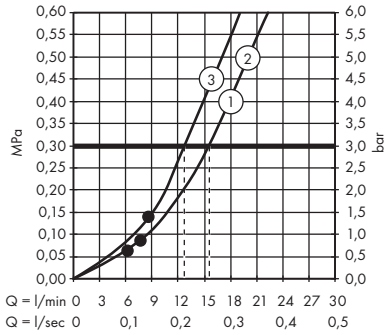

1. RainAir
2. Rain
3. WhirlAir

· **Raindance Select S** Hand shower 120 3jet EcoSmart 9 l/ min
 # 26531000, 26531140, 26531340, 26531670, 26531700, 26531990

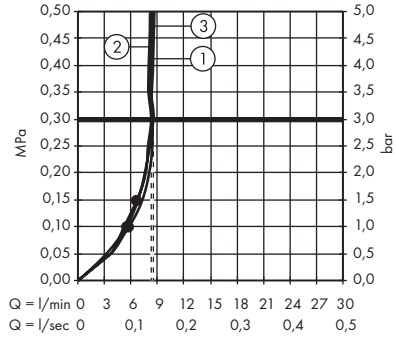

1. RainAir
2. WhirlAir
3. Rain

· **Raindance E** Overhead shower 300 1jet with shower arm
 # 26238000, 26238140, 26238340, 26238670, 26238700, 26238990

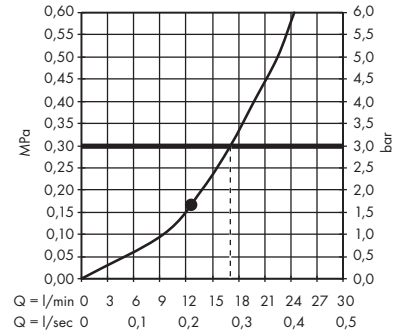

· **Raindance E** Overhead shower 300 1jet EcoSmart 9 l/ min with shower arm
 # 26239000

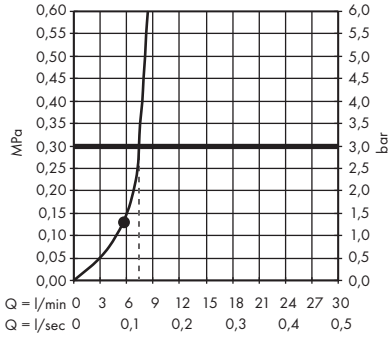

· **Raindance E** Overhead shower 300 1jet with ceiling connector
 # 26250000, 26250140, 26250340, 26250670, 26250700, 26250990

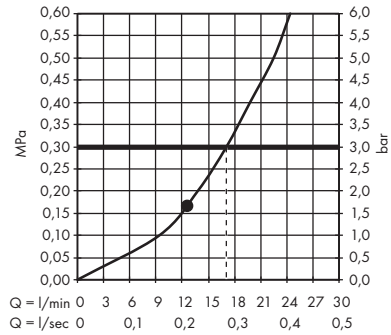

· **Raindance E** Overhead shower 300 1jet EcoSmart 9 l/ min with ceiling connector
 # 26251000

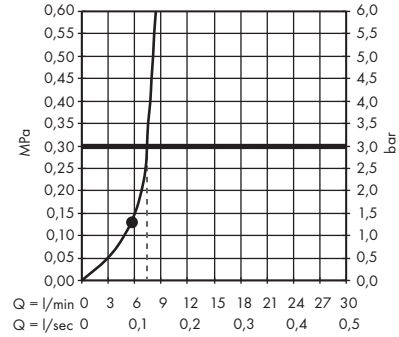

· **Raindance E** Overhead shower 400/400 1jet
 # 26252000

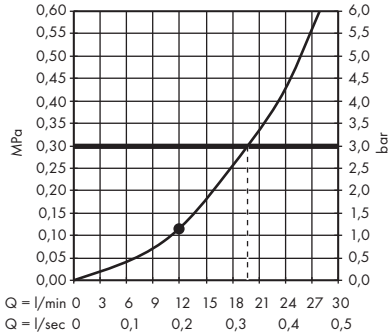

· **Raindance E** Overhead shower 400/400 1jet EcoSmart 9 l/ min
 # 26253000

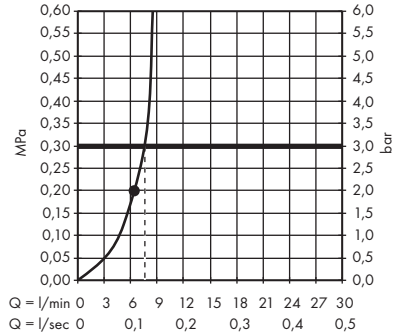

· **Raindance E** Overhead shower 360 1jet with ceiling connector
 # 27381000

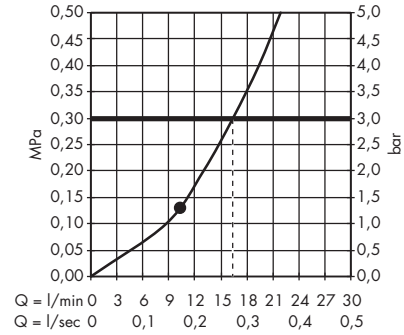

Raindance

The consumption was measured in combination with the appropriate fittings (thermostat/mixer/in-wall valve) to reflect actual application in practice.

· **Raindance E** Overhead shower 360 1jet EcoSmart 9 l/min with ceiling connector
 # 26604000

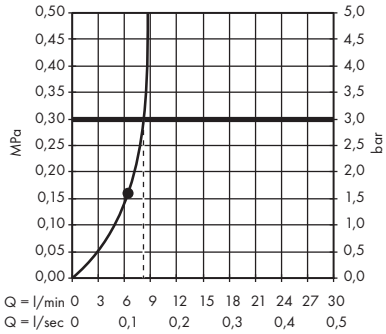

· **Raindance E** Overhead shower 360 1jet with shower arm 24 cm
 # 27371000

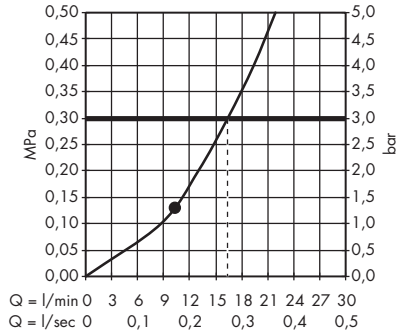

· **Raindance E** Overhead shower 360 1jet with shower arm 39 cm
 # 27376000

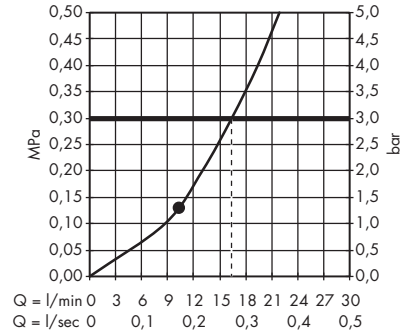

· **Raindance E** Overhead shower 360 1jet EcoSmart 9 l/min with shower arm
 # 26605000

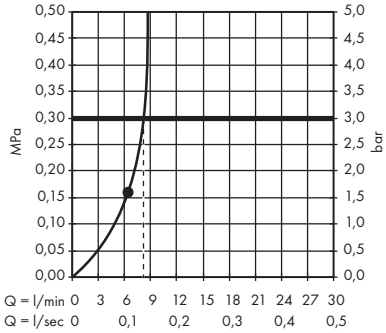

· **Raindance E** Overhead shower 240 1jet with ceiling connector
 # 27380000

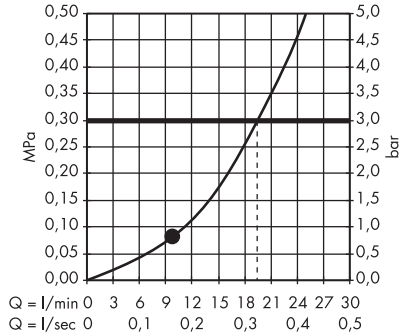

· **Raindance E** Overhead shower 240 1jet with shower arm
 # 27370000

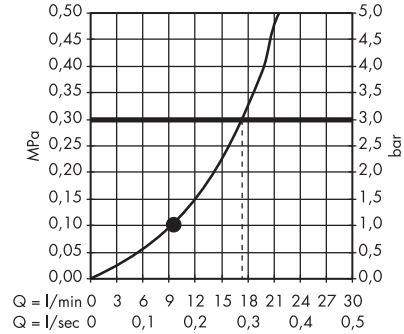

· **Raindance E** Overhead shower 240 1jet EcoSmart 9 l/min with shower arm
 # 27375000

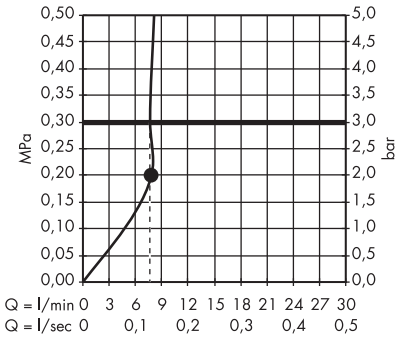

· **Raindance Select S** Overhead shower 300 2jet with ceiling connector
 # 27337400

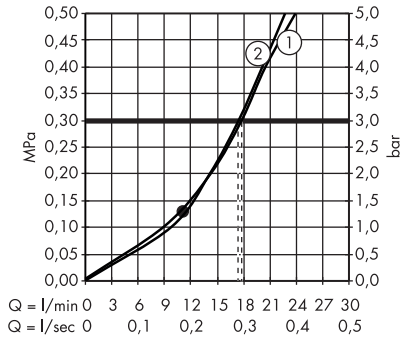

1. Rain
2. RainAir

· **Raindance Select S** Overhead shower 300 2jet with shower arm
 # 27378000, 27378400

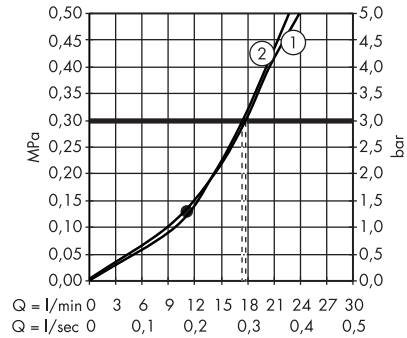

1. Rain
2. RainAir

The consumption was measured in combination with the appropriate fittings (thermostat/mixer/in-wall valve) to reflect actual application in practice.

· **Raindance Select S** Overhead shower 240 2jet with ceiling connector
 # 26467000

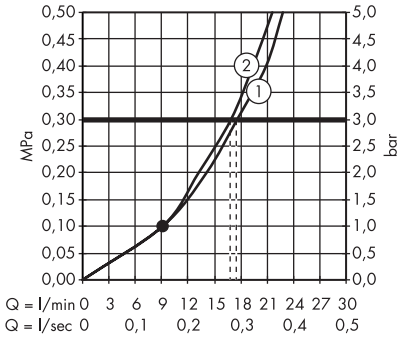

1. Rain
2. RainAir

· **Raindance Select S** Overhead shower 240 2jet EcoSmart 9 l/ min with ceiling connector
 # 26469000

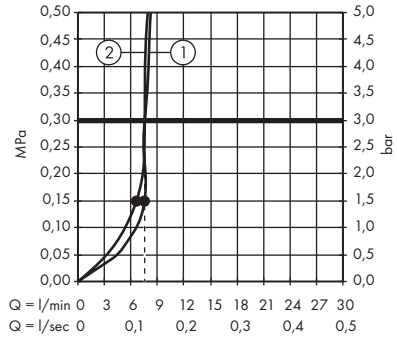

1. Rain
2. RainAir

· **Raindance Select S** Overhead shower 240 2jet with shower arm
 # 26466000

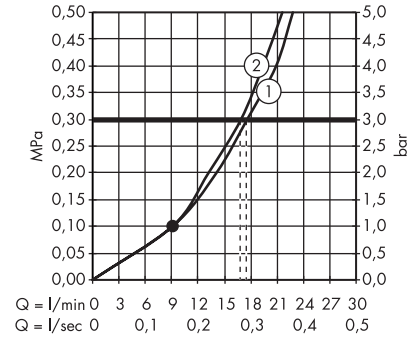

1. Rain
2. RainAir

· **Raindance S** Overhead shower 300 1jet with shower arm 46 cm
 # 27492000

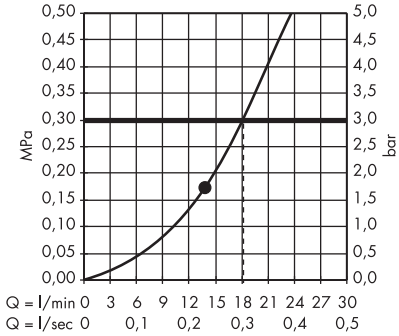

· **Raindance S** Overhead shower 300 1jet with shower arm 39 cm
 # 27493000

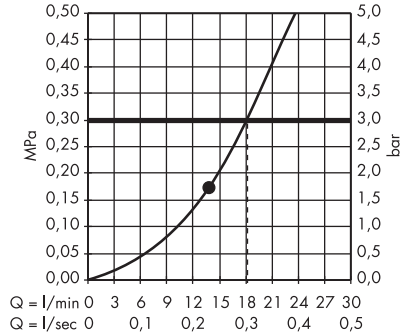

· **Raindance S** Overhead shower 300 1jet EcoSmart 9 l/ min with shower arm
 # 26601000

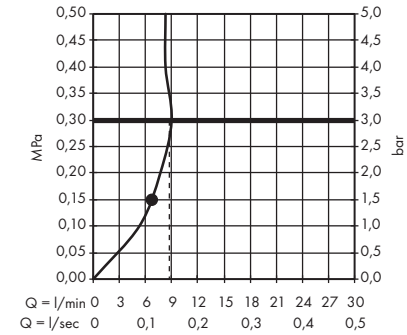

· **Raindance S** Overhead shower 300 1jet with ceiling connector
 # 27494000

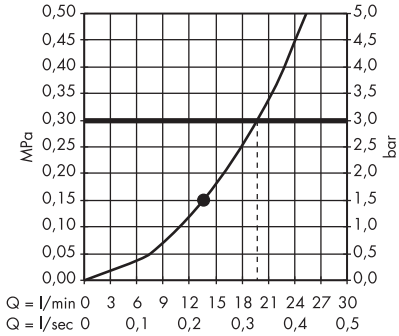

· **Raindance S** Overhead shower 300 1jet EcoSmart 9 l/ min with ceiling connector
 # 26600000

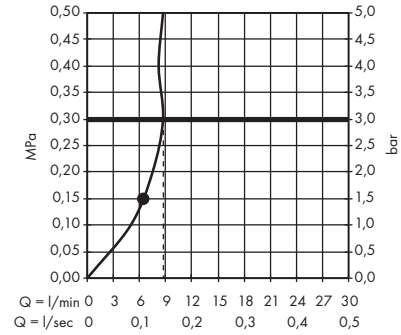

· **Raindance S** Overhead shower 240 1jet PowderRain with shower arm
 # 27607000

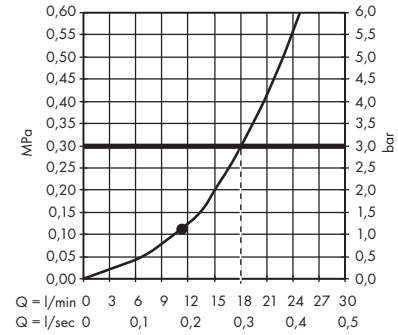

The consumption was measured in combination with the appropriate fittings (thermostat/mixer/in-wall valve) to reflect actual application in practice.

· **Raindance S** Overhead shower 240 1jet PowderRain with ceiling connector
 # 27620000

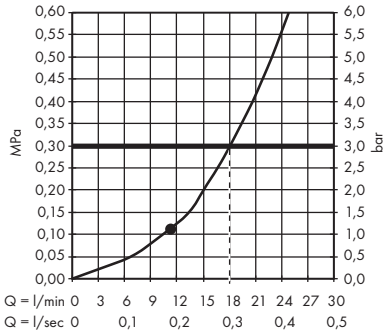

· **Raindance S** Overhead shower 240 1jet PowderRain
 # 27623000, 27623670, 27623700

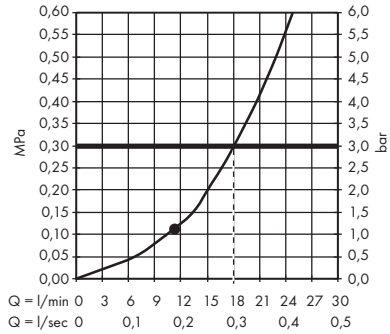

· **Raindance S** Overhead shower 240 1jet with shower arm
 # 27474000

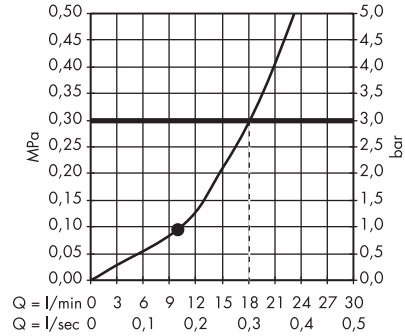

· **Raindance S** Overhead shower 240 1jet EcoSmart 9 l/min with shower arm
 # 27461000

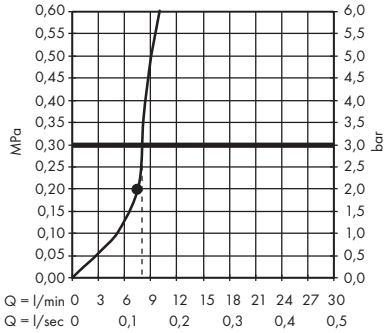

· **Raindance S** Overhead shower 240 1jet with ceiling connector
 # 27477000

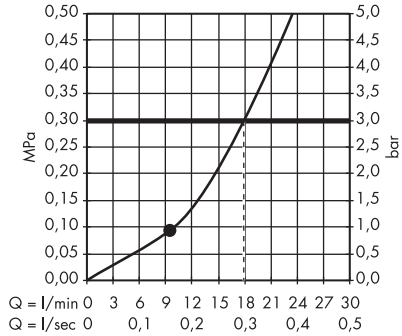

· **Raindance S** Overhead shower 240 1jet EcoSmart 9 l/min with ceiling connector
 # 27463000

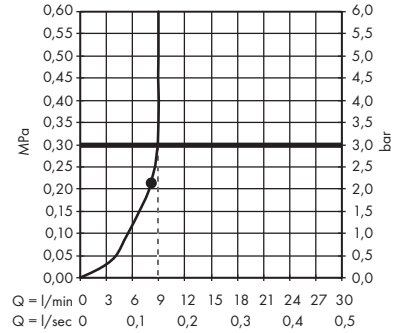

· **Raindance S** Overhead shower 180 1jet with ceiling connector
 # 27478000

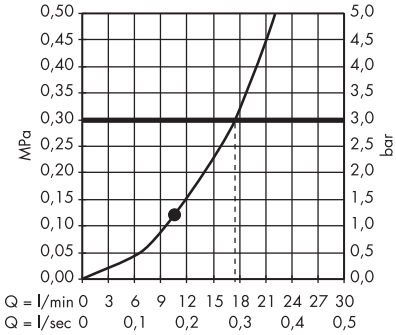

· **Raindance Classic** Overhead shower 240 1jet with ceiling connector
 # 27405000

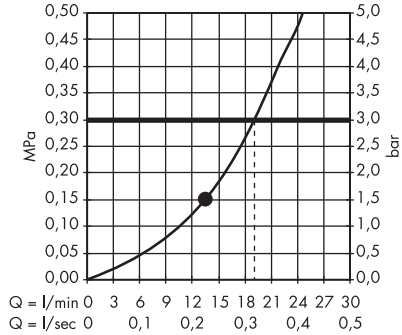

· **Raindance** Overhead shower 260/260 1jet
 # 26472000

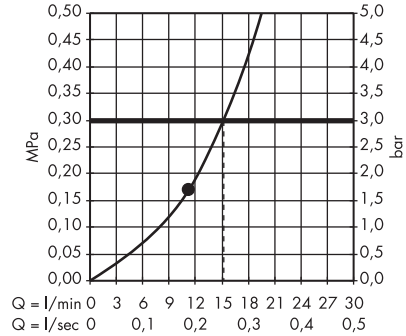

The consumption was measured in combination with the appropriate fittings (thermostat/mixer/in-wall valve) to reflect actual application in practice.

Showerpipes

· **Raindance** Overhead shower 260/260 1jet EcoSmart 9 l/ min
 # 26481000

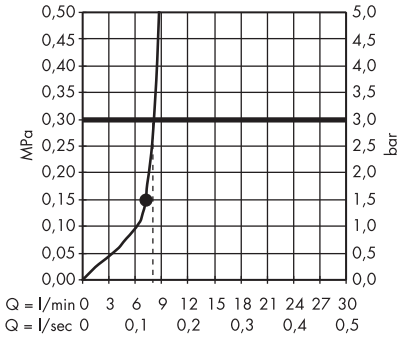

· **Raindance Select E** Showerpipe 300 3jet with ShowerTablet Select 300
 # 27127000, 27127400

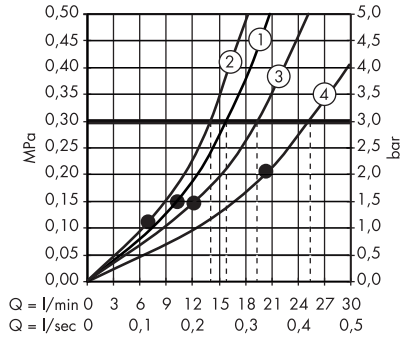

1. Overhead shower Rain / RainAir
2. Hand shower
3. Overhead shower RainStream
4. Overhead shower Rain + RainStream / RainAir + RainStream

· **Raindance Select E** Showerpipe 300 2jet EcoSmart 9 l/ min with ShowerTablet Select 300
 # 27283000

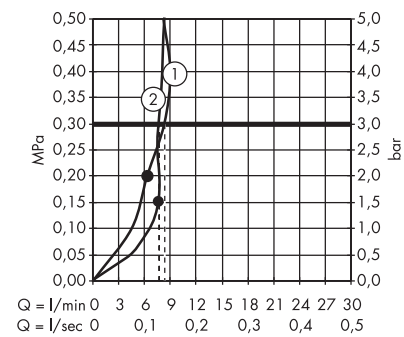

1. Hand shower
2. Overhead shower

· **Raindance E** Showerpipe 360 1jet with thermostat
 # 27112000, 27112400

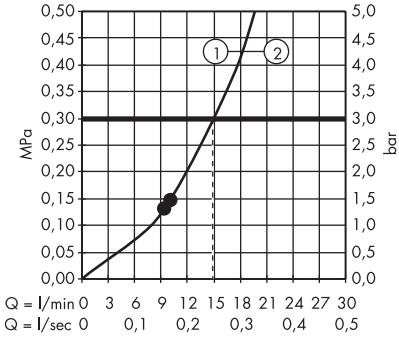

1. Overhead shower
2. Hand shower

· **Raindance E** Showerpipe 360 1jet EcoSmart 9 l/ min with thermostat
 # 27286000, 27286400

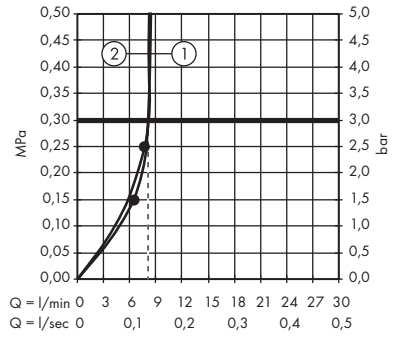

1. Hand shower
2. Overhead shower

· **Raindance E** Showerpipe 360 1jet with bath thermostat
 # 27113000, 27113400

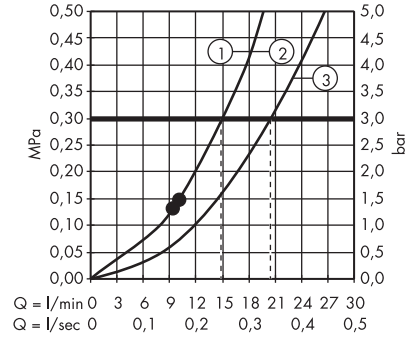

1. Hand shower
2. Overhead shower
3. Bath spout

· **Raindance E** Showerpipe 360 1jet with ShowerTablet Select 300
 # 27288000, 27288400

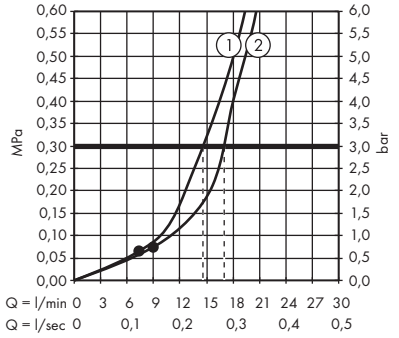

1. Hand shower
2. Overhead shower

· **Raindance E** Showerpipe 300 1jet with ShowerTablet 600
 # 27363000

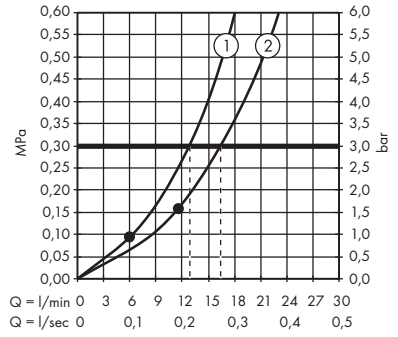

1. Hand shower
2. Overhead shower

· **Raindance E** Showerpipe 300 1jet EcoSmart 9 l/ min with ShowerTablet 600
 # 27364000

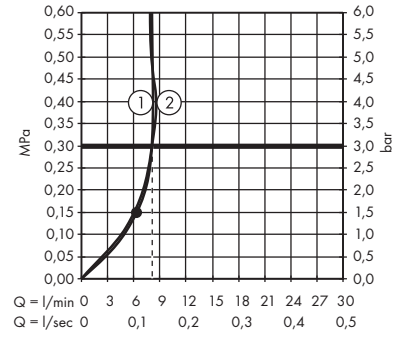

1. Hand shower
2. Overhead shower

Raindance

The consumption was measured in combination with the appropriate fittings (thermostat/mixer/in-wall valve) to reflect actual application in practice.

· **Raindance E** Showerpipe 300 1jet with ShowerTablet 350
 # 27361000

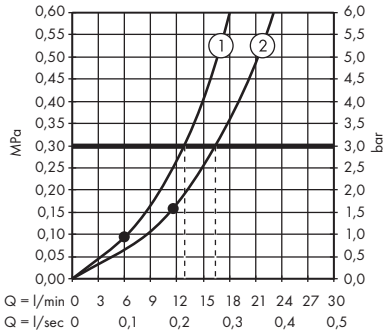

1. Hand shower
2. Overhead shower

· **Raindance E** Showerpipe 300 1jet EcoSmart 9 l/ min with ShowerTablet 350
 # 27362000

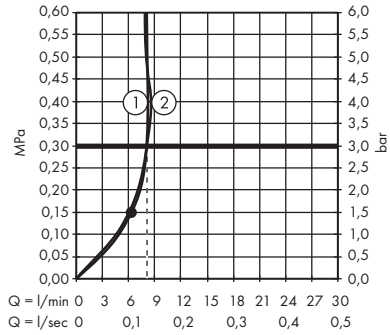

1. Hand shower
2. Overhead shower

· **Raindance Select S** Showerpipe 300 2jet with thermostat
 # 27133400

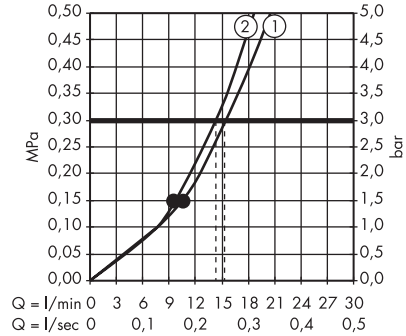

1. Overhead shower
2. Hand shower

· **Raindance Select S** Showerpipe 240 2jet with thermostat
 # 27129000, 27129400

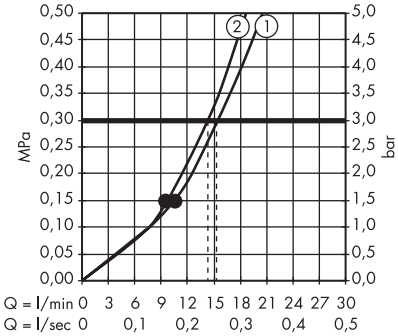

1. Overhead shower
2. Hand shower

· **Raindance Select S** Showerpipe 240 1jet PowderRain with thermostat
 # 27633000, 27633140, 27633340, 27633670, 27633700, 27633990

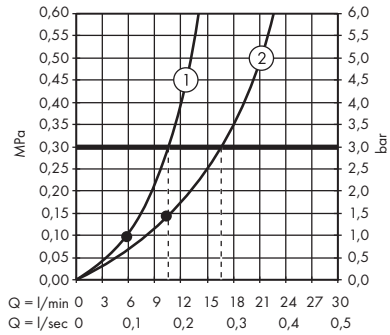

1. Hand shower
2. Overhead shower

· **Raindance S** Showerpipe 300 1jet with thermostat
 # 27114000

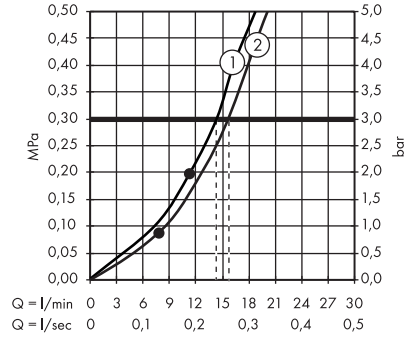

1. Overhead shower
2. Hand shower

· **Raindance S** Showerpipe 240 1jet EcoSmart 9 l/ min with thermostat
 # 27116000

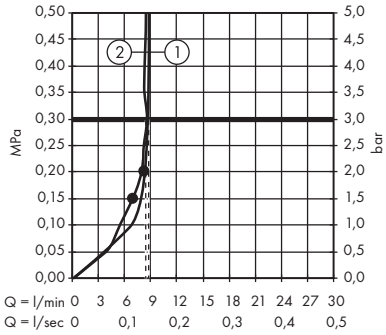

1. Overhead shower
2. Hand shower

· **Raindance S** Showerpipe 240 1jet with bath thermostat
 # 27117000

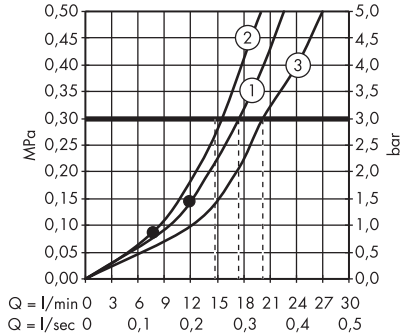

1. Overhead shower
2. Hand shower
3. Bath spout

· **Raindance** Shower panel Lift 180 2jet for exposed installation
 # 27008000, 27008400

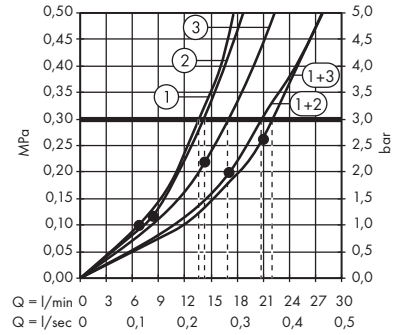

1. Hand shower
2. Rain
3. Rainflow

The consumption was measured in combination with the appropriate fittings (thermostat/mixer/in-wall valve) to reflect actual application in practice.

Hand showers

· **Pulsify Select S** Hand shower 105 3jet Activation
 # 24100000, 24100670, 24100700

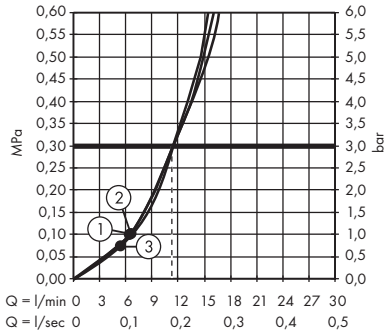

1. Mono
2. PowderRain
3. IntenseRain

· **Pulsify Select S** Hand shower 105 3jet Activation EcoSmart
 # 24101000, 24101670, 24101700

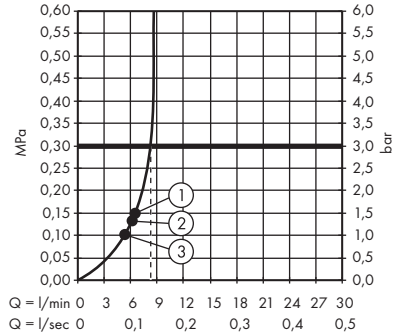

1. PowderRain
2. Mono
3. IntenseRain

· **Pulsify Select S** Hand shower 105 3jet Relaxation
 # 24110000, 24110140, 24110670, 24110700

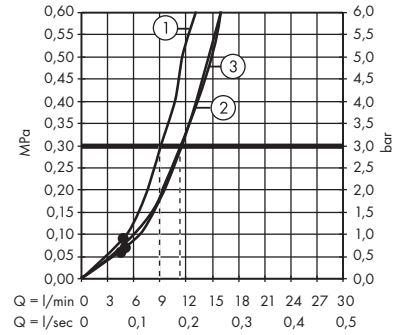

1. Massage
2. PowderRain
3. IntenseRain

· **Pulsify Select S** Hand shower 105 3jet Relaxation EcoSmart
 # 24111000, 24111140, 24111670, 24111700

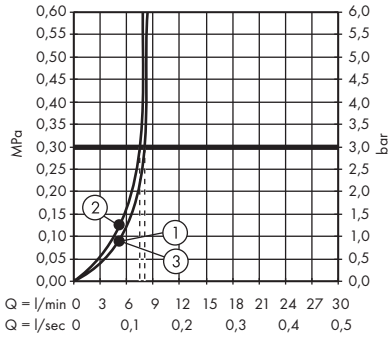

1. PowderRain
2. Massage
3. IntenseRain

· **Pulsify S** Hand shower 105 1jet
 # 24120000, 24120670, 24120700

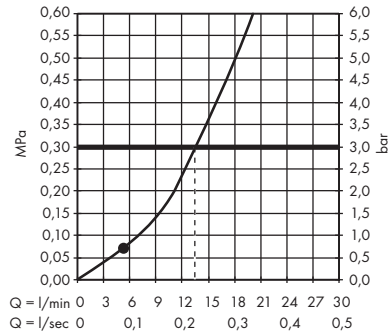

· **Pulsify S** Hand shower 105 1jet EcoSmart+
 # 24121000, 24121670, 24121700

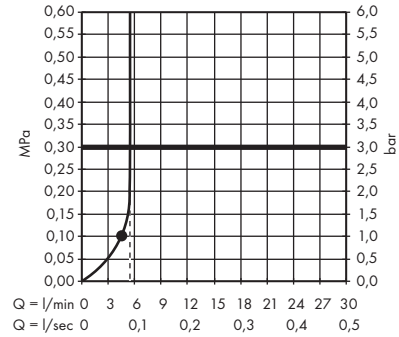

· **Pulsify S** Baton hand shower 100 1jet EcoSmart
 # 24125000, 24125140, 24125670, 24125700

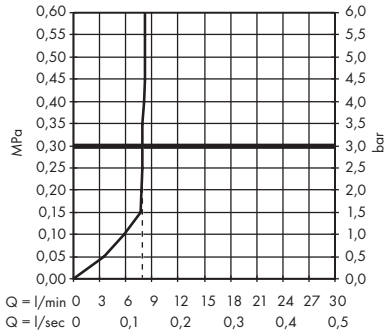

· **Pulsify S** Baton hand shower 100 1jet EcoSmart+
 # 24126000, 24126140, 24126670, 24126700

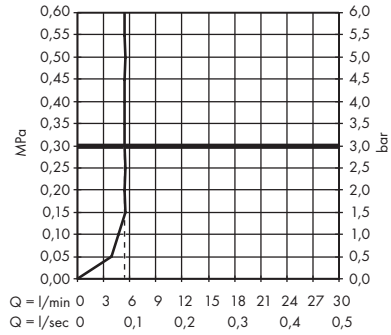

· **Pulsify E** Baton hand shower 100 1jet EcoSmart
 # 24320000, 24320140, 24320670, 24320700

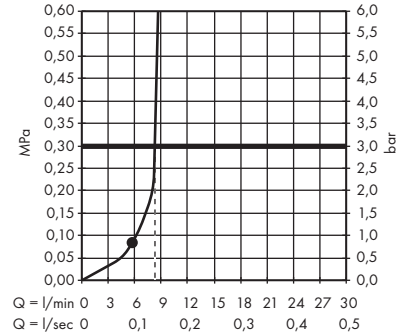

The consumption was measured in combination with the appropriate fittings (thermostat/mixer/in-wall valve) to reflect actual application in practice.

· **Pulsify E** Baton hand shower 100 1jet EcoSmart+
 # 24321000, 24321140, 24321670, 24321700

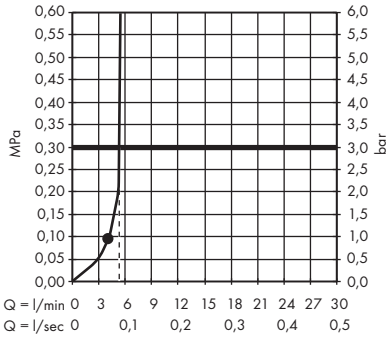

· **Pulsify Planet Edition** Hand shower 105 3jet Relaxation EcoSmart+ Select
 # 26077210

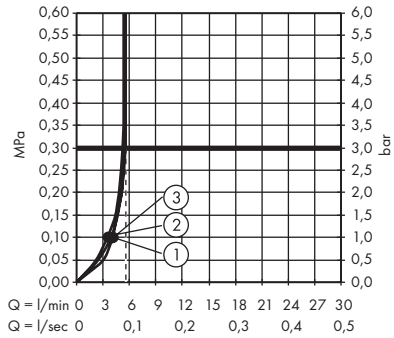

1. PowderRain
2. Massage
3. Intense PowderRain

Overhead showers

· **Pulsify S** Overhead shower 260 2jet with wall connector
 # 24150000, 24150670, 24150700

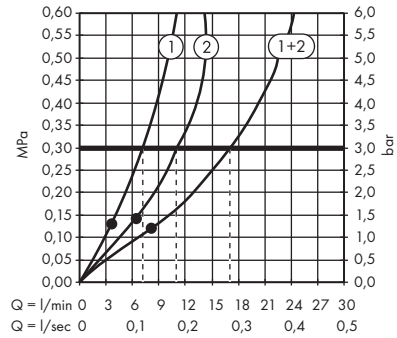

1. Intense PowderRain
2. PowderRain

· **Pulsify S** Overhead shower 260 2jet EcoSmart with wall connector
 # 24151000, 24151670, 24151700

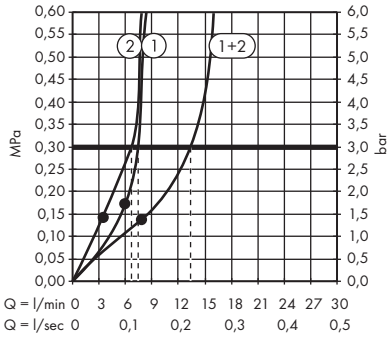

1. PowderRain
2. Intense PowderRain

· **Pulsify S** Overhead shower 260 1jet
 # 24140000, 24140140, 24140670, 24140700

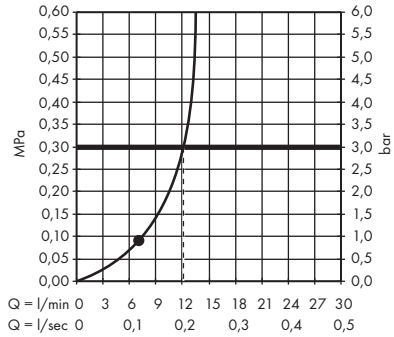

· **Pulsify S** Overhead shower 260 1jet EcoSmart
 # 24141000, 24141140, 24141670, 24141700

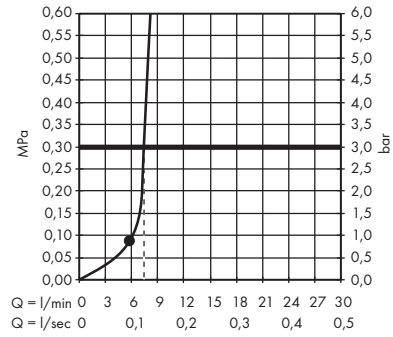

· **Pulsify S** Overhead shower 105 1jet
 # 24130000, 24130140, 24130670, 24130700

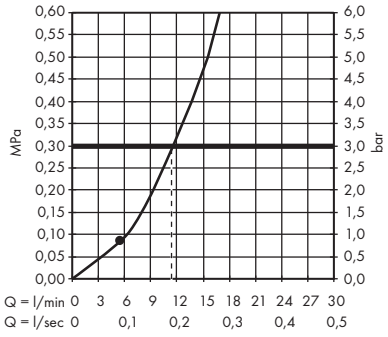

· **Pulsify S** Overhead shower 105 1jet EcoSmart+
 # 24132000, 24132670, 24132700

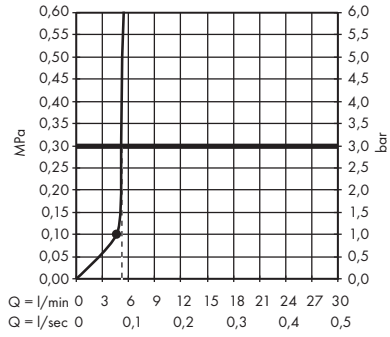

· **Pulsify E** Overhead shower 260 1jet
 # 24330000, 24330140, 24330670, 24330700

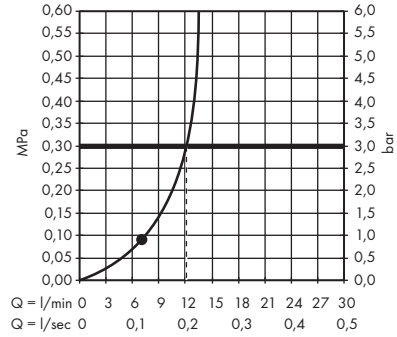

The consumption was measured in combination with the appropriate fittings (thermostat/mixer/in-wall valve) to reflect actual application in practice.

· **Pulsify E** Overhead shower 260 1jet EcoSmart
 # 24331000, 24331140, 24331670, 24331700

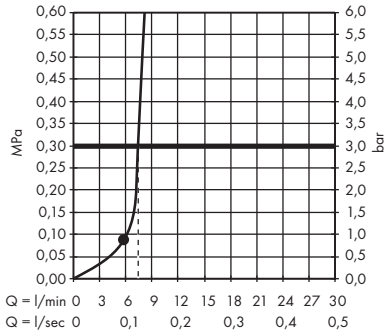

· **Pulsify E** Overhead shower 260 1jet EcoSmart+
 # 24333000, 24333140, 24333670, 24333700

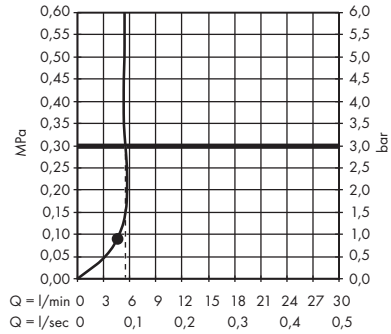

· **Pulsify E** Overhead shower 260 2jet with wall connector
 # 24350000, 24350670, 24350700

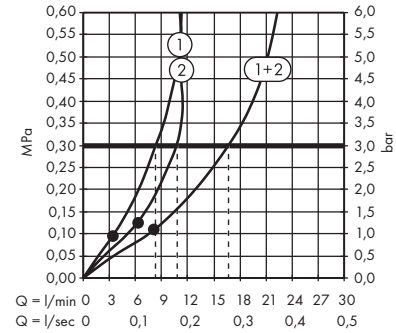

1. Intense PowderRain
2. PowderRain

· **Pulsify E** Overhead shower 260 2jet EcoSmart with wall connector
 # 24351000, 24351670, 24351700

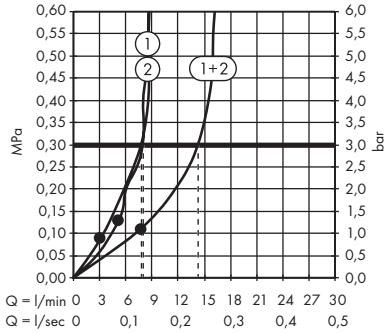

1. PowderRain
2. Intense PowderRain

Showerpipes

· **Pulsify S** Showerpipe 260 2jet with ShowerTablet Select 400
 # 24240000, 24240140, 24240670, 24240700

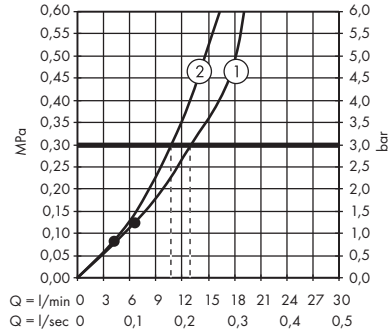

1. Overhead shower
2. Hand shower

· **Pulsify S** Showerpipe 260 2jet EcoSmart with ShowerTablet Select 400
 # 24241000, 24241140, 24241670, 24241700

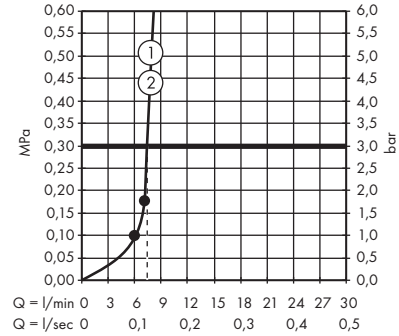

1. Overhead shower
2. Hand shower

· **Pulsify S** Showerpipe 260 1jet with ShowerTablet Select 400
 # 24220000, 24220140, 24220670, 24220700

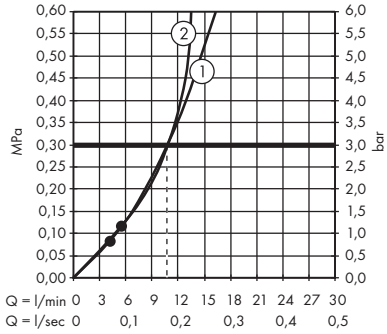

1. Hand shower
2. Overhead shower

· **Pulsify S** Showerpipe 260 1jet EcoSmart with ShowerTablet Select 400
 # 24221000, 24221140, 24221670, 24221700

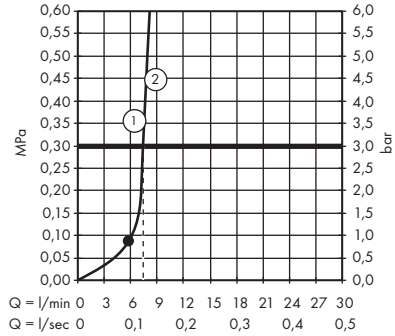

1. Overhead shower
2. Hand shower

· **Pulsify S** Showerpipe 260 1jet with bath thermostat ShowerTablet 400
 # 24230000

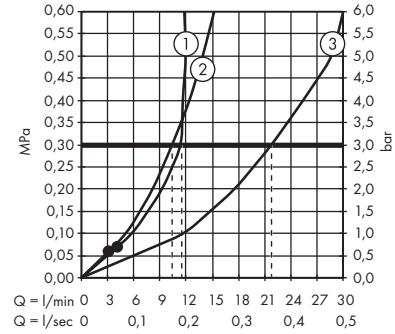

1. Overhead shower
2. Hand shower
3. Bath spout

The consumption was measured in combination with the appropriate fittings (thermostat/mixer/in-wall valve) to reflect actual application in practice.

Hand showers

· **Croma 100** Hand shower Multi
 # 28536000, 28536430, 28536450, 28536460, 28536710, 28536810, 28536880

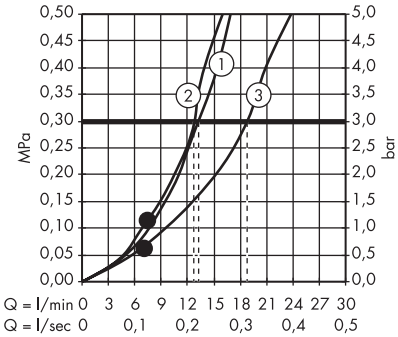

1. Mono
2. Massage
3. Rain

· **Croma 100** Hand shower Vario
 # 28535000

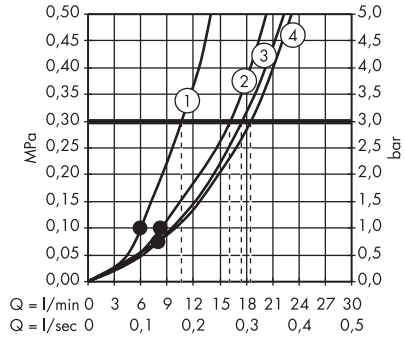

1. Massage
2. Shampoo
3. Normal
4. Rain

· **Croma 100** Hand shower Vario EcoSmart 9 l/ min
 # 28537000

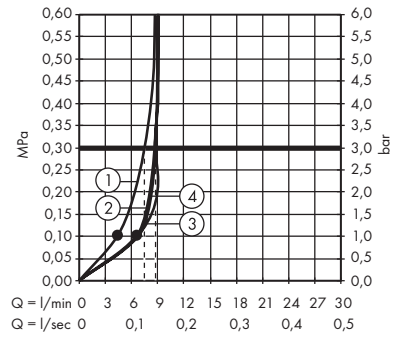

1. Massage
2. Shampoo
3. Normal
4. Rain

· **Croma 100** Overhead shower Vario
 # 27441000

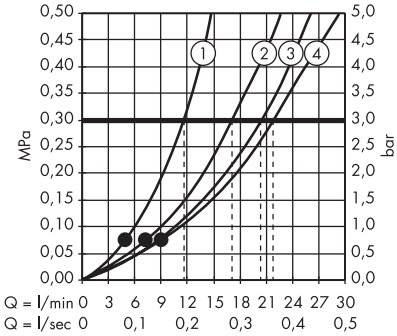

1. Massage
2. Shampoo
3. Normal
4. Rain

The consumption was measured in combination with the appropriate fittings (thermostat/mixer/in-wall valve) to reflect actual application in practice.

Hand showers

· **Croma Select E** Hand shower 110 Multi
 # 26810400

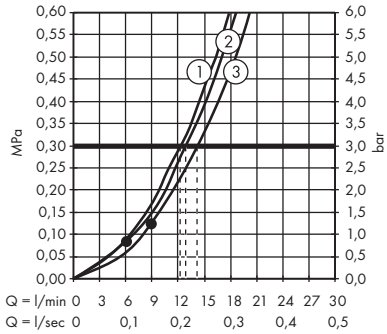

1. Massage
2. IntenseRain
3. SoftRain

· **Croma Select E** Hand shower 110 Multi EcoSmart 9 l/ min
 # 26811400

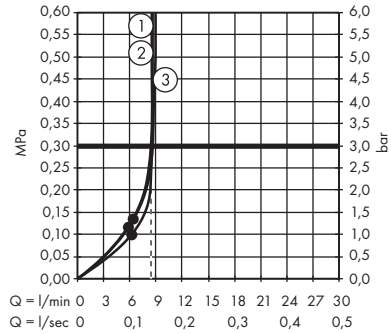

1. IntenseRain
2. Massage
3. SoftRain

· **Croma Select E** Hand shower 110 Vario
 # 26812400

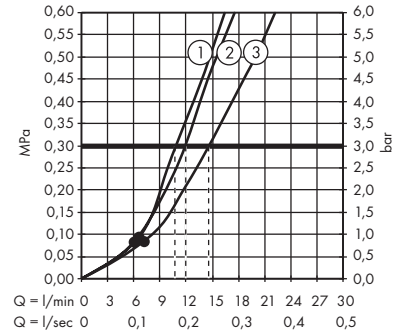

1. TurboRain
2. IntenseRain
3. Rain

· **Croma Select E** Hand shower 110 Vario EcoSmart 9 l/ min
 # 26813400

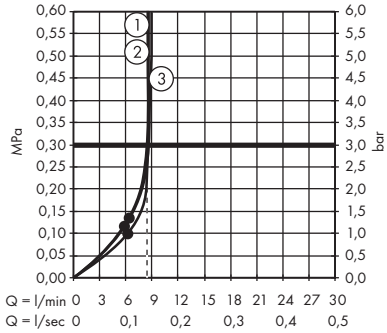

1. TurboRain
2. IntenseRain
3. Rain

· **Croma E** Hand shower 110 1jet
 # 26814140, 26814340, 26814400, 26814670, 26814700, 26814990

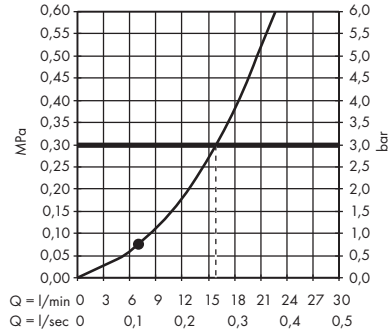

· **Croma E** Hand shower 110 1jet EcoSmart 9 l/ min
 # 26815340, 26815400, 26815670, 26815700, 26815990

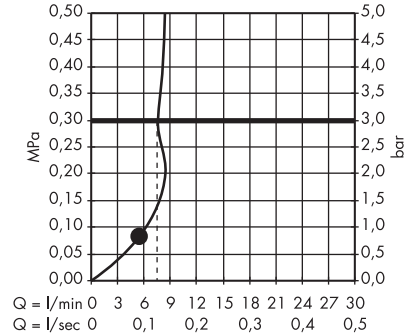

· **Croma E** Hand shower 110 1jet EcoSmart 7 l/ min
 # 26816400

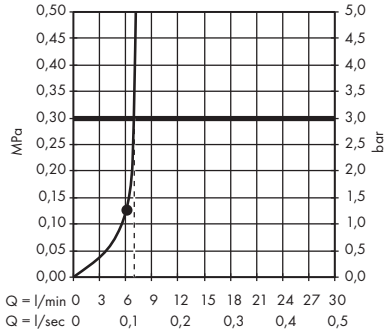

· **Croma Select S** Hand shower 110 Multi
 # 26800400

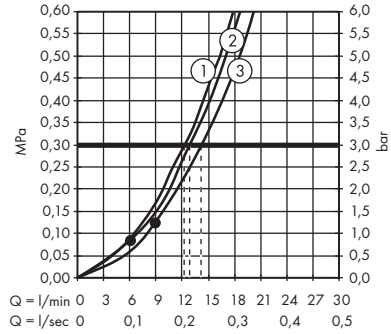

1. Massage
2. IntenseRain
3. SoftRain

· **Croma Select S** Hand shower 110 Multi EcoSmart 9 l/ min
 # 26801400

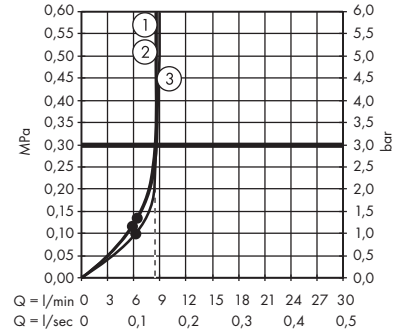

1. IntenseRain
2. Massage
3. SoftRain

The consumption was measured in combination with the appropriate fittings (thermostat/mixer/in-wall valve) to reflect actual application in practice.

· **Croma Select S** Hand shower 110 Vario
 # 26802400

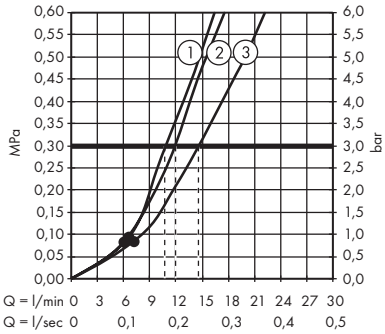

1. TurboRain
2. IntenseRain
3. Rain

· **Croma Select S** Hand shower 110 Vario EcoSmart 9 l/min
 # 26803400

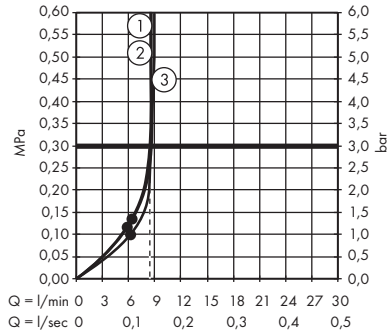

1. TurboRain
2. IntenseRain
3. Rain

· **Croma S** Hand shower 110 1jet
 # 26804400

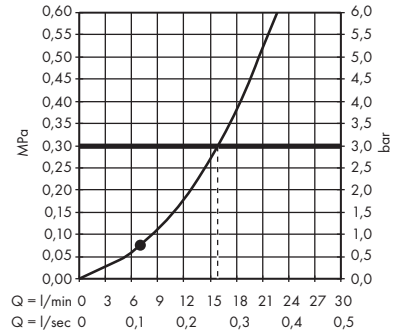

· **Croma S** Hand shower 110 1jet EcoSmart 9 l/min
 # 26805400

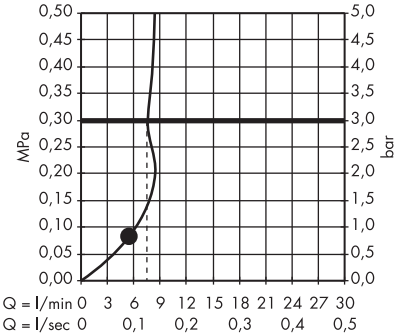

· **Croma S** Hand shower 110 1jet EcoSmart 7 l/min
 # 26806400

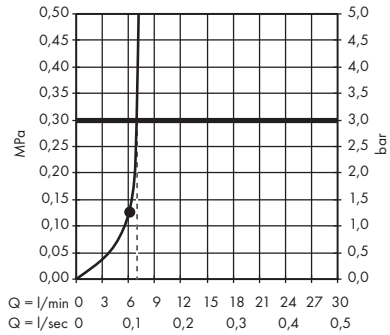

Overhead showers

· **Croma Select E** Overhead shower 180 2jet
 # 26524000, 26524400

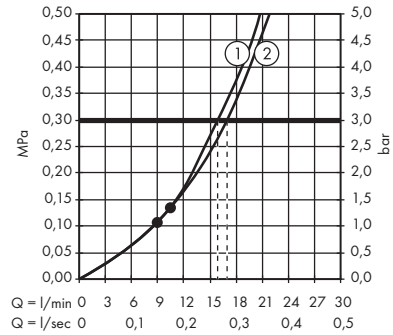

1. IntenseRain
2. Rain

· **Croma Select E** Overhead shower 180 2jet EcoSmart 9 l/min
 # 26528400

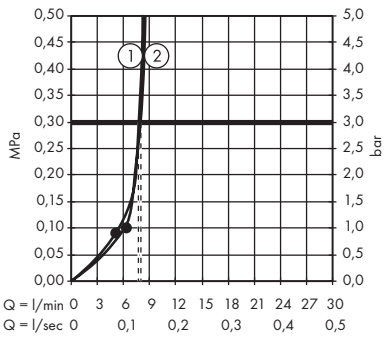

1. IntenseRain
2. Rain

· **Croma E** Overhead shower 280 1jet
 # 26257000

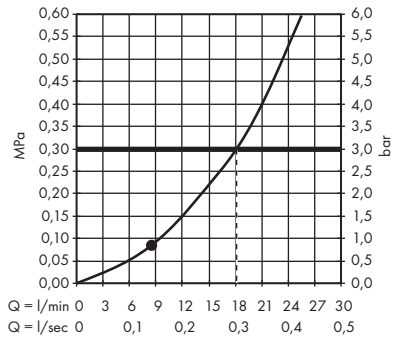

· **Croma E** Overhead shower 280 1jet EcoSmart
 # 26258000

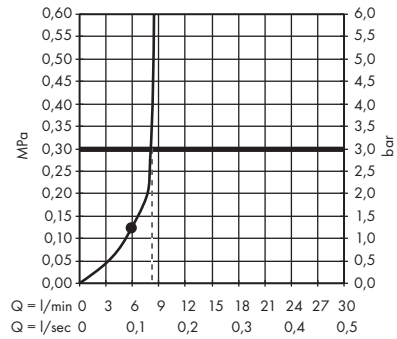

The consumption was measured in combination with the appropriate fittings (thermostat/mixer/in-wall valve) to reflect actual application in practice.

· **Croma Select S** Overhead shower 180 2jet
 # 26522000

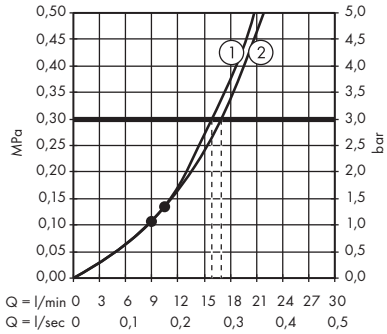

1. IntenseRain
2. Rain

· **Croma** Overhead shower 280 1jet
 # 26220000, 26220140, 26220340, 26220670, 26220700, 26220990

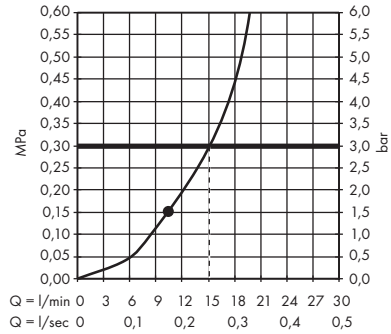

· **Croma** Overhead shower 280 1jet EcoSmart 9 l/min
 # 26221000, 26221140, 26221340, 26221670, 26221700, 26221990

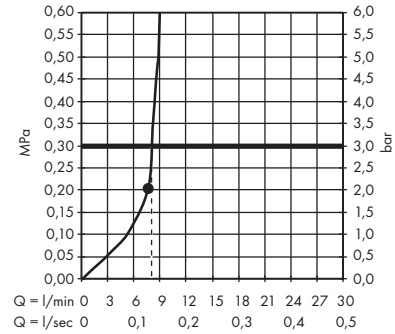

· **Croma** Overhead shower 220 1jet
 # 26464000

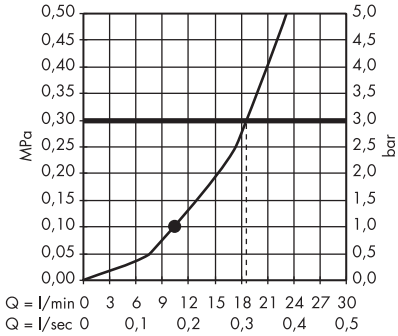

· **Croma** Overhead shower 220 1jet EcoSmart 9 l/min
 # 26465000

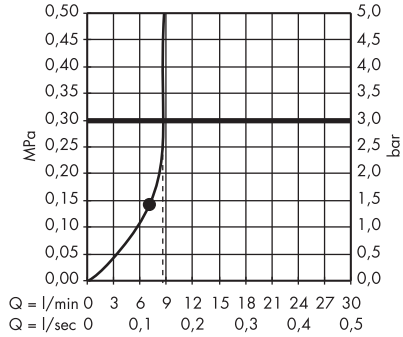

Showerpipes

· **Croma Select E** SemiPipe Multi with thermostat
 # 27248400

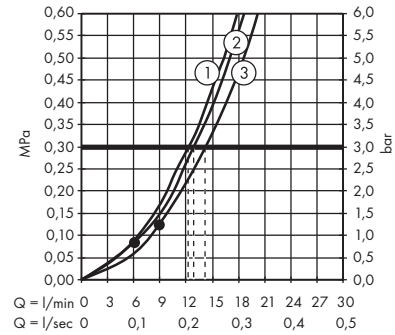

1. Massage
2. IntenseRain
3. SoftRain

· **Croma E** Showerpipe 280 1jet with thermostat Ecostat E
 # 27630000

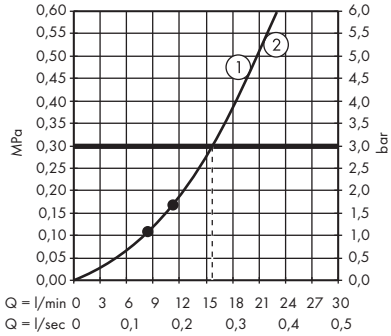

1. Hand shower
2. Overhead shower

· **Croma E** Showerpipe 280 1jet EcoSmart with thermostat
 # 27660000

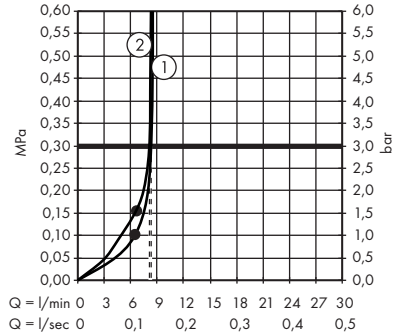

1. Hand shower
2. Overhead shower

· **Croma E** Showerpipe 280 1jet with bath thermostat
 # 27687000

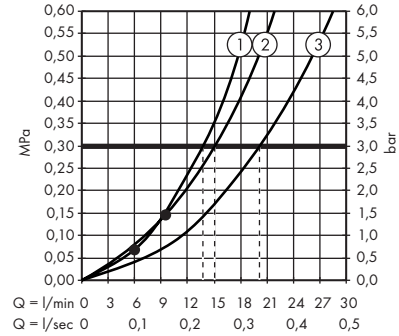

1. Hand shower
2. Overhead shower
3. Bath spout

The consumption was measured in combination with the appropriate fittings (thermostat/mixer/in-wall valve) to reflect actual application in practice.

· **Croma Select S** Showerpipe 280 1jet with thermostat
 # 26790000

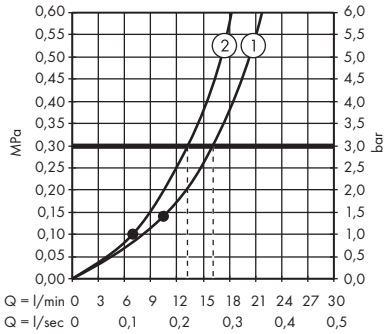

1. Overhead shower
2. Hand shower

· **Croma Select S** Showerpipe 280 1jet EcoSmart 9 l/min with thermostat
 # 26794000

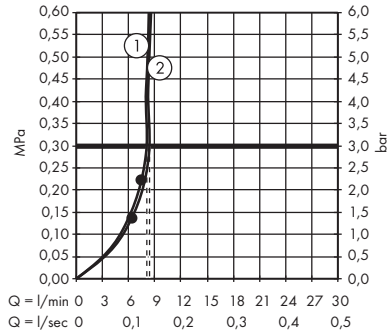

1. Overhead shower
2. Hand shower

· **Croma Select S** Showerpipe 280 1jet with thermostat and hand shower Raindance Select S 120 3jet
 # 26890140, 26890340, 26890670, 26890700, 26890990

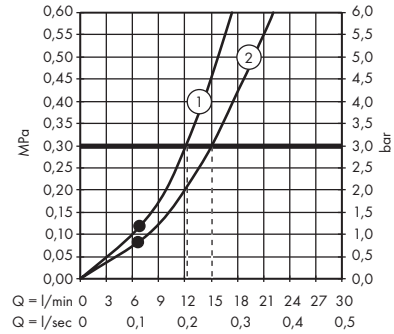

1. Overhead shower
2. Hand shower

· **Croma Select S** Showerpipe 280 1jet EcoSmart 9 l/min with thermostat and hand shower Raindance Select S 120 3jet
 # 26891140, 26891340, 26891670, 26891700, 26891990

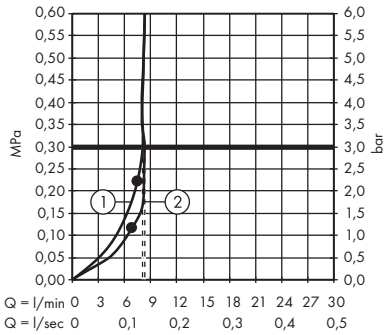

1. Overhead shower
2. Hand shower

· **Croma Select S** Showerpipe 280 1jet with bath thermostat
 # 26792000

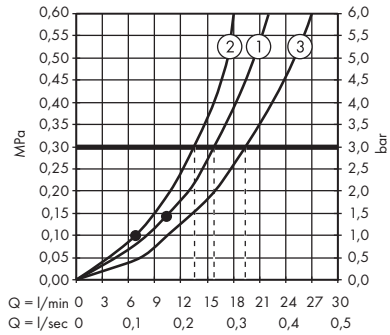

1. Overhead shower
2. Hand shower
3. Bath spout

· **Croma Select S** Showerpipe 280 1jet with single lever mixer
 # 26791000

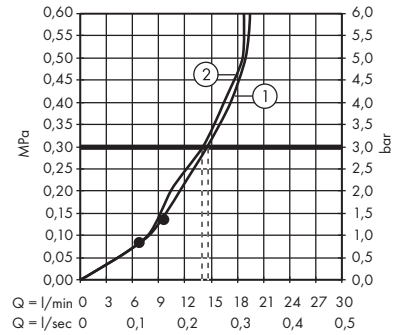

1. Overhead shower
2. Hand shower

· **Croma Select S** Showerpipe 280 1jet Reno
 # 26793000

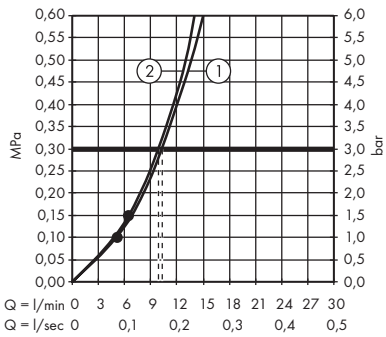

1. Hand shower
2. Overhead shower

· **Croma Select S** SemiPipe Multi with thermostat
 # 27247400

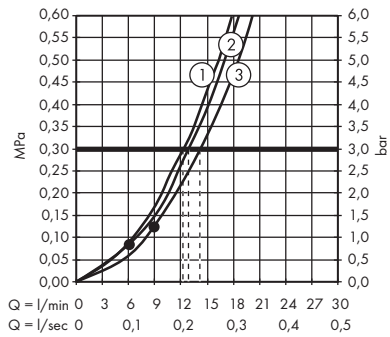

1. Massage
2. IntenseRain
3. SoftRain

· **Croma** Showerpipe 220 1jet with thermostat
 # 27185000

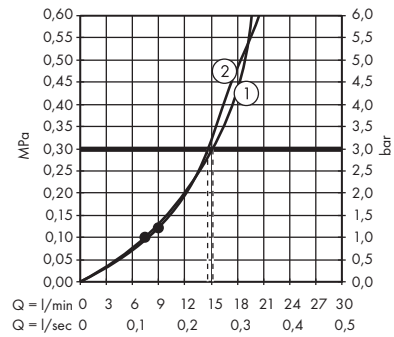

1. Overhead shower
2. Hand shower

The consumption was measured in combination with the appropriate fittings (thermostat/mixer/in-wall valve) to reflect actual application in practice.

· **Croma** Showerpipe 220 1jet EcoSmart 9 l/min with thermostat
 # 27188000

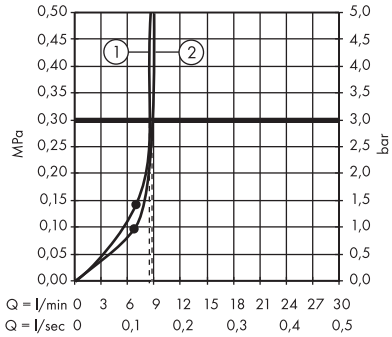

1. Overhead shower
2. Hand shower

· **Croma** Showerpipe 220 1jet with bath thermostat
 # 27223000

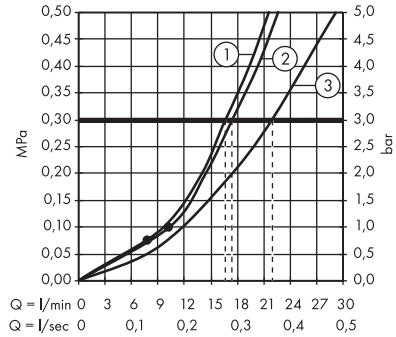

1. Overhead shower
2. Hand shower
3. Bath spout

· **Croma** Showerpipe 220 1jet with single lever mixer
 # 27222000

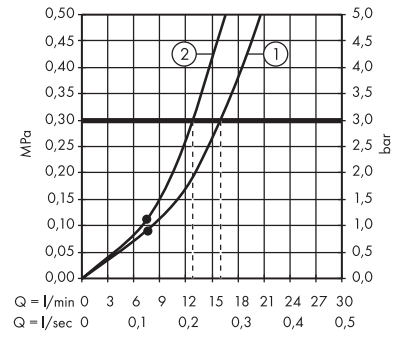

1. Overhead shower
2. Hand shower

· **Croma** Showerpipe 220 1jet Reno
 # 27224000

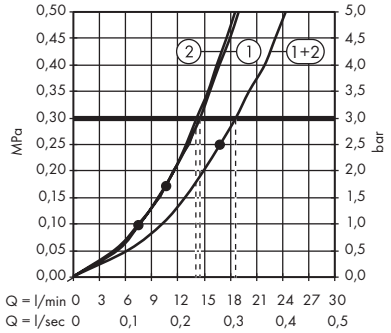

1. Hand shower
2. Overhead shower

The consumption was measured in combination with the appropriate fittings (thermostat/mixer/in-wall valve) to reflect actual application in practice.

Hand showers

· **Crometta** Hand shower 100 Vario
 # 26330400

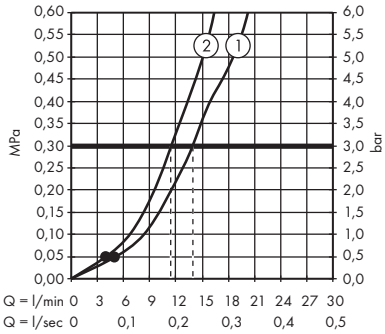

1. Rain
2. IntenseRain

· **Crometta** Hand shower 100 Vario EcoSmart 9 l/ min
 # 26332400

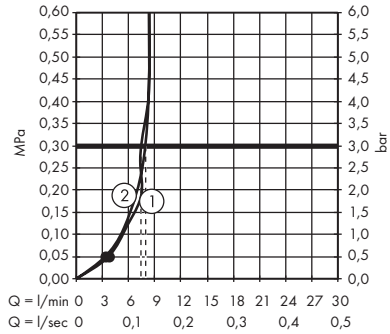

1. Rain
2. IntenseRain

· **Crometta** Hand shower 100 Vario Green 6 l/ min
 # 26336400

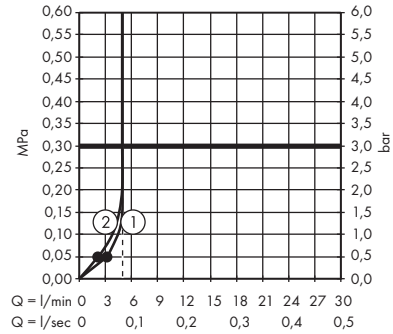

1. Rain
2. IntenseRain

· **Crometta** Hand shower 100 1jet
 # 26331400

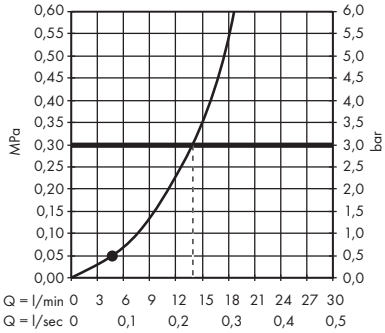

· **Crometta** Hand shower 100 1jet EcoSmart 9 l/ min
 # 26333400

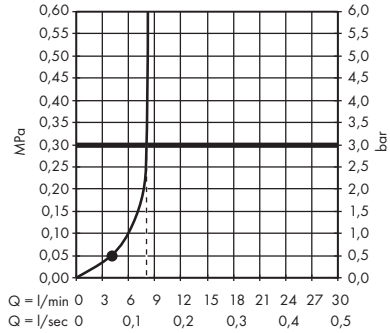

· **Crometta** Hand shower 100 1jet Green 6 l/ min
 # 26334400

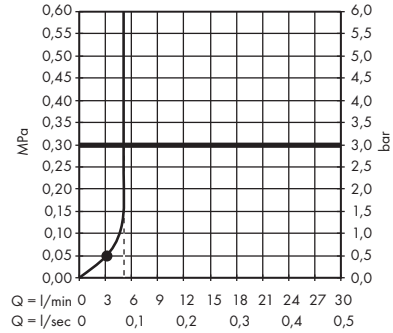

Overhead showers

· **Crometta E** Overhead shower 240 1jet
 # 26726000, 26726670

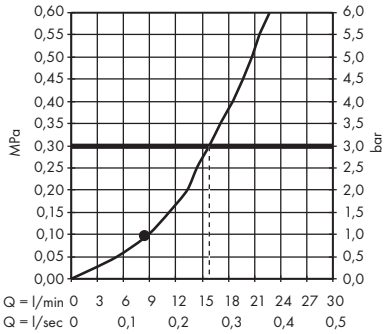

· **Crometta E** Overhead shower 240 1jet EcoSmart 9 l/ min
 # 26727000, 26727670

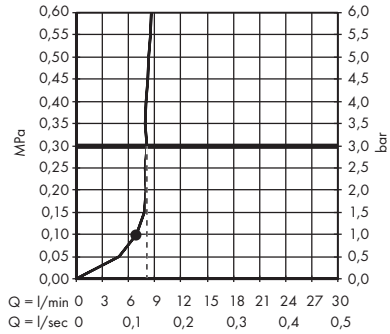

· **Crometta E** Overhead shower 240 1jet LowPressure
 # 26722000

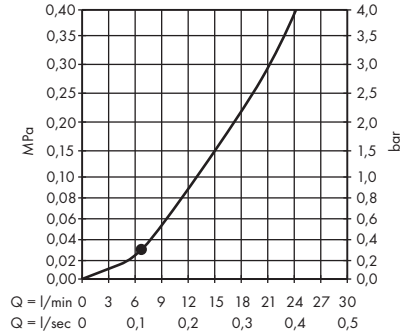

The consumption was measured in combination with the appropriate fittings (thermostat/mixer/in-wall valve) to reflect actual application in practice.

· **Crometta S** Overhead shower 240 1jet
 # 26723000, 26723670

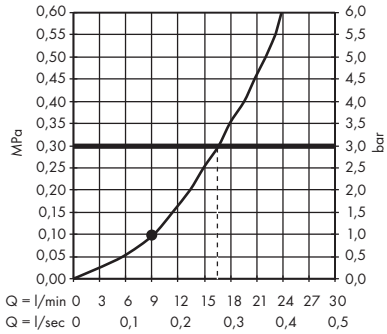

· **Crometta S** Overhead shower 240 1jet EcoSmart 9 l/ min
 # 26724000, 26724670

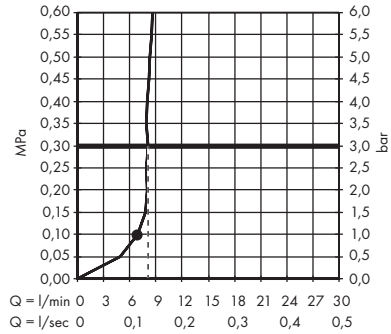

· **Crometta S** Overhead shower 240 1jet LowPressure
 # 26725000

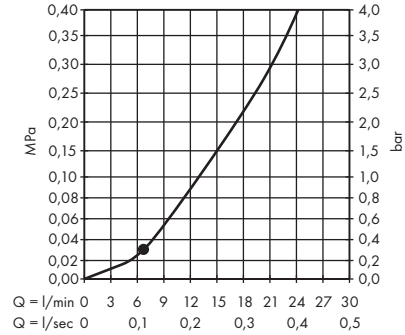

Showerpipes

· **Crometta E** Showerpipe 240 1jet with thermostat
 # 27271000

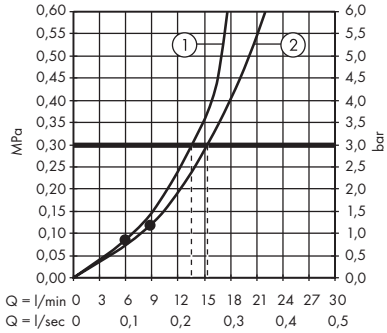

1. Hand shower
2. Overhead shower

· **Crometta E** Showerpipe 240 1jet EcoSmart with thermostat
 # 27281000

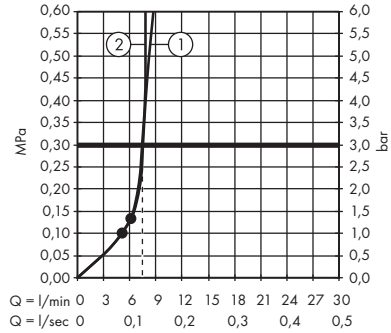

1. Hand shower
2. Overhead shower

· **Crometta E** Showerpipe 240 1jet with bath thermostat
 # 27298000

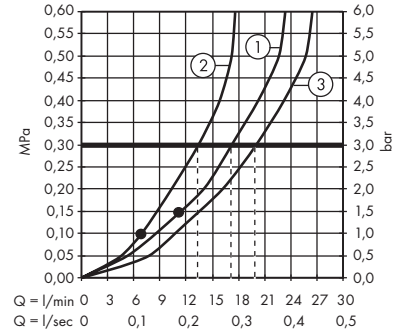

1. Overhead shower
2. Hand shower
3. Bath spout

· **Crometta E** Showerpipe 240 1jet with single lever mixer
 # 27284000

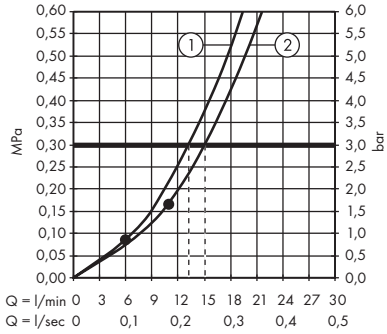

1. Hand shower
2. Overhead shower

· **Crometta E** Showerpipe 240 1jet EcoSmart 9 l/ min Reno
 # 27289000

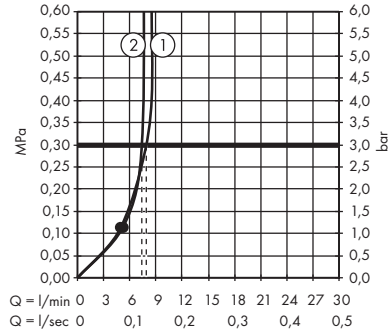

1. Hand shower
2. Overhead shower

· **Crometta S** Showerpipe 240 1jet with thermostat
 # 27267000

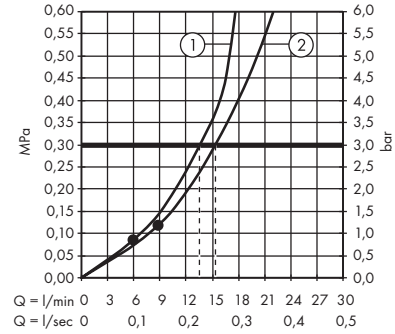

1. Hand shower
2. Overhead shower

The consumption was measured in combination with the appropriate fittings (thermostat/mixer/in-wall valve) to reflect actual application in practice.

· **Crometta S** Showerpipe 240 1jet EcoSmart with thermostat
 # 27268000

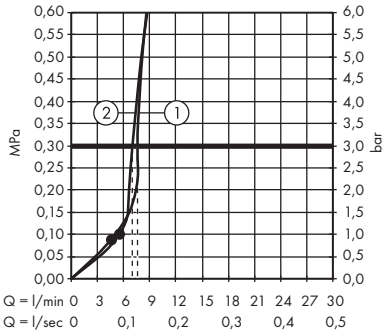

1. Hand shower
2. Overhead shower

· **Crometta S** Showerpipe 240 1jet with bath thermostat
 # 27320000

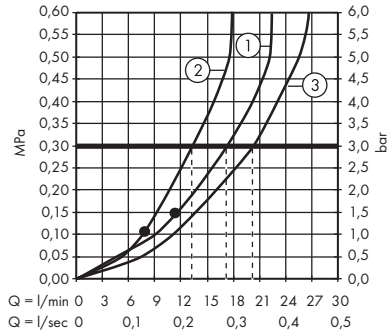

1. Overhead shower
2. Hand shower
3. Bath spout

· **Crometta S** Showerpipe 240 1jet with single lever mixer
 # 27269000

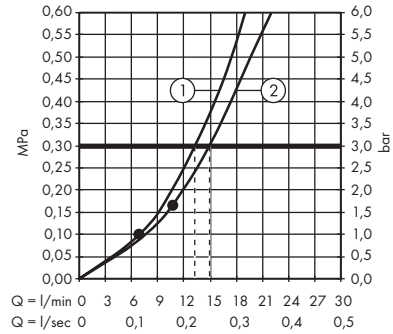

1. Hand shower
2. Overhead shower

· **Crometta S** Showerpipe 240 1jet EcoSmart 9 l/ min Reno
 # 27270000

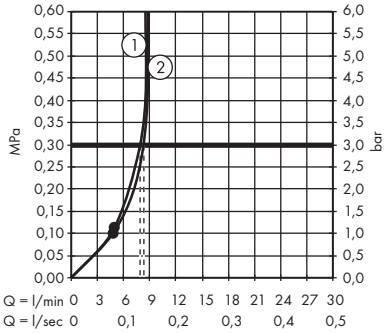

1. Hand shower
2. Overhead shower

The consumption was measured in combination with the appropriate fittings (thermostat/mixer/in-wall valve) to reflect actual application in practice.

Hand showers

· **Crometta 85** Hand shower Multi
 # 28563000

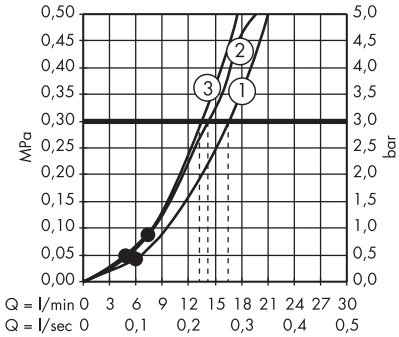

1. Normal
2. Massage
3. Mono

· **Crometta 85** Hand shower Vario
 # 28562000

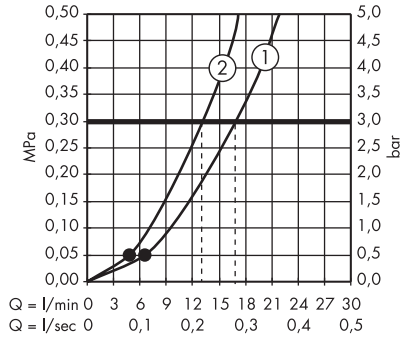

1. Normal
2. Vario

· **Crometta 85** Hand shower Mono
 # 28585000

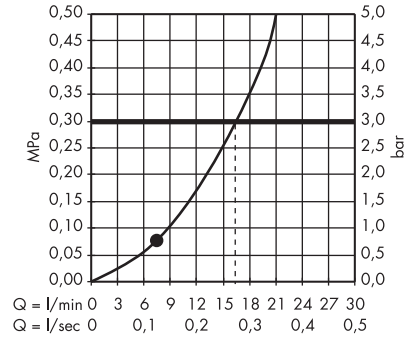

· **Crometta 85** Overhead shower 1jet Green 6 l/min
 # 28423000

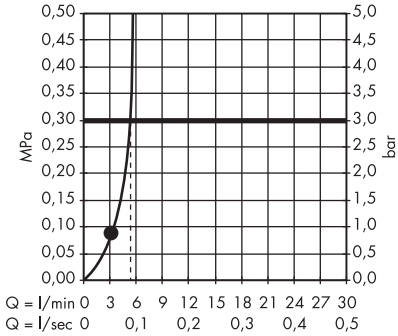

The consumption was measured in combination with the appropriate fittings (thermostat/mixer/in-wall valve) to reflect actual application in practice.

Hand showers

· **Vernis Blend** Hand shower 100 Vario
 # 26270000, 26270670

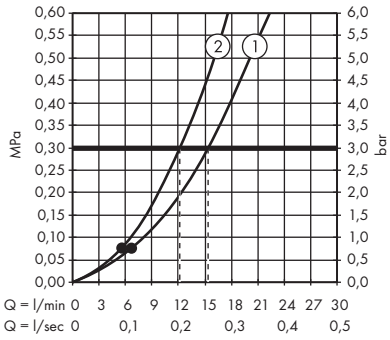

1. Rain
2. IntenseRain

· **Vernis Blend** Hand shower 100 Vario EcoSmart
 # 26340000, 26340670

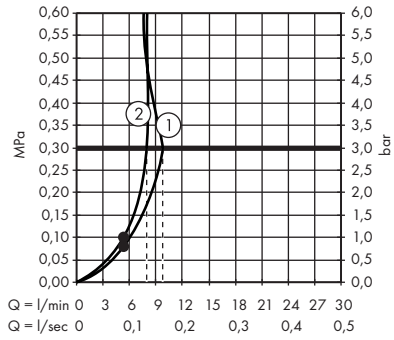

1. Rain
2. IntenseRain

· **Vernis Blend** Hand shower 100 Vario Green
 # 26090000

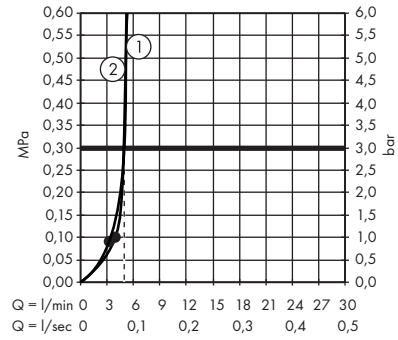

1. Rain
2. IntenseRain

Overhead showers

· **Vernis Blend** Overhead shower 200 1jet
 # 26271000, 26271670

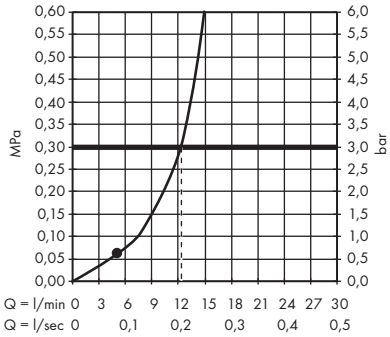

· **Vernis Blend** Overhead shower 200 1jet EcoSmart
 # 26277000, 26277670

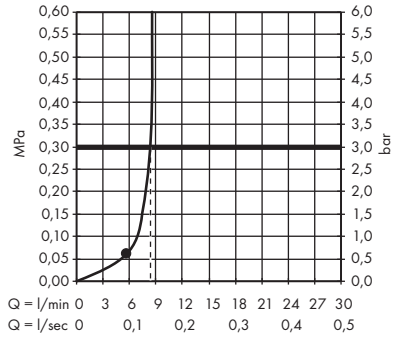

· **Vernis Blend** Overhead shower 200 1jet Green
 # 26093000

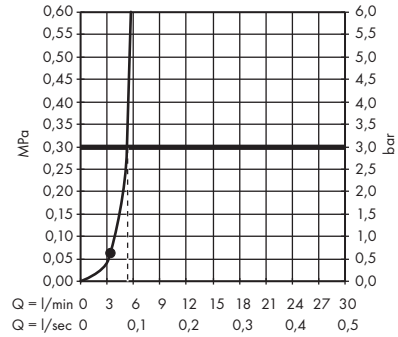

· **Vernis Blend** Overhead shower 200 1jet LowPressure
 # 26095000

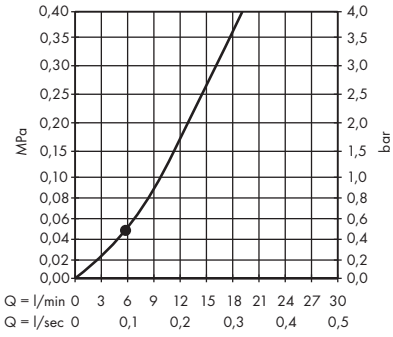

· **Vernis Shape** Overhead shower 230 1jet
 # 26281000, 26281670

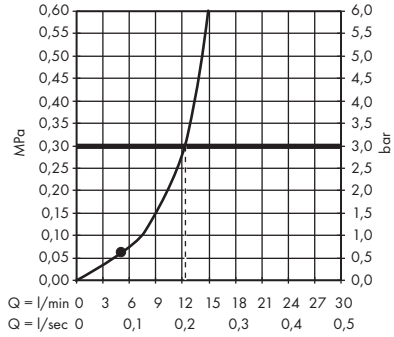

· **Vernis Shape** Overhead shower 230 1jet EcoSmart
 # 26283000, 26283670

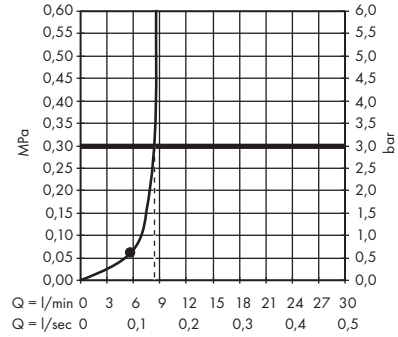

The consumption was measured in combination with the appropriate fittings (thermostat/mixer/in-wall valve) to reflect actual application in practice.

Showerpipes

· **Vernis Shape** Overhead shower 230 1jet Green
 # 26094000

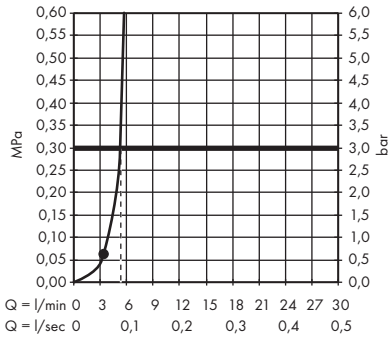

· **Vernis Shape** Overhead shower 230 1jet LowPressure
 # 26096000

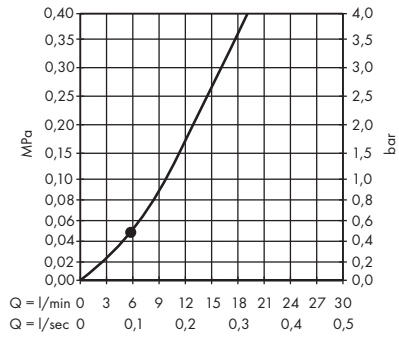

· **Vernis Blend** Showerpipe 200 1jet with thermostat
 # 26276000, 26276670

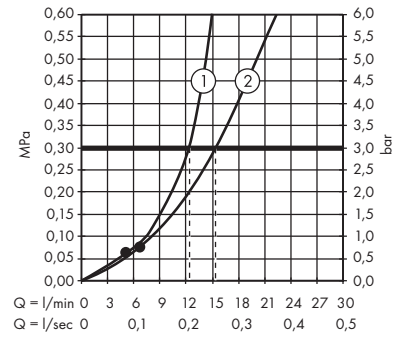

1. Overhead shower
2. Hand shower

· **Vernis Blend** Showerpipe 200 1jet EcoSmart with thermostat
 # 26089000, 26089670

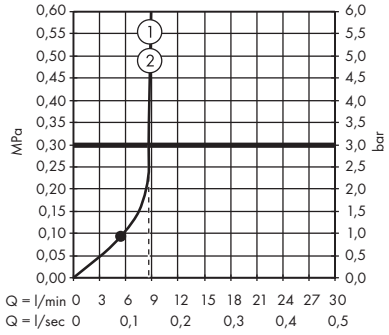

1. Overhead shower
2. Hand shower

· **Vernis Blend** Showerpipe 200 1jet Green with thermostat
 # 26318000

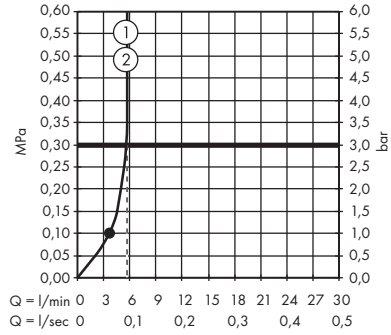

1. Overhead shower
2. Hand shower

· **Vernis Blend** Showerpipe 240 1jet with thermostat
 # 26426670

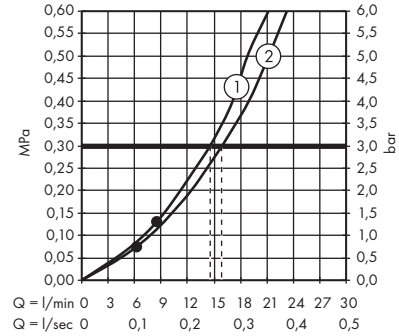

1. Overhead shower
2. Hand shower

· **Vernis Blend** Showerpipe 240 1jet EcoSmart with thermostat
 # 26428670

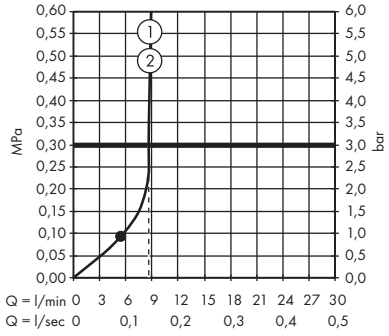

1. Overhead shower
2. Hand shower

· **Vernis Blend** Showerpipe 200 1jet with bath thermostat
 # 26274000

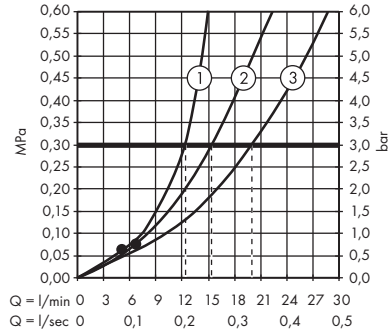

1. Overhead shower
2. Hand shower
3. Bath spout

· **Vernis Blend** Showerpipe 200 1jet EcoSmart with bath thermostat
 # 26079000

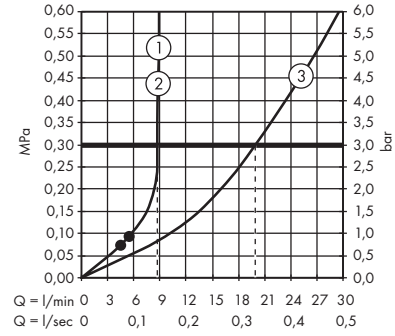

1. Overhead shower
2. Hand shower
3. Bath spout

The consumption was measured in combination with the appropriate fittings (thermostat/mixer/in-wall valve) to reflect actual application in practice.

· **Vernis Blend** Showerpipe 200 1jet Reno
 # 26272000, 26272670

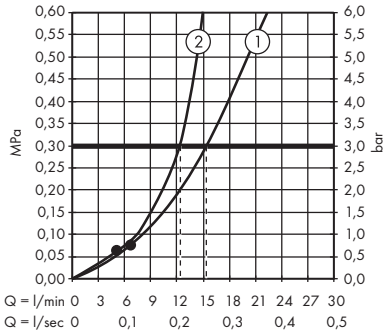

1. Hand shower
2. Overhead shower

· **Vernis Blend** Showerpipe 200 1jet EcoSmart Reno
 # 26099000, 26099670

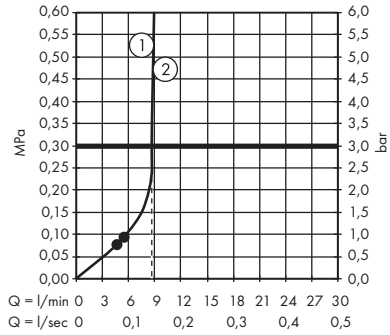

1. Overhead shower
2. Hand shower

· **Vernis Shape** Showerpipe 230 1jet with thermostat
 # 26286000, 26286670

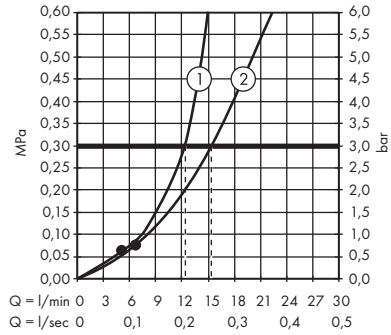

1. Overhead shower
2. Hand shower

· **Vernis Shape** Showerpipe 230 1jet EcoSmart with thermostat
 # 26097000, 26097670

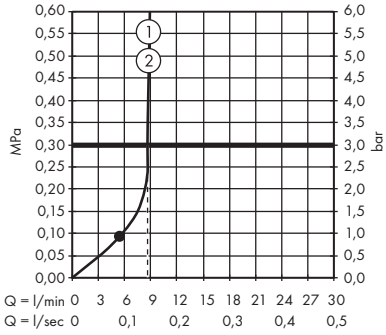

1. Overhead shower
2. Hand shower

· **Vernis Shape** Showerpipe 230 1jet Green with thermostat
 # 26319000

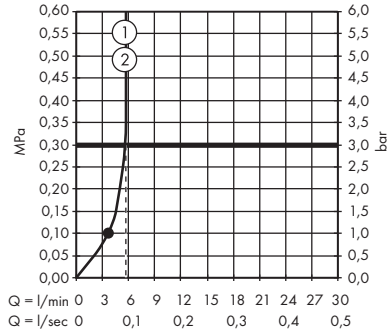

1. Overhead shower
2. Hand shower

· **Vernis Shape** Showerpipe 240 1jet with thermostat
 # 26427670

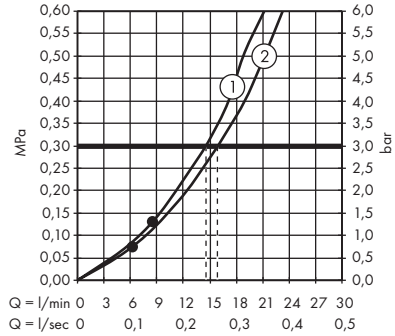

1. Overhead shower
2. Hand shower

· **Vernis Shape** Showerpipe 240 1jet EcoSmart with thermostat
 # 26429670

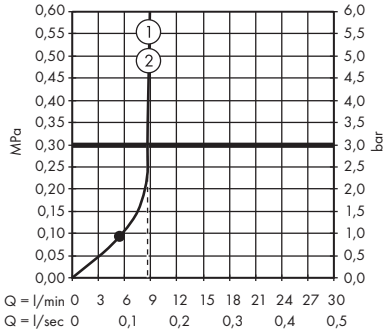

1. Overhead shower
2. Hand shower

· **Vernis Shape** Showerpipe 230 1jet with bath thermostat
 # 26284000

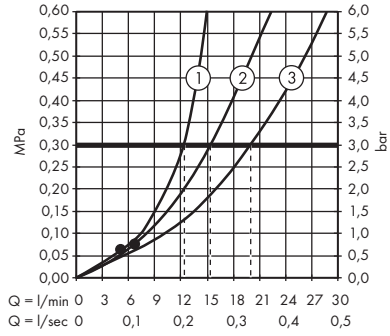

1. Overhead shower
2. Hand shower
3. Bath spout

· **Vernis Shape** Showerpipe 230 1jet EcoSmart with bath thermostat
 # 26098000

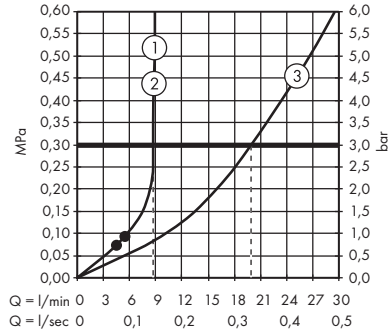

1. Overhead shower
2. Hand shower
3. Bath spout

The consumption was measured in combination with the appropriate fittings (thermostat/mixer/in-wall valve) to reflect actual application in practice.

· **Vernis Shape** Showerpipe 230 1jet Reno
 # 26282000, 26282670

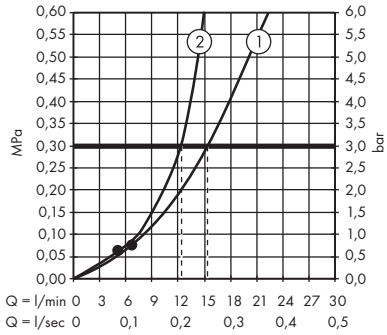

1. Hand shower
2. Overhead shower

· **Vernis Shape** Showerpipe 230 1jet EcoSmart Reno
 # 26289000, 26289670

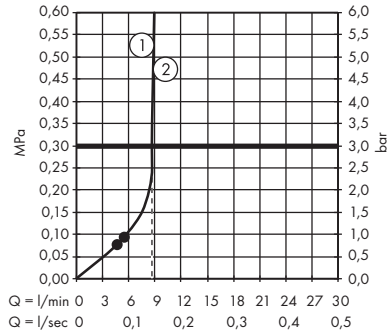

1. Overhead shower
2. Hand shower

Overhead showers

The consumption was measured in combination with the appropriate fittings (thermostat/mixer/in-wall valve) to reflect actual application in practice.

· **Clubmaster** Overhead shower 90 3jet
 # 28496000

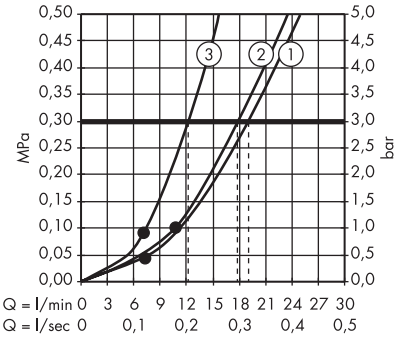

1. Normal
2. Soft
3. Massage

Body showers

· **Bodyvette** Body shower 1jet
 # 28466000

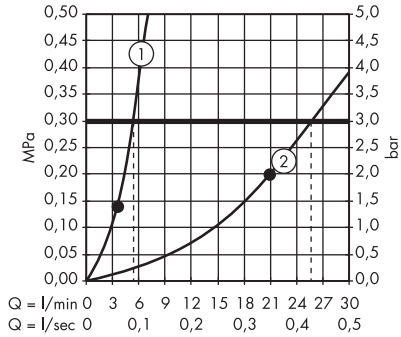

1. 1 x Body shower
2. 6 x Body shower

The consumption was measured in combination with the appropriate fittings (thermostat/mixer/in-wall valve) to reflect actual application in practice.

Hand showers

· **Jocolino** Children hand shower crocodile 2jet
 # 28788570

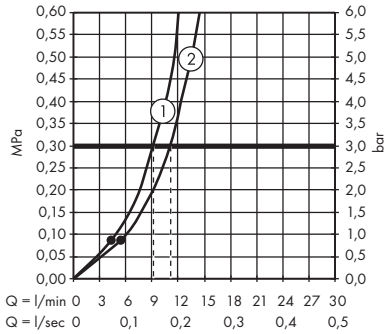

1. Rain
2. Mono spray

· **Jocolino** Children hand shower lion 2jet
 # 28760210

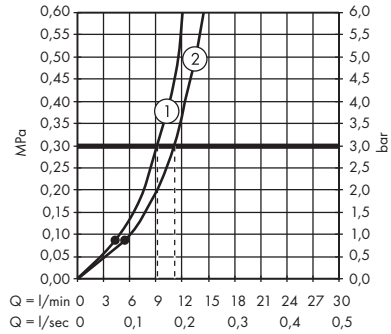

1. Rain
2. Mono spray

· **Jocolino** Children hand shower zebra 2jet
 # 28787640

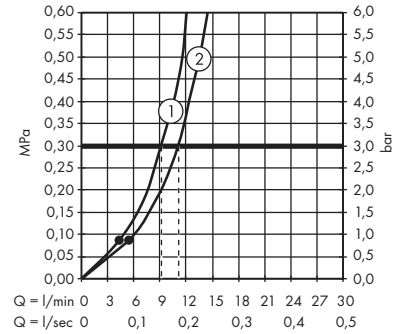

1. Rain
2. Mono spray

The consumption was measured in combination with the appropriate fittings (thermostat/mixer/in-wall valve) to reflect actual application in practice.

Hand showers

· **DogShower** Dogs hand shower 150 3jet Select
 # 26640540, 26640560, 26640670, 26640700

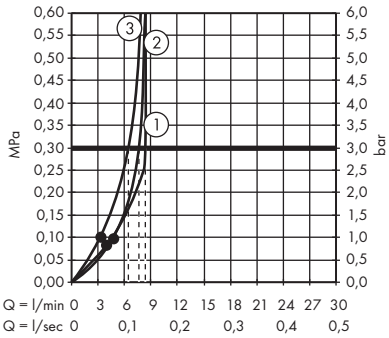

1. paw spray
2. leg spray
3. fur spray

The consumption was measured in combination with the appropriate fittings (thermostat/mixer/in-wall valve) to reflect actual application in practice.

Hand showers

· Bidette hand shower 1jet S EcoSmart+ for cold water with shower holder and shower hose 125 cm

 # 29230000, 29230670, 29230700

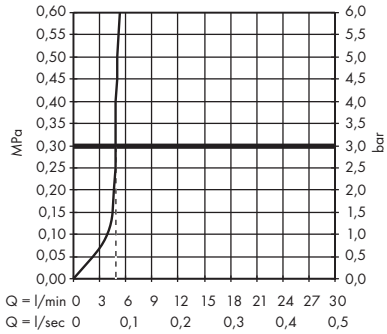

· Bidette hand shower 1jet E EcoSmart+ for cold water with shower holder and hose 125 cm

 # 29231000, 29231670, 29231700

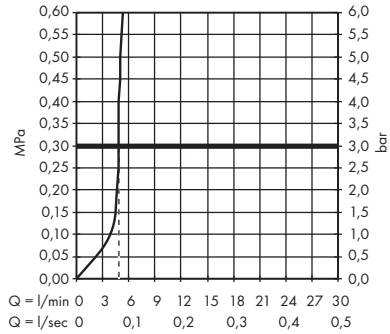

· Bidette hand shower 1jet S EcoSmart+ for warm water with shower holder and shower hose 125 cm

 # 29232000, 29232140, 29232340, 29232670, 29232700

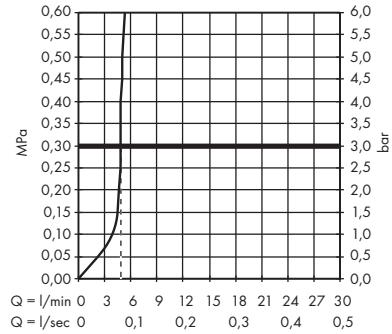

· Bidette hand shower 1jet E EcoSmart+ for warm water with shower holder and shower hose 125 cm

 # 29233000, 29233140, 29233340, 29233670, 29233700

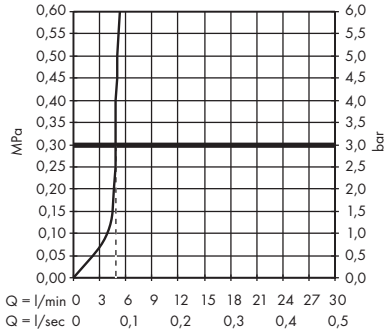

· Bidette hand shower 1jet S EcoSmart+ with shower holder and pressure resistant shower hose 125 cm

 # 29234000

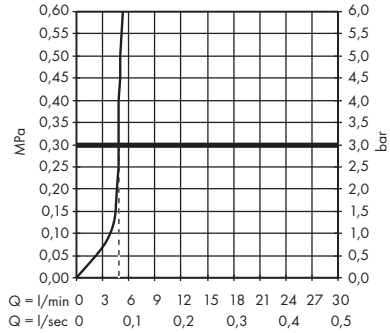

hansgrohe

Hansgrohe Pte Ltd · 69 Mohamed Sultan Road · Singapore 239015
Tel. +65 6884 5060 · Fax +65 68845071 · info@hansgrohe.com.sg · www.hansgrohe-asia.com

Find hansgrohe online and on social media.
Find out more about the hansgrohe world at pro.hansgrohe-asia.com

en-SEA - Product Book 2024 Bathroom & kitchen range
Subject to change in the interest of technical advancement · Form No. 84090506 · 02/24/1.42 · Printed in Germany

MIX
Paper | Supporting responsible forestry
FSC® C011124

4 059625 556061