

Price Book 2022

hansgrohe assortment bath and kitchen

hansgrohe.com

Hansgrohe contact

Hansgrohe Headquarters

The Hansgrohe Master Service - Headquarters

Service hours:
Monday-Thursday: 8:00 am - 4:00 pm
Friday: 8:00 am - 3:00 pm

Phone: +49 7836 51-1282
Fax: +49 7836 51-1440
info@hansgrohe.com

You will also find technical information at
pro.hansgrohe-int.com

Global Projects Services - Headquarters

gpservices@hansgrohe.com

You will also find tender texts and planning details at
pro.hansgrohe-int.com/planning-data

Hansgrohe Aquademie - Headquarters

Monday-Friday: 7:30 am - 7:00 pm
Saturday-Sunday: 10:00 am - 4:00 pm

Hansgrohe SE
Hansgrohe Aquademie
Auestr. 9
77761 Schiltach/Germany
Phone: +49 7836 51-3272
Fax: +49 7836 51-1505

The Aquademie is our adventure centre on all aspects of water.
pro.hansgrohe-int.com/aquademie

The prices quoted are recommended retail prices and do not include VAT. Errors and omissions excepted.
This Price Book renders all preceding ones void.

Measurements within scale drawings are in mm.

You will find further information and sales arguments on the individual products in the sales manual or at pro.hansgrohe-int.com

All products subject to availability. Availability may be temporarily affected by material shortages, supply chain disruption or other force majeure events. Please contact us for details.

The following general terms and conditions shall apply:
https://www.hansgrohe.com/terms-of-conditions

Price Book 2022

hansgrohe

Hansgrohe SE · P.O. Box 1145 · 77757 Schiltach/Germany
Tel. +49 7836 51-0 · Fax +49 7836 51-1300
info@hansgrohe.com · www.hansgrohe.com

Index

Brand hansgrohe

10 Editorial
12 Company
14 Innovation
16 Design
8 Quality
19 Service
20 Responsibilty
21 Sports sponsorship

Spray modes and technologies

Bath
22 Spray types
37 Technologies
41 FinishPlus

Kitchen
36 Spray types
37 Technologies
41 FinishPlus

42 Phase out products
47 New products
57 Index price brackets
58 Packaging units
68 Code numbers

Bath

Hand showers

96 Rainfinity
96 Raindance
98 Pulsify S NEW
100 Croma
103 Crometta
104 Vernis NEW
105 Jocolino NEW
106 DogShower NEW

Shower sets / Shower bars / Shower holder

110 Shower sets
140 Shower sets with thermostatic mixer for exposed installation
147 Wall bars
154 Shower holder sets
163 Shower holder
164 Fixfit wall outlets

Shower hoses and accessories

170 Sensoflex
170 Isiflex
171 Comfortflex
171 Metaflex

Overhead showers

176 Rainmaker Select
181 Rainfinity
187 Raindance
202 Pulsify S NEW
204 Croma
210 Crometta
213 Vernis NEW

Showerpipes and shower panels

226 Rainmaker Select
228 Rainfinity
229 Raindance
242 Pulsify S NEW
245 Croma
264 Crometta
272 Vernis NEW

Thermostatic mixers / valves

288 Thermostatic mixers and combis for exposed installation
308 Thermostatic mixers for concealed installation

iBox universal

333 iBox universal

Mixer lines

343 FinishPlus NEW
355 Metropol
381 Metris
401 Finoris NEW
411 Vivenis NEW
421 Talis
451 Focus
465 Vernis NEW
489 Logis NEW

Electronic- and project mixers/ Care assortment

508 Electronic mixers
512 CoolStart mixers
519 LowFlow mixers
524 Focus Care mixers
526 Unica Comfort shower sets and wall bars
529 Unica Comfort Accessories
530 Hand showers

Accessories

538 XtraStoris NEW
541 Rainfinity
541 Logis
544 AddStoris NEW
550 Unica Comfort Accessories
551 Logis Universal
554 WallStoris NEW
562 RainScent

Wastes and overflow

Shower
570 RainDrain NEW
589 Waste for shower trays

Bath
590 Bath filler with waste and overflow for bath tubs
595 Waste and overflow for bath tubs

Basin
597 Waste for basin/ bidet
598 Traps
601 Accessories

Kitchen

Kitchen mixers and sinks

606 Stainless-steel sinks
618 SilicaTec sinks
630 Aqittura M91
634 Aquno Select M81
635 Metris Select M71 / Metris M71
645 Talis Select M51 / Talis M51
652 Talis M52
653 Talis M54
658 Focus M41
661 Focus M42
665 Zesis M33 NEW
668 Logis M31
670 Logis M32
670 Vernis M35 NEW
673 Sink combis

Spare parts

Spare parts and accessories for showers, bath mixers and kitchen mixers

Showers
692 Shower hose
692 Showers
692 Shower holder and slider
693 Soap dishes and shampoo holder
695 Covers
696 Service sets for showers
696 Wall bar spacers

Bath mixers and kitchen mixers
699 Cartridges
700 Spray former/ aerators
702 Diverters
702 Shut-off units and thermostatic cartridges
703 Handles
706 Escutcheons and flanges

Flow diagrams

714 Hand showers
720 Overhead showers
732 Body showers
732 Showerpipes and shower panels

Spray types



An unrivalled shower experience thanks to gently enveloping micro-droplets.



Intense jet of micro-fine droplets for sensational showering.



Full rain shower, ideal for washing hair.



An intensely invigorating water flow



Intensive shower rain that refreshes and rejuvenates.



Gentle shower rain with air-enriched drops.



Large jet envelops your whole body in soft droplets.



A soft water spray that caresses the body for that feel-good sensation.



Targeted spray, for a soothing shower experience.



A powerful and invigorating massage spray.

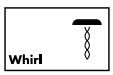

Concentrated targeted massage spray.



The harmonious combination of gentle shower drops and dynamic spray.



Boosts energy after a challenging day.



A harmonious combination of soft shower rain and a dynamic spray.



shower rain, ideal for washing hair.



An intense jet of water that activates and wakes you up.

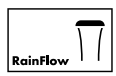

Powerful flood jet for generous coverage.



Generous flow of soft sprays.



Full shower spray for rinsing off dirt and shampoo.



For legs and sensitive areas.



A soft spray, ideal for gently cleaning paws.



Crystal clear and economical, without added air. Ideal for quickly filling large containers, and preventing splashing.



Ventilated jet thanks to AirPower technology. Fuller, lighter and softer droplets for a truly unique water spray.



Economical and cleansing. Also perfect for fast spraying at the sink.

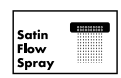

The soft, flat spray is splash-free, making it highly efficient at saving water.

Finishes

When specifying the surface, each order number (#) has 8 digits,
for example 28500, - 000 = chrome



-000
Chrome

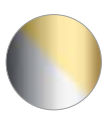

-090
Chrom
Gold Optic



-140
Brushed Bronze



-340
Brushed Black
Chrome



-400
White Chrome

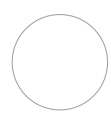

-450
White



-540
Petrol

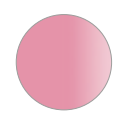

-560
Pink



-600
Black Chrome



-610
Black



-670
Matt Black

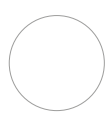

-700
Matt White



-800
Stainless Steel



-820
Brushed Nickel



-990
Polished Gold
Optic

Technologies



Simply regulates the water flow at the touch of a button: a convenient way to turn the shower on and off or switch between spray modes.



Reduces the flow rate to save water and energy. For long-lasting pleasure.



Combines water with a generous amount of air. For a soft, splashfree water spray and rich, full shower drops.



Wipe limescale deposits away easily by rubbing your finger over the flexible silicone nubs.



Easy and fast cleaning and maintenance of surfaces.



Distributes the water over the large spray face enveloping the whole body in drops of wellbeing.



With the adjustable shower head, the water jet can be adjusted individually.

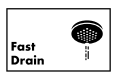

Fast drainage of shower to reduce the dripping time.

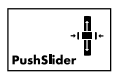

With just one hand, the shower holder can be freely adjusted in height at the touch of a button. For a safe and comfortable shower experience.



Easy water control: with the control dial the water flow can be adjusted easily.



Cools through the controlled flow of cold water to stop the product getting hot. For even safer showering.



The bath spout can be neatly stored underneath the thermostat when not in use. A truly aesthetical solution for safety and mobility.

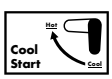

Cold water starts to flow when it is opened in the basic setting. You consume hot water only when you need it.



Defines the useable area between washstand and mixer. Something to suit every customer.

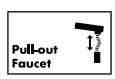

Highest flexibility by pullout function.



Like many motion detectors, the sensor reacts to changes in infrared radiation. As soon as it detects the warmth of the hand, water will flow.



Defines the height, side clearance and – with the pull-out function – the length of the space around the mixer.



The hose extends quietly and smoothly from the base cabinet by up to 76 cm.

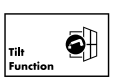

The kitchen tap can be quickly removed from its holder and lowered so you can easily open the window inwards.

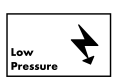

Low pressure fitting for cold water pipe with boiler/heat storage.



Assembly possible both with included glue-kit and screws.



All accessories can be easily clicked onto the wall bar and removed from it.

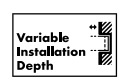

Variable installation depth of finish set for an individual look.

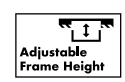

For flush integration into the adjacent area.



Water damage protection via water proof basic set and preassembled sealing membrane.



In-floor installation as design highlight.



Wallbound installation for comfortable use of space.

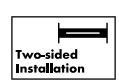

Installation adapted to the integration between two walls.

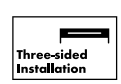

Minimalistic installation against back and side walls.



Drain can be cut to length. For optimal adaptation to the installation surrounding.

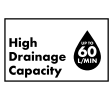

High capacity drain.



Comfortable cleaning of the siphon.



You can increase the amount of water in a targeted way when needed.

Meet the beauty of water

The new meaning of 'home'
Over the past year, many of us have come to realise the importance of home providing a place of relaxation and retreat. As a company, we know we are providing something truly fundamental to our customers: a home filled with beauty and quality, a place of escape from the outside world. Whatever happens, we are – and always will – be by your side.

Innovations to bring your business to life
This year, we're introducing a range of exciting new products that deliver on our guiding principles: **innovation, design, quality** and **responsibility**. We offer solutions to every need, by developing cutting-edge products to suit every lifestyle. Meet Pulsify, the shower that offers a completely new experience in any sized bathroom, thanks to the innovative PowderRain spray. Or Finoris, the tap that gives a new freedom of movement in the bathroom. Innovation continues with the multi-sensory shower experience RainTunes*, the fun Jocolino children's shower, the flexible WallStoris storage system and the RainDrain shower channels.

Designed for people
hansgrohe is a brand for life. Whether you are looking for a moment of calm or refreshment, every product we make is designed to make life easier. Our products are not one-off ideas but comprehensive solutions, destined to become integral to everyday life. It's this that defines our brand: our focus on people.



*RainTunes is not available worldwide





hansgrohe – our past informs our future

hansgrohe is a company steeped in tradition. It was founded by Hans Grohe in 1901, with a small metalwork shop in Schiltach, the Black Forest. Today, you will still find our Innovation Centre and corporate headquarters there. The hansgrohe brand has an international reputation for excellence, thanks largely to the commitment of its people. Each employee is passionate about water, but it's our expertise which really set us apart as a company. These qualities have resulted in revolutionary bathroom innovations and pioneering water-saving technologies, yesterday, today and tomorrow.



In 1901, Hans Grohe founded his metalwork business. He was a visionary, recognising the changing role of the bathroom in the home (despite it being a fairly new concept to most at the time).

1928



Hand shower
The first shower with a white porcelain handle. This hansgrohe innovation made showering affordable for many households for the first time.



Shower bar Unica
Thanks to this revolutionary idea, hand showers could be mounted at a required height



Tribel
First design award winning hand shower in many colours and with three spray types.



ALLEGROH
The first mixer with the new lever handle, swivel spout and innovative ball mix technique.



iBox universal
First and only basic set for all standard and thermostat solutions – a revolution in concealed installation.



Raindance
The first hand shower with an XXL shower head, flat silhouette and short handle. The all-rounder becomes a trendsetter.

New milestones in bathroom innovation



FinishPlus
High-quality finishes provide a variety of design options.



PowderRain
A unique shower experience thanks to the soft caress of micro droplets.



RainTunes*
We combine water with sound, light, imagery and fragrance into one holistic wellness experience.

* RainTunes is not available worldwide

Innovation – driving our business and yours

Whether in a new build or renovation, clever products and state-of-the-art technologies will keep you ahead of the competition. Hansgrohe SE registers hundreds of new designs, patents and brands every year, holding 15,000 patents to date. It's the reason we're considered pioneers in the industry. We combine top technical performance with a focus on the needs and enjoyment of the customer. With hansgrohe, you can have confidence that you have technological innovation on your side.



Our own research and development laboratory

We believe every part of a product is important. From the look, functionality and material of a shower, to the sound it makes as water flows. In our in-house spray laboratory, acoustic experts tirelessly research the perfect water sound. This attention to detail is reflected in over 15,000 active patents. The result is that customers around the world can enjoy more comfort and relaxation in the bathroom.





The right spray type for every shower

Different people require different things from the shower. Some look for a relaxing time-out from the world, while others want an energising, refreshing shower experience. Whatever your customers are looking for, with hansgrohe you will find the right spray type. PowderRain is one such spray, enveloping the body in thousands of ultra-fine droplets and creating a delicate cocoon of water. Our experts have used all of their knowledge to ensure quiet operation, and the result is a sensual, whisper-quiet home spa experience.



Technologies that inspire

The best products enrich people's lives, bringing more comfort and enjoyment. And sometimes, it's the smallest technologies that make the difference. hansgrohe's Select is just one button that brings a new ease of use to the bathroom. Or QuickClean, the clever anti-limescale solution. hansgrohe technologies make taps and showers enjoyable to use and easy to clean.

Design – collaborating for excellence

Elegant functionality appeals to both the heart and mind, and it's something we specialise in. Our products are consistently award-winning, outlasting fads and instead providing long-lasting value, whether they are found in the home or in a world famous hotel. With over 30 years of collaboration with Phoenix Design, hansgrohe is a leader within the industry, with more than 600 awards collected for our design achievements.

More than 600 awards



DESIGN AWARD 2021

INNOVATIVE INTERIOR winner

GERMAN DESIGN AWARD WINNER 2021

GERMAN INNOVATION AWARD '21 GOLD

reddot winner 2021





Serenia The Palm
Dubai, United Arab Emirates
Produkte: hansgrohe Metris
Copyright: Serenia The Palm



Developers, investors, architects and planners around the world spearhead the most ambitious of projects, ensuring that intelligent and elegant water solutions are always in demand. Our shower and bathroom collections are well known as the very embodiment of design excellence. That's why you'll find them in world class hotels, exclusive sports clubs, royal castles and luxury yachts.
You can find more inspiring examples at
pro.hansgrohe.com/your-selling-points/references

At home all over the world



InterContinental – ANA Beppu Resort & Spa
Oita, Japan
Products: hansgrohe Logis
Copyright: ANA Beppu Resort & Spa



Quality – the highest standards for the longest product life

Install a hansgrohe product, and you know it will be enjoyed for years to come. Offering customers the highest quality at all times is a fundamental part of our philosophy. We have been manufacturing bathroom and kitchen products for over 120 years, and we are proud of our intensive quality control processes, practiced around the world.

Our reliability goes one step further: we offer our end users a five year* manufacturer's guarantee on our products.

This manufacturer's guarantee goes far beyond statutory requirements. With this, we provide our sales partners with yet another advantage of using hansgrohe over other brands. We also ensure that we provide assistance to our specialist partners when applying this manufacturer's guarantee.

Your customer will also benefit from the fifteen year parts availability guarantee, which ensures the security of their investment even after a product is phased out.



hansgrohe guarantee and availability guarantee



hansgrohe produces incredibly advanced technology, but the measurement of quality is a very human endeavour. That's why every single product is carefully checked by human hands before it leaves our factory.

* This guarantee applies to all hansgrohe products, with the exception of the products listed under II b on **hansgrohe.com/terms-of-conditions**

Service – a partnership you can rely on

You deliver your best on each job and need a partner you can rely on. As a trade partner, hansgrohe is here to support you. Through hansgrohe, you can contact experienced plumbers to help you with even the most complex problems – anytime, anywhere. We also provide brochures, videos and online webinars to help you keep your skills up-to-date and provide the best service for your customers.

We keep you up-to-date – on hansgrohe product innovations, marketing and sales campaigns, seminars, events and company news. Whether you're from a trade, craftsman or project management background, register here to always stay in the know.
pro.hansgrohe.com/newsletter



Professional knowledge from our online Aquademie or on-site seminars

hansgrohe eLearnings gives you the skills and knowledge to be able to advise customer effectively. Our digital training courses train you on the features and benefits of our products. This is all accessible online, on your computer, tablet or smartphone, for the ultimate in flexibility.
pro.hansgrohe.com/service/elearning

Knowledge update: We offer seminars, training and events on a variety of topics, such as new technologies, modern marketing tools or operational and personnel management. These happen regularly at our in-house training centre, Aquademie in Schiltach, and nationwide on-site.
pro.hansgrohe.com/service/showrooms

Your success is our success

On our partners website you'll find many additional services, such as delivery information, online spare parts catalogue, dimensional drawings and 3D data, price lists and Building Information Modelling (BIM) data for most software applications and marketing tools. This means you can access it at any time, whether you're out and about or with a customer.
pro.hansgrohe.com

Taking responsibility – acting sustainably

We focus on three areas of accountability: **responsible management, social action** and **ecological awareness**. We believe this is the only way to be successful, both now and in the future. This is something we put into practice worldwide, and have been doing so for many years. This includes ensuring we have an environmentally conscious production process, and mindfully employing people and other resources.

Klaus Grohe, the founder's son, was an ardent campaigner for sustainability from an early age. He ensured that environmentally-conscious thinking was a core principle at Hansgrohe. As early as 1987, Hansgrohe was one of the first to bring a water-saving shower to the market. From this point on, many projects were undertaken to ensure environmentally and resource-friendly production in our factories.

At Hansgrohe, we are in the process of taking giant steps forward to help minimise climate change. By 2030, our aim is to make the entire company, including our products, climate neutral. To implement this, we carefully choose our raw materials, packaging and logistics based on their climate impact.



Simply calculate potential savings

With our water saving calculator, it's easy to see the amount of water that could potentially be saved with our environmentally-friendly EcoSmart technology. It's useful for both large and small customers, showing instantly the products that will help conserve our most valuable resource.
pro.hansgrohe.com/consultation/water-savings-calculator



Calculate individually

- Number of people in household
- Energy type
- Average shower length (in mins)
- Water costs €/1000 L
- Energy costs €/kWh
- Product selection

Sports sponsorship – teaming premium athletes with premium products

hansgrohe has been the official title sponsor of the world class cycling team BORA-hansgrohe since 2017. We share the same values and have a similarly global reach: with this international dream team of 29 athletes from ten nations, hansgrohe has helped them to compete in 140 countries around the world. As brand ambassadors, the athletes are on the road for almost 300 days a year.

In 2019, BORA-hansgrohe was the second ranked team in the UCI WorldTour. A highlight of 2021 was the top German team winning the points classification at the Giro d'Italia – largely thanks to superstar Peter Sagan, who won the famous "Maglia Ciclamino" jersey. Find out where, when and who is in the starting position on the website and via social media from hansgrohe and the BORA-hansgrohe team.

borahansgroheofficial
hansgrohe

borahansgrohe
hansgrohe

BORA-hansgrohe.com
pro.hansgrohe.com



More indulgence with a range spray types by hansgrohe

Spray types – relax or energise with every shower

Different people require different things from the shower. Some look for a relaxing time-out from the world, while others want an energising, refreshing shower experience. Whatever your customers are looking for, with hansgrohe you will find the right hand and overhead shower, with the right spray type. Products featuring our Select technology provide particular convenience for your customers.



PowderRain
Revolutionise your daily shower experience with Powder- Rain and transform your bathroom into an oasis of relaxation. Instead of only one jet outlet per nozzle, PowderRain has up to five openings that create thousands of fine and silky micro-droplets that envelope your body.



Intense PowderRain
Intense jets of fine micro-droplets for sensational showering. Intense PowderRain is extraordinarily effective as the number of droplets has been substantially increased to produce an intense, yet velvety soft spray.

Simply scan the code and experience the spray patterns in the video.



Rain
Despite the smaller nozzles on the hand shower and overhead shower, the performance of both are consistently excellent. The Rain spray invigorates and refreshes, making rinsing out shampoo quick and easy.



RainAir and RainAir XL
Relaxing shower rain, which is enriched with air inside the shower head. This makes the water feel exceptionally soft and plump, covering your body with soft beads of water and enveloping you to create a sense of well-being. It's a spray most loved by pleasure seekers.



IntenseRain
It's not just shampoo you can rinse away with ease thanks to IntenseRain water spray. It's perfect for setting yourself up for the day too: wash morning tiredness down the drain – for a refreshing start to the day.

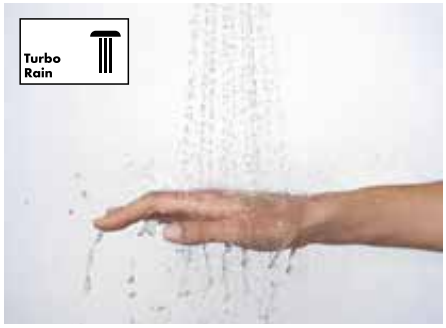

TurboRain
The all-purpose tool for quick, straightforward results: TurboRain is the most powerful of our Rain spray modes and lives up to its name every time.

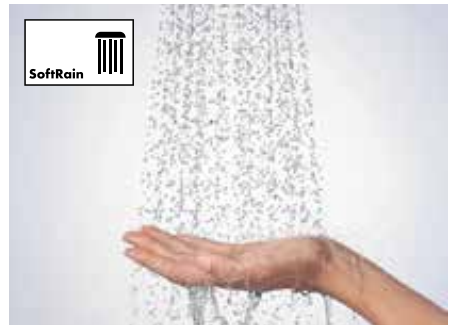

SoftRain
The gentle SoftRain spray is a treat for soul and skin, whether it's a quick daily shower or a pampering evening indulgence.



Mix
Simultaneously gentle and dynamic. The mix spray combines the rich, soft RainAir spray with the strong, revitalising CaresseAir spray. Soft drops envelop your body, while a warm jet massages the skin. It's a dream combination for daily showering pleasure.



Whirl
A swirling massage spray, which showers away the stresses of the day. This relieves tension, primarily in the neck area and shoulders. The rotating helix jet wanders over the skin, just like a masseur's fingers. The ideal choice for relieving stress or giving yourself a spa-like treatment after playing sport.



CaresseAir
Five strong single sprays combine in a pleasantly revitalising and powerful massage. It's just the thing for post-exercise or after a hard day at work – good as new in minutes.

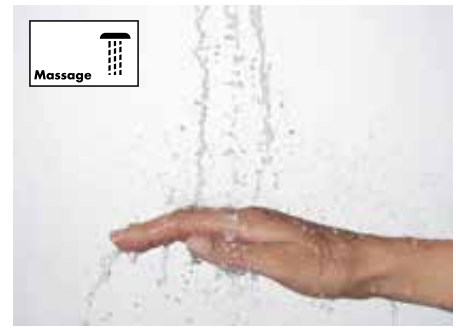

Massage
A concentrated spray that relieves the stress of everyday life, easing areas of tension. The innovative ring-shaped spray creates an at-home wellness experience like no other.

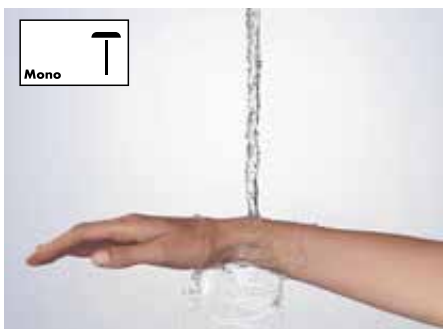

Mono
A targeted, soothing spray from the centre of the shower-head. The Mono jet's lightness helps you to unwind, making it a perfect spray for relaxing.



RainFlow
An overhead shower with RainFlow creates a waterfall in the bathroom. The effect is a cascade of water on the neck and shoulders, easing tension and bringing total relaxation.



RainStream
The new single sparkling RainStream spray is a crowning achievement for the hansgrohe R&D team. These special overhead shower sprays remain revitalising and intense from head to toe, giving a consistent experience however tall you are.

You'll find videos on all the spray types at **youtube.com/hansgrohe**

Our experience means more efficiency in the bathroom

Technology — providing the ultimate ease of use for your customers



Select

Because sometimes pressing is easier than turning. With our innovative Select technology, a simple touch of a button on the shower or shower control is all it takes to change the spray mode or turn the water on/off for even more comfort while showering, no matter your age.

- Intuitive control at the touch of a button
- Suitable for all age groups
- Mechanical construction for permanent functional safety
- Temperature can be pre-set
- Can even be operated with your elbow or arm



The idea: a button instead of a lever at the sink. The mechanical Select button simplifies everyday routines, and is robust enough to stand the rigours of everyday life, as our longterm testing proves.
These small changes can have a large impact on how convenient a product is to use, and make them ideal for a multi-generational household.









EcoSmart

Thanks to EcoSmart technology, hansgrohe showers consume up to 60 % less water than conventional products thanks to the addition of air to the spray. This also saves valuable energy.

- Up to 60% less water consumption (shower)
- Water consumption of only 5 l/min (tap)
- Lower consumption means lower energy requirements, and thefore fewer CO_2 emissions
- Lower water and energy consumption for double efficiency



Thanks to EcoSmart technology's aeration, our basin taps consume just 5 l/min of water. This saves warm water and energy. All of our basin taps have achieved level A in the home sector: EcoSmart tech- the best possible result.

The savings calculator computes how much water and energy can be saved at:
pro.hansgrohe.com/consultation/water-savings-calculator



QuickClean

QuickClean means flexible silicone inserts on the aerators. Dirt and limescale deposits can be simply rubbed off with your finger with no need to use cleaning products, helping to extend your shower's lifespan.

- Fast and easy cleaning
- Ultra high quality and tear resistant silicone
- For a long lifetime and functionality

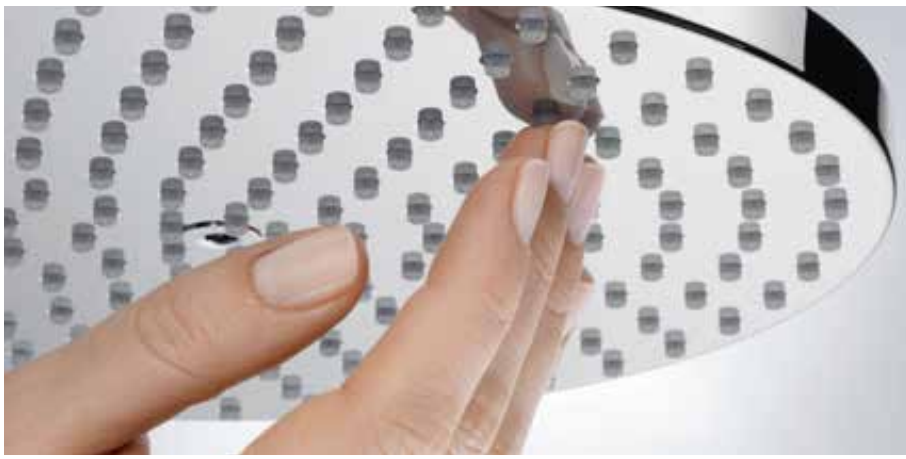





AirPower

Comfort and efficiency don't have to be mutually exclusive and our AirPower showers prove it. An ample supply of air is sucked in via the spray disc of your shower, making the droplets fuller, lighter and softer, increasing water efficiency at the same time.

- Fuller, lighter and softer drops – pure shower pleasure
- Fewer splashes, so less cleaning
- Higher water efficiency thanks to a larger water volume



XXL Performance

Large-format showers have to be experienced to be truly appreciated. The luxurious hansgrohe design envelops the individual in water, bringing XXL performance to the bathroom.

- Large-format showering sensation
- Higher water efficiency – evenly distributed spray nozzles, for an incomparable shower experience



Tiltable

You can adjust t his overhead s hower a t an angle to suit the shower area, so that the whole body is soothingly enveloped in water.

- Adjustable shower head to suit the individual
- Angle of adjustments provides flexibility
- Modern installation for contemporary enjoyment



FastDrain minimises drips

This clever technology significantly reduces dripping from the overhead shower.

- Reduces annoying dripping
- Smarter waterflow inside the shower
- Easier cleaning



Water regulation

The amount of water can be precisely regulated using the thermostat. Not only does this conserve water, it's great for children, who often find a gentler waterflow more pleasant.

- Precisely regulate the amount of water
- Actively regulate water consumption with the volume control
- Easy operation – suitable for all ages



Height-adjustable PushSlider

With just one hand, the shower holder can be freely adjusted in height at the touch of a button. For a safe and comfortable shower experience.

- Easy to use with one hand
- More comfort for every generation
- Easily adjustable shower heights



Rotatable bath spout

The water inlet of this bath thermostat can be turned 90° so that it disappears underneath, providing more space to move while bathing or showering and creating a neater overall appearance

- More freedom of movement when bathing or showering
- Functional design
- Streamlining the overall look



CoolContact

The CoolContact cooling technology stops the thermostatic mixer's housing getting too hot. So there is no more need to keep a safe distance from the taps, making showering even more care-free. It also means there is no more risk of children burning their delicate hands.

- Innovative cooling technology
- More safety in the bathroom, for children too
- Care-free showeringn

You can find more information at **pro.hansgrohe.com/your-selling-points/innovative-technologies**



Pull-out function

Thanks to the pull-out tap, the working area at the sink becomes much larger. It also offers fantastic ease of use, thanks to the magnetic recoil function.

- The pull-out tap extends your workspace
- Easy handling
- Minimalist design for maximum flexibility and freedom of movement



ComfortZone

Whether you want more elbow room when washing your hands, a comfortable way to wash your hair or just fill containers, the higher the tap, the more flexible your options become. We call the space between the tap and the ceramics the ComfortZone because you can use it however you like.

- The optimal height for every requirement
- The perfect combination of tap and basin
- Reduce unnecessary water spraying through a reliable test: **pro.hansgrohe.com/consultation/comfortzone**

The right fitting for every need

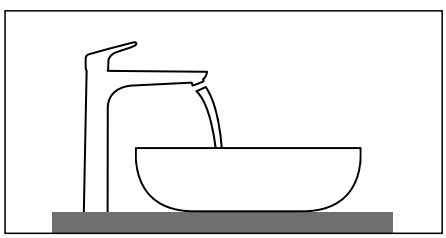

Mixer behind free standing exposed basin or behind wash bowl.

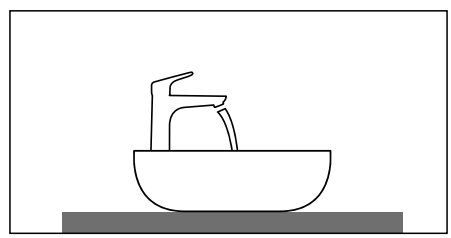

Wash bowl with exposed mixer.

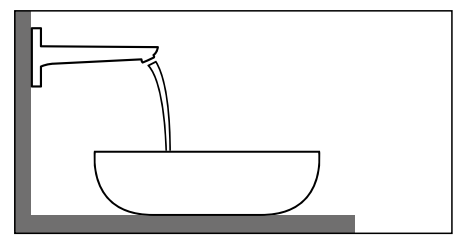

Wash bowl with wall mixer.

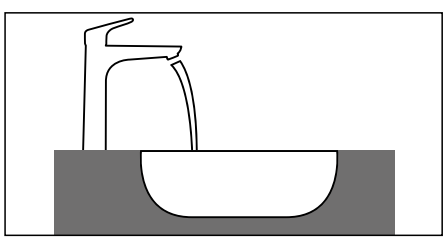

Mixer for built-in basin.

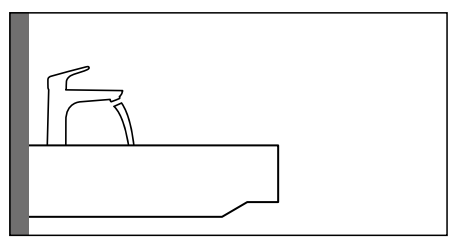

Wall-hanging wash basin with exposed mixer.

You can find more information at **pro.hansgrohe.com/your-selling-points/innovative-technologies**

The right tap for every sink

The ComfortZone test — ensuring perfect synchronisation

The higher the tap, the more flexible the space. However, if a wash basin and tap do not match up properly it can result in splashback. To avoid this, we developed the ComfortZone test. Carried out under realistic conditions, the test reveals just how well customers' taps work in combination with conventional wash basins from leading manufacturers.



How the ComfortZone test works

1. Free space test
Is there enough of a gap in the combination of mixer and wash basin? A test sphere is positioned between the mixer and wash basin to check how easy and comfortable it is to wash the hands.

2. Splash test
Is there any splashing when the mixer is turned on? The mixer is opened and closed several times under different water pressures. Between tests, the splashes are analysed and the wash basin rubbed dry.

3. Practice test
Is there any splashing when washing the hands? A standardised hand model is passed under the water flow and the splashes outside of the basin analysed.

Free PDF: the test results from over 12.000 combinations

Take advantage of the thousands of tests we have conducted: as a professional partner, we make the results exclusively available to you. With an overview of all sink and tap combinations, the results give you everything you need for a successful sales conversation. The PDF test result files are available free of charge at **pro.hansgrohe.de/comfortzone-test**

Advantages and benefits

- Reliable test procedure on the wash basins of leading manufacturers, fitted in accordance with the instructions
- Recommendations from over 12.000 tested mixer wash basin combinations available online for planning – constantl expanded and updated
- The certainty that wash basin and mixer harmonise – without annoying splashes



Contactless taps

Like many motion detectors, the sensor on our non-contact products reacts to changes in infrared radiation. As soon as it detects the warmth of the hand, water flows, making it economical and hygienic.

- Contactless
- Savings in water and energy
- Maximum hand hygiene – ideal in public spaces



CoolStart

On standard taps the continuous flow heater or circulation pump starts up immediately when the handle is in the middle position, but with CoolStart taps the hot water is only added when the lever is moved to the left. This cuts down on energy needs, CO_2 emissions and costs.

- Basic setting enables only cold water to flow
- Large energy, and therefore money, saving potential – ideal in business premises
- Special user ergonomics (the lever only needs to be moved to the left for hot water)



LowFlow

In business projects, water and energy savings are important criteria for building certification, such as LEED or BREEAM. This is why hansgrohe has developed LowFlow cartridges, providing a waterflow of only 3.5 l/min.

- Savings in water and energy
- Certification advantages especially for projects
- Precise temperature setting despite low flow rate



EasyClick installation

Modern accessories, easy to install: hansgrohe hooks, shelves and baskets can be attached to the wall bar with one click. With this modular organisation system, accessories can be moved or removed quickly and easily.

- Simply attach it to the wall bar with one click
- It can be removed or re-attached at any time
- Flexible storage system with almost infinite combinations



Can be attached using glue or screw

Secure hold, residue-free fixing: hansgrohe wall bars can be glued or drilled to the bathroom wall using a rustproof steel plate. Both types of attachment securely hold the accessories.

- Easy DIY installation: use glue or screws to secure
- Remove at any time without leaving any residue
- Robust material: stainless steel plate



Variable installation depth

These hansgrohe accessories provide plenty of storage space. With their variable installation depth, the ready-to-use sets suit every customer requirement – while also ensuring an individual look.

- Variable installation depth
- Storage solution embedded into the wall



Protection against water damage

This basic installation set is embedded flush with the wall and is 100 % waterproof. A pre-assembled seal prevents shower water from penetrating the surrounding floor or under the tiles.

- 100 % waterproof
- Pre-assembled seal

You can find more information at **pro.hansgrohe.com/your-selling-points/innovative-technologies**



Freely install in any area

Adaptable installation: This shower drain can be positioned in different places on the floor. This type of installation requires a four-sided slope.

- hansgrohe shower channel installed freely in the area
- Four slopes required
- A highly functional design highlight



Wall-mounted installation

Wall-mounted installation: Install this shower drain against a wall. This type of installation requires a slope on three sides.

- hansgrohe shower channel installed on a wall
- Three slopes required
- Effective use of space



Wall-to-wall installation

Wall-to-wall installation: Install this shower drain between two walls. This type of installation requires a slope on both sides.

- hansgrohe shower channel installed between two walls
- Two slopes required
- Requires an shower drain the exact length



Installation against three walls

Minimalist installation against three walls: Install this shower drain on the rear wall and between the side walls. This type of installation requires a one-sided slope the exact length of the shower drain.

- hansgrohe shower channel installed against the rear and two side walls
- One slope is required
- Requires an shower drain the exact length



Adjustable frame height

The drain channel must close the surrounding area without creating a trip hazard. The level of the cover can still be adjusted using the height adjustment frame, even after the screed has been poured.

- High-quality hansgrohe shower channel
- Easy adjustment to the surrounding tiled area thanks to the height-adjustable frame
- Flexible installation



Shower channel that can be shortened

This shower channel can be shortened, so you can adapt it to the structural requirements.

- Adaptable hansgrohe shower channel
- Can be shortened on-site
- Flexible installation



High drainage capacity

A truly great shower experience from a powerful overhead shower places high demands on drainage. This drain is designed for high flow volumes of up to 60 l/min, preventing flooding.

- High flow rate of up to 60 l/min
- Avoids flooding
- Maximum enjoyment



Easy to clean siphon

The aerodynamic geometry and high flow rate of the innovative hansgrohe Dryphon allows dirt and hair to pass through smoothly, reducing the need for cleaning.

- Easier cleaning

You can find more information at **pro.hansgrohe.com/your-selling-points/innovative-technologies**

Personality-infused design, thanks to coloured fittings

FinishPlus — new surfaces bring new individuality to the bathroom

Today's bathroom increasingly reflects our own personal style. FinishPlus has been developed to provide five new surface designs in matte and metallic tones, expanding your style options far beyond classic chrome. The high-quality surfaces offer a wide range of design options, giving you brand new ways of expressing yourself.



670 Matte Black: Getting back to basics with black and white contrasts.



700 Matte White: Cheeky, unconventional freshness.



340 Brushed Black Chrome: A dark, partially reflective surface creates asophisticated aesthetic.



140 Brushed Bronze: Soft natural tones and subtle nuances.



990 Polished Gold Optic: Glamorous look for aesthetic extravagance.



000 Chrome: Timeless classic paired with dainty elegance.

Advantages and benefits

- A large selection for self-expression: new tap colours and complementary products
- Immediate availability: easy ordering process as products are kept in stock
- Resilient and scratch-proof, with tactile appeal













Make washing-up a breeze

Spray types — for a streamlined workflow in every kitchen



Laminar spray
Crystal clear waterspray without added air, which prevents splashing and is ideal for filling large containers, like vases, quickly.



Normal spray
Fuller, lighter and softer droplets from an aerated spray, thanks to AirPower technology.



Shower spray
A gently water-saving cleaning spray, suitable for rinsing the sink.

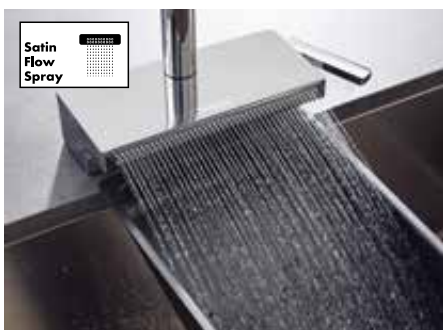

SatinFlow spray
The soft, flat spray is splash-free, making it highly efficient at saving water.

Clever functions mean more efficiency

Technologies to make life easier



Select

Select technology makes using the kitchen tap easier than ever before, because the water can be turned on and off with just one click. You can do that with your elbow or even the back of your hand, keeping your taps clean when you're cooking or washing up.

- Convenient use and optimal water flow
- Stop and start the water flow at the touch of a button during operation
- Can also be operated with an arm or elbow



QuickClean

QuickClean means flexible silicone discs. Dirt and limescale deposits can be simply rubbed off with your finger – low effort with no need to use cleaning products, extending you shower's lifespan.

- Fast and easy cleaning
- Ultra high quality and tear resistant silicone
- For a long lifetime and functionality



EcoSmart

Thanks to EcoSmart technology with added air, certain hansgrohe kitchen taps consume only 6 l/min. This reduced water volume means less water needs to be heated up, which also saves valuable energy for your customer.

- Air enriched water for a full, sparkling spray
- Lower energy consumption means fewer CO_2 emissions
- Lower water and energy consumption for double efficiency

You can find more information at **pro.hansgrohe.com/your-selling-points/innovative-technologies**

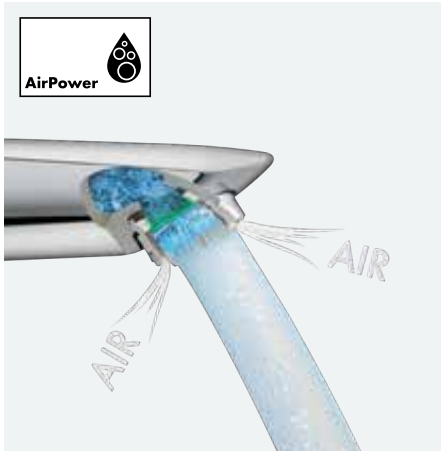

AirPower

AirPower works by drawing in air via the jet outlet. This addition of air enriches the inc ming water, making the jet fuller, lighter and softer. AirPower cleverly delivers a high jet volume with less water.

- Fuller, lighter and softer droplets, for an enhanced water jet
- Less risk of splashing
- High efficiency helps to reduce water consumption



ComfortZone

Kitchen taps with an extra high spout offer additional space, making them ideal for filling large pots and tall vases. For those that swivel, the rotation can be set incrementally up to 360°.

- The optimum height for all needs
- A flexible swivel area prevents over-rotation
- Ultimate freedom to move



Pull-out function

More flexibility, thanks to the pull-out function. This pull-out tap extends your working area at the sink, making it easier to fill containers or water plants.

- Standard extension max. 50 cm
- The sBox extends the working space to 76 cm



Lower in front of a window

With kitchen windows that open inwards, conventional taps often get in the way. A hansgrohe tap with TiltFunction solves this. It can be easily lifted and lowered, so that the window can be open and shut easily.

- Ideal for installation in front of a window
- Easily lifted up and folded down
- For easy opening and closing of a window

You can find more information a **pro.hansgrohe.com/your-selling-points/innovative-technologies**



sBox kitchen

With extendible kitchen taps and sink combi units, the sBox ensures that the hose can be pulled out and stowed away safely and easily. The 52 cm-tall box fits into all standard base units from 74 cm upwards. Alternatively, products can also be purchased without the sBox.

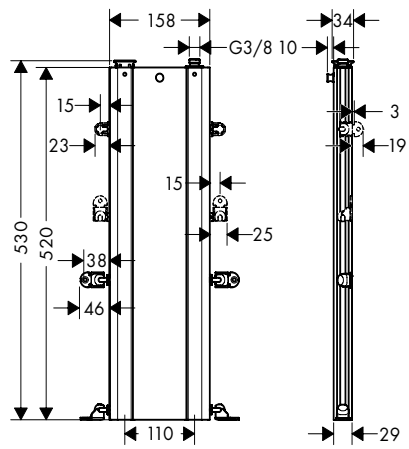

- Smooth and safe retrieval of the hose, without getting in the way of the drawer or waste separation system
- Multiple installation options in the base unit thanks to flexible mounting elements
- For a more organised sink cabinet
- The hose weight in the sBox ensures smooth and quiet use
- Optional accessories:
  An additional spacer rail that allows for installation lower in the cabinet body

Installation options



Best placement – vertically below kitchen tap:
The lower brackets are firmly screwed to the base. The upper brackets can be either screwed to or suspended on the rear panel. The mounting elements can be moved and rotated 360°. This makes installation fast and easy.



Vertically below kitchen tap, tilted backwards or forwards:
The tilted back assembly is recommended if the rear wall is offset to the front or if there are obstacles on the floor. The brackets are all aligned to the front. This way, the sBox can simply be tilted forward and clicked out of all brackets. This enables quick and easy cleaning. The sBox can be tilted backwards or forwards. Maximum recommended tilt angle: ± 20°.



At the back of the rear wall, tilted sideways:
Laterally tilted installation is an option where there are obstacles on the ground such as waste pull-out or drainage systems, or when angle valves are difficult to access. The brackets can be screwed to the base, sides or rear panel.
Maximum recommended tilt angle: ± 20°.



Tilted and offset on the side wall:
The installation on the side panel is ideal for corner sinks, sinks with draining boards or sinks with tap holes that are positioned to the side. All the brackets are screwed to the side. You should avoid parallel displacement of the sBox. If displacement is required for the installation, there must not be more than 30mm between the tap and outlet axis of the sBox.



CoolStart

On standard taps the continuous flow heater or circulation pump starts up immediately when the handle is in the middle position, but with CoolStart taps the hot water is only added when the lever is moved to the left. This cuts down on energy needs, CO_2 emissions and costs.

- Basic setting enables only cold water to flow
- Potential for water, energy and financial savings
- Special user ergonomics (the lever only needs to be moved to the left for hot water)



LowPressure

Kitchen fittings equipped with LowPressure technology can be used at sinks with a water pressure of just 0.2 bar. A low pressure fitting for cold water pipes with boiler/heat storage.

- hansgrohe low pressure fittings
- Suitable for cold water pipes with boiler/heat storage tanks
- Suitable for water pressure of 0.2 bar or more

High-quality designs for the sink

FinishPlus — for kitchens with personality

Customers are increasingly looking for ways to stamp their individuality onto their kitchen. We can help that happen, offering kitchen taps in various coloured finishes. In addition to chrome and stainless steel, taps in a matte black finish are more popular than ever before. And with FinishPlus you can fulfil your customer's every dream, creating a kitchen bursting with personality.



670 Matte Black: Getting back to basics with black and white contrasts.



800 stainless steel finish: A harmonious look



000 Chrome: Timeless classic paired with dainty elegance.

Advantages and benefits

- A large selection for self-expression: new tap colours and complementary products
- Immediate availability: easy ordering process as products are kept in stock
- Resilient and scratch-proof, with tactile appeal

Hand showers

Crometta 100

	Code no.	available up to
Hand shower Multi	26823400	12/31/2023
Hand shower Vario	26824400	12/31/2023
Hand shower 1jet	26825400	12/31/2023
Hand shower Vario EcoSmart 9 l/min	26827400	12/31/2023
Hand shower 1jet EcoSmart 9 l/min	26828400	12/31/2023
Hand shower Vario EcoSmart 6 l/min	26834400	12/31/2023

Shower sets / Shower bars / Shower holder

Raindance Select E shower sets

	Code no.	available up to
Shower set 150 3jet with shower bar 65 cm and soap dish	27856400	12/31/2022
Shower set 150 3jet with shower bar 90 cm and soap dish	27857400	12/31/2022

Raindance Select S shower sets

	Code no.	available up to
Shower set 120 3jet EcoSmart 9 l/min with shower bar 65 cm and soap dish	26632400	12/31/2022
Shower set 120 3jet EcoSmart 9 l/min with shower bar 90 cm and soap dish	26633400	12/31/2022
Shower set 120 3jet with shower bar 150 cm and soap dishes	27646400	12/31/2022
Shower set 120 3jet EcoSmart 9 l/min with shower bar 150 cm and soap dishes	27647000 27647400	12/31/2022 12/31/2022
Shower set 120 3jet EcoSmart 9 l/min with shower bar 90 cm and soap dish	27649400	12/31/2022
Shower set 150 3jet with shower bar 65 cm and soap dish	27802400	12/31/2022

Unica Comfort shower sets

	Code no.	available up to
Shower set 120 3jet with shower bar 65 cm	26320400	12/31/2022
Shower set 120 3jet EcoSmart 9 l/min with shower bar 65 cm	26321000 26321400	12/31/2022 12/31/2022
Shower set 120 3jet EcoSmart 9 l/min with shower bar 90 cm	26323400	12/31/2022
Shower set 120 3jet with shower bar 110 cm left	26324400	12/31/2022
Shower set 120 3jet EcoSmart 9 l/min with shower bar 110 cm left	26325000 26325400	12/31/2022 12/31/2022
Shower set 120 3jet with shower bar 110 cm right	26326400	12/31/2022
Shower set 120 3jet EcoSmart 9 l/min with shower bar 110 cm right	26327000 26327400	12/31/2022 12/31/2022

Croma 100 shower sets

	Code no.	available up to
Shower set Multi with shower bar Unica'Reno Lift 105 cm	27791000	12/31/2022

Crometta 100 shower sets

	Code no.	available up to
Shower set Multi with shower bar 65 cm	26650400	12/31/2023
Shower set Vario with shower bar 65 cm	26651400	12/31/2023
Shower set 1jet with shower bar 65 cm	26652400	12/31/2023

Shower sets / Shower bars / Shower holder

Crometta 100 shower sets

	Code no.	available up to
Shower set Vario EcoSmart 9 l/min with shower bar 65 cm	26654400	12/31/2023
Shower set 1jet EcoSmart 9 l/min with shower bar 65 cm	26655400	12/31/2023
Shower set Multi with shower bar 90 cm	26656400	12/31/2023
Shower set Vario with shower bar 90 cm	26657400	12/31/2023
Shower set 1jet with shower bar 90 cm	26658400	12/31/2023
Shower system for exposed installation Vario with Ecostat universal thermostat and shower bar 65 cm	27030400	12/31/2023
Shower system for exposed installation Vario with Ecostat universal thermostat and shower bar 90 cm	27031400	12/31/2023

Wall bars Unica'E

	Code no.	available up to
Unica Shower bar E 90 cm with Isiflex shower hose 160 cm	27640600 27645400 27645600	12/31/2022 12/31/2022 12/31/2022

Raindance Select E shower holder sets

	Code no.	available up to
Shower holder set 120 3jet with shower hose 125 cm	26700400	12/31/2022

Raindance Select S shower holder sets

	Code no.	available up to
Shower holder set 120 3jet with shower hose 125 cm	26701400	12/31/2022

Crometta 100 shower holder sets

	Code no.	available up to
Shower holder set 1jet with shower hose 125 cm	26664400	12/31/2023
Shower holder set 1jet with shower hose 160 cm	26665400	12/31/2023
Shower holder set Vario with shower hose 125 cm	26666400	12/31/2023

Overhead showers

Raindance Select E

	Code no.	available up to
Overhead shower 300 3jet with shower arm	26468000 26468400	12/31/2022 12/31/2022
Overhead shower 300 2jet EcoSmart 9 l/min with ceiling connector	26608000 26608400	12/31/2022 12/31/2022
Overhead shower 300 2jet EcoSmart 9 l/min with shower arm	26609000 26609400	12/31/2022 12/31/2022
Shower system for concealed installation with ShowerSelect thermostat	27296000	12/31/2022
Overhead shower 300 2jet with ceiling connector	27384000 27384400	12/31/2022 12/31/2022
Overhead shower 300 2jet with shower arm	27385000 27385400	12/31/2022 12/31/2022

Raindance E

	Code no.	available up to
Overhead shower 240 1jet EcoSmart 9 l/min with ceiling connector	27383000	12/31/2022

Raindance S

	Code no.	available up to
Overhead shower 180 1jet EcoSmart 9 l/min with ceiling connector	27464000	12/31/2022

Overhead showers

Croma Select E

	Code no.	available up to
Overhead shower 180 2jet EcoSmart 9 l/min	26523400	12/31/2022

Croma

	Code no.	available up to
Overhead shower 220 1jet LowPressure	26734000	12/31/2022
Overhead shower 160 1jet	27450000	12/31/2022

Crometta

	Code no.	available up to
Overhead shower 160 1jet LowPressure	26576400	12/31/2022
Overhead shower 160 1jet	26577000	12/31/2022
	26577400	12/31/2022
Overhead shower 160 1jet EcoSmart 9 l/min	26578000	12/31/2022
	26578400	12/31/2022
Bundle hand shower Vario EcoSmart with shower hose 160 cm	26994400	12/31/2023

Showerpipes

Croma

	Code no.	available up to
Showerpipe 160 1jet with thermostat	27135000	12/31/2023
Showerpipe 160 1jet with single lever mixer	27154000	12/31/2022

Crometta

	Code no.	available up to
Showerpipe 160 1jet with thermostat	27264400	12/31/2022
Showerpipe 160 1jet EcoSmart 9 l/min with thermostat	27265400	12/31/2022
Showerpipe 160 1jet with single lever mixer	27266400	12/31/2022

Thermostatic mixers/ valves

Thermostatic mixers and combis for exposed installation

	Code no.	available up to
Bath thermostat 700 for exposed installation	13183400	12/31/2022

RainSelect thermostatic mixers for concealed installation

	Code no.	available up to
Basic set for 2 functions bath tub	15314180	12/31/2022
Thermostat for concealed installation for 2 functions bath tub	15359000	12/31/2022
	15359400	12/31/2022
	15359600	12/31/2022

ShowerSelect glass thermostatic mixers for concealed installation

	Code no.	available up to
Thermostat HighFlow for concealed installation	15734600	12/31/2022
Thermostat HighFlow for concealed installation for 1 function and additional outlet	15735600	12/31/2022
Valve for concealed installation for 3 functions	15736600	12/31/2022
Thermostat for concealed installation for 1 function	15737600	12/31/2022
Thermostat for concealed installation for 2 functions	15738600	12/31/2022

PuraVida

	Code no.	available up to
Single lever basin mixer 110 with push-open waste set	15070000	12/31/2022
	15070400	12/31/2022
Single lever basin mixer 240 for washbowls with push-open waste set	15072000	12/31/2022
	15072400	12/31/2022
Single lever basin mixer 110 with pop-up waste set	15074000	12/31/2022
	15074400	12/31/2022
Single lever basin mixer 100 for hand washbasins with push-open waste set	15075000	12/31/2022
	15075400	12/31/2022
Single lever basin mixer 200 with push-open waste set	15081000	12/31/2022
	15081400	12/31/2022
Single lever basin mixer for concealed installation wall-mounted with spout 16,5 cm	15084000	12/31/2022
	15084400	12/31/2022
Single lever basin mixer for concealed installation wall-mounted with spout 22,5 cm	15085000	12/31/2022
	15085400	12/31/2022
Electronic basin mixer with temperature control battery operation	15170000	12/31/2022
	15170400	12/31/2022
Electronic basin mixer with temperature control mains connection 230 V	15172000	12/31/2022
Single lever bidet mixer with pop-up waste set	15270000	12/31/2022
	15270400	12/31/2022
Single lever basin mixer with bidette hand shower and shower hose 160 cm	15275400	12/31/2022
3-hole rim mounted single lever bath mixer	15432000	12/31/2022
	15432400	12/31/2022
Single lever bath mixer for concealed installation for iBox universal	15445000	12/31/2022
	15445400	12/31/2022
Single lever bath mixer for concealed installation with integrated security combination according to EN1717 for iBox universal	15447000	12/31/2022
	15447400	12/31/2022
Single lever bath mixer for exposed installation	15472000	12/31/2022
	15472400	12/31/2022
Single lever bath mixer floor-standing	15473000	12/31/2022
	15473400	12/31/2022
Single lever shower mixer for concealed installation for iBox universal	15665000	12/31/2022
	15665400	12/31/2022
Single lever shower mixer for exposed installation	15672000	12/31/2022
	15672400	12/31/2022
Thermostat for concealed installation with shut-off/ diverter valve	15771000	12/31/2022
	15771400	12/31/2022
Shut-off/ diverter valve iControl for concealed installation for 3 functions	15777000	12/31/2022
Shut-off valve for concealed installation	15978000	12/31/2022
	15978400	12/31/2022
Overhead shower 400 1jet with ceiling connector	27390000	12/31/2022
	27390400	12/31/2022
Overhead shower 400 1jet with shower arm	27437000	12/31/2022
	27437400	12/31/2022
Unica Shower bar PuraVida 90 cm with Isiflex shower hose 160 cm	27844000	12/31/2022
Shower set with shower bar 90 cm	27853000	12/31/2022
	27853400	12/31/2022
Body shower 100 1jet	28430000	12/31/2023
	28430400	12/31/2023
Hand shower 150 3jet	28557000	12/31/2022
	28557400	12/31/2022
Baton hand shower 120 1jet	28558000	12/31/2023
	28558400	12/31/2023
Hand shower 3jet EcoSmart 9 l/min	28567000	12/31/2022
	28567400	12/31/2022

PuraVida

	Code no.	available up to
Baton hand shower 120 1jet EcoSmart	28568000	12/31/2023
9 l/min	28568400	12/31/2023
Towel hook	41501000	12/31/2022
Soap dish	41502000	12/31/2022
Liquid soap dispenser	41503000	12/31/2022
Toothbrush tumbler	41504000	12/31/2022
Toilet brush holder wall-mounted	41505000	12/31/2022
Bath towel rail	41506000	12/31/2022
Roll holder with cover	41508000	12/31/2022
Towel holder twin-handle	41512000	12/31/2022
Grab rail	41513000	12/31/2022
Spare roll holder	41518000	12/31/2022

Metropol

Metropol Classic

Single lever basin mixer 110	31300000	12/31/2022
with lever handle and pop-up waste set	31300090	12/31/2022
Single lever basin mixer 110	31301000	12/31/2022
with lever handle without waste set	31301090	12/31/2022
Single lever basin mixer 160 with lever	31302000	12/31/2022
handle for washbowls with pop-up waste set	31302090	12/31/2022
Single lever basin mixer 260 with lever	31303000	12/31/2022
handle for washbowls with pop-up waste set	31303090	12/31/2022
3-hole basin mixer 110	31306000	12/31/2022
with cross handles and pop-up waste set	31306090	12/31/2022
3-hole basin mixer 160	31307000	12/31/2022
with cross handles and pop-up waste set	31307090	12/31/2022
Single lever bidet mixer	31320000	12/31/2022
with lever handle and pop-up waste set	31320090	12/31/2022
3-hole basin mixer 110	31330000	12/31/2022
with lever handles and pop-up waste set	31330090	12/31/2022
3-hole basin mixer 160	31331000	12/31/2022
with lever handles and pop-up waste set	31331090	12/31/2022
Single lever bath mixer	31340000	12/31/2022
for exposed installation with lever handle	31340090	12/31/2022
Single lever bath mixer	31345000	12/31/2022
for concealed installation	31345090	12/31/2022
with lever handle for iBox universal		
Single lever shower mixer	31360000	12/31/2022
for exposed installation with lever handle	31360090	12/31/2022
Single lever shower mixer	31365000	12/31/2022
for concealed installation	31365090	12/31/2022
with lever handle for iBox universal		
4-hole rim mounted bath mixer	31441000	12/31/2022
with lever handles	31441090	12/31/2022
Single lever bath mixer floor-standing	31445000	12/31/2022
with lever handle	31445090	12/31/2022
4-hole rim mounted bath mixer	31449000	12/31/2022
with cross handles	31449090	12/31/2022

Talis

	Code no.	available up to
Talis Single lever basin mixer 80	32040000	12/31/2022
with pop-up waste set		
Talis Single lever basin mixer 80	32041000	12/31/2022
without waste set		
Talis Single lever basin mixer 210	32082000	12/31/2022
with swivel spout and push-open waste set		
Talis Single lever basin mixer 210	32084000	12/31/2022
with swivel spout and pop-up waste set		
Talis Single lever bidet mixer	32240000	12/31/2022
with pop-up waste set		
Talis Single lever bath mixer	32440000	12/31/2022
for exposed installation		
Talis Single lever shower mixer	32640000	12/31/2022
for exposed installation		

Focus

Ventil für Wandmontage	31131000	12/31/2022
ohne Ablaufgarnitur		
Bidet Set mit Unterdusche	31629000	12/31/2022
Einhebel-Waschtischmischer 70	31738000	12/31/2022
mit 2 Durchflussmengen		
mit Zugstangen-Ablaufgarnitur		
4-Loch Wannenrandarmatur	31936000	12/31/2022
Einhebel-Waschtischmischer 70 LowFlow	31951000	12/31/2022
3,5 l/min mit Zugstangen-Ablaufgarnitur		

Novus

Single lever basin mixer 70	71020000	12/31/2022
with pop-up waste set		
Single lever basin mixer 70 without waste set	71021000	12/31/2022
Single lever basin mixer 70 CoolStart	71022000	12/31/2022
with push-open waste set		
Single lever basin mixer 70 LowFlow	71024000	12.31.2022
with push-open waste set		
Single lever basin mixer 100	71030000	12/31/2022
with pop-up waste set		
Single lever basin mixer 100	71031000	12/31/2022
without waste set		
Single lever basin mixer 100 CoolStart	71032000	12/31/2022
with push-open waste set		
Single lever basin mixer 100 LowFlow	71034000	12/31/2022
with push-open waste set		
Single lever basin mixer 100 for vented hot	71036000	12/31/2022
water cylinders with push-open waste set		
Single lever bath mixer	71040000	12/31/2022
for exposed installation		
Single lever bath mixer	71041000	12/31/2022
for exposed installation		
with centre distance 15.3 cm		
Single lever bath mixer	71042000	12/31/2022
for exposed installation with 2 flow rates		

Novus

	Code no.	available up to
2-hole rim mounted bath mixer	71043000	12/31/2022
2-hole rim mounted bath mixer with diverter valve and Croma Select S hand shower	71044000	12/31/2022
Single lever bath mixer for concealed installation for iBox universal	71045000	12/31/2022
Single lever bath mixer for concealed installation with integrated security combination according to EN1717 for iBox universal	71046000	12/31/2022
Single lever bath mixer for concealed installation	71047000	12/31/2022
Pillar tap 70 for cold water without waste set	71050000	12/31/2022
Single lever shower mixer for exposed installation	71060000	12/31/2022
Single lever shower mixer for exposed installation with centre distance 15.3 cm	71061000	12/31/2022
Single lever shower mixer for exposed installation with 2 flow rates	71062000	12/31/2022
Single lever shower mixer for concealed installation	71063000	12/31/2022
Single lever shower mixer for concealed installation for iBox universal	71065000	12/31/2022
Single lever shower mixer HighFlow for concealed installation for iBox universal	71066000	12/31/2022
Single lever shower mixer for concealed installation	71067000	12/31/2022
Shower mixer set for concealed installation	71068000	12/31/2022
Single lever basin mixer 230 with pop-up waste set	71123000	12/31/2022
Single lever basin mixer 230 without waste set	71124000	12/31/2022
Single lever basin mixer 240 with swivel spout and pop-up waste set	71126000	12/31/2022
Single lever basin mixer for concealed installation wall-mounted with spout 19,5 cm	71127000	12/31/2022
Single lever basin mixer 240 with swivel spout without waste set	71128000	12/31/2022
3-hole basin mixer 100 with pop-up waste set	71140000	12/31/2022
Single lever bidet mixer 70 with pop-up waste set	71142000	12/31/2022
Single lever basin mixer 70 with bidette hand shower and shower hose 160 cm	71144000	12/31/2022
Bidet set with vertical spray	71145000	12/31/2022
Single lever bath and shower mixer Monotrou	71321000	12/31/2022
Single lever bath mixer Monotrou	71322000	12/31/2022
Single lever bath and shower mixer Monotrou with 2 flow rates	71324000	12/31/2022
4-hole rim mounted bath mixer	71333000	12/31/2022
Single lever basin mixer 70 with extra long handle 11,8 cm and pop-up waste set	71920000	12/31/2022
Single lever basin mixer 100 with extra long handle 11,8 cm and pop-up waste set	71921000	12/31/2022

Novus

	Code no.	available up to
Single lever basin mixer for exposed installation with extra long handle 11,8 cm	71923000	12/31/2022
Single lever shower mixer for exposed installation with extra long handle 11,8 cm	71926000	12/31/2022

Wastes and overflow

Bath filler with wastes and overflow for bath tubs

Flexaplus S Finish set waste and overflow set	58186820	12/31/2022

Wastes and overflow for bath tubs

Staro Complete set waste set 52	60060000	12/31/2022

Wastes for basin/ bidet

Waste set non-closing for washbasins	50001800	12/31/2022

Kitchen mixers and sinks

Metris Select M71

2-hole single lever kitchen mixer 220, pull-out spray, 2jet, sBox	73805000 73805800	12/31/2022 12/31/2022
2-hole single lever kitchen mixer 320, pull-out spray, 2jet, sBox	73806000 73806800	12/31/2022 12/31/2022
2-hole single lever kitchen mixer 220, Eco, pull-out spray, 2jet, sBox	73826000	12/31/2022
2-hole single lever kitchen mixer 320, Eco, pull-out spray, 2jet, sBox	73827000	12/31/2022

Talis M52

Single lever kitchen mixer 230, 7 l/min, pull-out spray, 2jet	14851000	12/31/2022
Single lever kitchen mixer 260, 7 l/min, pull-out spout, 1jet	14853000	12/31/2022
Single lever kitchen mixer 270, 1jet	14870000	12/31/2022
Single lever kitchen mixer 260, installation in front of a window, pull-out spout, 1jet	14872000	12/31/2022
Single lever kitchen mixer 270, device shut-off valve, 1jet	14875000	12/31/2022
Single lever kitchen mixer 220, installation in front of a window, pull-out spray, 2jet	14877000	12/31/2022
Single lever kitchen mixer 220, Eco, pull-out spray, 2jet	72831000	12/31/2022
Single lever kitchen mixer 260, Eco, pull-out spout, 1jet	72832000	12/31/2022
Single lever kitchen mixer 220, installation in front of a window, pull-out spray, 2jet, sBox	73863000 73863800	12/31/2022 12/31/2022
Single lever kitchen mixer 260, installation in front of a window, pull-out spout, 1jet, sBox	73864000 73864800	12/31/2022 12/31/2022
Single lever kitchen mixer 170, Eco, pull-out spray, 2jet, sBox	73869000	12/31/2022
Single lever kitchen mixer 260, Eco, pull-out spout, 1jet, sBox	73878000	12/31/2022
Single lever kitchen mixer 220, Eco, pull-out spray, 2jet, sBox	73879000	12/31/2022

	Code no.	available up to
Kitchen mixers and sinks		
Focus M41		
Single lever kitchen mixer E, 160, 1jet	31780000	12/31/2022
Single lever kitchen mixer E, 160, LowPressure/vented hot water cylinders, 1jet	31784000	12/31/2022
Zubehör für Edelstahlspülen		
D14-12 Automatic waste and overflow set for single bowl Select	43941800	12/31/2022
D15-12 Automatic waste and overflow set for double bowl Select	43942800	12/31/2022
Zubehör für Granitspülen		
D16-12 Automatic waste and overflow set for single bowl granite Select	43947000	12/31/2022
D17-12 Automatic waste and overflow set for double bowl granite Select	43948000	12/31/2022

Hand showers

	Code no.
Raindance Select S	
Hand shower 120 3jet PowderRain	26014140 26014340 26014670 26014700 26014990
Pulsify Select S	
Select Hand shower 105 3jet Activation	24100000 24100670 24100700
Select Hand shower 105 3jet Activation EcoSmart	24101000 24101670 24101700
Select Hand shower 105 3jet Relaxation	24110000 24110670 24110700
Select Hand shower 105 3jet Relaxation EcoSmart	24111000 24111670 24111700
Pulsify S	
Hand shower 105 1jet	24120000 24120670 24120700
Hand shower 105 1jet Green	24121000 24121670 24121700
Croma Select E	
Hand shower 1jet	26814140 26814340 26814670 26814700 26814990
Hand shower 1jet EcoSmart 9 l/min	26815140 26815340 26815670 26815700 26815990
Vernis Blend	
Hand shower Vario project pack (12 pcs.)	26085000
Hand shower Vario Green	26090000
Hand shower Vario	26270000 26270670
Hand shower Vario EcoSmart	26340000 26340670
Jocolino	
Children hand shower lion 2jet	28760210
Children hand shower zebra 2jet	28787640
Children hand shower crocodile 2jet	28788570
DogShower	
Dogs hand shower 150 3jet Select	26640540 26640560 26640670 26640700

Shower sets / Shower bars / Shower holder

	Code no.
Pulsify Select S shower sets	
Select Shower set 105 3jet Relaxation with shower bar 65 cm	24160000 24160670 24160700
Select Shower set 105 3jet Relaxation EcoSmart with shower bar 65 cm	24161000 24161670 24161700
Select Shower set 105 3jet Relaxation with shower bar 90 cm	24170000 24170670 24170700
Select Shower set 105 3jet Relaxation EcoSmart with shower bar 90 cm	24171000 24171670 24171699
Vernis Blend shower sets	
Shower set Vario with shower bar Crometta 65 cm	26275000
Shower set Vario EcoSmart with shower bar Crometta 65 cm	26279000
Shower set Vario with shower bar 65 cm project pack (6 pieces)	26371000
Shower set Vario with shower bar 65 cm	26422670
Shower set Vario EcoSmart with shower bar S Puro 65 cm	26423670
Modern style wall bars	
Shower bar Pulsify S 65 cm with push slider and Isiflex shower hose 160 cm	24400000
Shower bar Pulsify S 90 cm with push slider and Isiflex shower hose 160 cm	24401000
Pulsify Select S shower holder sets	
Select Shower holder set 105 3jet Relaxation with shower hose 125 cm	24302000 24302670 24302700
Select Shower holder set 105 3jet Relaxation with shower hose 160 cm	24303000 24303670 24303700
Pulsify S shower holder sets	
Shower holder set 105 1jet with shower hose 125 cm	24301000 24301670 24301700
Vernis Blend shower holder sets	
Shower holder set Vario with shower hose 160 cm	26273000
Shower holder set Vario EcoSmart with shower hose 160 cm	26278000

Overhead showers

	Code no.
Raindance E	
Shower system 300 1jet with ShowerSelect Square	27952000
Raindance S	
Shower system 240 1 jet PowderRain with ShowerSelect S	27951000
Shower system 240 1 jet PowderRain with ShowerSelect S	27959670
Pulsify S	
Overhead shower 105 1jet	24130000 24130670 24130700

Overhead showers

Pulsify S

	Code no.
Overhead shower 105 1jet Green	24132000 24132670 24132700
Overhead shower 260 1jet	24140000 24140670 24140700
Overhead shower 260 1jet EcoSmart	24141000 24141670 24141700
Overhead shower 260 2jet with wall connector	24150000 24150670 24150700
Overhead shower 260 2jet EcoSmart with wall connector	24151000 24151670 24151700

Croma E

Shower system 280 1jet with Ecostat E	27953000

Croma

Shower system 280 1jet with Ecostat S	27954000
Shower system 280 1jet with Ecostat S	27961670

Crometta E

Shower system 240 1jet with single lever mixer	27957000

Crometta S

Shower system 240 1jet with single lever mixer	27958000

Vernis Blend

Overhead shower 200 1jet Green	26093000
Overhead shower 200 1jet LowPressure	26095000
Overhead shower 200 1jet	26271000 26271670
Overhead shower 200 1jet EcoSmart	26277000 26277670
Overhead shower 200 1jet project pack (12 pcs.)	26365000

Vernis Shape

Overhead shower 230 1jet Green	26094000
Overhead shower 200 1jet LowPressure	26096000
Overhead shower 230 1jet	26281000 26281670
Overhead shower 230 1jet EcoSmart	26283000 26283670
Overhead shower 230 1jet project pack (12 pcs.)	26579000

Shower arms for overhead showers

Wall connector for overhead shower 105	24139000 24139670 24139700
Wall connector for overhead shower 260	24149000 24149670 24149700
Shower arm 24 cm	26405000 26405670
Shower arm 24 cm	27809000 27809670

Ceiling connectors for overhead showers

Ceiling connector 10 cm	26406000 26406670
Ceiling connector 30 cm	26407000 26407670
Ceiling connector 10 cm	27479140 27479340 27479670 27479700 27479990
Ceiling connector 10 cm	27804000 27804670
Ceiling connector 30 cm	27805000 27805670

Showerpipes

Pulsify S

Showerpipe 260 1jet with ShowerTablet Select 400	24220000
Showerpipe 260 1jet EcoSmart with ShowerTablet Select 400	24221000
Showerpipe 260 1jet with bath thermostat ShowerTablet 400	24230000
Showerpipe 260 2jet with ShowerTablet Select 400	24240000 24240670 24240700
Showerpipe 260 2jet EcoSmart with ShowerTablet Select 400	24241000 24241670 24241700

Vernis Blend

Showerpipe 200 1jet EcoSmart with bath thermostat	26079000
Showerpipe 200 1jet EcoSmart with thermostat	26089000 26089670
Showerpipe 200 1jet Reno EcoSmart	26099000 26099670
Showerpipe 200 1jet Reno	26272000 26272670
Showerpipe 200 1jet with bath thermostat	26274000
Showerpipe 200 1jet with thermostat	26276000 26276670
Showerpipe 200 1jet with thermostat project pack (2 pcs.)	26285000
Showerpipe 200 1jet Green with thermostat	26318000

Vernis Shape

Showerpipe 230 1jet EcoSmart with thermostat	26097000 26097670
Showerpipe 230 1jet EcoSmart with bath thermostat	26098000
Showerpipe 230 1jet Reno	26282000 26282670
Showerpipe 230 1jet with bath thermostat	26284000
Showerpipe 230 1jet with thermostat	26286000 26286670
Showerpipe 230 1jet with shower thermostat project pack (2 pcs.)	26287000
Showerpipe 230 1jet Reno EcoSmart	26289000 26289670
Showerpipe 230 1jet Green with thermostat	26319000

	Code no.

Thermostatic mixers/ valves

Thermostatic mixers and combis for exposed installation

Select Shower system 105 3jet Relaxation with hand shower, thermostat, shower bar 65 cm, slider and shower hose	24260000
Select Shower system 105 3jet Relaxation with hand shower, thermostat, shower bar 90 cm, slider and shower hose	24270000
Bath thermostat 400 for exposed installation	24340000 24340670 24340700
Shower thermostat 400 for exposed installation	24360000 24360670 24360700

iBox Universal

Extension elements

Extension element	13593140 13593340 13593670 13593700 13593990
Extension element 15 cm	13597140 13597340 13597670 13597700 13597990
Extension element	15597140 15597340 15597670 15597700 15597990

Finoris

Basic set for 4-hole rim mounted bath mixer	13440180
Single lever basin mixer 100 with push-open waste set	76010000 76010670 76010700
Pillar tap 100 for cold water without waste set	76013000 76013670 76013700
Single lever basin mixer 110 with pop-up waste set	76020000 76020670 76020700
Single lever basin mixer 110 with push-open waste set	76023000 76023670 76023700
Single lever basin mixer 110 CoolStart with push-open waste set	76024000 76024670 76024700
3-hole basin mixer 110 with push-open waste set	76033000 76033670 76033700
3-hole basin mixer 160 with push-open waste set	76034000 76034670 76034700
Single lever basin mixer for concealed installation wall-mounted with spout 22,8 cm	76050000 76050670 76050700
Single lever basin mixer for concealed installation wall-mounted with spout 16,8 cm	76051000 76051670 76051700

	Code no.
Single lever basin mixer 230 with swivel spout and push-open waste set	76060000 76060670 76060700
Single lever basin mixer 230 with pull-out spray, 2jet and push-open waste set	76063000 76063670 76063700
Single lever basin mixer 260 for washbowls with push-open waste set	76070000 76070670 76070700
Single lever bidet mixer with push-open waste set	76200000 76200670 76200700
Single lever basin mixer 110 with bidette hand shower and shower hose 160 cm	76210000 76210670
Single lever basin mixer 260 with bidette hand shower and shower hose 160 cm	76220000 76220670
Bath spout	76410000 76410670 76410700
Single lever bath mixer for concealed installation for iBox universal	76415000 76415670 76415700
Single lever bath mixer for concealed installation with integrated security combination according to EN1717 for iBox universal	76416000 76416670 76416700
Single lever bath mixer for exposed installation	76420000 76420670 76420700
4-hole rim mounted bath mixer with sBox	76444000 76444670 76444700
Single lever bath mixer floor-standing	76445000 76445670 76445700
Single lever shower mixer for concealed installation for iBox universal	76615000 76615670 76615700
Single lever shower mixer for exposed installation	76620000 76620670 76620700

Vivenis

Basic set for 4-hole rim mounted bath mixer	13440180
Single lever basin mixer 80 with pop-up waste set	75010000 75010670 75010700
Single lever basin mixer 80 without waste set	75012000 75012670 75012700
Pillar tap 80 for cold water without waste set	75013000 75013670 75013700
Single lever basin mixer 110 with pop-up waste set	75020000 75020670 75020700
Single lever basin mixer 110 without waste set	75022000 75022670 75022700
Single lever basin mixer 110 CoolStart with pop-up waste set	75023000 75023670 75023700

Vivenis

	Code no.
Single lever basin mixer 110 CoolStart without waste set	75024000 75024670 75024700
Single lever basin mixer 210 with swivel spout and pop-up waste set	75030000 75030670 75030700
Single lever basin mixer 210 with swivel spout without waste set	75032000 75032670 75032700
3-hole basin mixer 90 with pop-up waste set	75033000 75033670 75033700
Single lever basin mixer 250 for washbowls with pop-up waste set	75040000 75040670 75040700
Single lever basin mixer 250 for washbowls without waste set	75042000 75042670 75042700
Single lever basin mixer for concealed installation wall-mounted with spout 19,2 cm	75050000 75050670 75050700
Single lever bidet mixer with pop-up waste set	75200000 75200670 75200700
Single lever basin mixer with bidette hand shower and shower hose 160 cm	75210000
Bath spout	75410000 75410670 75410700
Single lever bath mixer for concealed installation for iBox universal	75415000 75415670 75415700
Single lever bath mixer for concealed installation with integrated security combination according to EN1717 for iBox universal	75416000 75416670 75416700
Single lever bath mixer for exposed installation	75420000 75420670 75420700
4-hole rim mounted bath mixer with sBox	75444000 75444670 75444700
Single lever bath mixer floor-standing	75445000 75445670 75445700
Single lever shower mixer for concealed installation for iBox universal	75615000 75615670 75615700
Single lever shower mixer for exposed installation	75620000 75620670 75620700

Talis

Talis E

	Code no.
Self-closing basin mixer with temperature control	71718000
Self-closing pillar tap for cold water or pre-adjusted water	71719000
Service tool for thermal disinfection	93913000

Logis

	Code no.
Single lever bidet mixer 110 Fine with pop-up waste set	71201000
Single lever basin mixer 110 Fine with pop-up waste set	71251000
Single lever basin mixer 110 Fine with push-open waste set	71252000
Single lever basin mixer 110 Fine without waste set	71253000
Single lever basin mixer 110 Fine CoolStart with pop-up waste set	71254000
Single lever basin mixer 110 Fine CoolStart without waste set	71255000
Single lever basin mixer for concealed installation Fine wall-mounted with spout 20,5 cm	71256000
Single lever basin mixer 240 Fine with pop-up waste set	71257000
Single lever basin mixer 240 Fine without waste set	71258000

Vernis

Vernis Blend

	Code no.
Single lever bidet mixer with pop-up waste set	71210000 71210670
Bidet set with vertical spray	71214000
Single lever basin mixer 100 with bidette hand shower and shower hose 160 cm	71215000
Bath spout	71420000 71420670
Single lever bath mixer for exposed installation	71440000 71440670
2-hole rim mounted bath mixer	71442000 71442670
Single lever bath mixer Monotrou	71443000
Single lever bath and shower mixer Monotrou	71444000
Single lever bath and shower mixer Monotrou with 2 flow rates	71446000
Single lever bath mixer for exposed installation projects pack (6 pcs.)	71447000
Single lever bath mixer for concealed installation	71449000 71449670
Single lever bath mixer for exposed installation with 2 flow rates	71454000
4-hole rim mounted bath mixer	71456000 71456670
2-hole rim mounted bath mixer with diverter valve and hand shower Vario	71461000 71461670
Single lever bath mixer for concealed installation for iBox universal	71466000 71466670
Single lever bath mixer for concealed installation with integrated security combination according to EN1717 for iBox universal	71467000 71467670
Electronic basin mixer with temperature pre-adjustment mains connection 230 V	71501000
Electronic basin mixer with temperature pre-adjustment battery operation	71502000
Electronic basin mixer for cold water or pre-adjusted water battery operation	71503000

Vernis

Vernis Blend

	Code no.
Electronic basin mixer for cold water or pre-adjusted water mains connection 230 V	71504000
Single lever basin mixer 70 with pop-up waste set	71550000 71550670
Single lever basin mixer 100 with pop-up waste set	71551000 71551670
Single lever basin mixer 190 with pop-up waste set	71552000 71552670
3-hole basin mixer with pop-up waste set	71553000 71553670
Single lever basin mixer with swivel spout and pop-up waste set	71554000
Single lever basin mixer 70 with metal pop-up waste set	71557000
Single lever basin mixer 70 without waste set	71558000 71558670
Single lever basin mixer 100 with metal pop-up waste set	71559000
Single lever basin mixer 70 with isolated water conduction and pop-up waste set	71570000
Single lever basin mixer 100 with isolated water conduction and pop-up waste set	71571000
Single lever basin mixer 190 with isolated water conduction and pop-up waste set	71572000
Single lever basin mixer for concealed installation wall-mounted with spout 20,7 cm	71576000 71576670
Single lever basin mixer 100 without waste set	71580000 71580670
Single lever basin mixer 190 with metal pop-up waste set	71581000
Single lever basin mixer 190 without waste set	71582000 71582670
Pillar tap 70 for cold water without waste set	71583000 71583670
Single lever basin mixer 70 CoolStart with pop-up waste set	71584000 71584670
Single lever basin mixer 100 CoolStart with pop-up waste set	71585000 71585670
Single lever basin mixer 70 with pop-up waste set project pack (6 pcs.)	71587000
Single lever basin mixer 100 with pop-up waste set project pack (6 pcs.)	71588000
Single lever shower mixer for exposed installation	71640000 71640670
Single lever shower mixer for exposed installation with 2 flow rates	71646000
Single lever shower mixer for exposed installation projects pack (6 pcs.)	71647000
Single lever shower mixer for concealed installation	71649000 71649670
Single lever shower mixer for concealed installation for iBox universal	71667000 71667670

Vernis Shape

	Code no.
Single lever bidet mixer with pop-up waste set	71211000 71211670
Single lever basin mixer 100 with bidette hand shower and shower hose 160 cm	71216000
Single lever bath mixer for exposed installation	71450000 71450670
2-hole rim mounted bath mixer	71452000 71452670
Single lever bath mixer for exposed installation with 2 flow rates	71453000
Single lever bath mixer for exposed installation project pack (6 pcs.)	71457000
Single lever bath mixer for concealed installation	71458000 71458670
4-hole rim mounted bath mixer	71459000 71459670
Bath spout	71460000 71460670
2-hole rim mounted bath mixer with diverter valve and Vernis Blend hand shower Vario	71462000 71462670
Single lever bath and shower mixer Monotrou	71463000
Single lever bath and shower mixer Monotrou with 2 flow rates	71464000
Single lever bath mixer for concealed installation for iBox universal	71468000 71468670
Single lever bath mixer for concealed installation with integrated security combination according to EN1717 for iBox universal	71469000 71469670
Single lever basin mixer 70 with pop-up waste set	71560000 71560670
Single lever basin mixer 100 with pop-up waste set	71561000 71561670
Single lever basin mixer 190 with pop-up waste set	71562000 71562670
3-hole basin mixer with pop-up waste set	71563000 71563670
Single lever basin mixer with swivel spout and pop-up waste set	71564000
Single lever basin mixer 70 with metal pop-up waste set	71566000
Single lever basin mixer 70 without waste set	71567000 71567670
Single lever basin mixer 100 with metal pop-up waste set	71568000
Single lever basin mixer 100 without waste set	71569000 71569670
Single lever basin mixer for concealed installation wall-mounted with spout 20,7 cm	71578000 71578670
Single lever basin mixer 190 with metal pop-up waste set	71590000
Single lever basin mixer 190 without waste set	71591000 71591670
Pillar tap 70 for cold water without waste set	71592000 71592670
Single lever basin mixer 70 CoolStart with pop-up waste set	71593000 71593670
Single lever basin mixer 100 CoolStart with pop-up waste set	71594000 71594670

	Code no.

Vernis

Vernis Shape

Single lever basin mixer 70 with pop-up waste set project pack (6 pcs.)	71596000
Single lever basin mixer 100 with pop-up waste set project pack (6 pcs.)	71597000
Single lever shower mixer for exposed installation	71650000 71650670
Single lever shower mixer for exposed installation with 2 flow rates	71656000
Single lever shower mixer for exposed installation project pack (6 pcs.)	71657000
Single lever shower mixer for concealed installation	71658000 71658670
Single lever shower mixer for concealed installation for iBox universal	71668000 71668670

Accessories

XtraStoris Original

Wall niche with frame 300/150/100	56057670 56057700 56057800
Wall niche with frame 300/300/100	56061670 56061700 56061800
Wall niche with frame 300/600/100	56064670 56064700 56064800
Wall niche with frame 300/900/100	56067670 56067700 56067800

XtraStoris Minimalistic

Wall niche frameless 300/150/100	56070670 56070700 56070800
Wall niche frameless 300/300/100	56073670 56073700 56073800
Wall niche frameless 300/150/140	56076670 56076700 56076800
Wall niche frameless 300/300/140	56079670 56079700 56079800

XtraStoris Rock

Wall niche with tileable door 300/150/100	56082670 56082700 56082800
Wall niche with tileable door 300/300/100	56085670 56085700 56085800
Wall niche with tileable door 300/150/140	56088670 56088700 56088800
Wall niche with tileable door 300/300/140	56091670 56091700 56091800

	Code no.

XtraStoris Individual

Wall niche Brushed Stainless Steel with design frame 300/150/100	56094140 56094340 56094670 56094700 56094800 56094990
Wall niche Matt Black with design frame 300/150/100	56095140 56095340 56095670 56095700 56095800 56095990
Wall niche Matt White with design frame 300/150/100	56096140 56096340 56096670 56096700 56096800 56096990
Wall niche Brushed Stainless Steel with design frame 300/300/100	56097140 56097340 56097670 56097700 56097800 56097990
Wall niche Matt Black with design frame 300/300/100	56098140 56098340 56098670 56098700 56098800 56098990
Wall niche Matt White with design frame 300/300/100	56099140 56099340 56099670 56099700 56099800 56099990

XtraStoris Safe

Wall niche with tileable door and integrated shut-off valve 150/300/100	56100800

AddStoris

Corner basket	41741000 41741140 41741340 41741670 41741700 41741990
Towel hook	41742000 41742140 41742340 41742670 41742700 41742990
Double bath towel rail	41743000 41743140 41743340 41743670 41743700 41743990
Grab bar	41744000 41744140 41744340 41744670 41744700 41744990

Accessories

AddStoris

	Code no.
Liquid soap dispenser	41745000 41745140 41745340 41745670 41745700 41745990
Soap dish	41746000 41746140 41746340 41746670 41746700 41746990
Bath towel rail	41747000 41747140 41747340 41747670 41747700 41747990
Double roll holder	41748000 41748140 41748340 41748670 41748700 41748990
Toothbrush tumbler	41749000 41749140 41749340 41749670 41749700 41749990
Towel rack with towel holder	41751000 41751140 41751340 41751670 41751700 41751990
Toilet brush holder wall-mounted	41752000 41752140 41752340 41752670 41752700 41752990
Roll holder with cover	41753000 41753140 41753340 41753670 41753700 41753990
Towel ring	41754000 41754140 41754340 41754670 41754700 41754990
Towel hook double	41755000 41755140 41755340 41755670 41755700 41755990
Spare roll holder	41756000 41756140 41756340 41756670 41756700 41756990
Shower door handle	41759000 41759140 41759340 41759670 41759700 41759990
Towel holder twin-handle	41770000 41770140 41770340 41770670 41770700 41770990
Roll holder without cover	41771000 41771140 41771340 41771670 41771700 41771990
Roll holder with shelf	41772000 41772140 41772340 41772670 41772700 41772990
Sanitary bag dispenser	41773000 41773140 41773340 41773670 41773700 41773990
Tissue box	41774000 41774140 41774340 41774670 41774700 41774990
Pedal Bin	41775000 41775670 41775700
Shaving mirror with LED light	41790000 41790140 41790340 41790670 41790700 41790990
Shaving mirror	41791000 41791140 41791340 41791670 41791700 41791990

WallStoris

Bundle hand shower 105 3jet EcoSmart Activation, thermostat, shower bar 70 cm and storage set	24250670 24250700
Bundle hand shower 105 3jet Activation EcoSmart, shower bar 70 cm and storage set	24291670 24291700
Wall bar 50 cm	27902670 27902700
Wall bar 70 cm	27904670 27904700
Storage basket deep	27912670 27912700
Storage basket	27913670 27913700
Towel hook wide	27914670 27914700

Accessories

WallStoris

	Code no.
Shelf	27915670 27915700
Squeegee	27916670 27916700
Push slider	27917670 27917700
Tumbler	27921670 27921700
Cover for storage basket	27925670 27925700
Towel rail	27926670 27926700
Toilet brush holder	27927670 27927700
Toilet paper holder with shelf	27928670 27928700
Towel hook slim	27929670 27929700
Bathtub bundle	27966670 27966700
Shower bundle	27967670 27967700
Bathroom bundle	27968670 27968700
Toilet bundle	27969670 27969700
Mounting set (3 screws, 3 plugs)	94268000

Wastes and overflow

uBox universal

	Code no.
Base set for finish sets for flat installation	01000180
Base set for finish sets for standard installation	01001180
Base set for finish sets for vertical installation	01002180
Complete set for flat installation - 600 for shower drains finish sets	56016180
Complete set for flat installation - 700 for shower drains finish sets	56017180
Complete set for flat installation - 800 for shower drains finish sets	56018180
Complete set for flat installation - 900 for shower drains finish sets	56019180
Complete set for flat installation - 1000 for shower drains finish sets	56020180
Complete set for flat installation - 1200 for shower drains finish sets	56021180
Complete set for standard installation - 600 for shower drains finish sets	56022180
Complete set for standard installation - 700 for shower drains finish sets	56023180
Complete set for standard installation - 800 for shower drains finish sets	56024180
Complete set for standard installation - 900 for shower drains finish sets	56025180
Complete set for standard installation - 1000 for shower drains finish sets	56026180
Complete set for standard installation - 1200 for shower drains finish sets	56027180

RainDrain

	Code no.
Installation set 600 for shower drains finish sets	56010180
Installation set 700 for shower drains finish sets	56011180
Installation set 800 for shower drains finish sets	56012180
Installation set 900 for shower drains finish sets	56013180
Installation set 1000 for shower drains finish sets	56014180
Installation set 1200 for shower drains finish sets	56015180

RainDrain Flex

	Code no.
Finish set shower drain 700 cuttable	56043000 56043140 56043340 56043670 56043700 56043800 56043990
Finish set shower drain 800 cuttable	56044000 56044140 56044340 56044670 56044700 56044800 56044990
Finish set shower drain 900 cuttable	56045000 56045140 56045340 56045670 56045700 56045800 56045990
Finish set shower drain 1000 cuttable	56046000 56046140 56046340 56046670 56046700 56046800 56046990
Finish set shower drain 1200 cuttable	56047000 56047140 56047340 56047670 56047700 56047800 56047990
Finish set shower drain 700 cuttable for wall mounting	56050000 56050140 56050340 56050670 56050700 56050800 56050990
Finish set shower drain 800 cuttable for wall mounting	56051000 56051140 56051340 56051670 56051700 56051800 56051990

Wastes and overflow

RainDrain Flex

	Code no.
Finish set shower drain 900 cuttable for wall mounting	56052000 56052140 56052340 56052670 56052700 56052800 56052990
Finish set shower drain 1000 cuttable for wall mounting	56053000 56053140 56053340 56053670 56053700 56053800 56053990
Finish set shower drain 1200 cuttable for wall mounting	56054000 56054140 56054340 56054670 56054700 56054800 56054990

RainDrain Match

	Code no.
Finish set shower drain 600 with height adjustable frame	56036000 56036450 56036610 56036670 56036700 56036800
Finish set shower drain 700 with height adjustable frame	56037000 56037450 56037610 56037670 56037700 56037800
Finish set shower drain 800 with height adjustable frame	56038000 56038450 56038610 56038670 56038700 56038800
Finish set shower drain 900 with height adjustable frame	56040000 56040450 56040610 56040670 56040700 56040800
Finish set shower drain 1000 with height adjustable frame	56041000 56041450 56041610 56041670 56041700 56041800
Finish set shower drain 1200 with height adjustable frame	56042000 56042450 56042610 56042670 56042700 56042800

RainDrain Rock

	Code no.
Finish set shower drain 600 cut on size and tileable	56029000
Finish set shower drain 700 cut on size and tileable	56030000
Finish set shower drain 800 cut on size and tileable	56031000
Finish set shower drain 900 cut on size and tileable	56032000
Finish set shower drain 1000 cut on size and tileable	56033000
Finish set shower drain 1200 cut on size and tileable	56034000

RainDrain Spot

	Code no.
Complete set 150/150 point drain and installation set	56055800
Height compensation supplementary piece	56056000
Complete set 150/150 point drain tileable rear cover and installation set	56112800

Bath filler with wastes and overflow for bath tubs

	Code no.
Finish set oval	28020140 28020340 28020670 28020700 28020990

Accessories

	Code no.
Straight pipe 30 cm	53428670 53428700

Kitchen mixers and sinks

Aqittura M91

	Code no.
FilterSystem 210, pull-out spout, 1jet, sBox, starter set	76800000 76800670 76800800
FilterSystem 210, pull-out spout, 1jet, starter set	76801000 76801670 76801800
FilterSystem 240, 1jet, starter set	76802000 76802670 76802800
FilterSystem 210, pull-out spout, 1jet	76803000 76803670 76803800
FilterSystem 240, 1jet	76804000 76804670 76804800
Filter active carbon	76814000
Filter ion exchanger and active carbon	76815000
F23 Flowmeter	76818000
FilterSystem 210, pull-out spout, 1jet, sBox	76826000 76826670 76826800
Filter ion exchanger Pro and active carbon	76827000
Mineralisation and filter Harmony	76828000
Mineralisation and filter Life	76829000
Mineralisation and filter Sport	76830000

Zesis M33

	Code no.
Single lever kitchen mixer 150, pull-out spray, 2jet	74800000 74800670 74800800
Single lever kitchen mixer 160, pull-out spray, 2jet	74801000 74801670 74801800
Single lever kitchen mixer 150, 1jet	74802000 74802670 74802800

	Code no.

Kitchen mixers and sinks

Zesis M33

Single lever kitchen mixer 150, pull-out spray, 2jet, sBox lite	74803000 74803670 74803800
Single lever kitchen mixer, 160, pull-out spray, 2jet, sBox lite	74804000 74804670 74804800
Single lever kitchen mixer 160, installation in front of a window, 1jet	74805000
Single lever kitchen mixer 150, LowPressure/ vented hot water cylinders, 1jet	74806000
Single lever kitchen mixer 200, device shut-off valve, CoolStart, 1jet	74807000
Single lever kitchen mixer 200, device shut-off valve, 1jet	74808000
Single lever kitchen mixer 150, Eco, pull-out spray, 2jet	74810000
Single lever kitchen mixer 150, Eco, 1jet	74811000
Single lever kitchen mixer 150, CoolStart, EcoSmart, 1jet	74813000

Vernis M35

Single lever kitchen mixer 210 with swivel spout	71870000 71870670
Single lever kitchen mixer 210 with swivel spout	71871000 71871670

Index Price brackets for Spare Parts
effective from 01.01.2022

Price bracket	finish (Euro*)	Price bracket	finish (Euro*)
1	2.50	51	3.80
2	4.10	52	6.20
3	6.60	53	9.90
4	8.90	54	13.40
5	10.90	55	16.40
6	14.40	56	21.60
7	17.60	57	26.40
8	22.10	58	33.20
9	28.20	59	42.30
10	35.00	60	52.50
11	44.90	61	67.40
12	55.40	62	83.10
13	67.70	63	101.60
14	78.90	64	118.40
15	98.10	65	147.20
16	127.30	66	191.00
17	160.20	67	240.30
18	196.30	68	294.50
19	259.10	69	388.70
20	315.10	70	472.70
21	423.70	71	635.60
22	598.90	72	898.40
23	857.60	73	1,286.40
24	1,695.80	74	2,543.70
98	Price find at this price book		
99	Price on request		

* Gross prices per piece, VAT not included.
Recommended retail prices.

Packaging units

Please consider the packaging units when placing your order.

code no.	Number Of Items Per PackingUnit
01	
01000180	8
01001180	8
01002180	8
01800180	10
01850180	10
06	
06010000	2500
10	
10452180	6
10823000	30
10823800	30
13	
13111000	4
13111400	3
13114000	7
13114140	7
13114340	7
13114670	7
13114700	7
13114990	7
13115000	7
13116000	10
13116140	8
13116340	8
13116670	8
13116700	8
13116990	8
13117000	7
13122000	10
13123000	7
13132000	20
13141000	5
13141400	5
13151000	4
13151400	4
13159180	10
13161000	4
13161400	4
13171000	4
13171400	4
13182000	136
13201000	7
13211000	10
13233180	5
13244180	8
13414000	35
13423000	20
13424000	15
13437180	2
13439180	8
13444180	2
13593000	15
13595000	50
13597000	24
13601000	20
13604000	20
13620180	24
13622180	25
13901000	100
13902000	100
13903000	100
13912000	750
13913000	750
13950000	40
13950140	36
13950340	36
13950670	36
13950700	36
13950990	36
13952000	50
13954000	50
13954820	36
13961000	200
13964000	100
14	
14095000	56
14096000	56
14420000	28
14495000	28
14806000	3
14820000	4
14820800	4
14821000	4
14821800	4
14822000	4
14822800	4
14823000	4
14834000	4
14834800	4
14847000	4
14847800	4
14857000	4
14857800	4
14883000	4
14883800	4
14884000	4
14884800	4
14888000	4
14893000	36
14920000	20
15	
15310180	3
15311180	3
15346000	31
15355000	2
15355400	2
15356000	2
15356400	2
15357000	2
15357400	2
15358000	2
15358400	2
15380000	4
15380670	2
15380700	4
15381000	2
15381700	2
15382000	2
15382670	2
15382700	2
15384000	2
15384700	2
15597000	17
15705000	12
15706000	9
15707000	9
15708000	10
15712000	10
15714000	10
15714140	10
15714340	10
15714670	10
15714700	10
15714990	10
15734400	12
15735400	6
15736400	12
15737400	12
15738400	10
15741000	10
15742000	10
15743000	10
15743140	10
15743340	10
15743670	10
15743700	10
15743990	10
15744000	10
15745000	10
15747000	10
15748000	10
15755000	6
15756000	9
15757000	10
15758000	10
15758140	10
15758340	10
15758670	10
15758700	10
15758990	10
15760000	10
15761000	10
15762000	10
15763000	10
15763140	6
15763670	6
15763700	6
15764000	10
15765000	6
15767000	10
15768000	10
15773000	8
15774000	7
15930180	25
15932000	25
15970180	25
15972000	40
15973180	50
15974180	50
15981180	20
16	
16884000	100
16884820	80
19	
19418000	2
21	
21140700	64
21141000	64
21142000	64
21143000	64
21144000	64
21145000	64
21146000	64
24	
24010180	6
24100000	30
24100670	30
24100700	30
24101000	30
24101670	30
24101700	30
24110000	30
24110670	30
24110700	30
24111000	30
24111670	30
24111700	30
24120000	30
24120670	30
24120700	30
24121000	30
24121670	30
24121700	30
24130000	12
24130670	12
24130700	12
24132000	12
24132670	12
24132700	12
24139000	10
24140000	4
24150000	4
24160000	12
24160670	12
24160700	12
24161000	12
24161670	12
24161700	12
24170000	6
24170670	6
24170700	6
24171000	6
24171670	6
24171700	6

code no.	Number Of Items Per PackingUnit
24270000	2
24291670	2
24291700	2
24301000	20
24301670	20
24301700	20
24302000	20
24302670	20
24302700	20
24303000	20
24303670	20
24303700	20
24340000	2
24340670	2
24340700	2
24360000	2
24360670	2
24360700	2
24400000	12
24401000	11
26	
26014000	22
26014140	20
26014340	20
26014670	20
26014700	20
26014990	20
26079000	2
26089000	2
26089670	2
26090000	24
26093000	8
26097000	2
26097670	2
26098000	2
26099000	2
26099670	2
26220000	6
26220140	6
26220340	6
26220670	6
26220700	6
26220990	6
26221000	6
26221140	6
26221340	6
26221670	6
26221700	6
26221990	6
26228000	6
26228700	6
26229000	6
26229700	6
26231000	2
26231340	2
26231700	2
26238000	3
26238140	3
26238340	3
26238670	3
26238700	3
26238990	3
26239000	3
26243000	8
26243700	8
26250000	3
26250140	3
26250340	3
26250670	3
26250700	3
26250990	3
26251000	3
26252000	3
26253000	3
26254180	6
26257000	4
26258000	4
26270000	34
26270670	34
26271000	8
26271670	8
26272000	2
26273000	8
26274000	2
26275000	12
26276000	2
26276670	2
26277000	6
26277670	6
26278000	8
26279000	12
26281000	8
26281670	8
26282000	2
26282670	2
26283000	6
26283670	6
26284000	2
26286000	2
26286670	2
26289000	2
26289670	2
26318000	2
26319000	2
26320000	10
26322000	3
26322400	3
26323000	5
26326000	2
26328400	9
26329000	15
26330400	24
26331400	24
26332400	24
26333400	24
26334400	24
26336400	24
26340000	34
26340670	34
26401000	10
26402000	5
26403400	2
26404400	2
26405000	70
26405670	70
26406000	140
26406670	140
26407000	60
26407670	60
26410400	20
26411400	20
26412400	20
26413400	20
26420400	20
26421400	20
26422670	14
26423670	12
26424400	20
26425400	20
26442000	10
26443000	10
26453000	110
26453670	110
26455000	110
26455140	110
26455340	110
26455670	110
26455700	110
26455990	110
26456000	10
26456400	10
26457000	168
26457140	168
26464000	10
26465000	7
26466000	6
26466400	6
26467000	6
26467400	6
26469000	6
26470000	6
26470400	6
26471180	10
26472000	6
26481000	6
26485000	40
26486000	25
26487000	25
26503000	16
26504000	8
26505000	12
26506000	6
26511000	24
26511400	24
26511600	24
26519000	38
26520000	25
26520140	20
26520340	20
26520400	25
26520670	20
26520700	20
26520990	20
26521000	25
26521400	24
26522000	10
26522400	7
26523000	7
26524000	10
26524400	10
26528000	10
26528400	10
26530000	20
26530140	20
26530340	20
26530400	20
26530670	20
26530700	20
26530990	20
26531000	25
26531140	20
26531340	20
26531400	25
26531670	20
26531700	20
26531990	20
26532400	12
26533400	12
26534400	12
26535400	12
26536400	7
26537400	4
26538400	4
26539400	6
26550000	28
26550400	28
26551000	30
26551400	28
26553400	12
26554400	12
26555400	16
26560400	12
26561400	12
26562400	12
26563400	12
26564400	12
26565400	12
26566400	12
26567400	20
26568400	20
26569400	20
26570400	7
26571400	7
26572400	7
26573400	7

Packaging units

Please consider the packaging units when placing your order.

code no.	Number Of Items Per PackingUnit
26574400	7
26575400	4
26580400	12
26581400	12
26582400	12
26583400	10
26584400	12
26585400	12
26586400	12
26590400	7
26591400	7
26592400	6
26593400	7
26594400	7
26595400	7
26600000	3
26601000	6
26604000	4
26605000	4
26620000	16
26620400	12
26621000	7
26621400	7
26622000	12
26622400	12
26623000	6
26623400	6
26626000	6
26626400	6
26630000	12
26630400	16
26631000	7
26631400	5
26632000	12
26633000	6
26640540	12
26640560	12
26640670	12
26640700	12
26690400	20
26691400	20
26692400	20
26693400	15
26694400	14
26700000	20
26701000	20
26720000	20

code no.	Number Of Items Per PackingUnit
26720400	20
26721000	20
26721400	10
26722000	10
26723000	10
26724000	10
26725000	10
26726000	10
26727000	10
26790000	2
26791000	2
26793000	2
26794000	2
26800400	24
26801400	24
26802400	24
26803400	24
26804400	24
26805400	34
26806400	34
26810400	32
26811400	34
26812400	32
26813400	32
26814400	32
26815400	34
26816400	34
26840180	8
26843000	8
26843700	8
26844000	8
26844700	8
26852000	12
26852700	12
26857000	12
26857700	12
26858000	8
26858700	8
26864000	26
26864700	26
26865000	20
26865700	16
26866000	30
26866340	30
26866670	48
26866700	30
26866990	30

code no.	Number Of Items Per PackingUnit
26867000	30
26867700	30
27	
27013400	7
27014400	5
27032000	6
27033000	3
27034000	7
27035000	3
27038000	2
27081400	7
27082400	5
27085000	4
27086000	8
27114000	2
27115000	2
27116000	2
27129000	2
27129400	2
27133000	2
27133400	2
27185000	2
27188000	2
27222000	2
27224000	2
27254400	2
27256400	2
27258400	2
27267000	2
27268000	2
27269000	2
27270000	2
27271000	2
27281000	2
27284000	2
27289000	2
27337000	6
27337400	6
27355000	10
27356000	10
27370000	4
27371000	4
27375000	4
27376000	4
27378000	6
27378400	6
27380000	4

code no.	Number Of Items Per PackingUnit
27381000	4
27388000	7
27389000	7
27389140	7
27389340	7
27389670	7
27389700	7
27389990	7
27393000	24
27393140	24
27393670	24
27393700	24
27405000	7
27405090	7
27409000	20
27411000	48
27412000	15
27413000	21
27413140	21
27413340	21
27413670	21
27413700	21
27413990	21
27414000	150
27424000	5
27424090	7
27438000	36
27441000	26
27443000	26
27446000	20
27452000	20
27453000	100
27454000	100
27454140	100
27454340	100
27454670	100
27454700	100
27454990	100
27456000	98
27458000	100
27461000	6
27463000	7
27467000	24
27474000	6
27477000	7
27478000	7
27479000	36

code no.	Number Of Items Per PackingUnit
27492000	2
27493000	6
27494000	6
27505000	150
27506000	100
27521000	100
27558000	20
27559000	20
27574000	20
27575000	20
27576000	20
27577000	20
27592000	20
27593000	20
27594000	20
27595000	20
27607000	6
27609000	10
27610000	10
27611000	20
27614000	10
27615000	20
27617000	12
27617820	12
27620000	7
27623000	7
27636000	5
27640000	3
27640400	3
27645000	2
27646000	2
27648000	3
27648400	3
27649000	3
27652000	12
27653000	7
27654000	12
27660000	2
27667000	7
27668000	10
27669000	11
27671000	4
27672000	2
27673000	2
27674000	2
27704000	14
27717000	10

code no.	Number Of Items Per PackingUnit
27724000	7
27728000	10
27729000	7
27762000	7
27763000	10
27764000	12
27766000	7
27767000	10
27771000	7
27772000	10
27774000	7
27776000	12
27802000	10
27803000	5
27803400	5
27804000	70
27804670	70
27805000	40
27805670	60
27809000	60
27809670	60
27812400	7
27813400	3
27833400	3
27856000	10
27857000	5
27902670	25
27902700	25
27904670	30
27904700	30
27912670	24
27912700	24
27913670	40
27913700	40
27914670	216
27914700	216
27915670	24
27915700	24
27916670	170
27916700	170
27917670	120
27917700	120
27921670	12
27921700	12
27925670	112
27925700	112
27926670	30

code no.	Number Of Items Per PackingUnit
27926700	30
27927670	10
27927700	10
27928670	28
27928700	28
27929670	216
27929700	216
27966670	2
27966700	2
27967670	8
27967700	8
27968670	4
27968700	4
27969670	4
27969700	4
28	
28010000	5
28010670	6
28010700	5
28020000	5
28020670	5
28020700	5
28072000	400
28132000	25
28134000	25
28136000	25
28167000	25
28168000	25
28169000	25
28248000	25
28249000	25
28262000	50
28264000	50
28266000	50
28272000	25
28272140	25
28272340	25
28272450	25
28272670	25
28272700	25
28272990	25
28274000	25
28276000	25
28276140	25
28276340	25
28276450	25
28276670	25

code no.	Number Of Items Per PackingUnit
28276700	25
28276800	25
28276990	25
28307000	20
28321000	200
28324000	100
28328000	72
28331000	100
28331140	105
28331340	105
28331670	105
28331700	105
28331800	105
28331990	105
28335000	54
28346000	180
28387000	60
28387140	105
28387340	105
28387670	105
28387700	105
28387990	105
28389000	2
28423000	50
28424000	32
28425000	25
28462000	26
28466000	48
28467000	80
28496000	18
28535000	20
28536000	20
28537000	24
28538000	24
28539000	16
28548000	12
28548090	15
28561000	30
28562000	30
28563000	30
28580000	24
28583000	24
28585000	35
28587000	20
28587400	20
28588000	20
28588400	20

code no.	Number Of Items Per PackingUnit
28631000	10
28631140	10
28631340	10
28631670	10
28631700	10
28631990	10
28632000	20
28632140	20
28632340	20
28632670	20
28632700	20
28632990	20
28650000	170
28662000	10
28663000	12
28672000	20
28675000	60
28678000	40
28679000	60
28684000	50
28694000	100
28698000	6
28760210	24
28787640	24
28788570	24
31	
31016000	10
31022000	4
31023000	4
31060000	10
31068000	10
31080000	10
31081000	6
31082000	4
31084000	10
31085000	6
31086000	6
31087000	5
31088000	10
31100000	4
31101000	4
31102000	4
31103000	4
31121000	10
31130000	10
31159000	6
31160000	10

code no.	Number Of Items Per PackingUnit
31161000	5
31162000	6
31163000	6
31166000	10
31171000	4
31172000	4
31173000	4
31174000	8
31183000	5
31184000	4
31185000	5
31186000	10
31187000	6
31190000	6
31203000	11
31204000	11
31261000	10
31280000	10
31285000	6
31422000	4
31423000	4
31442000	6
31443000	9
31446000	6
31451000	12
31454000	12
31456000	12
31460000	8
31465000	10
31466000	10
31480000	8
31493000	10
31494000	20
31509000	10
31513000	10
31517000	10
31518000	5
31519000	6
31521000	4
31523000	4
31531000	5
31532000	5
31539000	10
31603000	10
31604000	10
31607000	10
31608000	5

Packaging units

Please consider the packaging units when placing your order.

code no.	Number Of Items Per PackingUnit
31609000	6
31621000	10
31657000	10
31658000	4
31660000	8
31665000	10
31677000	40
31680000	8
31685000	9
31686000	15
31730000	10
31732000	10
31733000	10
31741180	20
31803000	6
31804000	10
31806000	10
31806800	10
31815000	4
31815670	4
31815800	4
31816000	10
31817000	10
31817670	4
31817800	10
31820000	10
31820670	10
31820800	10
31822000	10
31823000	4
31825000	8
31910000	8
31911000	8
31913000	6
31914000	8
31915000	8
31916000	2
31917000	8
31920000	10
31922000	10
31923000	6
31926000	10
31927000	6
31928000	10
31930000	10
31931000	10
31937000	4

code no.	Number Of Items Per PackingUnit
31938000	8
31940000	8
31945000	10
31946000	10
31947000	25
31948000	8
31952000	7
31960000	8
31961000	20
31965000	10
31967000	25
31968000	8
31971000	50
32	
32020000	10
32031000	10
32032000	10
32070000	6
32122000	15
32127000	20
32128000	20
32129000	20
32420000	8
32475000	10
32477000	10
32500000	6
32500140	6
32500340	6
32500670	6
32500700	6
32500990	6
32501000	5
32502000	5
32503000	5
32506000	5
32507000	5
32507140	5
32507340	5
32507670	5
32507700	5
32507990	5
32508000	5
32511000	6
32511140	6
32511340	6
32511670	6
32511700	6

code no.	Number Of Items Per PackingUnit
32511990	6
32512000	7
32512140	7
32512340	7
32512670	4
32512700	4
32512990	4
32514000	4
32515000	9
32515340	9
32515670	9
32515700	9
32515990	9
32520000	5
32520140	7
32520990	7
32522000	4
32525000	6
32526000	9
32526700	7
32540000	6
32540670	8
32540990	10
32542000	20
32543000	5
32543140	7
32543340	7
32543670	7
32543700	7
32543990	7
32545000	6
32545140	10
32545670	10
32545700	10
32545990	10
32546000	6
32548000	30
32550000	6
32551000	6
32552000	6
32553000	6
32560000	6
32560670	10
32560700	10
32565000	6
32565140	10
32565670	10

code no.	Number Of Items Per PackingUnit
32565700	10
32565990	10
32570000	5
32571000	5
32572000	4
32620000	8
32675000	10
32841000	10
32851000	10
40	
40068000	48
40088000	48
40089000	22
40418000	15
40418800	15
40438000	15
40438340	15
40438670	15
40438800	15
40448000	15
40448670	15
40448800	15
40468000	15
40468670	15
40468800	15
40511000	125
40511820	80
40512000	15
40512820	6
40513000	20
40513820	6
40514000	12
40514820	12
40515000	18
40515820	6
40516000	18
40516820	20
40517000	30
40517820	36
40518000	18
40518820	6
40522000	10
40522820	10
40523000	32
40523820	10
40526000	30
40526820	10

code no.	Number Of Items Per PackingUnit
40952800	90
41	
41710000	30
41711000	200
41712000	18
41713000	30
41714000	30
41715000	30
41716000	25
41717000	24
41718000	40
41720000	4
41722000	6
41723000	30
41724000	9
41725000	75
41726000	75
41727000	3
41728000	2
41741000	12
41741140	12
41741340	12
41741670	12
41741700	12
41741990	12
41742000	72
41742140	72
41742340	72
41742670	72
41742700	72
41742990	72
41743000	12
41743140	6
41743340	6
41743670	6
41743700	6
41743990	6
41744000	18
41744140	18
41744340	18
41744670	18
41744700	18
41744990	18
41745000	20
41745140	20
41745340	20
41745670	19

code no.	Number Of Items Per PackingUnit
41745700	20
41745990	20
41746000	15
41746140	15
41746340	15
41746670	15
41746700	15
41746990	15
41747000	10
41747140	12
41747340	12
41747670	12
41747700	12
41747990	12
41748000	18
41748140	18
41748340	18
41748670	18
41748700	18
41748990	18
41749000	15
41749140	15
41749340	15
41749670	15
41749700	15
41749990	15
41751000	4
41751140	4
41751340	4
41751670	4
41751700	4
41751990	4
41752000	8
41752140	8
41752340	8
41752670	8
41752700	8
41752990	8
41753000	20
41753140	20
41753340	20
41753670	20
41753700	20
41753990	20
41754000	20
41754140	20
41754340	20

code no.	Number Of Items Per PackingUnit
41754670	20
41754700	20
41754990	20
41755000	144
41755140	144
41755340	144
41755670	144
41755700	144
41755990	144
41756000	30
41756140	30
41756340	30
41756670	30
41756700	30
41756990	30
41759000	15
41759140	15
41759340	15
41759670	15
41759700	15
41759990	15
41770000	18
41770140	18
41770340	18
41770670	18
41770700	18
41770990	18
41771000	30
41771140	30
41771340	30
41771670	30
41771700	30
41771990	30
41772000	30
41772140	30
41772340	30
41772670	30
41772700	30
41772990	30
41773000	30
41773140	30
41773340	30
41773670	30
41773700	30
41773990	30
41774000	12
41774140	12

code no.	Number Of Items Per PackingUnit
41774340	12
41774670	12
41774700	12
41774990	12
41775000	2
41775670	2
41775700	2
41790000	4
41790140	6
41790340	6
41790670	6
41790700	6
41790990	6
41791000	10
41791140	10
41791340	10
41791670	10
41791700	10
41791990	10
43	
43921800	12
43927000	10
43928000	4
43931800	12
43937000	10
43938000	6
50	
50001000	80
50100000	30
50100140	100
50100340	70
50100670	100
50100700	100
50100990	70
50105000	100
50107000	12
52	
52010000	30
52053000	30
52100000	18
52105000	30
52105140	24
52105340	24
52105670	18
52105700	24
52105990	24
52120000	20

code no.	Number Of Items Per PackingUnit
53	
53002000	25
53010000	25
53428000	50
53646000	14
53990000	100
55	
55213000	30
55237000	25
56	
56010180	2
56011180	2
56012180	2
56013180	2
56014180	2
56015180	2
56029000	4
56030000	4
56031000	4
56032000	4
56033000	4
56034000	2
56036000	4
56036450	4
56036610	4
56036670	4
56036700	4
56036800	4
56037000	4
56037450	4
56037610	4
56037670	4
56037700	4
56037800	4
56038000	4
56038450	4
56038610	4
56038670	4
56038700	4
56038800	4
56040000	4
56040450	4
56040610	4
56040670	4
56040700	4
56040800	4
56041800	4

code no.	Number Of Items Per PackingUnit
56042000	2
56042450	2
56042610	2
56042670	2
56042700	2
56042800	2
56043000	4
56043140	4
56043340	4
56043670	4
56043700	4
56043800	4
56043990	4
56044000	4
56044140	4
56044340	4
56044670	4
56044700	4
56044800	4
56044990	4
56045000	4
56045140	4
56045340	4
56045670	4
56045700	4
56045800	4
56045990	4
56047000	2
56047140	2
56047340	2
56047670	2
56047700	2
56047800	2
56047990	2
56050000	4
56050140	4
56050340	4
56050670	4
56050700	4
56050800	4
56050990	4
56051000	4
56051140	4
56051340	4
56051670	4
56051700	4
56051800	4

Packaging units

Please consider the packaging units when placing your order.

code no.	Number Of Items Per PackingUnit
56051990	4
56052000	4
56052140	4
56052340	4
56052670	4
56052700	4
56052800	4
56052990	4
56054000	2
56054140	2
56054340	2
56054670	2
56054700	2
56054800	2
56054990	2
56055800	3
56056000	8
56057670	3
56057700	3
56057800	3
56061670	3
56061700	3
56061800	3
56064670	2
56064700	2
56064800	2
56067670	2
56067700	2
56067800	2
56070670	3
56070700	3
56070800	3
56073670	3
56073700	3
56073800	3
56076670	2
56076700	2
56076800	2
56079670	2
56079700	2
56079800	2
56082670	3
56082700	3
56082800	3
56085670	3
56085700	3
56085800	3

code no.	Number Of Items Per PackingUnit
56088670	2
56088700	2
56088800	2
56091670	2
56091700	3
56091800	2
56094140	3
56094340	3
56094670	3
56094700	3
56094800	3
56094990	3
56095140	3
56095340	3
56095670	3
56095700	3
56095800	3
56095990	3
56096140	3
56096340	3
56096670	3
56096700	3
56096800	3
56096990	3
56097140	3
56097340	3
56097670	3
56097700	3
56097800	3
56097990	3
56098140	3
56098340	3
56098670	3
56098700	3
56098800	3
56098990	3
56099140	3
56099340	3
56099670	3
56099700	3
56099800	3
56099990	3
56100800	3
56112800	7
56373000	36
58	
58112000	12

code no.	Number Of Items Per PackingUnit
58113000	13
58115180	13
58116180	10
58117000	50
58117140	36
58117340	36
58117670	36
58117700	36
58117820	50
58117990	36
58123000	13
58125180	13
58126180	10
58127000	50
58128000	36
58140180	13
58141180	10
58142000	13
58143000	13
58150000	13
58185000	100
58185990	100
58186000	80
58192000	20
60	
60056000	20
60067000	14
71	
71070000	13
71071000	13
71072000	13
71073000	13
71074000	10
71075000	13
71076000	13
71077000	13
71078000	13
71090000	5
71091000	5
71095000	5
71100000	13
71101000	13
71102000	13
71103000	13
71104000	13
71105000	13
71107000	13

code no.	Number Of Items Per PackingUnit
71120000	13
71130000	6
71131000	6
71133000	4
71170000	13
71171000	13
71200000	13
71201000	5
71203000	13
71204000	13
71210000	5
71210670	5
71211000	5
71211670	5
71215000	6
71216000	6
71220000	6
71221000	4
71222000	4
71225000	8
71243000	6
71251000	5
71252000	5
71253000	5
71254000	5
71255000	5
71256000	8
71257000	4
71258000	4
71263000	9
71280000	5
71283000	5
71285000	5
71286000	6
71287000	6
71290000	10
71310000	5
71311000	12
71312000	12
71313000	5
71314000	9
71315000	12
71400000	8
71401000	8
71402000	5
71405000	10
71406000	15

code no.	Number Of Items Per PackingUnit
71407000	10
71409000	12
71410000	20
71420000	50
71420670	50
71430000	8
71440000	8
71440670	8
71442000	4
71442670	3
71444000	10
71447000	2
71449000	10
71449670	10
71450000	8
71450670	10
71452670	3
71456670	4
71458000	10
71458670	10
71459670	4
71460000	50
71460670	50
71461000	4
71463000	14
71466670	7
71474140	10
71474670	10
71474700	10
71474990	10
71501000	9
71502000	9
71503000	9
71504000	9
71550000	5
71550670	5
71551000	5
71551670	5
71552000	5
71552670	5
71553670	6
71554000	4
71557000	6
71558000	15
71558670	6
71559000	6
71560000	6

code no.	Number Of Items Per PackingUnit
71560670	6
71561000	6
71561670	6
71562000	5
71562670	5
71563670	6
71564000	4
71566000	6
71567000	10
71567670	6
71568000	6
71569000	10
71569670	6
71570000	7
71576000	8
71576670	8
71578000	8
71578670	8
71580000	15
71580670	15
71581000	5
71582000	5
71583000	15
71583670	15
71584000	5
71584670	6
71585000	5
71585670	6
71587000	2
71588000	2
71590000	5
71591000	5
71591670	6
71592000	15
71592670	15
71593000	5
71593670	6
71594000	5
71594670	6
71596000	2
71600000	8
71601000	8
71604000	15
71605000	10
71606000	20
71629000	5
71630000	8

code no.	Number Of Items Per PackingUnit
71640000	8
71640670	8
71647000	2
71649000	10
71649670	10
71650000	10
71650670	8
71658000	10
71658670	10
71666000	9
71667670	7
71700000	10
71701000	10
71702000	10
71703000	10
71704000	10
71705000	10
71706000	10
71710000	10
71710140	10
71710340	10
71710670	10
71710700	10
71710990	10
71711000	10
71712000	10
71712140	10
71712340	10
71712670	10
71712700	10
71712990	10
71713000	10
71713140	10
71713340	10
71713670	10
71713700	10
71713990	10
71714000	10
71714140	10
71714340	10
71714670	10
71714700	10
71714990	10
71715000	10
71716000	4
71716140	5
71716340	5

code no.	Number Of Items Per PackingUnit
71716670	5
71716700	5
71716990	5
71717000	5
71717140	5
71717340	5
71717670	5
71717700	5
71717990	5
71718000	6
71719000	6
71720000	10
71721000	10
71729000	7
71731000	5
71732000	6
71733000	4
71733140	4
71733670	4
71734000	6
71734140	6
71734340	6
71734670	6
71734700	6
71734990	6
71740000	8
71740140	6
71740340	6
71740670	6
71740700	6
71740990	6
71745000	10
71745140	9
71745340	9
71745670	10
71745700	10
71745990	10
71747000	5
71748000	6
71748140	3
71748670	5
71750000	10
71751000	10
71752000	5
71753000	10
71754000	6
71755000	5

code no.	Number Of Items Per PackingUnit
71760000	8
71760140	6
71760340	6
71760670	6
71760700	6
71760990	6
71761000	8
71764000	20
71765000	10
71765140	10
71765670	10
71765700	10
71765990	10
71766000	20
71768000	10
71802000	4
71802800	4
71804000	10
71805000	10
71806000	10
71806800	10
71807000	10
71808000	6
71813000	3
71814000	10
71820000	6
71820800	6
71829000	3
71829800	3
71830000	10
71831000	10
71832000	10
71833000	4
71834000	3
71835000	10
71836000	10
71837000	10
71839000	10
71870000	5
71870670	5
71871000	5
71871670	5
71970000	50
72	
72010000	10
72011000	10
72012000	10

code no.	Number Of Items Per PackingUnit
72013000	10
72014000	10
72017000	10
72020000	10
72021000	10
72022000	10
72023000	10
72031000	5
72032000	8
72040000	10
72041000	10
72042000	10
72043000	10
72044000	7
72045000	5
72105000	6
72110000	8
72111000	9
72113000	5
72115000	6
72116000	6
72200000	10
72202000	10
72290000	6
72291000	8
72400000	8
72405000	9
72410000	20
72416000	6
72417000	5
72419000	6
72600000	8
72605000	12
72606000	20
72800000	4
72800670	4
72800800	9
72801000	3
72801670	3
72801800	3
72802000	4
72802670	9
72802800	9
72803000	3
72803670	3
72803800	3
72804000	9

Packaging units

Please consider the packaging units when placing your order.

code no.	Number Of Items Per PackingUnit
72804670	9
72804800	9
72805000	9
72805670	9
72805800	9
72806000	9
72806670	9
72806800	9
72807000	9
72807670	9
72807800	9
72808000	4
72808670	9
72808800	9
72809000	3
72809670	3
72809800	3
72810000	4
72810800	4
72811000	9
72813000	4
72813800	4
72814000	4
72814800	9
72815000	9
72815800	9
72820000	4
72820800	4
72821000	4
72821800	4
72822000	8
72822800	8
72823000	3
72823800	3
72827000	9
72827670	9
72827800	9
72840000	9
72840670	9
72840800	9
72841000	16
72841670	16
72841800	16
72842000	4
72842670	9
72843000	4
72843670	4

code no.	Number Of Items Per PackingUnit
72844000	4
72844670	9
72845000	4
72845670	9
73	
73561000	9
73800000	6
73800800	6
73801000	6
73801800	6
73802000	6
73802800	4
73803000	6
73803800	6
73804000	5
73804800	6
73812000	4
73812800	6
73850000	6
73850800	6
73851000	6
73851800	6
73852000	6
73852800	6
73853000	6
73853800	5
73860000	6
73860800	6
73880000	4
73880800	3
74	
74500000	5
74502000	5
74506000	5
74507000	5
74511000	5
74512000	4
74514000	9
74515000	9
74520000	5
74522000	8
74525000	6
74526000	6
74540000	8
74545000	10
74546000	10
74548000	30

code no.	Number Of Items Per PackingUnit
74550000	6
74551000	6
74552000	6
74553000	6
74560000	8
74565000	10
74800000	4
74800670	4
74801000	4
74802000	4
74802670	4
74807000	3
74808000	3
74810000	4
74811000	4
74813000	4
75	
75010000	5
75010670	5
75010700	5
75012000	5
75012670	5
75012700	5
75013000	5
75013670	5
75013700	5
75020000	5
75020670	5
75020700	5
75022000	5
75022670	5
75022700	5
75023000	5
75023670	5
75023700	5
75024000	5
75024670	5
75024700	5
75030000	2
75030670	2
75030700	2
75032000	2
75032670	2
75032700	2
75040000	4
75040670	4
75040700	4

code no.	Number Of Items Per PackingUnit
75042000	3
75042670	3
75042700	4
75050000	6
75050670	6
75050700	6
75200000	5
75200670	5
75200700	5
75410000	20
75410670	20
75410700	20
75415000	6
75415670	6
75415700	6
75420000	2
75420670	2
75420700	2
75615000	6
75615670	6
75615700	6
75620000	8
75620670	8
75620700	8
76	
76010000	5
76010670	5
76010700	5
76013000	5
76013670	5
76013700	5
76020000	5
76020670	5
76020700	5
76023000	5
76023670	5
76023700	5
76024000	5
76024670	5
76024700	5
76050000	6
76050670	6
76050700	6
76051000	6
76051670	6
76051700	6
76060000	2

code no.	Number Of Items Per PackingUnit
76060670	2
76060700	2
76063000	2
76063670	2
76063700	2
76070000	3
76070670	3
76070700	3
76200000	5
76200670	5
76200700	5
76410000	20
76410670	20
76410700	20
76415000	6
76415670	6
76415700	6
76420000	2
76420670	2
76420700	2
76615000	6
76615670	6
76615700	6
76620000	4
76620670	4
76620700	8
92	
92019000	180
92601000	50
92631000	30
92730000	50
93	
93286000	20
93500000	32
94	
94004000	30
94005000	200
94008000	90
94009000	120
94051000	200
94055000	80
94139000	20
94139140	20
94139340	20
94140000	106
94148000	25
94149000	200

code no.	Number Of Items Per PackingUnit
94246000	800
94282000	50
94850000	200
95	
95048000	25
95052000	30
95053000	100
95239000	100
96	
96016000	160
96026000	50
96083000	50
96100000	1000
96153000	50
96170000	50
96177880	80
96179000	200
96184000	200
96186000	400
96188000	160
96189000	160
96190000	50
96191000	100
96192000	160
96339000	56
96370000	100
96387000	18
96392000	160
96441000	6
96467000	80
96507000	100
96529000	200
96615000	27
96618000	160
96657000	31
97	
97116000	20
97231000	160
97450000	4000
97462000	140
98	
98066000	4500
98556000	80
98610000	160
98993000	100

brand	code no.	Euro	EAN	page
01				
HG	01000180	160.00	4059625350867	566
HG	01001180	160.00	4059625350850	566
HG	01002180	160.00	4059625350836	567
HG	01800180	137.30	4011097347240	176
HG	01850180	178.40	4011097677545	336
02				
HG	02024000	4.70	4011097100005	167
HG	02026000	32.20	4011097729220	233
06				
HG	06010000	2.60	4011097100135	602
10				
AX	10452180	459.80	4011097254104	365
AX	10490000	78.90	4011097432601	705
AX	10823000	149.00	4011097693712	689
AX	10823800	223.50	4011097694566	689
AX	10890000	55.40	4011097460901	705
AX	10891000	55.40	4011097462110	705
11				
AX	11095000	78.90	4011097165110	700
AX	11098000	67.70	4011097257051	702
13				
HG	13085000	8.90	4011097102184	700
HG	13085810	10.90	4011097423449	700
HG	13097000	35.00	4011097102375	699
HG	13111000	376.30	4011097754161	296
HG	13111400	376.30	4011097753928	296
HG	13114000	320.00	4011097678832	299
HG	13114140	479.90	4059625229774	299
HG	13114340	479.90	4059625229781	299
HG	13114670	447.90	4059625229798	299
HG	13114700	447.90	4059625229804	299
HG	13114990	479.90	4059625229811	299
HG	13115000	345.10	4011097678849	300
HG	13116000	250.50	4011097678856	300
HG	13116140	375.80	4059625229828	300
HG	13116340	375.80	4059625229835	300
HG	13116670	350.60	4059625229842	300
HG	13116700	350.60	4059625229859	300
HG	13116990	375.80	4059625229866	300
HG	13117000	275.60	4011097678863	301
HG	13122000	224.90	4011097739205	305
HG	13123000	287.40	4011097739229	306
HG	13132000	148.40	4011097526058	446
HG	13141000	488.60	4011097661308	294
HG	13141400	488.60	4011097666402	294
HG	13151000	653.40	4011097717036	291
HG	13151400	653.40	4011097717029	291
HG	13159180	210.00	4011097835310	373
HG	13161000	376.30	4011097661315	295
HG	13161400	376.30	4011097665696	295
HG	13171000	488.60	4011097717012	290
HG	13171400	488.60	4011097717005	290
HG	13182000	12.50	4011097668482	701
HG	13183000	1,470.80	4011097771021	289
HG	13184000	1,225.80	4011097771083	288
HG	13184400	1,225.80	4011097771076	288
HG	13201000	222.90	4011097799599	306
HG	13211000	175.70	4011097799582	306
HG	13233180	188.70	4011097629407	429
HG	13244180	289.00	4011097629414	378
AX	13290450	35.00	4011097102993	704
AX	13290480	35.00	4011097103013	704
HG	13414000	112.70	4011097532509	448

brand	code no.	Euro	EAN	page
HG	13423000	115.30	4011097603766	448
HG	13424000	124.80	4011097594774	448
HG	13437180	686.60	4011097660837	374
HG	13439180	350.10	4011097734033	375
HG	13440180	425.00	4059625321218	408
HG	13444180	838.00	4011097140841	376
HG	13473000	78.90	4011097178233	702
AX	13485000	14.40	4011097104416	700
HG	13560180	52.50	4059625202968	594
HG	13593000	46.80	4011097745015	337
HG	13593140	70.20	4059625346716	337
HG	13593340	70.20	4059625346723	337
HG	13593670	65.50	4059625346693	337
HG	13593700	65.50	4059625346709	337
HG	13593990	70.20	4059625346730	337
HG	13595000	50.40	4011097333670	337
HG	13597000	47.80	4011097564739	330
HG	13597140	71.80	4059625250075	330
HG	13597340	71.80	4059625346839	330
HG	13597670	67.00	4059625346815	330
HG	13597700	67.00	4059625346822	330
HG	13597990	71.80	4059625346846	330
HG	13601000	113.60	4011097783727	318
HG	13604000	100.20	4011097825915	317
HG	13620180	110.60	4011097228747	392
HG	13622180	220.50	4011097625386	363
AX	13690430	35.00	4011097104997	704
AX	13690450	35.00	4011097105017	704
AX	13690480	35.00	4011097105031	704
AX	13690610	35.00	4011097177304	704
HG	13893000	98.10	4011097105444	706
HG	13893450	98.10	4011097105475	706
HG	13901000	16.30	4011097537122	600
HG	13902000	14.00	4011097537139	599
HG	13903000	15.60	4011097646411	599
HG	13904000	30.10	4011097666778	599
HG	13912000	14.10	4011097413747	701
HG	13913000	10.90	4011097413754	701
HG	13914000	11.10	4011097413761	701
HG	13950000	32.70	4011097350721	599
HG	13950140	49.00	4011097957050	599
HG	13950340	49.00	4059625266151	599
HG	13950670	45.70	4059625266137	599
HG	13950700	45.70	4059625266144	599
HG	13950990	49.00	4011097957128	599
HG	13952000	28.20	4011097105932	699
HG	13954000	52.90	4011097360393	599
HG	13954820	79.40	4011097525532	599
HG	13961000	17.60	4011097105949	709
HG	13964000	35.00	4011097105970	699
HG	13970000	55.40	4011097105994	702
HG	13971000	67.70	4011097178578	702
HG	13981000	35.00	4011097177434	707
HG	13988000	98.10	4011097106557	709
HG	13989000	28.20	4011097106564	709
14				
HG	14091000	55.40	4011097177557	704
HG	14095000	78.90	4011097165103	699
HG	14096000	78.90	4011097176222	699
HG	14097000	78.90	4011097236995	699
HG	14098000	78.90	4011097237008	699
HG	14420000	185.90	4011097488424	397
HG	14495000	101.40	4011097255705	399
HG	14780000	502.90	4059625195970	641

brand	code no.	Euro	EAN	page
HG	14781000	406.10	4059625197110	643
HG	14782000	343.60	4059625198100	644
HG	14785000	436.40	4059625197998	641
HG	14786000	514.90	4059625195994	638
HG	14806000	387.40	4011097732992	658
HG	14820000	502.90	4011097718378	641
HG	14820800	653.40	4011097718361	641
HG	14821000	406.10	4011097718354	643
HG	14821800	528.60	4011097718347	643
HG	14822000	343.60	4011097718170	644
HG	14822800	446.80	4011097718330	644
HG	14823000	406.10	4011097718323	645
HG	14834000	448.00	4011097823690	642
HG	14834800	582.30	4011097823683	642
HG	14847000	382.60	4011097823676	641
HG	14847800	498.00	4011097823669	641
HG	14857000	459.70	4011097823652	640
HG	14857800	597.50	4011097823645	640
HG	14883000	436.40	4011097748559	641
HG	14883800	556.10	4011097748566	641
HG	14884000	514.90	4011097772783	638
HG	14884800	669.30	4011097772790	638
HG	14888000	464.40	4011097752631	645
HG	14890000	55.40	4011097362274	703
HG	14891000	55.40	4011097217253	703
HG	14893000	98.10	4011097260303	706
HG	14896000	55.40	4011097508009	705
HG	14920000	128.70	4011097153759	708
15				
HG	15310180	630.00	4011097815602	309
HG	15311180	735.00	4059625034057	310
HG	15312180	840.00	4059625034040	312
HG	15313180	945.00	4059625034033	313
HG	15346000	277.40	4011097727219	307
HG	15355000	1,256.30	4059625034019	308
HG	15355400	1,256.30	4011097815619	308
HG	15355600	1,256.30	4059625034002	308
HG	15356000	1,484.70	4059625033999	310
HG	15356400	1,484.70	4059625033982	310
HG	15356600	1,484.70	4059625033975	310
HG	15357000	1,713.10	4059625033968	311
HG	15357400	1,713.10	4059625033951	311
HG	15357600	1,713.10	4059625033944	311
HG	15358000	1,941.50	4059625033937	313
HG	15358400	1,941.50	4059625033920	313
HG	15358600	1,941.50	4059625033913	313
HG	15380000	1,154.40	4059625201350	308
HG	15380140	1,731.60	4059625241707	308
HG	15380340	1,731.60	4059625241691	308
HG	15380670	1,500.60	4059625241684	308
HG	15380700	1,500.60	4059625201336	308
HG	15380990	1,731.60	4059625241677	308
HG	15381000	1,371.20	4059625201312	309
HG	15381700	1,782.40	4059625201299	309
HG	15382000	1,587.90	4059625201275	311
HG	15382140	2,381.90	4059625241967	311
HG	15382340	2,381.90	4059625241974	311
HG	15382670	2,064.30	4059625241981	311
HG	15382700	2,064.30	4059625201251	311
HG	15382990	2,381.90	4059625241998	311
HG	15384000	1,804.70	4059625201237	312
HG	15384700	2,345.90	4059625201213	312
HG	15597000	46.70	4011097625027	336
HG	15597140	70.00	4059625346785	336
HG	15597340	70.00	4059625346792	336
HG	15597670	65.30	4059625346761	336
HG	15597700	65.30	4059625346778	336
HG	15597990	70.00	4059625346808	336
HG	15705000	248.90	4011097741727	328
HG	15706000	404.50	4011097741710	327
HG	15707000	404.50	4011097741703	327
HG	15708000	454.10	4011097741697	327
HG	15712000	404.50	4059625028728	326
HG	15714000	454.10	4059625028735	326
HG	15714140	681.10	4059625230244	326
HG	15714340	681.10	4059625230251	326
HG	15714670	635.80	4059625230268	326
HG	15714700	635.80	4059625230275	326
HG	15714990	681.10	4059625230282	326
HG	15734400	516.00	4011097777528	314
HG	15735400	710.20	4011097777511	315
HG	15736400	516.00	4011097777504	315
HG	15737400	710.20	4011097777498	313
HG	15738400	776.90	4011097777481	314
HG	15741000	415.00	4011097741369	322
HG	15742000	574.50	4011097741352	323
HG	15743000	625.60	4011097741345	322
HG	15743140	938.50	4059625142424	322
HG	15743340	938.50	4059625244548	322
HG	15743670	875.80	4059625266069	322
HG	15743700	875.80	4059625266076	322
HG	15743990	938.50	4059625266083	322
HG	15744000	574.50	4011097741338	321
HG	15745000	415.00	4011097741321	323
HG	15747000	478.80	4011097746388	324
HG	15748000	530.10	4011097749631	324
HG	15755000	248.90	4011097741680	329
HG	15756000	404.50	4011097741673	329
HG	15757000	404.50	4011097741666	328
HG	15758000	454.10	4011097741659	328
HG	15758140	681.10	4059625155028	328
HG	15758340	681.10	4059625216682	328
HG	15758670	635.80	4059625266038	328
HG	15758700	635.80	4059625266045	328
HG	15758990	681.10	4059625266052	328
HG	15760000	415.00	4011097719870	319
HG	15760140	622.60	4059625355893	319
HG	15760340	622.60	4059625355879	319
HG	15760670	581.00	4059625355855	319
HG	15760700	581.00	4059625355831	319
HG	15760990	622.60	4059625355817	319
HG	15761000	574.50	4011097719863	319
HG	15762000	574.50	4011097719856	317
HG	15763000	625.60	4011097719849	317
HG	15763140	938.50	4059625230299	317
HG	15763340	938.50	4059625230909	317
HG	15763670	875.80	4059625230916	317
HG	15763700	875.80	4059625230923	317
HG	15763990	938.50	4059625230930	317
HG	15764000	415.00	4011097719832	320
HG	15764140	622.60	4059625355794	320
HG	15764340	622.60	4059625355770	320
HG	15764670	581.00	4059625355756	320
HG	15764700	581.00	4059625355732	320
HG	15764990	622.60	4059625355718	320
HG	15765000	766.10	4011097719825	318
HG	15767000	478.80	4011097746364	320
HG	15768000	530.10	4011097749624	321

brand	code no.	Euro	EAN	page
HG	15773000	288.90	4059625196076	298
HG	15774000	353.10	4059625196069	299
HG	15930180	263.20	4011097345239	331
HG	15932000	131.40	4011097487984	329
HG	15956000	62.70	4011097629360	337
HG	15970180	91.90	4011097345208	329
HG	15972000	98.20	4011097487960	329
HG	15973180	84.60	4011097345215	331
HG	15974180	87.90	4011097345222	329
HG	15981180	167.00	4011097415772	331
HG	15984180	160.90	4011097727073	392
16				
AX	16391000	44.90	4011097111483	705
AX	16884000	41.40	4011097515915	167
AX	16884820	62.10	4011097515922	167
AX	16991000	44.90	4011097112367	705
AX	16993000	44.90	4011097112411	705
19				
AX	19418000	431.20	4011097664637	373
21				
HG	21140700	15.70	4059625250341	562
HG	21141000	10.70	4059625250358	562
HG	21142000	10.70	4059625250365	562
HG	21143000	10.70	4059625250372	563
HG	21144000	10.70	4059625250389	563
HG	21145000	10.70	4059625250396	563
HG	21146000	10.70	4059625250402	563
24				
HG	24001400	2,696.60	4011097772219	176
HG	24001600	2,696.60	4011097983165	176
HG	24002400	1,593.60	4011097771182	181
HG	24002600	1,593.60	4011097975764	181
HG	24003400	1,716.10	4011097771243	180
HG	24003600	1,716.10	4011097983066	180
HG	24004400	2,083.90	4011097771304	180
HG	24004600	2,083.90	4011097983080	180
HG	24005400	2,206.30	4011097771366	179
HG	24005600	2,206.30	4011097983103	179
HG	24006400	2,328.80	4011097771380	178
HG	24006600	2,328.80	4011097983127	178
HG	24007400	2,451.60	4011097771397	177
HG	24007600	2,451.60	4011097983141	177
HG	24010180	245.20	4011097771175	178
HG	24011400	2,696.60	4011097772226	176
HG	24012400	1,593.60	4011097771151	178
HG	24013400	1,716.10	4011097771229	180
HG	24014400	2,083.90	4011097771281	178
HG	24015400	2,206.30	4011097771342	179
HG	24016400	2,328.80	4011097772202	178
HG	24017400	2,451.60	4011097772332	177
HG	24100000	35.00	4059625315897	98
HG	24100670	45.50	4059625316016	98
HG	24100700	45.50	4059625316009	98
HG	24101000	35.00	4059625320556	98
HG	24101670	45.50	4059625320570	98
HG	24101700	45.50	4059625320563	98
HG	24110000	35.00	4059625310915	99
HG	24110670	45.50	4059625313046	99
HG	24110700	45.50	4059625313039	99
HG	24111000	35.00	4059625310922	99
HG	24111670	45.50	4059625338773	99
HG	24111700	45.50	4059625338766	99
HG	24120000	26.50	4059625316023	99
HG	24120670	34.50	4059625316047	99

brand	code no.	Euro	EAN	page
HG	24120700	34.50	4059625316030	99
HG	24121000	26.50	4059625320587	530
HG	24121670	34.50	4059625320600	530
HG	24121700	34.50	4059625320594	530
HG	24130000	85.00	4059625313718	203
HG	24130670	110.50	4059625313732	203
HG	24130700	110.50	4059625313725	203
HG	24132000	85.00	4059625316894	534
HG	24132670	110.50	4059625317013	534
HG	24132700	110.50	4059625317006	534
HG	24139000	50.00	4059625340974	215
HG	24139670	65.00	4059625340998	215
HG	24139700	65.00	4059625340981	215
HG	24140000	250.00	4059625340073	203
HG	24140670	325.00	4059625340097	203
HG	24140700	325.00	4059625340080	203
HG	24141000	250.00	4059625340707	203
HG	24141670	325.00	4059625340721	203
HG	24141700	325.00	4059625340714	203
HG	24149000	80.00	4059625341063	215
HG	24149670	104.00	4059625341087	215
HG	24149700	104.00	4059625341070	215
HG	24150000	470.00	4059625340851	202
HG	24150670	611.00	4059625340875	202
HG	24150700	611.00	4059625340868	202
HG	24151000	470.00	4059625340882	202
HG	24151670	611.00	4059625340905	202
HG	24151700	611.00	4059625340899	202
HG	24160000	95.00	4059625348048	121
HG	24160670	133.00	4059625358214	121
HG	24160700	133.00	4059625358221	121
HG	24161000	95.00	4059625348031	121
HG	24161670	133.00	4059625358238	121
HG	24161700	133.00	4059625358245	121
HG	24170000	110.00	4059625348024	121
HG	24170670	154.00	4059625358252	121
HG	24170700	154.00	4059625358269	121
HG	24171000	110.00	4059625348017	121
HG	24171670	154.00	4059625358276	121
HG	24171700	154.00	4059625358283	121
HG	24220000	740.00	4059625358375	243
HG	24221000	740.00	4059625358290	243
HG	24230000	795.00	4059625358306	244
HG	24240000	840.00	4059625358313	242
HG	24240670	1,092.00	4059625358320	242
HG	24240700	1,092.00	4059625358337	242
HG	24241000	840.00	4059625358344	242
HG	24241670	1,092.00	4059625358351	242
HG	24241700	1,092.00	4059625358368	242
HG	24250670	418.00	4059625368251	561
HG	24250700	418.00	4059625368244	561
HG	24260000	430.00	4059625368268	142
HG	24270000	445.00	4059625368275	142
HG	24291670	98.00	4059625368299	561
HG	24291700	98.00	4059625368282	561
HG	24301000	49.00	4059625347928	157
HG	24301670	63.70	4059625358382	157
HG	24301700	63.70	4059625358399	157
HG	24302000	55.00	4059625347911	156
HG	24302670	71.50	4059625358405	156
HG	24302700	71.50	4059625358412	156
HG	24303000	59.00	4059625347904	157
HG	24303670	76.70	4059625358429	157
HG	24303700	76.70	4059625358436	157

brand	code no.	Euro	EAN	page
HG	24340000	412.70	4059625358443	292
HG	24340670	536.50	4059625358450	292
HG	24340700	536.50	4059625358467	292
HG	24360000	341.40	4059625358474	292
HG	24360670	443.80	4059625358481	292
HG	24360700	443.80	4059625358498	292
HG	24400000	70.00	4059625347799	148
HG	24401000	77.00	4059625347782	148
25				
HG	25968000	55.40	4011097460079	693
26				
HG	26014000	94.30	4059625136621	97
HG	26014140	141.40	4059625346907	97
HG	26014340	141.40	4059625346914	97
HG	26014670	132.00	4059625346921	97
HG	26014700	132.00	4059625346938	97
HG	26014990	141.40	4059625346945	97
HG	26079000	500.00	4059625315125	274
HG	26085000	229.00	4059625319994	105
HG	26089000	385.00	4059625315101	272
HG	26089670	539.00	4059625338667	272
HG	26090000	19.50	4059625299142	532
HG	26093000	100.00	4059625302514	534
HG	26094000	100.00	4059625302507	535
HG	26095000	100.00	4059625302491	213
HG	26096000	100.00	4059625302484	214
HG	26097000	385.00	4059625314791	276
HG	26097670	539.00	4059625338650	276
HG	26098000	500.00	4059625314784	278
HG	26099000	315.00	4059625314777	275
HG	26099670	441.00	4059625338643	275
HG	26115000	4,341.50	4011097679174	188
HG	26117000	5,177.70	4011097679167	188
HG	26220000	337.50	4011097790992	207
HG	26220140	506.20	4059625264126	207
HG	26220340	506.20	4059625264102	207
HG	26220670	472.50	4059625264089	207
HG	26220700	472.50	4059625264096	207
HG	26220990	506.20	4059625264119	207
HG	26221000	339.60	4011097791104	207
HG	26221140	509.40	4059625203798	207
HG	26221340	509.40	4059625217030	207
HG	26221670	475.50	4059625264058	207
HG	26221700	475.50	4059625264065	207
HG	26221990	509.40	4059625264072	207
HG	26226000	748.00	4059625201084	181
HG	26226700	972.20	4059625201077	181
HG	26227000	748.00	4059625200780	181
HG	26227700	972.20	4059625200797	181
HG	26228000	628.60	4059625201565	182
HG	26228140	943.00	4059625264775	182
HG	26228340	943.00	4059625264751	182
HG	26228670	817.20	4059625264744	182
HG	26228700	817.20	4059625201558	182
HG	26228990	943.00	4059625264768	182
HG	26229000	628.60	4059625200902	182
HG	26229140	943.00	4059625264812	182
HG	26229340	943.00	4059625264799	182
HG	26229670	817.20	4059625264782	182
HG	26229700	817.20	4059625200919	182
HG	26229990	943.00	4059625264805	182
HG	26230000	856.30	4059625200926	183
HG	26230140	1,284.50	4059625264737	183
HG	26230340	1,284.50	4059625264713	183

brand	code no.	Euro	EAN	page
HG	26230670	1,113.20	4059625264706	183
HG	26230700	1,113.20	4059625201541	183
HG	26230990	1,284.50	4059625264720	183
HG	26231000	736.90	4059625201534	184
HG	26231140	1,105.50	4059625264898	184
HG	26231340	1,105.50	4059625264874	184
HG	26231670	958.20	4059625264867	184
HG	26231700	958.20	4059625201527	184
HG	26231990	1,105.50	4059625264881	184
HG	26232000	1,073.10	4059625201510	185
HG	26232700	1,394.90	4059625201503	185
HG	26233000	1,073.10	4059625201497	185
HG	26233700	1,394.90	4059625201480	185
HG	26234000	1,181.40	4059625201473	186
HG	26234140	1,772.10	4059625264850	186
HG	26234340	1,772.10	4059625264836	186
HG	26234670	1,535.80	4059625264829	186
HG	26234700	1,535.80	4059625201466	186
HG	26234990	1,772.10	4059625264843	186
HG	26238000	565.30	4011097853420	193
HG	26238140	848.00	4059625230718	193
HG	26238340	848.00	4059625230725	193
HG	26238670	791.60	4059625230732	193
HG	26238700	791.60	4059625230749	193
HG	26238990	848.00	4059625230756	193
HG	26239000	565.30	4011097975658	193
HG	26243000	487.80	4059625201435	219
HG	26243700	634.00	4059625201428	219
HG	26250000	531.10	4011097853413	194
HG	26250140	796.70	4059625191934	194
HG	26250340	796.70	4059625230763	194
HG	26250670	743.70	4059625230770	194
HG	26250700	743.70	4059625230787	194
HG	26250990	796.70	4059625230794	194
HG	26251000	531.10	4011097975665	194
HG	26252000	856.60	4011097975672	194
HG	26253000	856.60	4011097975689	195
HG	26254180	125.60	4011097975696	195
HG	26257000	337.10	4059625196106	206
HG	26258000	337.10	4059625196090	206
HG	26270000	19.50	4059625299135	104
HG	26270670	27.30	4059625339145	104
HG	26271000	100.00	4059625302170	213
HG	26271670	140.00	4059625339121	213
HG	26272000	315.00	4059625328934	275
HG	26272670	441.00	4059625330067	275
HG	26273000	36.50	4059625325575	162
HG	26274000	500.00	4059625328941	274
HG	26275000	47.90	4059625333228	138
HG	26276000	385.00	4059625314760	272
HG	26276670	539.00	4059625339084	272
HG	26277000	100.00	4059625302163	213
HG	26277670	140.00	4059625339077	213
HG	26278000	36.50	4059625325582	162
HG	26279000	47.90	4059625333235	138
HG	26281000	100.00	4059625302156	214
HG	26281670	140.00	4059625339053	214
HG	26282000	315.00	4059625315873	279
HG	26282670	441.00	4059625339039	279
HG	26283000	100.00	4059625302149	214
HG	26283670	140.00	4059625339022	214
HG	26284000	500.00	4059625328958	278
HG	26285000	755.00	4059625326602	273
HG	26286000	385.00	4059625314753	276

brand	code no.	Euro	EAN	page
HG	26286670	539.00	4059625330074	276
HG	26287000	755.00	4059625326596	277
HG	26289000	315.00	4059625339015	279
HG	26289670	441.00	4059625339008	279
HG	26318000	385.00	4059625338995	535
HG	26319000	385.00	4059625338988	536
HG	26320000	282.90	4011097804330	120
HG	26322000	294.70	4011097804316	120
HG	26322400	294.70	4011097787855	120
HG	26323000	294.70	4011097804309	120
HG	26324000	412.60	4011097804293	118
HG	26326000	412.60	4011097804279	119
HG	26328400	149.40	4011097787794	529
HG	26329000	153.30	4011097787787	529
HG	26330400	21.20	4011097780689	103
HG	26331400	18.80	4011097780672	103
HG	26332400	23.40	4011097780665	103
HG	26333400	21.20	4011097780658	103
HG	26334400	21.20	4011097780641	531
HG	26336400	23.40	4011097792064	531
HG	26340000	19.50	4059625299128	104
HG	26340670	27.30	4059625338971	104
HG	26365000	1,175.00	4059625320419	213
HG	26371000	282.00	4059625338964	139
HG	26401000	188.60	4011097804255	152
HG	26402000	200.30	4011097804248	152
HG	26403400	318.20	4011097804231	152
HG	26404400	318.20	4011097804224	152
HG	26405000	47.00	4059625316351	217
HG	26405670	65.80	4059625326589	217
HG	26406000	45.00	4059625316344	218
HG	26406670	63.00	4059625326565	218
HG	26407000	60.00	4059625316337	214
HG	26407670	84.00	4059625326541	214
HG	26410400	66.50	4011097744872	158
HG	26411400	79.30	4011097744865	158
HG	26412400	66.50	4011097760285	158
HG	26413400	79.30	4011097760292	157
HG	26420400	63.10	4011097757025	158
HG	26421400	75.40	4011097757018	158
HG	26422670	67.10	4059625365793	138
HG	26423670	66.70	4059625365816	138
HG	26424400	63.10	4011097757049	158
HG	26425400	75.40	4011097757032	157
HG	26442000	272.50	4011097705941	189
HG	26443000	272.50	4011097705958	189
HG	26453000	27.00	4011097756868	166
HG	26453140	40.50	4059625142448	166
HG	26453340	40.50	4059625308509	166
HG	26453670	37.80	4059625308523	166
HG	26453700	37.80	4059625308516	166
HG	26453990	40.50	4059625308530	166
HG	26455000	27.00	4011097756851	167
HG	26455140	40.50	4011097837291	167
HG	26455340	40.50	4011097837284	167
HG	26455670	37.80	4059625230947	167
HG	26455700	37.80	4059625230954	167
HG	26455990	40.50	4011097837390	167
HG	26456000	160.60	4011097814803	165
HG	26456400	160.60	4011097786902	165
HG	26457000	27.00	4011097756875	167
HG	26457140	40.50	4011097891873	167
HG	26457340	40.50	4011097891866	167
HG	26457670	37.80	4059625304778	167
HG	26457700	37.80	4059625304761	167
HG	26457990	40.50	4011097891972	167
HG	26464000	236.50	4011097689678	208
HG	26465000	236.50	4011097689685	208
HG	26466000	445.00	4011097720562	192
HG	26466400	445.00	4011097720555	192
HG	26467000	406.90	4011097720548	191
HG	26467400	406.90	4011097720531	191
HG	26469000	406.90	4011097720524	191
HG	26470000	445.00	4011097720500	192
HG	26470400	445.00	4011097720494	192
HG	26471180	100.50	4011097718637	190
HG	26472000	439.30	4011097718620	190
HG	26481000	439.30	4011097718613	190
HG	26485000	85.00	4011097767536	165
HG	26486000	85.00	4011097767543	165
HG	26487000	85.00	4011097767550	165
HG	26503000	67.90	4011097756820	149
HG	26504000	74.20	4011097756837	148
HG	26505000	49.00	4011097773810	149
HG	26506000	55.20	4011097773803	148
HG	26511000	68.50	4011097857046	693
HG	26511400	68.50	4011097857039	693
HG	26511600	68.50	4011097961286	693
HG	26515000	94.30	4059625326763	97
HG	26516000	94.30	4059625326770	530
HG	26519000	19.90	4011097693200	153
HG	26520000	92.40	4011097706047	97
HG	26520140	138.70	4059625230824	97
HG	26520340	138.70	4059625221297	97
HG	26520400	92.40	4011097706085	97
HG	26520670	129.50	4059625230817	97
HG	26520700	129.50	4059625230800	97
HG	26520990	138.70	4059625230961	97
HG	26521000	92.40	4011097706054	97
HG	26521400	92.40	4011097706092	97
HG	26522000	251.20	4011097741956	205
HG	26522400	251.20	4011097741963	205
HG	26523000	251.20	4011097741970	205
HG	26524000	251.20	4011097751993	204
HG	26524400	251.20	4011097752006	204
HG	26528000	251.20	4011097752068	204
HG	26528400	251.20	4011097752075	204
HG	26530000	92.40	4011097706764	98
HG	26530140	138.70	4059625264027	98
HG	26530340	138.70	4059625264010	98
HG	26530400	92.40	4011097726663	98
HG	26530670	129.50	4059625263990	98
HG	26530700	129.50	4059625264003	98
HG	26530990	138.70	4059625026830	98
HG	26531000	92.40	4011097719115	98
HG	26531140	138.70	4059625265925	98
HG	26531340	138.70	4059625265901	98
HG	26531400	92.40	4011097726946	98
HG	26531670	129.50	4059625265888	98
HG	26531700	129.50	4059625265895	98
HG	26531990	138.70	4059625265918	98
HG	26532400	51.60	4011097792057	133
HG	26533400	49.30	4011097792040	135
HG	26534400	54.10	4011097792033	133
HG	26535400	51.60	4011097792026	135
HG	26536400	57.70	4011097792019	132
HG	26537400	55.20	4011097792002	134
HG	26538400	59.80	4011097791999	132

brand	code no.	Euro	EAN	page
HG	26539400	57.70	4011097791982	134
HG	26550000	118.20	4011097720067	96
HG	26550400	118.20	4011097720050	96
HG	26551000	118.20	4011097720043	96
HG	26551400	118.20	4011097720036	96
HG	26553400	57.70	4011097791975	134
HG	26554400	51.60	4011097791968	533
HG	26555400	54.10	4011097791951	532
HG	26560400	127.50	4011097744858	127
HG	26561400	127.50	4011097736228	127
HG	26562400	111.70	4011097744841	128
HG	26563400	111.70	4011097736433	128
HG	26564400	99.30	4011097744834	129
HG	26565400	99.30	4011097736426	129
HG	26566400	118.20	4011097767048	129
HG	26567400	37.00	4011097791944	161
HG	26568400	37.00	4011097791937	161
HG	26569400	39.60	4011097791920	161
HG	26570400	133.80	4011097744827	126
HG	26571400	133.80	4011097736419	126
HG	26572400	118.20	4011097744810	127
HG	26573400	118.20	4011097736402	127
HG	26574400	105.60	4011097744803	128
HG	26575400	105.60	4011097736396	128
HG	26579000	1,175.00	4059625320433	214
HG	26580400	127.50	4011097753911	122
HG	26581400	127.50	4011097736389	122
HG	26582400	111.70	4011097753904	124
HG	26583400	111.70	4011097736372	124
HG	26584400	99.30	4011097753898	125
HG	26585400	99.30	4011097736365	125
HG	26586400	118.20	4011097767055	126
HG	26590400	133.80	4011097753881	122
HG	26591400	133.80	4011097736358	122
HG	26592400	118.20	4011097753850	123
HG	26593400	118.20	4011097736341	123
HG	26594400	105.60	4011097753843	125
HG	26595400	105.60	4011097736334	125
HG	26600000	674.80	4011097754369	197
HG	26601000	714.10	4011097754826	197
HG	26604000	629.00	4011097754383	195
HG	26605000	665.20	4011097754390	196
HG	26620000	192.60	4011097706061	113
HG	26620400	192.60	4011097706078	113
HG	26621000	199.10	4011097706306	112
HG	26621400	199.10	4011097706313	112
HG	26622000	192.60	4011097711799	113
HG	26622400	192.60	4011097712000	113
HG	26623000	199.10	4011097712017	112
HG	26623400	199.10	4011097712024	112
HG	26626000	358.10	4011097691893	113
HG	26626400	358.10	4011097692043	113
HG	26630000	192.60	4011097719108	115
HG	26630400	192.60	4011097726953	115
HG	26631000	199.10	4011097719092	115
HG	26631400	199.10	4011097726960	115
HG	26632000	192.60	4011097719085	115
HG	26633000	199.10	4011097719078	115
HG	26640540	87.00	4059625301951	106
HG	26640560	87.00	4059625301944	106
HG	26640670	87.00	4059625301937	106
HG	26640700	87.00	4059625301920	106
HG	26690400	34.80	4011097791913	161
HG	26691400	37.00	4011097791906	160
HG	26692400	39.60	4011097791890	160
HG	26693400	39.60	4011097791883	160
HG	26694400	41.90	4011097791876	160
HG	26700000	124.50	4011097808741	155
HG	26701000	124.50	4011097808727	156
HG	26720000	126.70	4011097758107	155
HG	26720400	126.70	4011097758114	155
HG	26721000	126.70	4011097758121	156
HG	26721400	126.70	4011097758138	156
HG	26722000	212.30	4011097770987	210
HG	26723000	212.30	4011097770970	211
HG	26724000	214.50	4011097770963	211
HG	26725000	212.30	4011097770956	211
HG	26726000	212.30	4011097770949	210
HG	26727000	214.50	4011097770932	210
HG	26790000	802.90	4011097801711	245
HG	26791000	767.90	4011097801704	248
HG	26792000	977.30	4011097801698	247
HG	26793000	721.40	4011097806280	249
HG	26794000	805.00	4011097806297	245
HG	26800400	65.90	4011097744599	101
HG	26801400	65.90	4011097736273	101
HG	26802400	50.30	4011097744582	101
HG	26803400	50.30	4011097736266	101
HG	26804400	37.80	4011097744575	101
HG	26805400	37.80	4011097736327	101
HG	26806400	37.80	4011097752037	101
HG	26810400	65.90	4011097750026	100
HG	26811400	65.90	4011097736259	100
HG	26812400	50.30	4011097750033	100
HG	26813400	50.30	4011097736242	100
HG	26814140	56.80	4059625346617	100
HG	26814340	56.80	4059625346624	100
HG	26814400	37.80	4011097750040	100
HG	26814670	52.90	4059625346594	100
HG	26814700	52.90	4059625346600	100
HG	26814990	56.80	4059625346631	100
HG	26815140	56.80	4059625346662	100
HG	26815340	56.80	4059625346679	100
HG	26815400	37.80	4011097736235	100
HG	26815670	52.90	4059625346648	100
HG	26815700	52.90	4059625346655	100
HG	26815990	56.80	4059625346686	100
HG	26816400	37.80	4011097752136	100
HG	26840180	119.20	4059625241660	228
HG	26842000	1,354.90	4059625241653	228
HG	26842700	1,761.20	4059625241646	228
HG	26843000	357.70	4059625201411	164
HG	26843700	465.00	4059625201404	164
HG	26844000	271.10	4059625201398	541
HG	26844700	352.30	4059625201381	541
HG	26851000	168.00	4059625216095	154
HG	26851700	218.40	4059625216408	154
HG	26852000	165.90	4059625216415	154
HG	26852700	215.60	4059625216422	154
HG	26856000	151.70	4059625216439	154
HG	26856700	197.30	4059625216446	154
HG	26857000	149.60	4059625216453	154
HG	26857700	194.40	4059625216460	154
HG	26858000	357.70	4059625201374	165
HG	26858700	465.00	4059625201367	165
HG	26864000	102.90	4059625189696	96
HG	26864140	154.40	4059625264935	96
HG	26864340	154.40	4059625264911	96

brand	code no.	Euro	EAN	page
HG	26864670	133.90	4059625264904	96
HG	26864700	133.90	4059625189702	96
HG	26864990	154.40	4059625264928	96
HG	26865000	102.90	4059625198544	96
HG	26865140	154.40	4059625264973	96
HG	26865340	154.40	4059625264959	96
HG	26865670	133.90	4059625264942	96
HG	26865700	133.90	4059625198575	96
HG	26865990	154.40	4059625264966	96
HG	26866000	86.70	4059625213407	96
HG	26866140	130.00	4059625265710	96
HG	26866340	130.00	4059625265673	96
HG	26866670	112.80	4059625264980	96
HG	26866700	112.80	4059625220054	96
HG	26866990	130.00	4059625265703	96
HG	26867000	86.70	4059625220085	96
HG	26867140	130.00	4059625265758	96
HG	26867340	130.00	4059625265734	96
HG	26867670	112.80	4059625265727	96
HG	26867700	112.80	4059625220092	96
HG	26867990	130.00	4059625265741	96
HG	26890140	1,259.50	4059625265970	246
HG	26890340	1,259.50	4059625265956	246
HG	26890670	1,176.00	4059625265932	246
HG	26890700	1,176.00	4059625265949	246
HG	26890990	1,259.50	4059625265963	246
HG	26891140	1,262.70	4059625266021	246
HG	26891340	1,262.70	4059625266007	246
HG	26891670	1,179.20	4059625265987	246
HG	26891700	1,179.20	4059625265994	246
HG	26891990	1,262.70	4059625266014	246
27				
HG	27008000	2,621.30	4011097691886	279
HG	27008400	2,621.30	4011097662251	279
HG	27013400	289.10	4011097745152	143
HG	27014400	295.20	4011097745169	143
HG	27028400	3,432.20	4011097771106	227
HG	27029400	3,922.40	4011097771120	226
HG	27032000	332.90	4011097679655	145
HG	27033000	340.00	4011097679662	144
HG	27034000	327.10	4011097679679	145
HG	27035000	334.20	4011097679686	144
HG	27036000	551.20	4011097679303	141
HG	27036400	551.20	4011097691824	141
HG	27037000	559.00	4011097679310	141
HG	27037400	559.00	4011097691831	141
HG	27038000	501.10	4011097727936	140
HG	27038400	501.10	4011097727943	140
HG	27039000	509.00	4011097727950	140
HG	27039400	509.00	4011097727967	140
HG	27081400	289.10	4011097755243	142
HG	27082400	295.20	4011097755250	142
HG	27085000	357.90	4011097537566	146
HG	27086000	333.80	4011097537573	146
HG	27106400	3,922.40	4011097771113	226
HG	27109400	3,432.20	4011097771090	227
HG	27112000	1,459.80	4011097679549	231
HG	27112400	1,459.80	4011097679556	231
HG	27113000	1,590.80	4011097679563	232
HG	27113400	1,590.80	4011097679570	232
HG	27114000	1,116.20	4011097679587	239
HG	27115000	893.10	4011097679594	240
HG	27116000	893.10	4011097690117	240
HG	27117000	1,130.00	4011097690124	241

brand	code no.	Euro	EAN	page
HG	27126000	1,733.50	4011097716954	230
HG	27126400	1,733.50	4011097716947	230
HG	27127000	2,054.30	4011097716930	229
HG	27127400	2,054.30	4011097716923	229
HG	27129000	1,077.80	4011097718132	237
HG	27129400	1,077.80	4011097718125	237
HG	27133000	1,279.90	4011097718118	236
HG	27133400	1,279.90	4011097718101	236
HG	27185000	710.00	4011097689692	260
HG	27188000	710.00	4011097690148	260
HG	27222000	667.10	4011097690155	262
HG	27223000	922.10	4011097690162	261
HG	27224000	539.20	4011097690179	263
HG	27247400	353.10	4011097770000	253
HG	27248400	353.10	4011097770024	257
HG	27253400	719.00	4011097745114	250
HG	27254400	719.00	4011097751740	250
HG	27255400	681.10	4011097751733	252
HG	27256400	719.00	4011097751726	254
HG	27257400	719.00	4011097751719	254
HG	27258400	681.10	4011097751702	256
HG	27267000	459.70	4011097775944	264
HG	27268000	461.90	4011097775937	264
HG	27269000	424.30	4011097775920	266
HG	27270000	377.10	4011097775913	267
HG	27271000	459.70	4011097775906	268
HG	27281000	461.90	4011097775890	268
HG	27283000	1,733.50	4011097755205	230
HG	27283400	1,733.50	4011097755212	230
HG	27284000	424.30	4011097775883	270
HG	27286000	1,459.80	4011097754246	231
HG	27286400	1,459.80	4011097754253	231
HG	27288000	1,733.50	4011097751245	233
HG	27288400	1,733.50	4011097751238	233
HG	27289000	377.10	4011097775876	271
HG	27294000	857.00	4011097773896	204
HG	27295000	857.00	4011097775500	205
HG	27297000	1,212.30	4011097775524	192
HG	27298000	636.60	4011097801681	269
HG	27320000	636.60	4011097801674	265
HG	27337000	534.10	4011097720609	190
HG	27337400	534.10	4011097720593	190
HG	27351400	908.10	4011097769011	251
HG	27352400	908.10	4011097769028	255
HG	27355000	55.90	4011097815732	151
HG	27356000	61.90	4011097815749	151
HG	27361000	1,427.60	4011097971735	235
HG	27362000	1,427.60	4011097971728	235
HG	27363000	1,667.40	4011097971711	234
HG	27364000	1,667.40	4011097971704	234
HG	27370000	553.60	4011097625126	196
HG	27371000	669.60	4011097625140	195
HG	27375000	558.50	4011097655727	196
HG	27376000	665.20	4011097691435	196
HG	27378000	572.20	4011097720586	191
HG	27378400	572.20	4011097720579	191
HG	27380000	512.90	4011097625119	196
HG	27381000	629.00	4011097625133	195
HG	27388000	84.10	4011097783253	218
HG	27389000	84.10	4011097783260	218
HG	27389140	126.60	4059625234471	218
HG	27389340	126.60	4059625234488	218
HG	27389670	118.30	4059625234495	218
HG	27389700	118.30	4059625234464	218

brand	code no.	Euro	EAN	page
HG	27389990	126.60	4059625234457	218
HG	27393000	59.10	4011097769837	217
HG	27393140	88.60	4059625234518	217
HG	27393340	88.60	4059625234525	217
HG	27393670	82.70	4059625234440	217
HG	27393700	82.70	4059625234501	217
HG	27393990	88.60	4059625234532	217
HG	27405000	657.00	4011097592466	202
HG	27405090	821.20	4011097815701	202
HG	27409000	61.80	4011097476124	216
HG	27411000	22.60	4011097112930	216
HG	27412000	61.80	4011097112947	216
HG	27413000	87.30	4011097112978	216
HG	27413140	130.90	4011097819983	216
HG	27413340	130.90	4011097819976	216
HG	27413670	122.20	4059625264034	216
HG	27413700	122.20	4059625264041	216
HG	27413990	130.90	4011097820064	216
HG	27414000	42.90	4011097614083	167
HG	27424000	698.80	4011097592459	201
HG	27424090	873.40	4011097806426	201
HG	27438000	75.20	4011097113128	216
HG	27441000	52.00	4011097537580	209
HG	27443000	81.30	4011097537597	209
HG	27446000	87.30	4011097759746	217
HG	27452000	89.50	4011097235219	166
HG	27453000	32.70	4011097514383	166
HG	27454000	27.30	4011097113258	166
HG	27454140	41.00	4011097892863	166
HG	27454340	41.00	4011097892825	166
HG	27454670	38.20	4059625266090	166
HG	27454700	38.20	4059625266106	166
HG	27454990	41.00	4011097113425	166
HG	27456000	58.90	4011097526782	166
HG	27458000	52.80	4011097113449	166
HG	27461000	600.80	4011097528205	200
HG	27463000	558.20	4011097528229	201
HG	27467000	58.90	4011097759753	218
HG	27474000	595.70	4011097413693	200
HG	27477000	553.30	4011097413709	201
HG	27478000	417.20	4011097415819	201
HG	27479000	58.90	4011097381138	217
HG	27479140	88.30	4011097838632	217
HG	27479340	88.30	4011097838625	217
HG	27479670	82.40	4059625346853	217
HG	27479700	82.40	4059625346860	217
HG	27479990	88.30	4011097838694	217
HG	27492000	739.10	4011097583556	197
HG	27493000	714.10	4011097563831	197
HG	27494000	674.80	4011097563824	197
HG	27505000	31.50	4011097678733	166
HG	27506000	35.80	4011097678726	166
HG	27521000	19.10	4011097157818	163
HG	27558000	37.40	4011097570228	161
HG	27559000	39.60	4011097570242	161
HG	27574000	58.60	4011097663968	160
HG	27575000	60.40	4011097663975	160
HG	27576000	32.40	4011097663982	162
HG	27577000	35.60	4011097663999	162
HG	27592000	67.40	4011097537436	159
HG	27593000	93.70	4011097537443	159
HG	27594000	69.90	4011097537450	159
HG	27595000	100.10	4011097537474	159
HG	27607000	427.40	4059625137161	198

brand	code no.	Euro	EAN	page
HG	27609000	53.70	4011097626871	151
HG	27610000	86.70	4011097537504	150
HG	27611000	77.30	4011097537511	150
HG	27614000	59.80	4011097570167	151
HG	27615000	56.50	4011097570174	151
HG	27617000	173.60	4011097594590	153
HG	27617820	260.50	4011097594903	153
HG	27620000	394.40	4059625137178	199
HG	27623000	361.50	4059625137185	199
HG	27623670	508.20	4059625340028	199
HG	27623700	508.20	4059625340011	199
HG	27630000	759.70	4059625196052	258
HG	27633000	987.90	4059625154892	238
HG	27633140	1,481.90	4059625230978	238
HG	27633340	1,481.90	4059625230985	238
HG	27633670	1,383.00	4059625230992	238
HG	27633700	1,383.00	4059625231005	238
HG	27633990	1,481.90	4059625231012	238
HG	27636000	286.60	4011097587448	147
HG	27640000	319.70	4011097857022	147
HG	27640400	319.70	4011097857015	147
HG	27645000	434.00	4011097857008	147
HG	27646000	491.20	4011097856988	116
HG	27648000	376.90	4011097856940	117
HG	27648400	376.90	4011097856933	117
HG	27649000	376.90	4011097856926	117
HG	27652000	69.70	4011097607139	137
HG	27653000	120.00	4011097607146	130
HG	27654000	196.60	4059625154908	114
HG	27660000	759.70	4059625196045	258
HG	27667000	203.10	4059625154915	114
HG	27668000	129.90	4059625157077	155
HG	27669000	127.70	4059625157084	155
HG	27671000	374.00	4059625214145	110
HG	27672000	374.00	4059625214152	110
HG	27673000	482.30	4059625214169	111
HG	27674000	482.30	4059625214176	111
HG	27687000	936.30	4059625196038	259
HG	27694000	195.00	4059625261309	215
HG	27694140	292.70	4059625266199	215
HG	27694340	292.70	4059625266175	215
HG	27694670	273.10	4059625266168	215
HG	27694700	273.10	4059625261316	215
HG	27694990	292.70	4059625266182	215
HG	27704000	73.30	4011097710495	150
HG	27717000	92.20	4011097664828	132
HG	27724000	100.20	4011097664835	131
HG	27728000	60.40	4011097664859	137
HG	27729000	63.80	4011097664866	137
HG	27762000	65.00	4011097570181	136
HG	27763000	61.20	4011097570198	136
HG	27764000	67.80	4011097610221	136
HG	27766000	80.50	4011097570204	135
HG	27767000	76.80	4011097570211	135
HG	27771000	115.40	4011097537290	130
HG	27772000	106.40	4011097537405	131
HG	27774000	144.00	4011097537412	130
HG	27776000	116.30	4011097537528	131
HG	27802000	235.20	4011097679600	114
HG	27803000	242.60	4011097679624	114
HG	27803400	242.60	4011097679631	114
HG	27804000	45.00	4059625316320	217
HG	27804670	63.00	4059625326527	217
HG	27805000	60.00	4059625316313	213

brand	code no.	Euro	EAN	page
HG	27805670	84.00	4059625326503	213
HG	27809000	47.00	4059625316306	216
HG	27809670	65.80	4059625326480	216
HG	27812400	218.00	4011097803265	307
HG	27813400	227.40	4011097803272	146
HG	27833400	248.40	4059625039175	143
HG	27856000	236.20	4011097720029	112
HG	27857000	244.10	4011097720005	112
HG	27902670	24.90	4059625352892	554
HG	27902700	24.90	4059625353035	554
HG	27904670	29.90	4059625352885	555
HG	27904700	29.90	4059625353028	555
HG	27912670	18.90	4059625352861	555
HG	27912700	18.90	4059625353004	555
HG	27913670	13.90	4059625352854	556
HG	27913700	13.90	4059625352991	556
HG	27914670	5.90	4059625352847	557
HG	27914700	5.90	4059625352984	557
HG	27915670	24.90	4059625352830	557
HG	27915700	24.90	4059625352977	557
HG	27916670	10.90	4059625352823	556
HG	27916700	10.90	4059625352960	556
HG	27917670	19.90	4059625347331	558
HG	27917700	19.90	4059625347348	558
HG	27921670	18.90	4059625352816	557
HG	27921700	18.90	4059625352953	557
HG	27925670	9.40	4059625352809	556
HG	27925700	9.40	4059625352946	556
HG	27926670	29.90	4059625352793	558
HG	27926700	29.90	4059625352939	558
HG	27927670	38.90	4059625352786	558
HG	27927700	38.90	4059625352922	558
HG	27928670	29.90	4059625352779	558
HG	27928700	29.90	4059625352915	558
HG	27929670	4.90	4059625352762	557
HG	27929700	4.90	4059625352908	557
HG	27939670	2,071.40	4059625321546	194
HG	27951000	1,394.40	4059625341155	198
HG	27952000	1,532.30	4059625341179	193
HG	27953000	1,175.90	4059625341186	206
HG	27954000	1,176.30	4059625341193	207
HG	27957000	632.80	4059625341216	210
HG	27958000	682.10	4059625341223	211
HG	27959670	1,877.90	4059625347157	200
HG	27961670	1,602.20	4059625347164	208
HG	27966670	70.00	4059625368398	559
HG	27966700	70.00	4059625368381	559
HG	27967670	52.80	4059625368374	559
HG	27967700	52.80	4059625368367	559
HG	27968670	63.80	4059625368350	560
HG	27968700	63.80	4059625368336	560
HG	27969670	65.40	4059625368312	560
HG	27969700	65.40	4059625368305	560
HG	27999000	217.80	4011097662268	279
28				
HG	28010000	314.40	4059625203026	593
HG	28010140	471.50	4059625241639	593
HG	28010340	471.50	4059625241622	593
HG	28010670	440.10	4059625241615	593
HG	28010700	440.10	4059625241608	593
HG	28010990	471.50	4059625241592	593
HG	28016000	65.00	4059625206676	594
HG	28020000	314.40	4059625203002	594
HG	28020140	471.50	4059625358849	594

brand	code no.	Euro	EAN	page
HG	28020340	471.50	4059625358856	594
HG	28020670	440.10	4059625310731	594
HG	28020700	440.10	4059625310748	594
HG	28020990	471.50	4059625358863	594
HG	28021000	162.60	4059625206690	595
HG	28071000	28.20	4011097115498	698
HG	28072000	4.40	4011097436920	171
HG	28132000	38.50	4011097557854	170
HG	28134000	42.30	4011097557861	170
HG	28136000	40.30	4011097557847	170
HG	28167000	17.40	4011097796055	171
HG	28168000	18.20	4011097796062	171
HG	28169000	22.90	4011097796079	171
HG	28248000	48.20	4059625024799	170
HG	28249000	46.10	4059625024782	170
HG	28262000	13.90	4011097314044	171
HG	28264000	19.60	4011097314051	171
HG	28266000	14.70	4011097260860	171
HG	28272000	24.80	4011097314013	170
HG	28272140	37.10	4011097838779	170
HG	28272340	37.10	4011097838748	170
HG	28272450	31.10	4011097327099	170
HG	28272670	31.10	4059625302125	170
HG	28272700	31.10	4059625302132	170
HG	28272990	37.10	4011097838984	170
HG	28274000	28.40	4011097314020	170
HG	28276000	26.80	4011097314037	692
HG	28276030	44.90	4011097667164	692
HG	28276090	55.40	4011097327143	692
HG	28276140	40.20	4011097839677	692
HG	28276340	40.20	4011097839639	692
HG	28276430	44.90	4011097667195	692
HG	28276450	33.50	4011097327150	692
HG	28276460	44.90	4011097667201	692
HG	28276480	44.90	4011097667218	692
HG	28276610	44.90	4011097667225	692
HG	28276670	37.50	4059625231029	692
HG	28276700	37.50	4059625231036	692
HG	28276800	40.20	4011097411804	692
HG	28276810	44.90	4011097411828	692
HG	28276880	44.90	4011097327181	692
HG	28276990	40.20	4011097839950	692
HG	28307000	107.40	4011097280011	711
HG	28321000	21.30	4011097116587	163
HG	28324000	29.70	4011097594958	164
HG	28328000	36.70	4011097734514	164
HG	28331000	25.40	4011097487311	163
HG	28331140	38.10	4011097830452	163
HG	28331340	38.10	4011097830421	163
HG	28331670	35.60	4059625273708	163
HG	28331700	35.60	4059625273692	163
HG	28331800	38.10	4011097487335	163
HG	28331990	38.10	4011097830698	163
HG	28335000	36.70	4011097734293	164
HG	28346000	12.20	4011097116969	106
HG	28387000	48.80	4059625214121	163
HG	28387140	73.20	4059625231043	163
HG	28387340	73.20	4059625231050	163
HG	28387670	68.30	4059625231067	163
HG	28387700	68.30	4059625231074	163
HG	28387990	73.20	4059625231081	163
HG	28389000	44.90	4011097254418	711
HG	28412180	122.20	4011097502809	188
HG	28414180	135.50	4011097591766	187

brand	code no.	Euro	EAN	page
HG	28417000	4,341.40	4011097591742	187
HG	28418000	5,177.00	4011097591759	187
HG	28423000	45.60	4011097570136	212
HG	28424000	46.20	4011097570143	212
HG	28425000	57.30	4011097570150	212
HG	28433000	1,386.30	4011097660936	189
HG	28433400	1,386.30	4011097681542	189
HG	28462000	59.50	4011097607184	209
HG	28466000	106.10	4011097192437	219
HG	28467000	122.80	4011097235264	219
HG	28496000	213.50	4011097141909	215
HG	28535000	38.10	4011097537306	102
HG	28536000	67.70	4011097537016	102
HG	28536430	98.10	4011097681160	692
HG	28536450	98.10	4011097681153	692
HG	28536460	98.10	4011097681146	692
HG	28536610	98.10	4011097681115	692
HG	28536710	98.10	4011097681122	692
HG	28536810	98.10	4011097706634	692
HG	28536880	98.10	4011097706641	692
HG	28537000	43.20	4011097537269	102
HG	28538000	72.60	4011097537276	102
HG	28539000	82.50	4011097591469	102
HG	28548000	157.00	4011097610023	98
HG	28548090	196.50	4011097806433	98
HG	28561000	29.70	4011097570105	531
HG	28562000	22.90	4011097570112	104
HG	28563000	40.30	4011097570129	103
HG	28580000	31.10	4011097664804	102
HG	28583000	36.30	4011097664811	102
HG	28585000	18.80	4011097664842	104
HG	28587000	118.20	4011097679327	97
HG	28587400	118.20	4011097679334	97
HG	28588000	118.20	4011097679341	97
HG	28588400	118.20	4011097679358	97
HG	28631000	129.00	4011097487175	149
HG	28631140	193.60	4059625231098	149
HG	28631340	193.60	4059625229606	149
HG	28631670	180.60	4059625231104	149
HG	28631700	180.60	4059625231111	149
HG	28631820	193.60	4011097499574	149
HG	28631990	193.60	4059625231128	149
HG	28632000	120.50	4011097487199	149
HG	28632140	180.80	4059625231135	149
HG	28632340	180.80	4059625231142	149
HG	28632670	168.60	4059625231159	149
HG	28632700	168.60	4059625231166	149
HG	28632990	180.80	4059625231173	149
HG	28650000	17.60	4011097118789	692
HG	28662000	120.90	4011097723709	150
HG	28663000	127.30	4011097723716	150
HG	28672000	28.20	4011097118833	692
HG	28672450	55.40	4011097118857	692
HG	28672880	44.90	4011097151076	692
HG	28675000	28.20	4011097118901	694
HG	28678000	15.70	4011097537283	153
HG	28679000	38.60	4011097487557	153
HG	28684000	15.70	4011097205588	694
HG	28685000	28.20	4011097118970	694
HG	28694000	35.00	4011097591735	147
HG	28698000	79.00	4011097413686	693
HG	28760210	50.00	4059625361337	105
HG	28787640	50.00	4059625361351	106
HG	28788570	50.00	4059625361375	105

brand	code no.	Euro	EAN	page
31				
HG	31015000	261.90	4059625130889	520
HG	31016000	274.50	4059625130872	393
HG	31022000	369.10	4011097576602	394
HG	31023000	356.00	4011097646084	394
HG	31060000	282.60	4011097484006	393
HG	31063000	272.30	4011097719344	521
HG	31068000	269.40	4011097540566	393
HG	31074000	362.10	4011097660950	382
HG	31080000	249.40	4011097660967	382
HG	31081000	322.80	4011097660974	383
HG	31082000	337.20	4011097660981	384
HG	31084000	242.00	4011097661001	382
HG	31085000	315.40	4011097661018	385
HG	31086000	344.60	4011097661025	385
HG	31087000	330.10	4011097651231	383
HG	31088000	234.90	4011097661032	382
HG	31091000	44.90	4011097205564	704
HG	31100000	737.70	4011097519210	395
HG	31101000	680.30	4011097519227	395
HG	31102000	781.90	4011097519234	395
HG	31103000	723.00	4011097519241	395
HG	31121000	253.70	4011097691527	382
HG	31130000	103.90	4011097679396	456
HG	31132000	180.20	4011097678030	452
HG	31159000	347.20	4011097677903	393
HG	31160000	313.90	4011097497419	396
HG	31161000	347.20	4011097641850	393
HG	31162000	350.50	4011097641867	394
HG	31163000	381.10	4011097641874	394
HG	31166000	220.20	4011097661049	384
HG	31171000	505.70	4011097679112	457
HG	31172000	459.10	4011097679129	457
HG	31173000	529.30	4011097679136	457
HG	31174000	506.40	4011097679143	457
HG	31183000	308.30	4011097661056	383
HG	31184000	329.90	4011097692319	384
HG	31185000	300.70	4011097705149	383
HG	31186000	227.20	4011097710402	382
HG	31187000	330.10	4011097674056	383
HG	31190000	778.10	4011097661063	390
HG	31203000	253.70	4011097719337	519
HG	31204000	247.70	4011097719320	520
HG	31251000	304.00	4011097718590	520
HG	31261000	282.60	4011097484013	396
HG	31280000	290.60	4011097661070	386
HG	31285000	311.10	4011097661094	386
HG	31416000	194.10	4011097686486	398
HG	31417000	180.30	4011097686479	398
HG	31422000	390.20	4011097722399	389
HG	31423000	324.30	4011097722702	389
HG	31442000	778.10	4011097661100	390
HG	31443000	605.30	4011097645735	399
HG	31446000	773.10	4011097641126	398
HG	31447000	773.10	4011097712246	398
HG	31451000	352.10	4011097748450	387
HG	31454000	227.20	4011097748443	387
HG	31456000	212.70	4011097748467	391
HG	31460000	368.50	4011097484020	396
HG	31465000	253.60	4011097488547	397
HG	31466000	402.80	4011097488554	397
HG	31471000	1,716.10	4011097760667	386
HG	31480000	324.30	4011097656687	387
HG	31484000	117.30	4011097661117	388

brand	code no.	Euro	EAN	page
HG	31487000	352.10	4011097661124	388
HG	31493000	227.20	4011097661131	388
HG	31494000	217.80	4011097661148	389
HG	31509000	131.70	4011097755847	453
HG	31513000	126.90	4011097719313	453
HG	31515000	321.70	4011097699356	498
HG	31517000	131.70	4011097679402	453
HG	31518000	159.50	4011097679419	454
HG	31519000	194.10	4011097679426	455
HG	31521000	318.40	4011097722900	462
HG	31523000	268.20	4011097722917	462
HG	31531000	197.90	4011097795201	455
HG	31532000	192.20	4011097795218	455
HG	31539000	112.70	4011097734026	452
HG	31603000	133.40	4011097719306	523
HG	31604000	112.70	4011097706160	452
HG	31607000	138.60	4011097679433	453
HG	31608000	166.30	4011097679440	454
HG	31609000	201.00	4011097679457	455
HG	31621000	138.60	4011097691510	453
HG	31652000	212.70	4011097708584	392
HG	31657000	138.60	4011097696089	454
HG	31658000	166.30	4011097696096	454
HG	31660000	282.60	4011097484037	399
HG	31665000	230.00	4011097488585	400
HG	31677000	39.80	4011097665290	330
HG	31680000	274.30	4011097656694	391
HG	31685000	212.70	4011097661155	391
HG	31686000	102.70	4011097661162	392
HG	31730000	112.70	4011097590769	452
HG	31732000	104.90	4011097602424	452
HG	31733000	104.90	4011097590783	452
HG	31741180	124.50	4011097477237	389
HG	31791000	35.00	4011097483535	704
HG	31793000	35.00	4011097506005	704
HG	31803000	300.70	4011097641881	660
HG	31804000	146.10	4011097641898	660
HG	31806000	129.60	4011097641904	660
HG	31806800	168.30	4011097654829	660
HG	31815000	272.90	4011097718187	658
HG	31815670	382.00	4059625231180	658
HG	31815800	354.90	4011097718309	658
HG	31816000	133.70	4011097646312	660
HG	31817000	210.40	4011097718194	659
HG	31817670	294.70	4059625231197	659
HG	31817800	274.10	4011097726717	659
HG	31820000	183.60	4011097679464	659
HG	31820670	257.00	4059625231203	659
HG	31820800	239.50	4011097679471	659
HG	31821000	183.60	4059625196700	659
HG	31821800	239.50	4059625197974	659
HG	31822000	202.70	4011097679488	659
HG	31823000	300.80	4011097708027	659
HG	31825000	174.80	4011097708041	660
HG	31826000	129.60	4059625196694	660
HG	31827000	210.40	4059625196786	659
HG	31833000	272.90	4059625196717	658
HG	31910000	123.70	4011097725819	453
HG	31911000	151.80	4011097725833	524
HG	31913000	158.10	4011097725864	525
HG	31914000	117.40	4011097757421	453
HG	31915000	145.00	4011097757438	524
HG	31916000	127.50	4011097725857	525
HG	31917000	145.00	4011097757445	516
HG	31920000	112.70	4011097591506	457
HG	31922000	112.70	4011097706177	457
HG	31923000	143.90	4011097766072	455
HG	31926000	131.40	4011097646688	458
HG	31927000	158.10	4011097728544	458
HG	31928000	112.70	4011097646329	458
HG	31930000	146.30	4011097629889	461
HG	31931000	136.70	4011097629896	461
HG	31937000	263.80	4011097689739	456
HG	31938000	146.30	4011097646336	461
HG	31940000	138.60	4011097591520	459
HG	31945000	140.40	4011097602523	459
HG	31946000	214.60	4011097602547	459
HG	31947000	51.40	4011097602561	460
HG	31948000	138.60	4011097646343	459
HG	31952000	101.00	4011097719283	523
HG	31960000	116.10	4011097591544	462
HG	31961000	43.80	4059625194195	464
HG	31964000	132.00	4011097708560	463
HG	31965000	132.00	4011097602615	463
HG	31967000	43.80	4011097602653	464
HG	31968000	116.10	4011097646350	462
HG	31971000	112.80	4011097641539	363
HG	31991000	44.90	4011097386836	704
32				
HG	32020000	214.20	4011097397382	446
HG	32031000	205.10	4011097397399	446
HG	32032000	277.80	4011097399287	446
HG	32070000	320.50	4011097473574	446
HG	32092000	44.90	4011097424101	704
HG	32095000	44.90	4011097494470	704
HG	32122000	51.90	4011097722818	107
HG	32127000	49.20	4011097722801	107
HG	32128000	88.30	4011097412863	107
HG	32129000	86.40	4011097617909	107
HG	32420000	271.30	4011097397894	447
HG	32475000	184.50	4011097397962	447
HG	32477000	328.70	4011097399430	447
HG	32498000	127.30	4011097240077	389
HG	32500000	268.30	4011097812786	357
HG	32500140	402.50	4059625229286	357
HG	32500340	402.50	4059625229293	357
HG	32500670	375.70	4059625231210	357
HG	32500700	375.70	4059625231227	357
HG	32500990	402.50	4059625229309	357
HG	32501000	251.20	4011097812762	356
HG	32502000	274.10	4011097812755	357
HG	32503000	279.90	4011097812724	357
HG	32506000	285.60	4011097812687	358
HG	32507000	291.20	4011097812649	358
HG	32507140	436.90	4059625229316	358
HG	32507340	436.90	4059625229330	358
HG	32507670	407.80	4059625212455	358
HG	32507700	407.80	4059625212462	358
HG	32507990	436.90	4059625229347	358
HG	32508000	296.90	4011097812625	358
HG	32511000	399.80	4011097812588	359
HG	32511140	599.60	4059625222539	359
HG	32511340	599.60	4059625222546	359
HG	32511670	559.60	4059625231234	359
HG	32511700	559.60	4059625231241	359
HG	32511990	599.60	4059625222553	359
HG	32512000	411.10	4011097812540	359
HG	32512140	616.60	4059625229354	359

brand	code no.	Euro	EAN	page
HG	32512340	616.60	4059625229378	359
HG	32512670	575.50	4059625231500	359
HG	32512700	575.50	4059625231517	359
HG	32512990	616.60	4059625229385	359
HG	32514000	382.60	4011097810973	363
HG	32515000	399.80	4011097835297	363
HG	32515140	599.60	4059625229392	363
HG	32515340	599.60	4059625229408	363
HG	32515670	559.60	4059625231524	363
HG	32515700	559.60	4059625231531	363
HG	32515990	599.60	4059625229415	363
HG	32520000	376.90	4011097812472	365
HG	32520140	565.40	4059625229446	365
HG	32520340	565.40	4059625229453	365
HG	32520670	527.70	4059625231548	365
HG	32520700	527.70	4059625231555	365
HG	32520990	565.40	4059625229460	365
HG	32522000	382.60	4011097812441	366
HG	32525000	342.60	4011097835280	362
HG	32526000	365.50	4011097835273	362
HG	32526140	548.20	4059625229422	362
HG	32526340	548.20	4059625204672	362
HG	32526670	511.60	4059625231562	362
HG	32526700	511.60	4059625231579	362
HG	32526990	548.20	4059625229439	362
HG	32530000	1,199.20	4011097835266	364
HG	32531000	913.70	4011097835259	371
HG	32532000	1,770.20	4011097835242	367
HG	32532140	2,655.40	4059625229491	367
HG	32532340	2,655.40	4059625229507	367
HG	32532670	2,478.30	4059625231586	367
HG	32532700	2,478.30	4059625231593	367
HG	32532990	2,655.40	4059625229514	367
HG	32540000	354.20	4011097812410	369
HG	32540140	531.20	4059625231708	369
HG	32540340	531.20	4059625229477	369
HG	32540670	495.90	4059625231715	369
HG	32540700	495.90	4059625231722	369
HG	32540990	531.20	4059625231739	369
HG	32542000	228.40	4059625007266	372
HG	32543000	342.60	4011097835235	372
HG	32543140	513.90	4059625231746	372
HG	32543340	513.90	4059625231753	372
HG	32543670	479.60	4059625231760	372
HG	32543700	479.60	4059625231777	372
HG	32543990	513.90	4059625231784	372
HG	32545000	239.90	4011097826097	370
HG	32545140	359.80	4059625231791	370
HG	32545340	359.80	4059625229484	370
HG	32545670	335.90	4059625231807	370
HG	32545700	335.90	4059625231814	370
HG	32545990	359.80	4059625231821	370
HG	32546000	342.60	4011097826073	370
HG	32546140	513.90	4059625231838	370
HG	32546340	513.90	4059625231845	370
HG	32546670	479.60	4059625231852	370
HG	32546700	479.60	4059625231869	370
HG	32546990	513.90	4059625231876	370
HG	32548000	285.60	4011097835228	372
HG	32550000	685.20	4011097835211	373
HG	32551000	514.00	4011097835204	375
HG	32552000	685.20	4011097835198	376
HG	32553000	514.00	4011097835181	377
HG	32560000	239.90	4011097812373	378
HG	32560140	359.80	4059625241585	378
HG	32560340	359.80	4059625241578	378
HG	32560670	335.90	4059625241561	378
HG	32560700	335.90	4059625241554	378
HG	32560990	359.80	4059625241547	378
HG	32565000	222.80	4011097826066	379
HG	32565140	334.10	4059625231883	379
HG	32565340	334.10	4059625231890	379
HG	32565670	311.90	4059625231906	379
HG	32565700	311.90	4059625231913	379
HG	32565990	334.10	4059625231920	379
HG	32570000	319.70	4011097812335	356
HG	32571000	331.30	4011097812304	356
HG	32572000	456.90	4011097812274	356
HG	32620000	216.70	4011097399423	448
HG	32675000	172.00	4011097398006	449
HG	32698000	98.10	4011097240534	392
HG	32841000	355.00	4011097521565	652
HG	32842000	378.40	4011097523071	653
HG	32845000	355.00	4059625195956	652
HG	32851000	253.50	4011097521558	653
HG	32857000	253.50	4059625195987	653
33				
HG	33091000	44.90	4011097236018	704
HG	33891000	44.90	4011097362304	704
35				
AX	35891800	127.30	4011097238678	705
AX	35893800	196.30	4011097363301	706
36				
AX	36391000	78.90	4011097233413	705
AX	36991000	44.90	4011097233338	706
40				
HG	40068000	17.60	4011097218939	544
HG	40088000	17.60	4011097120461	543
HG	40089000	55.40	4011097147208	543
HG	40418000	108.90	4011097191669	688
HG	40418800	163.40	4011097304342	688
HG	40438000	61.00	4059625131589	688
HG	40438340	88.30	4059625297469	688
HG	40438670	82.40	4059625297452	688
HG	40438800	79.40	4059625131596	688
HG	40448000	83.30	4059625131602	688
HG	40448670	112.40	4059625297445	688
HG	40448800	108.20	4059625131619	688
HG	40468000	83.30	4059625131626	688
HG	40468670	112.40	4059625297438	688
HG	40468800	108.20	4059625131633	688
HG	40511000	18.40	4011097584805	542
HG	40511820	27.60	4011097585246	542
HG	40512000	91.70	4011097584584	542
HG	40512820	137.60	4011097585284	542
HG	40513000	91.70	4011097584812	542
HG	40513820	137.60	4011097585222	542
HG	40514000	122.30	4011097584829	541
HG	40514820	183.40	4011097585314	541
HG	40515000	76.70	4011097584843	542
HG	40515820	115.20	4011097585291	542
HG	40516000	107.10	4011097584591	542
HG	40516820	160.60	4011097585239	542
HG	40517000	61.20	4011097584836	543
HG	40517820	91.90	4011097585338	543
HG	40518000	76.70	4011097584881	541
HG	40518820	115.20	4011097585307	541
HG	40522000	137.60	4011097584850	543

brand	code no.	Euro	EAN	page
HG	40522820	206.50	4011097585321	543
HG	40523000	76.70	4011097584874	542
HG	40523820	115.20	4011097585253	542
HG	40526000	61.20	4011097585260	543
HG	40526820	91.90	4011097585277	543
HG	40952800	12.60	4059625027134	687
HG	40953670	32.10	4059625325148	687
HG	40953800	18.30	4059625027141	687
HG	40960000	133.20	4059625175194	689
HG	40961000	100.00	4059625175200	689
HG	40962800	86.70	4059625189276	689
HG	40963000	21.70	4059625189269	689
41				
HG	41710000	27.70	4059625123140	551
HG	41711000	8.40	4059625123089	552
HG	41712000	55.50	4059625123010	552
HG	41713000	44.40	4059625123102	551
HG	41714000	38.80	4059625123133	551
HG	41715000	27.70	4059625123058	551
HG	41716000	44.40	4059625123003	551
HG	41717000	27.70	4059625123126	553
HG	41718000	27.70	4059625123041	551
HG	41720000	77.70	4059625123027	552
HG	41722000	38.80	4059625123034	553
HG	41723000	38.80	4059625123119	552
HG	41724000	27.70	4059625123065	552
HG	41725000	16.70	4059625123096	552
HG	41726000	27.70	4059625123072	553
HG	41727000	122.10	4059625131374	554
HG	41728000	199.70	4059625131381	554
HG	41741000	36.70	4059625296868	544
HG	41741140	55.00	4059625296851	544
HG	41741340	58.70	4059625296844	544
HG	41741670	51.40	4059625296837	544
HG	41741700	51.40	4059625296820	544
HG	41741990	55.00	4059625296813	544
HG	41742000	9.20	4059625296325	544
HG	41742140	13.80	4059625296318	544
HG	41742340	14.70	4059625296301	544
HG	41742670	12.80	4059625296295	544
HG	41742700	12.80	4059625296288	544
HG	41742990	13.80	4059625296271	544
HG	41743000	68.30	4059625296264	545
HG	41743140	102.40	4059625296257	545
HG	41743340	109.20	4059625296240	545
HG	41743670	95.60	4059625296233	545
HG	41743700	95.60	4059625296226	545
HG	41743990	102.40	4059625296219	545
HG	41744000	51.00	4059625296806	546
HG	41744140	76.40	4059625296790	546
HG	41744340	81.50	4059625296783	546
HG	41744670	71.30	4059625296776	546
HG	41744700	71.30	4059625296769	546
HG	41744990	76.40	4059625296752	546
HG	41745000	44.80	4059625296561	548
HG	41745140	67.30	4059625296554	548
HG	41745340	71.70	4059625296547	548
HG	41745670	62.80	4059625296530	548
HG	41745700	62.80	4059625296523	548
HG	41745990	67.30	4059625296516	548
HG	41746000	31.60	4059625297131	548
HG	41746140	47.40	4059625297124	548
HG	41746340	50.50	4059625297117	548
HG	41746670	44.20	4059625297100	548

brand	code no.	Euro	EAN	page
HG	41746700	44.20	4059625297094	548
HG	41746990	47.40	4059625297087	548
HG	41747000	51.00	4059625296202	545
HG	41747140	76.40	4059625296196	545
HG	41747340	81.50	4059625296189	545
HG	41747670	71.30	4059625296172	545
HG	41747700	71.30	4059625296165	545
HG	41747990	76.40	4059625296158	545
HG	41748000	31.60	4059625297377	547
HG	41748140	47.40	4059625297360	547
HG	41748340	50.50	4059625297353	547
HG	41748670	44.20	4059625297346	547
HG	41748700	44.20	4059625297339	547
HG	41748990	47.40	4059625297322	547
HG	41749000	31.60	4059625297070	548
HG	41749140	47.40	4059625297063	548
HG	41749340	50.50	4059625297056	548
HG	41749670	44.20	4059625297049	548
HG	41749700	44.20	4059625297032	548
HG	41749990	47.40	4059625297025	548
HG	41751000	142.70	4059625296745	545
HG	41751140	214.00	4059625296738	545
HG	41751340	228.30	4059625296721	545
HG	41751670	199.70	4059625296714	545
HG	41751700	199.70	4059625296707	545
HG	41751990	214.00	4059625296691	545
HG	41752000	44.80	4059625296509	548
HG	41752140	67.30	4059625296493	548
HG	41752340	71.70	4059625296486	548
HG	41752670	62.80	4059625296479	548
HG	41752700	62.80	4059625296462	548
HG	41752990	67.30	4059625296455	548
HG	41753000	49.90	4059625297018	547
HG	41753140	74.90	4059625297001	547
HG	41753340	79.90	4059625296998	547
HG	41753670	69.90	4059625296981	547
HG	41753700	69.90	4059625296974	547
HG	41753990	74.90	4059625296967	547
HG	41754000	31.60	4059625296141	546
HG	41754140	47.40	4059625296134	546
HG	41754340	50.50	4059625296127	546
HG	41754670	44.20	4059625296110	546
HG	41754700	44.20	4059625296103	546
HG	41754990	47.40	4059625295892	546
HG	41755000	19.40	4059625297315	544
HG	41755140	29.00	4059625297308	544
HG	41755340	31.00	4059625297292	544
HG	41755670	27.10	4059625297285	544
HG	41755700	27.10	4059625297278	544
HG	41755990	29.00	4059625297261	544
HG	41756000	31.60	4059625296950	547
HG	41756140	47.40	4059625296943	547
HG	41756340	50.50	4059625296936	547
HG	41756670	44.20	4059625296929	547
HG	41756700	44.20	4059625296912	547
HG	41756990	47.40	4059625296905	547
HG	41759000	68.30	4059625297254	546
HG	41759140	102.40	4059625297247	546
HG	41759340	109.20	4059625297230	546
HG	41759670	95.60	4059625297223	546
HG	41759700	95.60	4059625297216	546
HG	41759990	102.40	4059625297209	546
HG	41770000	51.00	4059625297193	545
HG	41770140	76.40	4059625297186	545

brand	code no.	Euro	EAN	page
HG	41770340	81.50	4059625297179	545
HG	41770670	71.30	4059625297162	545
HG	41770700	71.30	4059625297155	545
HG	41770990	76.40	4059625297148	545
HG	41771000	35.70	4059625296448	546
HG	41771140	53.50	4059625296431	546
HG	41771340	57.10	4059625296424	546
HG	41771670	49.90	4059625296417	546
HG	41771700	49.90	4059625296400	546
HG	41771990	53.50	4059625296394	546
HG	41772000	42.80	4059625296684	547
HG	41772140	64.20	4059625296677	547
HG	41772340	68.50	4059625296660	547
HG	41772670	59.90	4059625296653	547
HG	41772700	59.90	4059625296646	547
HG	41772990	64.20	4059625296639	547
HG	41773000	22.40	4059625296387	549
HG	41773140	33.60	4059625296370	549
HG	41773340	35.90	4059625296363	549
HG	41773670	31.40	4059625296356	549
HG	41773700	31.40	4059625296349	549
HG	41773990	33.60	4059625296332	549
HG	41774000	48.90	4059625296622	549
HG	41774140	73.40	4059625296615	549
HG	41774340	78.30	4059625296608	549
HG	41774670	68.50	4059625296592	549
HG	41774700	68.50	4059625296585	549
HG	41774990	73.40	4059625296578	549
HG	41775000	48.90	4059625296899	549
HG	41775670	68.50	4059625296882	549
HG	41775700	68.50	4059625296875	549
HG	41790000	155.90	4059625321683	550
HG	41790140	233.90	4059625321911	550
HG	41790340	249.50	4059625321690	550
HG	41790670	218.30	4059625321935	550
HG	41790700	218.30	4059625321928	550
HG	41790990	233.90	4059625321904	550
HG	41791000	76.40	4059625321942	550
HG	41791140	149.10	4059625321973	550
HG	41791340	159.00	4059625321959	550
HG	41791670	107.00	4059625321997	550
HG	41791700	107.00	4059625321980	550
HG	41791990	149.10	4059625321966	550
43				
HG	43201000	1,127.40	4059625006887	673
HG	43201800	1,296.60	4059625025413	673
HG	43202000	1,217.60	4059625007006	676
HG	43202800	1,386.80	4059625025505	676
HG	43203000	1,691.00	4059625007020	678
HG	43203800	1,860.30	4059625025499	678
HG	43205000	1,424.40	4059625006894	674
HG	43205800	1,588.60	4059625025482	674
HG	43206000	1,578.40	4059625007013	677
HG	43206800	1,747.60	4059625025475	677
HG	43217000	843.60	4059625100509	679
HG	43218000	920.40	4059625100493	682
HG	43219000	1,008.00	4059625100486	680
HG	43220000	942.20	4059625100479	683
HG	43221000	1,008.00	4059625100462	684
HG	43228000	1,008.00	4059625173589	681
HG	43230000	1,424.40	4059625177839	675
HG	43230800	1,588.60	4059625177846	675
HG	43301800	653.90	4059625007082	606
HG	43302800	710.30	4059625007129	609

brand	code no.	Euro	EAN	page
HG	43303800	1,217.60	4059625007167	611
HG	43305800	653.90	4059625007099	606
HG	43306800	931.30	4059625007105	607
HG	43307800	931.30	4059625007112	607
HG	43308800	710.30	4059625007136	609
HG	43309800	1,104.80	4059625007143	610
HG	43310800	1,104.80	4059625007150	610
HG	43311800	1,217.60	4059625007174	611
HG	43312170	303.20	4059625104781	618
HG	43312290	303.20	4059625104774	618
HG	43312380	303.20	4059625104767	618
HG	43313170	387.00	4059625104750	619
HG	43313290	387.00	4059625104743	619
HG	43313380	387.00	4059625104736	619
HG	43314170	470.90	4059625104729	618
HG	43314290	470.90	4059625104712	618
HG	43314380	470.90	4059625104705	618
HG	43315170	387.00	4059625104699	620
HG	43315290	387.00	4059625104682	620
HG	43315380	387.00	4059625104941	620
HG	43316170	451.60	4059625104934	620
HG	43316290	451.60	4059625104927	620
HG	43316380	451.60	4059625104910	620
HG	43330170	470.90	4059625173572	619
HG	43330290	470.90	4059625173565	619
HG	43330380	470.90	4059625173558	619
HG	43331800	931.30	4059625177792	608
HG	43332800	931.30	4059625177808	608
HG	43333000	22.90	4059625024003	687
HG	43334800	256.80	4059625217511	617
HG	43335800	267.50	4059625217504	617
HG	43336800	278.20	4059625217498	617
HG	43337800	363.80	4059625217481	615
HG	43338800	385.20	4059625217474	616
HG	43339800	438.70	4059625217467	616
HG	43340800	342.40	4059625217450	615
HG	43341800	363.80	4059625217443	615
HG	43342800	417.30	4059625217436	616
HG	43425800	451.00	4059625007181	612
HG	43426800	484.80	4059625007198	612
HG	43427800	507.40	4059625007204	613
HG	43428800	529.90	4059625007211	613
HG	43429800	890.60	4059625007228	614
HG	43430800	969.50	4059625007235	614
HG	43431170	373.10	4059625104903	621
HG	43431290	373.10	4059625104897	621
HG	43431380	373.10	4059625104880	621
HG	43432170	457.00	4059625104873	621
HG	43432290	457.00	4059625104866	621
HG	43432380	457.00	4059625104859	621
HG	43433170	457.00	4059625104842	622
HG	43433290	457.00	4059625104835	622
HG	43433380	457.00	4059625104828	622
HG	43434170	521.40	4059625104811	622
HG	43434290	521.40	4059625104804	622
HG	43434380	521.40	4059625104798	622
HG	43921800	26.80	4059625248737	685
HG	43922800	44.60	4059625248720	685
HG	43927000	26.70	4059625105009	686
HG	43928000	44.40	4059625104996	686
HG	43931800	46.90	4059625248713	685
HG	43932800	72.60	4059625248706	685
HG	43937000	46.70	4059625104989	686
HG	43938000	72.30	4059625104972	686

brand	code no.	Euro	EAN	page
50				
HG	50001000	37.80	4011097146867	598
HG	50100000	58.90	4011097369495	597
HG	50100140	88.40	4011097820125	597
HG	50100340	88.40	4011097820101	597
HG	50100670	82.40	4059625266113	597
HG	50100700	82.40	4059625266120	597
HG	50100990	88.40	4011097820286	597
HG	50105000	25.10	4011097716282	598
HG	50107000	58.10	4011097664323	595
52				
HG	52010000	34.70	4011097123349	600
HG	52053000	24.70	4011097123431	600
HG	52100000	137.30	4011097346199	598
HG	52105000	77.10	4011097440804	598
HG	52105140	115.60	4059625001400	598
HG	52105340	115.60	4059625001370	598
HG	52105670	107.90	4059625240182	598
HG	52105700	107.90	4059625240199	598
HG	52105990	115.60	4059625001707	598
HG	52120000	196.70	4011097369563	598
53				
HG	53002000	19.10	4011097123912	600
HG	53010000	25.00	4011097123936	600
HG	53428000	13.30	4011097124070	601
HG	53428670	18.70	4059625346747	601
HG	53428700	18.70	4059625346754	601
HG	53493000	23.60	4011097124193	601
HG	53493670	33.10	4059625315149	601
HG	53493700	33.10	4059625315132	601
HG	53555000	24.20	4011097124308	601
HG	53646000	51.50	4011097124384	601
HG	53971000	2.50	4011097124872	710
HG	53985000	2.50	4011097124988	710
HG	53990000	22.60	4011097125008	602
55				
HG	55213000	32.80	4011097125121	600
HG	55237000	25.40	4011097125138	601
56				
HG	56010180	213.00	4059625355589	570
HG	56011180	215.00	4059625355572	570
HG	56012180	219.00	4059625355565	570
HG	56013180	225.00	4059625355558	570
HG	56014180	233.00	4059625355541	570
HG	56015180	247.00	4059625355534	570
HG	56016180	373.00	4059625355527	569
HG	56017180	375.00	4059625355510	569
HG	56018180	379.00	4059625355503	569
HG	56019180	385.00	4059625355497	569
HG	56020180	393.00	4059625355480	569
HG	56021180	407.00	4059625355473	569
HG	56022180	373.00	4059625355466	568
HG	56023180	375.00	4059625355459	568
HG	56024180	379.00	4059625355442	568
HG	56025180	385.00	4059625355435	568
HG	56026180	393.00	4059625355428	568
HG	56027180	407.00	4059625355411	568
HG	56029000	125.00	4059625350621	585
HG	56030000	131.00	4059625350614	585
HG	56031000	148.00	4059625350607	586
HG	56032000	151.00	4059625350591	586
HG	56033000	157.00	4059625350584	587
HG	56034000	180.00	4059625350577	587
HG	56036000	254.00	4059625350553	579

brand	code no.	Euro	EAN	page
HG	56036450	406.00	4059625360989	579
HG	56036610	406.00	4059625360972	579
HG	56036670	372.00	4059625350515	579
HG	56036700	372.00	4059625350508	579
HG	56036800	169.00	4059625355398	579
HG	56037000	270.00	4059625350492	580
HG	56037450	432.00	4059625360965	580
HG	56037610	432.00	4059625360958	580
HG	56037670	396.00	4059625350454	580
HG	56037700	396.00	4059625350447	580
HG	56037800	180.00	4059625355381	580
HG	56038000	281.00	4059625350430	581
HG	56038450	449.00	4059625360941	581
HG	56038610	449.00	4059625360934	581
HG	56038670	411.00	4059625350393	581
HG	56038700	411.00	4059625350386	581
HG	56038800	187.00	4059625355374	581
HG	56040000	290.00	4059625350362	582
HG	56040450	463.00	4059625360927	582
HG	56040610	463.00	4059625360910	582
HG	56040670	425.00	4059625350324	582
HG	56040700	425.00	4059625350317	582
HG	56040800	193.00	4059625355367	582
HG	56041000	296.00	4059625350300	583
HG	56041450	473.00	4059625360903	583
HG	56041610	473.00	4059625360897	583
HG	56041670	433.00	4059625350263	583
HG	56041700	433.00	4059625350256	583
HG	56041800	197.00	4059625355350	583
HG	56042000	321.00	4059625350249	584
HG	56042450	514.00	4059625360880	584
HG	56042610	514.00	4059625360873	584
HG	56042670	471.00	4059625350201	584
HG	56042700	471.00	4059625350195	584
HG	56042800	214.00	4059625355343	584
HG	56043000	389.00	4059625350188	571
HG	56043140	478.00	4059625350171	571
HG	56043340	478.00	4059625350164	571
HG	56043670	389.00	4059625350157	571
HG	56043700	389.00	4059625350140	571
HG	56043800	278.00	4059625350133	571
HG	56043990	478.00	4059625350126	571
HG	56044000	399.00	4059625350119	571
HG	56044140	490.00	4059625350102	571
HG	56044340	490.00	4059625350096	571
HG	56044670	399.00	4059625350089	571
HG	56044700	399.00	4059625350072	571
HG	56044800	285.00	4059625350065	571
HG	56044990	490.00	4059625350058	571
HG	56045000	434.00	4059625350041	572
HG	56045140	533.00	4059625350034	572
HG	56045340	533.00	4059625350027	572
HG	56045670	434.00	4059625350010	572
HG	56045700	434.00	4059625350003	572
HG	56045800	310.00	4059625349991	572
HG	56045990	533.00	4059625349984	572
HG	56046000	445.00	4059625349977	572
HG	56046140	547.00	4059625349960	572
HG	56046340	547.00	4059625349953	572
HG	56046670	445.00	4059625349946	572
HG	56046700	445.00	4059625349939	572
HG	56046800	318.00	4059625349922	572
HG	56046990	547.00	4059625349915	572
HG	56047000	479.00	4059625349908	573

brand	code no.	Euro	EAN	page
HG	56047140	588.00	4059625349892	573
HG	56047340	588.00	4059625349885	573
HG	56047670	479.00	4059625349878	573
HG	56047700	479.00	4059625349861	573
HG	56047800	342.00	4059625349854	573
HG	56047990	588.00	4059625349847	573
HG	56050000	389.00	4059625349816	574
HG	56050140	478.00	4059625349809	574
HG	56050340	478.00	4059625349793	574
HG	56050670	389.00	4059625349786	574
HG	56050700	389.00	4059625349779	574
HG	56050800	278.00	4059625349762	574
HG	56050990	478.00	4059625349755	574
HG	56051000	399.00	4059625349748	575
HG	56051140	490.00	4059625349731	575
HG	56051340	490.00	4059625349724	575
HG	56051670	399.00	4059625349717	575
HG	56051700	399.00	4059625349700	575
HG	56051800	285.00	4059625349694	575
HG	56051990	490.00	4059625349687	575
HG	56052000	434.00	4059625349670	576
HG	56052140	533.00	4059625349663	576
HG	56052340	533.00	4059625349656	576
HG	56052670	434.00	4059625349649	576
HG	56052700	434.00	4059625349632	576
HG	56052800	310.00	4059625349625	576
HG	56052990	533.00	4059625349618	576
HG	56053000	445.00	4059625349601	577
HG	56053140	547.00	4059625349595	577
HG	56053340	547.00	4059625349588	577
HG	56053670	445.00	4059625349571	577
HG	56053700	445.00	4059625349564	577
HG	56053800	318.00	4059625349557	577
HG	56053990	547.00	4059625349540	577
HG	56054000	479.00	4059625349533	578
HG	56054140	588.00	4059625349526	578
HG	56054340	588.00	4059625349519	578
HG	56054670	479.00	4059625349502	578
HG	56054700	479.00	4059625349496	578
HG	56054800	342.00	4059625349489	578
HG	56054990	588.00	4059625349472	578
HG	56055800	107.00	4059625349465	588
HG	56056000	20.00	4059625349441	589
HG	56057670	346.00	4059625351598	538
HG	56057700	346.00	4059625351581	538
HG	56057800	346.00	4059625351574	538
HG	56061670	393.00	4059625351567	538
HG	56061700	393.00	4059625351550	538
HG	56061800	393.00	4059625351543	538
HG	56064670	504.00	4059625351536	538
HG	56064700	504.00	4059625351529	538
HG	56064800	504.00	4059625351512	538
HG	56067670	605.00	4059625351505	538
HG	56067700	605.00	4059625351499	538
HG	56067800	605.00	4059625351482	538
HG	56070670	297.00	4059625351475	538
HG	56070700	297.00	4059625351468	538
HG	56070800	297.00	4059625351451	538
HG	56073670	343.00	4059625351444	538
HG	56073700	343.00	4059625351437	538
HG	56073800	343.00	4059625351420	538
HG	56076670	313.00	4059625351413	538
HG	56076700	313.00	4059625351406	538
HG	56076800	313.00	4059625351390	538

brand	code no.	Euro	EAN	page
HG	56079670	363.00	4059625351383	538
HG	56079700	363.00	4059625351376	538
HG	56079800	363.00	4059625351369	538
HG	56082670	379.00	4059625351352	539
HG	56082700	379.00	4059625351345	539
HG	56082800	379.00	4059625351338	539
HG	56085670	426.00	4059625351321	539
HG	56085700	426.00	4059625351314	539
HG	56085800	426.00	4059625351307	539
HG	56088670	399.00	4059625351291	539
HG	56088700	399.00	4059625351284	539
HG	56088800	399.00	4059625351277	539
HG	56091670	449.00	4059625351260	539
HG	56091700	449.00	4059625351253	539
HG	56091800	449.00	4059625351246	539
HG	56094140	422.00	4059625349069	539
HG	56094340	422.00	4059625349052	539
HG	56094670	413.00	4059625349045	539
HG	56094700	413.00	4059625349038	539
HG	56094800	380.00	4059625349021	539
HG	56094990	422.00	4059625349014	539
HG	56095140	422.00	4059625349007	540
HG	56095340	422.00	4059625348994	540
HG	56095670	413.00	4059625348987	540
HG	56095700	413.00	4059625348970	540
HG	56095800	380.00	4059625348963	540
HG	56095990	422.00	4059625348956	540
HG	56096140	422.00	4059625348949	540
HG	56096340	422.00	4059625348932	540
HG	56096670	413.00	4059625348925	540
HG	56096700	413.00	4059625348918	540
HG	56096800	380.00	4059625348901	540
HG	56096990	422.00	4059625348895	540
HG	56097140	477.00	4059625348888	539
HG	56097340	477.00	4059625348871	539
HG	56097670	468.00	4059625348864	539
HG	56097700	468.00	4059625348857	539
HG	56097800	432.00	4059625348840	539
HG	56097990	477.00	4059625348833	539
HG	56098140	477.00	4059625348826	540
HG	56098340	477.00	4059625348819	540
HG	56098670	468.00	4059625348802	540
HG	56098700	468.00	4059625348796	540
HG	56098800	432.00	4059625348789	540
HG	56098990	477.00	4059625348772	540
HG	56099140	477.00	4059625348765	540
HG	56099340	477.00	4059625348758	540
HG	56099670	468.00	4059625348741	540
HG	56099700	468.00	4059625348734	540
HG	56099800	432.00	4059625348727	540
HG	56099990	477.00	4059625348710	540
HG	56100800	350.00	4059625351239	541
HG	56112800	107.00	4059625348697	588
HG	56373000	13.00	4011097125282	597
58				
HG	58112000	89.20	4011097651804	590
HG	58113000	249.70	4011097423913	593
HG	58115180	113.50	4011097433103	592
HG	58116180	159.20	4011097433110	592
HG	58117000	164.80	4011097417479	590
HG	58117140	247.20	4059625003732	590
HG	58117340	247.20	4059625002599	590
HG	58117670	230.70	4059625235683	590
HG	58117700	230.70	4059625235676	590

brand	code no.	Euro	EAN	page
HG	58117820	247.20	4011097516615	590
HG	58117990	247.20	4059625004050	590
HG	58123000	277.40	4011097363363	591
HG	58125180	123.60	4011097140223	591
HG	58126180	173.30	4011097140230	591
HG	58127000	179.30	4011097140247	590
HG	58128000	212.70	4011097140353	590
HG	58140180	49.50	4011097233543	596
HG	58141180	76.30	4011097233574	596
HG	58142000	70.40	4011097233598	596
HG	58143000	70.40	4011097232874	597
HG	58150000	83.00	4011097492650	597
HG	58185000	22.30	4011097233581	595
HG	58185140	33.40	4059625243985	595
HG	58185340	33.40	4059625243992	595
HG	58185670	31.20	4059625244203	595
HG	58185700	31.20	4059625244210	595
HG	58185990	33.40	4059625178706	595
HG	58186000	34.10	4011097440347	595
HG	58192000	109.70	4011097412955	593
60				
HG	60056000	58.50	4011097609751	589
HG	60067000	71.50	4011097557694	589
71				
HG	71070000	81.90	4011097738710	490
HG	71071000	76.10	4011097738703	490
HG	71072000	81.90	4011097738697	490
HG	71073000	76.10	4011097738680	490
HG	71074000	158.10	4011097738673	491
HG	71075000	81.90	4011097738666	491
HG	71076000	76.10	4011097738659	491
HG	71077000	81.90	4011097738642	490
HG	71078000	81.90	4011097753812	523
HG	71090000	134.60	4011097738628	493
HG	71091000	128.70	4011097738611	493
HG	71095000	134.60	4011097738604	493
HG	71100000	105.40	4011097738581	491
HG	71101000	99.60	4011097738574	491
HG	71102000	105.40	4011097738567	492
HG	71103000	99.60	4011097738550	492
HG	71104000	105.40	4011097753829	524
HG	71105000	105.40	4011097738543	492
HG	71107000	105.40	4011097738529	491
HG	71120000	70.20	4011097738499	495
HG	71130000	169.70	4011097738482	494
HG	71131000	164.00	4011097738475	494
HG	71133000	210.70	4011097738468	496
HG	71170000	93.30	4011097783475	490
HG	71171000	116.80	4011097783482	491
HG	71200000	111.20	4011097738444	497
HG	71201000	109.00	4059625395318	497
HG	71203000	95.80	4059625076873	497
HG	71204000	87.70	4011097753836	497
HG	71210000	74.10	4059625321461	472
HG	71210670	103.70	4059625326466	472
HG	71211000	87.00	4059625325346	483
HG	71211670	121.80	4059625326459	483
HG	71214000	138.20	4059625325544	473
HG	71215000	100.90	4059625329955	469
HG	71216000	120.80	4059625329962	481
HG	71220000	158.10	4011097738420	495
HG	71221000	99.60	4011097738413	495
HG	71222000	105.40	4011097738406	495
HG	71225000	117.10	4011097769981	494

brand	code no.	Euro	EAN	page
HG	71243000	134.60	4011097768243	499
HG	71251000	109.00	4059625356210	492
HG	71252000	109.00	4059625356180	492
HG	71253000	103.00	4059625356173	492
HG	71254000	109.00	4059625356135	493
HG	71255000	103.00	4059625356128	493
HG	71256000	164.00	4059625356111	496
HG	71257000	169.00	4059625356067	494
HG	71258000	164.00	4059625356036	494
HG	71263000	111.20	4011097768250	504
HG	71280000	130.40	4011097741451	668
HG	71283000	166.10	4059625215531	670
HG	71284000	195.80	4059625215555	670
HG	71285000	166.10	4011097738369	670
HG	71286000	195.80	4011097754024	670
HG	71287000	195.80	4011097754017	670
HG	71290000	128.80	4011097738352	498
HG	71310000	468.20	4011097738338	501
HG	71311000	114.60	4011097738321	501
HG	71312000	125.20	4011097738314	501
HG	71313000	326.00	4011097738307	502
HG	71314000	326.00	4011097738291	503
HG	71315000	125.20	4011097738284	501
HG	71400000	117.10	4011097738260	498
HG	71401000	117.10	4011097738253	498
HG	71402000	160.10	4011097789507	499
HG	71405000	123.00	4011097738246	499
HG	71406000	43.80	4011097738239	500
HG	71407000	193.10	4011097769967	499
HG	71409000	165.30	4059625062463	500
HG	71410000	92.10	4011097738222	429
HG	71420000	75.00	4059625316290	475
HG	71420670	105.00	4059625326442	475
HG	71430000	123.00	4011097738215	498
HG	71440000	98.00	4059625316283	473
HG	71440670	137.20	4059625326428	473
HG	71442000	168.00	4059625325353	475
HG	71442670	235.20	4059625326381	475
HG	71443000	127.70	4059625325391	476
HG	71444000	136.60	4059625325506	476
HG	71446000	136.60	4059625325513	476
HG	71447000	576.00	4059625325612	473
HG	71449000	35.00	4059625325438	474
HG	71449670	49.00	4059625326374	474
HG	71450000	117.00	4059625316269	483
HG	71450670	163.80	4059625326350	483
HG	71452000	201.60	4059625325377	486
HG	71452670	282.20	4059625326312	486
HG	71453000	117.00	4059625316245	483
HG	71454000	98.00	4059625316238	473
HG	71456000	250.00	4059625328583	475
HG	71456670	350.00	4059625330036	475
HG	71457000	688.00	4059625325650	484
HG	71458000	38.00	4059625325322	485
HG	71458670	53.20	4059625326305	485
HG	71459000	250.00	4059625328590	485
HG	71459670	350.00	4059625338872	485
HG	71460000	75.00	4059625316221	485
HG	71460670	105.00	4059625326282	485
HG	71461000	201.60	4059625325360	476
HG	71461670	282.20	4059625330043	476
HG	71462000	241.90	4059625325384	486
HG	71462670	338.70	4059625330050	486
HG	71463000	153.20	4059625325520	487

brand	code no.	Euro	EAN	page
HG	71464000	153.20	4059625325537	487
HG	71466000	98.00	4059625363713	474
HG	71466670	137.20	4059625363706	474
HG	71467000	130.00	4059625363690	474
HG	71467670	182.00	4059625363683	474
HG	71468000	112.70	4059625363676	484
HG	71468670	157.80	4059625363669	484
HG	71469000	149.40	4059625363652	484
HG	71469670	209.20	4059625363645	484
HG	71474000	271.10	4011097778563	428
HG	71474140	406.60	4059625231982	428
HG	71474340	406.60	4059625229583	428
HG	71474670	379.40	4059625231999	428
HG	71474700	379.40	4059625232002	428
HG	71474990	406.60	4059625232019	428
HG	71501000	238.90	4059625353370	471
HG	71502000	217.20	4059625353363	471
HG	71503000	181.00	4059625353356	472
HG	71504000	199.10	4059625353349	472
HG	71550000	67.10	4059625316214	466
HG	71550670	93.90	4059625326268	466
HG	71551000	87.70	4059625316207	466
HG	71551670	121.90	4059625326244	466
HG	71552000	115.00	4059625316191	467
HG	71552670	161.00	4059625326220	467
HG	71553000	170.00	4059625325407	469
HG	71553670	238.00	4059625326190	469
HG	71554000	140.00	4059625325414	469
HG	71557000	77.10	4059625316184	466
HG	71558000	60.10	4059625316177	466
HG	71558670	84.10	4059625326169	466
HG	71559000	97.70	4059625316160	466
HG	71560000	80.00	4059625321454	479
HG	71560670	112.00	4059625326152	479
HG	71561000	105.00	4059625321447	480
HG	71561670	147.00	4059625326138	480
HG	71562000	137.00	4059625321430	481
HG	71562670	191.80	4059625326114	481
HG	71563000	170.00	4059625325476	482
HG	71563670	238.00	4059625326084	482
HG	71564000	167.00	4059625325483	482
HG	71566000	90.00	4059625321423	479
HG	71567000	73.00	4059625325445	479
HG	71567670	102.20	4059625326046	479
HG	71568000	115.00	4059625321416	480
HG	71569000	98.00	4059625325452	480
HG	71569670	137.20	4059625326015	480
HG	71570000	67.10	4059625324974	467
HG	71571000	87.70	4059625324981	468
HG	71572000	115.00	4059625324998	468
HG	71576000	120.00	4059625325421	470
HG	71576670	168.00	4059625325933	470
HG	71578000	130.00	4059625325315	482
HG	71578670	182.00	4059625325919	482
HG	71580000	80.70	4059625316153	466
HG	71580670	113.00	4059625325896	466
HG	71581000	125.00	4059625316146	467
HG	71582000	108.00	4059625316139	467
HG	71582670	151.20	4059625325889	467
HG	71583000	55.70	4059625325551	468
HG	71583670	78.00	4059625325872	468
HG	71584000	67.10	4059625316122	516
HG	71584670	93.90	4059625325865	516
HG	71585000	87.70	4059625316115	517

brand	code no.	Euro	EAN	page
HG	71585670	121.90	4059625325858	517
HG	71587000	395.00	4059625325599	466
HG	71588000	512.00	4059625325605	467
HG	71590000	147.00	4059625321409	481
HG	71591000	130.00	4059625325469	481
HG	71591670	182.00	4059625325834	481
HG	71592000	66.40	4059625325568	481
HG	71592670	93.00	4059625325810	481
HG	71593000	80.00	4059625321393	517
HG	71593670	112.00	4059625325803	517
HG	71594000	105.00	4059625321386	518
HG	71594670	147.00	4059625325797	518
HG	71596000	470.00	4059625325636	479
HG	71597000	617.00	4059625325643	480
HG	71600000	93.70	4011097737799	503
HG	71601000	93.70	4011097737782	503
HG	71604000	35.10	4059625194157	505
HG	71605000	105.40	4011097737775	504
HG	71606000	35.10	4011097737768	505
HG	71607000	105.40	4011097754581	504
HG	71629000	123.80	4011097787749	498
HG	71630000	99.60	4011097737751	503
HG	71640000	77.40	4059625316108	477
HG	71640670	108.40	4059625325780	477
HG	71646000	77.40	4059625310762	477
HG	71647000	455.00	4059625325629	477
HG	71649000	28.00	4059625321379	478
HG	71649670	39.20	4059625338865	478
HG	71650000	92.00	4059625315798	487
HG	71650670	128.80	4059625325759	487
HG	71656000	92.00	4059625405406	487
HG	71657000	541.00	4059625325667	487
HG	71658000	33.00	4059625325339	488
HG	71658670	46.20	4059625338858	488
HG	71666000	131.20	4011097769936	505
HG	71667000	87.70	4059625363638	477
HG	71667670	122.80	4059625363621	477
HG	71668000	100.80	4059625363614	488
HG	71668670	141.10	4059625363607	488
HG	71700000	116.60	4011097770703	423
HG	71701000	116.60	4011097770697	423
HG	71702000	109.20	4011097770680	423
HG	71703000	116.60	4011097770673	423
HG	71704000	109.20	4011097770666	423
HG	71705000	116.60	4011097770659	522
HG	71706000	102.90	4011097770642	425
HG	71707000	225.50	4011097770772	423
HG	71710000	142.30	4011097770765	424
HG	71710140	213.40	4059625232026	424
HG	71710340	213.40	4059625229521	424
HG	71710670	199.10	4059625232033	424
HG	71710700	199.10	4059625232040	424
HG	71710990	213.40	4059625232057	424
HG	71711000	142.30	4011097770758	424
HG	71712000	134.80	4011097770741	424
HG	71712140	202.30	4059625265789	424
HG	71712340	202.30	4059625147054	424
HG	71712670	188.70	4059625265765	424
HG	71712700	188.70	4059625265772	424
HG	71712990	202.30	4059625035573	424
HG	71713000	142.30	4011097770734	424
HG	71713140	213.40	4059625232064	424
HG	71713340	213.40	4059625232071	424
HG	71713670	199.10	4059625232088	424

brand	code no.	Euro	EAN	page
HG	71713700	199.10	4059625232095	424
HG	71713990	213.40	4059625232101	424
HG	71714000	134.80	4011097770727	424
HG	71714140	202.30	4059625265833	424
HG	71714340	202.30	4059625265819	424
HG	71714670	188.70	4059625265796	424
HG	71714700	188.70	4059625265802	424
HG	71714990	202.30	4059625265826	424
HG	71715000	142.30	4011097778495	521
HG	71716000	237.80	4011097770710	425
HG	71716140	356.90	4059625232118	425
HG	71716340	356.90	4059625229538	425
HG	71716670	333.00	4059625232125	425
HG	71716700	333.00	4059625232132	425
HG	71716990	356.90	4059625232149	425
HG	71717000	231.70	4011097770826	425
HG	71717140	347.70	4059625265871	425
HG	71717340	347.70	4059625198001	425
HG	71717670	324.50	4059625265840	425
HG	71717700	324.50	4059625265857	425
HG	71717990	347.70	4059625265864	425
HG	71718000	175.00	4059625338841	422
HG	71719000	155.00	4059625338827	422
HG	71720000	142.30	4011097770819	427
HG	71720140	213.40	4059625250457	427
HG	71720340	213.40	4059625250440	427
HG	71720670	199.10	4059625250433	427
HG	71720700	199.10	4059625250426	427
HG	71720990	213.40	4059625250419	427
HG	71721000	142.30	4011097770802	427
HG	71729000	212.10	4011097770796	427
HG	71730000	540.60	4011097782409	429
HG	71731000	386.20	4011097782393	430
HG	71732000	199.70	4011097770789	426
HG	71733000	257.40	4011097770871	426
HG	71733140	386.20	4059625232156	426
HG	71733340	386.20	4059625229545	426
HG	71733670	360.30	4059625232163	426
HG	71733700	360.30	4059625232170	426
HG	71733990	386.20	4059625170472	426
HG	71734000	225.50	4011097778457	426
HG	71734140	338.30	4059625232187	426
HG	71734340	338.30	4059625232194	426
HG	71734670	315.80	4059625232200	426
HG	71734700	315.80	4059625232217	426
HG	71734990	338.30	4059625232224	426
HG	71740000	186.30	4011097770864	427
HG	71740140	279.50	4059625232231	427
HG	71740340	279.50	4059625221754	427
HG	71740670	260.80	4059625232248	427
HG	71740700	260.80	4059625232255	427
HG	71740990	279.50	4059625232262	427
HG	71745000	154.40	4011097770840	428
HG	71745140	231.60	4059625232279	428
HG	71745340	231.60	4059625232286	428
HG	71745670	216.10	4059625232293	428
HG	71745700	216.10	4059625232309	428
HG	71745990	231.60	4059625232316	428
HG	71746000	71.00	4011097770833	428
HG	71747000	245.20	4011097791395	429
HG	71748000	386.20	4011097788807	431
HG	71748140	579.30	4059625232323	431
HG	71748340	579.30	4059625232330	431
HG	71748670	540.70	4059625232347	431
HG	71748700	540.70	4059625232354	431
HG	71748990	579.30	4059625232361	431
HG	71750000	193.70	4011097782379	422
HG	71751000	186.30	4011097775791	422
HG	71752000	283.10	4011097782416	423
HG	71753000	276.90	4011097775784	423
HG	71754000	219.60	4011097782355	425
HG	71754140	329.30	4059625246429	425
HG	71754340	329.30	4059625246412	425
HG	71754670	307.40	4059625246443	425
HG	71754700	307.40	4059625246450	425
HG	71754990	329.30	4059625246436	425
HG	71755000	212.10	4011097782348	425
HG	71760000	160.60	4011097770918	431
HG	71760140	241.00	4059625232378	431
HG	71760340	241.00	4059625232385	431
HG	71760670	224.80	4059625232392	431
HG	71760700	224.80	4059625232408	431
HG	71760990	241.00	4059625232415	431
HG	71761000	180.30	4011097770901	431
HG	71764000	51.50	4059625194119	432
HG	71764670	72.00	4059625410523	432
HG	71765000	128.70	4011097778327	432
HG	71765140	193.10	4059625232422	432
HG	71765340	193.10	4059625147061	432
HG	71765670	180.20	4059625232439	432
HG	71765700	180.20	4059625232446	432
HG	71765990	193.10	4059625232453	432
HG	71766000	51.50	4011097770895	432
HG	71768000	128.70	4011097778310	432
HG	71800000	288.60	4059625085127	661
HG	71800800	375.10	4059625085110	661
HG	71801000	255.30	4059625085103	662
HG	71801800	331.90	4059625085097	662
HG	71802000	183.20	4059625085080	662
HG	71802800	238.10	4059625085073	662
HG	71803000	288.60	4059625085066	663
HG	71804000	144.20	4059625085059	663
HG	71805000	133.20	4059625085042	663
HG	71806000	133.20	4059625085035	663
HG	71806800	173.10	4059625085028	663
HG	71807000	166.50	4059625085011	663
HG	71808000	111.00	4059625085004	665
HG	71808800	144.20	4059625084991	665
HG	71809000	111.00	4059625084984	665
HG	71813000	272.00	4059625084939	664
HG	71814000	183.20	4059625098356	664
HG	71814800	238.10	4059625098363	664
HG	71820000	346.40	4059625098370	661
HG	71820800	432.90	4059625098387	661
HG	71821000	313.00	4059625098394	662
HG	71821800	389.60	4059625098400	662
HG	71829000	240.90	4059625098417	664
HG	71829800	295.80	4059625098424	664
HG	71830000	101.30	4011097761268	669
HG	71831000	121.20	4011097766461	669
HG	71832000	115.30	4011097766454	668
HG	71833000	147.70	4011097775487	668
HG	71834000	265.00	4011097766447	669
HG	71835000	148.80	4011097766430	668
HG	71836000	148.80	4011097766423	669
HG	71837000	101.30	4011097766416	669
HG	71839000	115.30	4011097775753	668
HG	71860000	115.30	4059625197103	668

brand	code no.	Euro	EAN	page
HG	71861000	148.80	4059625196755	668
HG	71862000	255.30	4059625198490	662
HG	71864000	133.20	4059625198513	663
HG	71865000	183.20	4059625198520	664
HG	71866000	111.00	4059625198537	665
HG	71870000	150.00	4059625321362	670
HG	71870670	210.00	4059625325698	670
HG	71871000	179.00	4059625321355	671
HG	71871670	250.60	4059625325674	671
HG	71970000	29.40	4011097737737	330
72				
HG	72010000	142.30	4011097770048	434
HG	72011000	142.30	4011097770116	434
HG	72012000	134.80	4011097770109	434
HG	72013000	142.30	4011097770093	434
HG	72014000	134.80	4011097770086	434
HG	72015000	142.30	4011097770079	522
HG	72017000	128.70	4011097770055	437
HG	72018000	134.80	4011097775715	434
HG	72020000	168.00	4011097770161	435
HG	72021000	160.60	4011097770154	435
HG	72022000	168.00	4011097770147	435
HG	72023000	160.60	4011097770130	435
HG	72024000	168.00	4011097770123	522
HG	72025000	160.60	4011097775708	435
HG	72031000	257.40	4011097770246	436
HG	72032000	251.20	4011097770239	436
HG	72040000	193.70	4011097770222	433
HG	72041000	186.30	4011097770215	433
HG	72042000	231.70	4011097770208	433
HG	72043000	225.50	4011097770192	433
HG	72044000	308.90	4011097770185	433
HG	72045000	311.50	4011097770178	433
HG	72105000	283.10	4011097770307	436
HG	72110000	219.60	4011097770291	437
HG	72111000	245.20	4011097770284	437
HG	72113000	451.20	4011097782546	435
HG	72115000	554.10	4011097782522	436
HG	72116000	546.70	4011097782515	436
HG	72200000	168.00	4011097770260	438
HG	72202000	219.60	4011097775494	438
HG	72290000	219.60	4011097770253	438
HG	72291000	271.10	4011097781808	438
HG	72400000	212.10	4011097770383	439
HG	72401000	231.70	4011097770376	439
HG	72405000	174.10	4011097770352	440
HG	72406000	296.70	4011097770345	440
HG	72407000	77.20	4011097770338	440
HG	72410000	109.20	4011097770420	441
HG	72412000	1,618.00	4011097782508	439
HG	72416000	579.70	4011097770314	441
HG	72417000	417.90	4011097770413	442
HG	72418000	579.70	4011097770406	442
HG	72419000	417.90	4011097770390	443
HG	72600000	168.00	4011097770475	444
HG	72601000	180.30	4011097770468	444
HG	72605000	154.40	4011097770444	444
HG	72606000	51.50	4011097770437	444
HG	72800000	321.00	4059625255452	653
HG	72800670	417.30	4059625255445	653
HG	72800800	417.30	4059625255438	653
HG	72801000	374.50	4059625255421	654
HG	72801670	486.90	4059625255414	654
HG	72801800	486.90	4059625255407	654

brand	code no.	Euro	EAN	page
HG	72802000	272.90	4059625255391	654
HG	72802670	355.20	4059625255384	654
HG	72802800	355.20	4059625255377	654
HG	72803000	326.40	4059625255360	655
HG	72803670	424.80	4059625255353	655
HG	72803800	424.80	4059625255346	655
HG	72804000	219.40	4059625255339	655
HG	72804670	285.70	4059625255322	655
HG	72804800	285.70	4059625255315	655
HG	72805000	267.50	4059625277768	655
HG	72805670	347.80	4059625277775	655
HG	72805800	347.80	4059625277782	655
HG	72806000	192.60	4059625255308	656
HG	72806670	250.40	4059625255292	656
HG	72806800	250.40	4059625255285	656
HG	72807000	240.80	4059625277850	656
HG	72807670	312.90	4059625277867	656
HG	72807800	312.90	4059625277874	656
HG	72808000	219.40	4059625255278	656
HG	72808670	285.70	4059625255261	656
HG	72808800	285.70	4059625255254	656
HG	72809000	272.90	4059625255247	657
HG	72809670	355.20	4059625255230	657
HG	72809800	355.20	4059625255223	657
HG	72810000	273.20	4011097772455	651
HG	72810800	355.20	4011097772462	651
HG	72811000	319.70	4011097823638	652
HG	72812000	308.80	4011097772479	651
HG	72813000	392.30	4011097772493	650
HG	72813800	509.80	4011097772707	650
HG	72814000	239.90	4011097823621	650
HG	72814800	311.70	4011097823614	650
HG	72815000	341.90	4011097823607	651
HG	72815800	444.40	4011097823591	651
HG	72816000	273.20	4059625198155	651
HG	72817000	392.30	4059625197981	650
HG	72820000	394.60	4011097772721	649
HG	72820800	513.20	4011097772738	649
HG	72821000	477.90	4011097772752	646
HG	72821800	621.60	4011097772769	646
HG	72822000	424.30	4011097823584	648
HG	72822800	551.60	4011097823577	648
HG	72823000	478.50	4059625255667	645
HG	72823800	622.40	4059625255650	645
HG	72824000	425.00	4059625255643	647
HG	72824800	551.90	4059625255636	647
HG	72825000	394.60	4059625198186	649
HG	72826000	477.90	4059625198209	646
HG	72827000	240.80	4059625277928	657
HG	72827670	312.90	4059625277935	657
HG	72827800	312.90	4059625277942	657
HG	72840000	187.30	4059625255216	657
HG	72840670	244.00	4059625255209	657
HG	72840800	244.00	4059625255193	657
HG	72841000	69.60	4059625293218	689
HG	72841670	90.40	4059625293225	689
HG	72841800	90.40	4059625293232	689
HG	72842000	321.00	4059625269909	653
HG	72842670	417.30	4059625269695	653
HG	72843000	219.40	4059625269688	655
HG	72843670	285.10	4059625269671	655
HG	72844000	192.60	4059625269664	656
HG	72844670	250.40	4059625269657	656
HG	72845000	219.40	4059625269640	656

brand	code no.	Euro	EAN	page
HG	72845670	285.10	4059625269633	656
73				
HG	73561000	66.50	4059625131503	553
HG	73800000	496.80	4059625017630	643
HG	73800800	627.00	4059625017623	643
HG	73801000	550.10	4059625017616	642
HG	73801800	696.20	4059625017609	642
HG	73802000	508.30	4059625017593	640
HG	73802800	641.90	4059625017586	640
HG	73803000	561.80	4059625017579	638
HG	73803800	711.30	4059625017562	638
HG	73804000	571.20	4059625017555	636
HG	73804800	742.40	4059625017548	636
HG	73807000	561.80	4059625198292	638
HG	73812000	456.30	4059625017494	644
HG	73812800	575.00	4059625017487	644
HG	73816000	562.60	4059625176221	637
HG	73816800	707.90	4059625176207	637
HG	73817000	510.50	4059625176184	639
HG	73817800	640.40	4059625176177	639
HG	73818000	571.70	4059625176160	636
HG	73818340	857.60	4059625229590	636
HG	73818670	800.30	4059625232514	636
HG	73818800	738.20	4059625176153	636
HG	73819000	509.40	4059625255629	635
HG	73819800	662.30	4059625255612	635
HG	73820000	515.70	4059625255605	637
HG	73820800	670.30	4059625255599	637
HG	73822000	460.10	4059625255582	639
HG	73822800	598.50	4059625255575	639
HG	73823000	496.80	4059625198254	643
HG	73824000	550.10	4059625198230	642
HG	73825000	571.20	4059625198223	636
HG	73828000	456.30	4059625198278	644
HG	73830000	642.00	4059625255568	635
HG	73830670	898.80	4059625255186	635
HG	73830800	834.60	4059625255551	635
HG	73831000	695.50	4059625255179	634
HG	73831670	973.70	4059625255162	634
HG	73831800	909.50	4059625255155	634
HG	73836000	588.50	4059625269442	635
HG	73836670	823.90	4059625278093	635
HG	73836800	770.40	4059625269435	635
HG	73837000	642.00	4059625269428	634
HG	73837670	898.80	4059625278123	634
HG	73837800	834.60	4059625269411	634
HG	73850000	394.00	4059625017456	651
HG	73850800	493.40	4059625017449	651
HG	73851000	443.00	4059625017432	650
HG	73851800	556.80	4059625017425	650
HG	73852000	474.00	4059625017418	649
HG	73852800	597.30	4059625017401	649
HG	73853000	526.10	4059625017395	647
HG	73853800	665.10	4059625017388	647
HG	73860000	406.80	4059625017364	652
HG	73860800	510.00	4059625017357	652
HG	73867000	527.80	4059625176085	646
HG	73867800	663.00	4059625176078	646
HG	73868000	477.20	4059625176061	648
HG	73868800	597.10	4059625176054	648
HG	73876000	443.00	4059625198339	650
HG	73880000	325.40	4059625017210	658
HG	73880800	405.00	4059625017203	658
HG	73895000	325.40	4059625198438	658
74				
HG	74500000	291.20	4011097813226	360
HG	74502000	296.90	4011097813202	360
HG	74506000	314.20	4011097813141	360
HG	74507000	319.70	4011097813103	360
HG	74511000	422.60	4011097813066	361
HG	74512000	434.00	4011097813028	361
HG	74514000	405.60	4011097835129	364
HG	74515000	422.60	4011097835112	364
HG	74520000	399.80	4011097812960	366
HG	74522000	405.60	4011097812939	367
HG	74525000	365.50	4011097835105	362
HG	74526000	388.40	4011097835099	362
HG	74530000	1,222.00	4011097835082	365
HG	74532000	1,793.00	4011097835075	368
HG	74540000	376.90	4011097812915	369
HG	74545000	262.80	4011097826028	371
HG	74546000	365.50	4011097826004	371
HG	74548000	308.40	4011097835068	373
HG	74550000	708.10	4011097835051	374
HG	74551000	536.70	4011097835044	375
HG	74552000	708.10	4011097835037	376
HG	74553000	536.70	4011097835020	377
HG	74560000	262.80	4011097812878	378
HG	74565000	245.50	4011097825793	379
HG	74800000	160.00	4059625339749	665
HG	74800670	220.00	4059625339763	665
HG	74800800	210.00	4059625339756	665
HG	74801000	230.00	4059625339770	665
HG	74801670	320.00	4059625339794	665
HG	74801800	300.00	4059625339787	665
HG	74802000	115.00	4059625340103	666
HG	74802670	160.00	4059625340127	666
HG	74802800	150.00	4059625340110	666
HG	74803000	180.00	4059625340134	666
HG	74803670	240.00	4059625340158	666
HG	74803800	230.00	4059625340141	666
HG	74804000	250.00	4059625340165	667
HG	74804670	340.00	4059625340189	667
HG	74804800	320.00	4059625340172	667
HG	74805000	155.00	4059625340196	667
HG	74806000	140.00	4059625340202	666
HG	74807000	220.00	4059625340219	667
HG	74808000	220.00	4059625340226	667
HG	74810000	160.00	4059625340233	665
HG	74811000	115.00	4059625340240	666
HG	74813000	115.00	4059625340264	666
75				
HG	75010000	145.00	4059625335246	412
HG	75010670	203.00	4059625335208	412
HG	75010700	203.00	4059625335161	412
HG	75012000	138.00	4059625335109	412
HG	75012670	193.20	4059625335086	412
HG	75012700	193.20	4059625335062	412
HG	75013000	133.00	4059625335048	414
HG	75013670	186.20	4059625335031	414
HG	75013700	186.20	4059625335024	414
HG	75020000	165.00	4059625334980	412
HG	75020670	231.00	4059625334942	412
HG	75020700	231.00	4059625334904	412
HG	75022000	158.00	4059625334843	412
HG	75022670	221.20	4059625334829	412
HG	75022700	221.20	4059625334805	412

brand	code no.	Euro	EAN	page
HG	75023000	165.00	4059625399835	413
HG	75023670	231.00	4059625399828	413
HG	75023700	231.00	4059625399811	413
HG	75024000	158.00	4059625399804	413
HG	75024670	221.20	4059625399699	413
HG	75024700	221.20	4059625399682	413
HG	75030000	245.00	4059625334751	413
HG	75030670	343.00	4059625335727	413
HG	75030700	343.00	4059625335697	413
HG	75032000	238.00	4059625335659	413
HG	75032670	333.20	4059625335642	413
HG	75032700	333.20	4059625335635	413
HG	75033000	250.00	4059625322710	414
HG	75033670	350.00	4059625337387	414
HG	75033700	350.00	4059625337356	414
HG	75040000	254.00	4059625335598	413
HG	75040670	355.60	4059625335567	413
HG	75040700	355.60	4059625335536	413
HG	75042000	247.00	4059625335499	413
HG	75042670	345.80	4059625335468	413
HG	75042700	345.80	4059625335437	413
HG	75050000	227.00	4059625337318	414
HG	75050670	317.80	4059625337295	414
HG	75050700	317.80	4059625337271	414
HG	75200000	210.00	4059625335369	415
HG	75200670	294.00	4059625335345	415
HG	75200700	294.00	4059625335321	415
HG	75210000	247.50	4059625395240	412
HG	75410000	120.00	4059625322727	417
HG	75410670	168.00	4059625337219	417
HG	75410700	168.00	4059625337196	417
HG	75415000	180.00	4059625358504	417
HG	75415670	252.00	4059625358511	417
HG	75415700	252.00	4059625358528	417
HG	75416000	280.00	4059625358535	417
HG	75416670	392.00	4059625358542	417
HG	75416700	392.00	4059625358559	417
HG	75420000	230.00	4059625335291	416
HG	75420670	322.00	4059625335260	416
HG	75420700	322.00	4059625336199	416
HG	75444000	570.00	4059625322703	418
HG	75444670	798.00	4059625337080	418
HG	75444700	798.00	4059625337073	418
HG	75445000	1,350.00	4059625322697	416
HG	75445670	1,890.00	4059625337035	416
HG	75445700	1,890.00	4059625336991	416
HG	75615000	160.00	4059625358566	419
HG	75615670	224.00	4059625358573	419
HG	75615700	224.00	4059625358580	419
HG	75620000	180.00	4059625336151	418
HG	75620670	252.00	4059625336137	418
HG	75620700	252.00	4059625336113	418
76				
HG	76010000	171.00	4059625336083	402
HG	76010670	239.40	4059625334430	402
HG	76010700	239.40	4059625334447	402
HG	76013000	156.00	4059625335932	404
HG	76013670	218.40	4059625335925	404
HG	76013700	218.40	4059625335918	404
HG	76020000	190.00	4059625335871	402
HG	76020670	266.00	4059625334423	402
HG	76020700	266.00	4059625334416	402
HG	76023000	195.00	4059625335758	402
HG	76023670	273.00	4059625334409	402

brand	code no.	Euro	EAN	page
HG	76023700	273.00	4059625334393	402
HG	76024000	200.00	4059625334461	513
HG	76024670	280.00	4059625334386	513
HG	76024700	280.00	4059625334379	513
HG	76033000	277.50	4059625338124	404
HG	76033670	388.50	4059625338094	404
HG	76033700	388.50	4059625338063	404
HG	76034000	290.00	4059625338025	405
HG	76034670	406.00	4059625337998	405
HG	76034700	406.00	4059625337967	405
HG	76050000	266.00	4059625337929	405
HG	76050670	372.40	4059625337899	405
HG	76050700	372.40	4059625337868	405
HG	76051000	239.40	4059625337820	405
HG	76051670	335.20	4059625337813	405
HG	76051700	335.20	4059625337806	405
HG	76060000	265.00	4059625336564	403
HG	76060670	371.00	4059625336557	403
HG	76060700	371.00	4059625336540	403
HG	76063000	315.00	4059625336533	403
HG	76063670	441.00	4059625336496	403
HG	76063700	441.00	4059625336441	403
HG	76070000	280.00	4059625334454	403
HG	76070670	392.00	4059625334362	403
HG	76070700	392.00	4059625334355	403
HG	76200000	228.00	4059625336823	406
HG	76200670	319.20	4059625336816	406
HG	76200700	319.20	4059625336809	406
HG	76210000	260.00	4059625395233	402
HG	76210670	364.00	4059625395226	402
HG	76220000	360.00	4059625395219	404
HG	76220670	504.00	4059625395202	404
HG	76410000	160.00	4059625337738	408
HG	76410670	224.00	4059625337714	408
HG	76410700	224.00	4059625337691	408
HG	76415000	185.00	4059625357637	407
HG	76415670	259.00	4059625357644	407
HG	76415700	259.00	4059625357651	407
HG	76416000	285.00	4059625357668	407
HG	76416670	399.00	4059625357675	407
HG	76416700	399.00	4059625357682	407
HG	76420000	260.00	4059625336793	407
HG	76420670	364.00	4059625336762	407
HG	76420700	364.00	4059625336731	407
HG	76444000	690.00	4059625337592	408
HG	76444670	966.00	4059625337585	408
HG	76444700	966.00	4059625337578	408
HG	76445000	1,500.00	4059625322734	406
HG	76445670	2,100.00	4059625337530	406
HG	76445700	2,100.00	4059625337493	406
HG	76615000	165.00	4059625357606	409
HG	76615670	231.00	4059625357613	409
HG	76615700	231.00	4059625357620	409
HG	76620000	210.00	4059625336694	409
HG	76620670	294.00	4059625336670	409
HG	76620700	294.00	4059625336656	409
HG	76800000	575.00	4059625391082	630
HG	76800670	805.00	4059625391105	630
HG	76800800	747.50	4059625391099	630
HG	76801000	525.00	4059625391112	630
HG	76801670	735.00	4059625391136	630
HG	76801800	682.50	4059625391129	630
HG	76802000	555.00	4059625391143	631
HG	76802670	775.00	4059625391167	631

brand	code no.	Euro	EAN	page
HG	76802800	721.50	4059625391150	631
HG	76803000	450.00	4059625391174	632
HG	76803670	630.00	4059625391198	632
HG	76803800	585.00	4059625391181	632
HG	76804000	500.00	4059625391235	632
HG	76804670	700.00	4059625391259	632
HG	76804800	650.00	4059625391242	632
HG	76814000	74.00	4059625377734	632
HG	76815000	80.00	4059625377727	633
HG	76818000	101.90	4059625391419	631
HG	76826000	500.00	4059625391204	631
HG	76826670	700.00	4059625391228	631
HG	76826800	650.00	4059625391211	631
HG	76827000	115.00	4059625377710	633
HG	76828000	185.00	4059625377703	633
HG	76829000	190.00	4059625377390	633
HG	76830000	190.00	4059625377383	634
92				
HG	92017000	35.00	4011097143477	696
HG	92018000	14.40	4011097166285	696
HG	92019000	4.10	4011097153872	697
HG	92027000	22.10	4011097138312	696
HG	92107000	14.40	4011097132921	695
HG	92109000	28.20	4011097166940	695
HG	92109450	35.00	4011097166971	695
HG	92504000	44.90	4011097766089	408
HG	92571450	25.20	4011097780931	316
HG	92571610	25.20	4011097781136	316
HG	92572450	25.20	4011097780948	316
HG	92572610	25.20	4011097781143	316
HG	92573450	25.20	4011097780955	316
HG	92573610	25.20	4011097781204	316
HG	92574450	25.20	4011097780979	316
HG	92574610	25.20	4011097781167	316
HG	92575450	25.20	4011097780986	316
HG	92575610	25.20	4011097781174	316
HG	92576450	25.20	4011097780993	316
HG	92576610	25.20	4011097781181	316
HG	92577450	25.20	4011097781105	316
HG	92577610	25.20	4011097781198	316
HG	92578450	25.20	4011097780962	316
HG	92578610	25.20	4011097781150	316
HG	92579450	25.20	4011097780924	315
HG	92579610	25.20	4011097781112	315
HG	92601000	127.30	4011097133249	703
HG	92605000	28.20	4011097133287	703
HG	92620000	22.10	4011097189451	709
HG	92620450	35.00	4011097133447	709
HG	92631000	196.30	4011097133546	703
HG	92730000	44.90	4011097222776	699
93				
HG	93286000	28.20	4059625136188	548
HG	93500000	13.00	4059625222478	336
HG	93571670	9.90	4059625270134	324
HG	93571700	9.90	4059625270127	324
HG	93571880	6.60	4059625141892	324
HG	93572670	9.90	4059625270110	325
HG	93572700	9.90	4059625270103	325
HG	93572880	6.60	4059625142608	325
HG	93573670	9.90	4059625270097	324
HG	93573700	9.90	4059625270080	324
HG	93573880	6.60	4059625142615	324
HG	93574670	9.90	4059625270073	325
HG	93574700	9.90	4059625270066	325
HG	93574880	6.60	4059625142622	325
HG	93575670	9.90	4059625270059	325
HG	93575700	9.90	4059625270042	325
HG	93575880	6.60	4059625142639	325
HG	93576670	9.90	4059625270035	325
HG	93576700	9.90	4059625270028	325
HG	93576880	6.60	4059625142646	325
HG	93577670	9.90	4059625270011	325
HG	93577700	9.90	4059625270004	325
HG	93577880	6.60	4059625142653	325
HG	93578670	9.90	4059625269992	325
HG	93578700	9.90	4059625269985	325
HG	93578880	6.60	4059625142660	325
HG	93579670	9.90	4059625269978	324
HG	93579700	9.90	4059625269961	324
HG	93579880	6.60	4059625142677	324
HG	93913000	17.80	4059625365069	422
94				
AX	94004000	127.30	4011097200224	699
AX	94005000	17.60	4011097228907	701
HG	94008000	28.20	4011097326849	703
HG	94009000	28.20	4011097326894	702
HG	94033000	6.60	4011097399256	700
HG	94051000	10.90	4011097210315	696
HG	94053000	14.40	4011097204314	695
HG	94055000	14.40	4011097259536	696
HG	94063000	6.60	4011097256412	708
HG	94074000	10.90	4011097242606	708
HG	94076000	22.10	4011097262291	708
HG	94077000	28.20	4011097345024	702
HG	94078000	10.90	4011097399218	708
HG	94129000	67.70	4011097177106	710
HG	94130000	14.40	4011097232423	707
HG	94135000	8.90	4011097213071	707
HG	94139000	63.70	4011097178752	597
HG	94139140	118.40	4011097949062	597
HG	94139340	118.40	4011097949048	597
HG	94139670	118.40	4059625308943	597
HG	94139700	118.40	4059625304327	597
HG	94139990	95.70	4011097949208	597
HG	94140000	35.00	4011097203799	709
HG	94142000	22.10	4011097183800	702
HG	94148000	55.40	4011097177120	710
HG	94149000	22.10	4011097178745	703
HG	94156000	14.40	4011097184111	700
AX	94183000	28.20	4011097241098	702
AX	94184000	4.10	4011097233246	708
HG	94246000	2.50	4011097134888	698
HG	94268000	6.60	4059625358948	555
AX	94272000	55.40	4011097135168	706
HG	94282000	98.10	4011097239040	703
HG	94850000	17.60	4011097232638	700
95				
HG	95014000	44.90	4011097404332	702
HG	95039000	4.10	4011097326832	708
HG	95048000	55.40	4011097263748	710
AX	95052000	78.90	4011097238715	700
AX	95053000	22.10	4011097362571	700
HG	95064000	14.40	4011097363813	695
HG	95065520	55.40	4011097296050	693
HG	95065530	55.40	4011097296067	693
HG	95065840	78.90	4011097296036	693
HG	95065880	55.40	4011097296043	693
HG	95239000	10.90	4011097611686	237

brand	code no.	Euro	EAN	page
HG	95960000	28.20	4011097696621	231
96				
HG	96006000	2.50	4011097256955	710
HG	96016000	22.10	4011097400204	709
HG	96026000	17.60	4011097136011	711
HG	96026450	28.20	4011097136042	711
HG	96026880	22.10	4011097136073	711
HG	96027000	17.60	4011097684505	711
HG	96027800	28.20	4011097234953	711
HG	96083000	22.10	4011097136264	706
HG	96100000	4.10	4011097136547	709
HG	96153000	22.10	4011097136745	711
HG	96170000	55.40	4011097136844	693
HG	96177880	14.40	4011097158242	695
HG	96179000	8.90	4011097176468	697
HG	96184000	8.20	4011097150512	153
HG	96186000	8.70	4011097161754	696
HG	96188000	4.10	4011097176475	695
HG	96189000	4.10	4011097176482	695
HG	96190000	55.40	4011097176499	693
HG	96190450	67.70	4011097178172	693
HG	96190480	67.70	4011097178165	693
HG	96190840	98.10	4011097178202	693
HG	96190880	67.70	4011097363707	693
HG	96191000	17.60	4011097176505	696
HG	96192000	6.60	4011097249759	694
HG	96193000	4.10	4011097461069	695
HG	96194000	6.60	4011097326207	695
HG	96195000	98.10	4011097284743	693
HG	96195840	196.30	4011097284750	693
HG	96200000	44.90	4011097137100	710
HG	96272000	17.60	4011097414799	695
HG	96324000	17.60	4011097399966	709
HG	96339000	55.40	4011097363295	699
HG	96370000	48.60	4011097345000	331
HG	96387000	55.60	4011097361093	707
HG	96392000	22.10	4011097405704	711
HG	96396000	30.20	4011097367583	707
AX	96441000	127.30	4011097432717	365
AX	96467000	14.40	4011097409405	707
HG	96507000	28.20	4011097603285	708
HG	96529000	14.40	4011097391427	700
HG	96615000	35.80	4011097391502	337
HG	96618000	22.10	4011097441245	706
HG	96657000	8.90	4011097460284	709
HG	96657800	17.60	4011097497372	709
HG	96708000	6.60	4011097436104	697
HG	96919000	55.40	4011097492360	706
HG	96920000	78.90	4011097477930	706
97				
HG	97116000	44.90	4011097475714	696
HG	97231000	14.40	4011097481876	706
HG	97336000	67.70	4011097478609	693
HG	97450000	8.70	4011097487304	151
AX	97462000	28.20	4011097491059	701
HG	97592000	17.60	4011097505954	703
98				
HG	98003000	2.50	4011097137568	710
HG	98058000	2.50	4011097137711	697
HG	98066000	2.50	4011097397344	710
HG	98069000	2.50	4011097137766	710
HG	98556000	22.10	4011097481883	697
AX	98610000	28.20	4011097528601	701
HG	98681000	14.40	4011097545714	696
HG	98804000	22.10	4011097568744	699
HG	98806000	4.10	4011097570822	711
HG	98993000	8.20	4011097589657	148

Hand showers



Rainfinity	page 96		Raindance Select E	page 96	
Raindance Select S	page 97		Pulsify Select S	page 98	
Pulsify S	page 99		Croma Select E	page 100	
Croma Select S	page 101		Croma 100	page 102	
Crometta	page 103		Crometta 85	page 103	
Vernis Blend	page 104		Jocolino	page 105	
DogShower	page 106				

hansgrohe hand showers

Product ranges at a glance

Rainfinity



Hand shower
130 3jet

Finish	-000, -140, -340 -670, -700, -990
Standard	14 l/min
EcoSmart 8-9 l/min	■
Green 6-7 l/min	
Select	■
QuickClean	■
XXL Performance	■
AirPower	
PowderRain	■

page 96



Baton hand shower
100 1jet

Finish	-000, -140, -340 -670, -700, -990
Standard	13,8 l/min
EcoSmart 8-9 l/min	■
Green 6-7 l/min	
Select	
QuickClean	■
XXL Performance	
AirPower	
PowderRain	■

Raindance Select E



Hand shower
150 3jet

Finish	-000, -400
Standard	16,4 l/min
EcoSmart 8-9 l/min	■
Green 6-7 l/min	
Select	■
QuickClean	■
XXL Performance	■
AirPower	■
PowderRain	

page 96



Hand shower
120 3jet

Finish	-000, -140, -340, -400, -670, -700, -990
Standard	14,4 l/min
EcoSmart 8-9 l/min	■
Green 6-7 l/min	
Select	■
QuickClean	■
XXL Performance	■
AirPower	■
PowderRain	

Raindance Select S



Hand shower
150 3jet

Finish	-000, -400
Standard	16,4 l/min
EcoSmart 8-9 l/min	■
Green 6-7 l/min	
Select	■
QuickClean	■
XXL Performance	■
AirPower	■
PowderRain	

page 97



Hand shower
120 3jet

Finish	-000, -140, -340, -400, -670, -700, -990
Standard	15 l/min
EcoSmart 8-9 l/min	■
Green 6-7 l/min	
Select	■
QuickClean	■
XXL Performance	■
AirPower	■
PowderRain	

Croma Select S

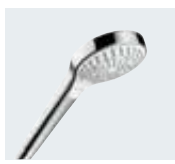

Hand shower
Multi

Finish	-400
Standard	16 l/min
EcoSmart 8-9 l/min	■
Green 6-7 l/min	
Select	■
QuickClean	■
XXL Performance	■
AirPower	
PowderRain	



Hand shower
Vario

Finish	-400
Standard	14,7 l/min
EcoSmart 8-9 l/min	■
Green 6-7 l/min	
Select	■
QuickClean	■
XXL Performance	■
AirPower	
PowderRain	



Hand shower
1jet

Finish	-400
Standard	16 l/min
EcoSmart 8-9 l/min	■
Green 6-7 l/min	
Select	
QuickClean	■
XXL Performance	■
AirPower	
PowderRain	

page 101

Croma 100



Hand shower
Multi

Finish	-000
Standard	19 l/min
EcoSmart 8-9 l/min	■
Green 6-7 l/min	
Select	
QuickClean	■
XXL Performance	■
AirPower	
PowderRain	



Hand shower
Vario

Finish	-000
Standard	18 l/min
EcoSmart 8-9 l/min	■
Green 6-7 l/min	
Select	
QuickClean	■
XXL Performance	■
AirPower	
PowderRain	



Hand shower
1jet

Finish	-000
Standard	16 l/min
EcoSmart 8-9 l/min	■
Green 6-7 l/min	
Select	
QuickClean	■
XXL Performance	■
AirPower	
PowderRain	

page 102

■ Available

Pulsify S



Hand shower 120 3jet PowderRain	Hand shower 105 3jet Relaxation	Hand shower 105 3jet Activation	Hand shower 105 1jet
-000, -140, -340, -400, -670, -700, -990	-000, -670, -700	-000, -670, -700	-000, -670, -700
11 l/min	11,4 l/min	11,5 l/min	13,5 l/min
■	■	■	
			■
■	■	■	
■	■	■	■
■	■	■	■
■			
■	■	■	■
page 97		page 98	

Croma Select E



Hand shower Multi	Hand shower Vario	Hand shower 1jet
-400	-400	-400
16 l/min	14,7 l/min	16 l/min
■	■	■
■	■	
■	■	■
■	■	■
page 100		

Crometta



Hand shower Vario	Hand shower 1jet
-400	-400
13,8 l/min	14 l/min
■	■
■	■
■	■
■	■
page 103	

Vernis Blend



Hand shower Vario
-000, -670
15,2 l/min
■
■
■
■
page 104

Jocolino

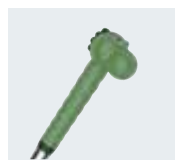

Children hand shower 2jet
-210, -570, -640
11 l/min
■
page 105

Dog-Shower



Dog shower 150 3jet Select
-540, -560, -670, -700
7,6 l/min
■
■
page 106

Rainfinity



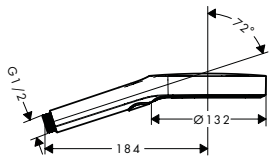

	finish	code no.	Euro
Rainfinity Hand shower 130 3jet			
· shower head size: 132 mm · spray type: PowderRain, Intense PowderRain, MonoRain · convenient diversion via Select button · spray disc surface: graphite · maximum flow rate at 3 bar: 14 l/ min · minimum flow pressure: 1,1 bar · with internal water conduction · rinseable screen seal · connection thread G ½ · connection dimension: DN15 · suitable for continous flow water heaters	Chrome Brushed Bronze Brushed Black Chrome Matt Black Matt White Polished Gold Optic	26864000 26864140 26864340 26864670 26864700 26864990	102.90 154.40 154.40 133.90 133.90 154.40
Water saving EcoSmart version: · **Rainfinity** Hand shower 130 3jet EcoSmart	Chrome Brushed Bronze Brushed Black Chrome Matt Black Matt White Polished Gold Optic	26865000 26865140 26865340 26865670 26865700 26865990	102.90 154.40 154.40 133.90 133.90 154.40



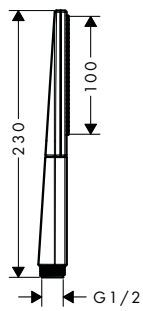

Rainfinity Baton hand shower 100 1jet			
· shower head size: 100 x 38 mm · spray type: PowderRain · spray disc surface: graphite · maximum flow rate at 3 bar: 13,8 l/ min · minimum flow pressure: 1 bar · with internal water conduction · rinseable screen seal · connection thread G ½ · connection dimension: DN15 · suitable for continous flow water heaters	Chrome Brushed Bronze Brushed Black Chrome Matt Black Matt White Polished Gold Optic	26866000 26866140 26866340 26866670 26866700 26866990	86.70 130.00 130.00 112.80 112.80 130.00
Water saving EcoSmart version: · **Rainfinity** Baton hand shower 100 1jet EcoSmart	Chrome Brushed Bronze Brushed Black Chrome Matt Black Matt White Polished Gold Optic	26867000 26867140 26867340 26867670 26867700 26867990	86.70 130.00 130.00 112.80 112.80 130.00

Raindance Select E



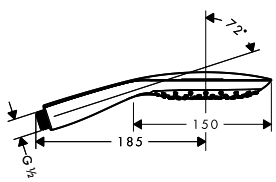

Raindance Select E Hand shower 150 3jet			
· shower head size: 150 mm · spray type: RainAir, CaresseAir, Mix · convenient diversion via Select button · easy cleanable plastic spray disc · maximum flow rate at 3 bar: 16,4 l/ min · minimum flow pressure: 1,5 bar · hand shower with 2-shell construction · with internal water conduction · rinseable screen seal · connection thread G ½ · connection dimension: DN15 · suitable for continous flow water heaters · hand shower can be used with sliders that are infinitely adjustable in the incline. The hand shower should not be used for sliders with two predefined positions.	Chrome White/Chrome	26550000 26550400	118.20 118.20
Water saving EcoSmart version: · **Raindance Select E** Hand shower 150 3jet EcoSmart 9 l/ min	Chrome White/Chrome	26551000 26551400	118.20 118.20

Measurements within scale drawings are in mm.

Technical specifications and units of measure are subject to change.

	finish	code no.	Euro
Raindance Select E Hand shower 120 3jet	Chrome	26520000	92.40
	Brushed Bronze	26520140	138.70
	Brushed Black	26520340	138.70
	Chrome		
	White/Chrome	26520400	92.40
	Matt Black	26520670	129.50
	Matt White	26520700	129.50
	Polished Gold Optic	26520990	138.70



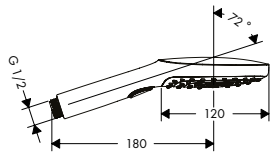

- shower head size: 120 mm
- spray type: RainAir, Rain, Whirl
- convenient diversion via Select button
- easy cleanable plastic spray disc
- maximum flow rate at 3 bar: 14,4 l/ min
- minimum flow pressure: 1 bar
- with internal water conduction
- rinseable screen seal
- connection thread G ½
- connection dimension: DN15
- suitable for continous flow water heaters

Water saving EcoSmart version:

· **Raindance Select E** Hand shower 120 3jet EcoSmart 9 l/ min	Chrome	26521000	92.40
	White/Chrome	26521400	92.40

Raindance Select S

Raindance Select S Hand shower 150 3jet	Chrome	28587000	118.20
	White/Chrome	28587400	118.20



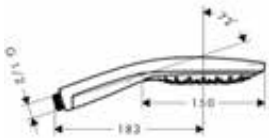

- shower head size: 150 mm
- spray type: RainAir, CaresseAir, Mix
- convenient diversion via Select button
- easy cleanable plastic spray disc
- maximum flow rate at 3 bar: 16,4 l/ min
- minimum flow pressure: 1,5 bar
- hand shower with 2-shell construction
- with internal water conduction
- rinseable screen seal
- connection thread G ½
- connection dimension: DN15
- suitable for continous flow water heaters
- hand shower can be used with sliders that are infinitely adjustable in the incline. The hand shower should not be used for sliders with two predefined positions.

Water saving EcoSmart version:

· **Raindance Select S** Hand shower 150 3jet EcoSmart 9 l/ min	Chrome	28588000	118.20
	White/Chrome	28588400	118.20

Raindance Select S Hand shower 120 3jet PowderRain	Chrome	26014000	94.30
	Brushed Bronze	26014140	141.40
	Brushed Black	26014340	141.40
	Chrome		
	Matt Black	26014670	132.00
	Matt White	26014700	132.00
	Polished Gold Optic	26014990	141.40



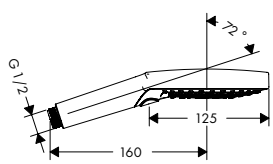

- shower head size: 125 mm
- spray type: PowderRain, Rain, Whirl
- convenient diversion via Select button
- easy cleanable plastic spray disc
- maximum flow rate at 3 bar: 11 l/ min
- minimum flow pressure: 1,2 bar
- with internal water conduction
- rinseable screen seal
- connection thread G ½
- connection dimension: DN15
- suitable for continous flow water heaters

Water saving EcoSmart version:

NEW · **Raindance Select S** Hand shower 120 3jet PowderRain EcoSmart	Chrome	26515000	94.30
NEW · **Raindance Select S** Hand shower 120 3jet PowderRain Green	Chrome	26516000	94.30

Measurements within scale drawings are in mm.

Technical specifications and units of measure are subject to change.

	finish	code no.	Euro



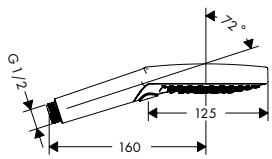

Raindance Select S Hand shower 120 3jet

- shower head size: 125 mm
- spray type: Rain, RainAir, Whirl
- convenient diversion via Select button
- easy cleanable plastic spray disc
- maximum flow rate at 3 bar: 15 l/min
- minimum flow pressure: 1,4 bar
- with internal water conduction
- rinseable screen seal
- connection thread G ½
- connection dimension: DN15
- suitable for continous flow water heaters

Chrome	26530000	92.40
Brushed Bronze	26530140	138.70
Brushed Black Chrome	26530340	138.70
White/Chrome	26530400	92.40
Matt Black	26530670	129.50
Matt White	26530700	129.50
Polished Gold Optic	26530990	138.70

Water saving EcoSmart version:

- **Raindance Select S** Hand shower 120 3jet EcoSmart 9 l/min

Chrome	26531000	92.40
Brushed Bronze	26531140	138.70
Brushed Black Chrome	26531340	138.70
White/Chrome	26531400	92.40
Matt Black	26531670	129.50
Matt White	26531700	129.50
Polished Gold Optic	26531990	138.70

Raindance Classic



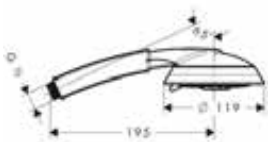

Raindance Classic Hand shower 100 3jet

- shower head size: 119 mm
- spray type: RainAir, Whirl, BalanceAir
- spray type adjustment by turning spray disc
- grey spray disc
- maximum flow rate at 3 bar: 17 l/min
- minimum flow pressure: 1 bar
- rinseable screen seal
- connection thread G ½
- connection dimension: DN15
- suitable for continous flow water heaters

Chrome	28548000	157.00
Chrome/Gold Optic	28548090	196.50

Pulsify Select S



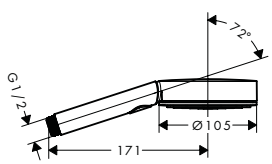

Pulsify Select S Hand shower 105 3jet Activation

- shower head size: 105 mm
- spray type: PowderRain, IntenseRain, MonoRain
- convenient diversion via Select button
- spray disc surface: graphite
- maximum flow rate at 3 bar: 11,5 l/min
- minimum flow pressure: 0,08 MPa (hydrodynamic pressure)
- with internal water conduction
- rinseable screen insert
- connection thread G ½
- connection dimension: DN15

Chrome	24100000	35.00
Matt Black	24100670	45.50
Matt White	24100700	45.50

Water saving EcoSmart version:

NEW

- **Pulsify Select S** Hand shower 105 3jet Activation EcoSmart

Chrome	24101000	35.00
Matt Black	24101670	45.50
Matt White	24101700	45.50

Alternative products:

NEW

- **Pulsify Select S** Hand shower 105 3jet Relaxation

Chrome	24110000	35.00
Matt Black	24110670	45.50
Matt White	24110700	45.50

NEW

- **Pulsify S** Hand shower 105 1jet

Chrome	24120000	26.50
Matt Black	24120670	34.50
Matt White	24120700	34.50

Measurements within scale drawings are in mm.

Technical specifications and units of measure are subject to change.

	finish	code no.	Euro

NEW



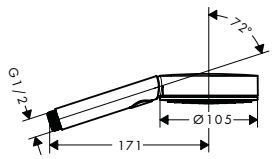

Pulsify Select S Hand shower 105 3jet Relaxation

- shower head size: 105 mm
- spray type: PowderRain, IntenseRain, Massage spray
- convenient diversion via Select button
- spray disc surface: graphite
- maximum flow rate at 3 bar: 11,4 l/min
- minimum flow pressure: 1 bar
- with internal water conduction
- rinseable screen insert
- connection thread G ½
- connection dimension: DN15

	Chrome	24110000	35.00
	Matt Black	24110670	45.50
	Matt White	24110700	45.50

Water saving EcoSmart version:

NEW

- **Pulsify Select S** Hand shower 105 3jet Relaxation EcoSmart

Chrome	24111000	35.00
Matt Black	24111670	45.50
Matt White	24111700	45.50

Alternative products:

NEW

- **Pulsify Select S** Hand shower 105 3jet Activation

Chrome	24100000	35.00
Matt Black	24100670	45.50
Matt White	24100700	45.50

NEW

- **Pulsify S** Hand shower 105 1jet

Chrome	24120000	26.50
Matt Black	24120670	34.50
Matt White	24120700	34.50

Pulsify S

NEW



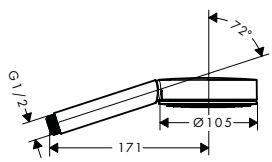

Pulsify S Hand shower 105 1jet

- shower head size: 105 mm
- spray type: PowderRain
- spray disc surface: graphite
- maximum flow rate at 3 bar: 13,5 l/min
- minimum flow pressure: 0,6 bar
- with internal water conduction
- rinseable screen insert
- connection thread G ½
- connection dimension: DN15

	Chrome	24120000	26.50
	Matt Black	24120670	34.50
	Matt White	24120700	34.50

Water saving EcoSmart version:

NEW

- **Pulsify S** Hand shower 105 1jet Green

Chrome	24121000	26.50
Matt Black	24121670	34.50
Matt White	24121700	34.50

Alternative products:

NEW

- **Pulsify Select S** Hand shower 105 3jet Activation

Chrome	24100000	35.00
Matt Black	24100670	45.50
Matt White	24100700	45.50

NEW

- **Pulsify Select S** Hand shower 105 3jet Relaxation

Chrome	24110000	35.00
Matt Black	24110670	45.50
Matt White	24110700	45.50

Measurements within scale drawings are in mm.

Technical specifications and units of measure are subject to change.

Croma Select E



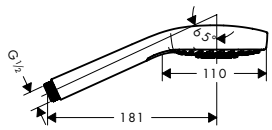

	finish	code no.	Euro
Croma Select E Hand shower Multi · shower head size: 110 mm · spray type: SoftRain, IntenseRain, Massage spray · convenient diversion via Select button · easy cleanable plastic spray disc, spray disc surface: white · maximum flow rate at 3 bar: 16 l/min · minimum flow pressure: 1 bar · with internal water conduction · rinseable screen seal · connection thread G ½ · connection dimension: DN15 · suitable for continous flow water heaters	White/Chrome	26810400	65.90
Water saving EcoSmart version: · **Croma Select E** Hand shower Multi EcoSmart 9 l/min	White/Chrome	26811400	65.90



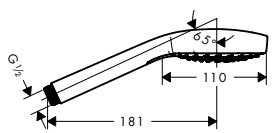

Croma Select E Hand shower Vario · shower head size: 110 mm · spray type: Rain, IntenseRain, TurboRain · convenient diversion via Select button · easy cleanable plastic spray disc, spray disc surface: white · maximum flow rate at 3 bar: 14,7 l/min · minimum flow pressure: 1 bar · with internal water conduction · rinseable screen seal · connection thread G ½ · connection dimension: DN15 · suitable for continous flow water heaters	White/Chrome	26812400	50.30
Water saving EcoSmart version: · **Croma Select E** Hand shower Vario EcoSmart 9 l/min	White/Chrome	26813400	50.30

Croma E



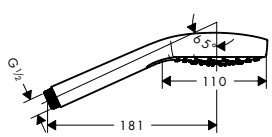

Croma E Hand shower 1jet · shower head size: 110 mm · spray type: Rain · easy cleanable plastic spray disc, spray disc surface: white · maximum flow rate at 3 bar: 16 l/min · minimum flow pressure: 1 bar · with internal water conduction · rinseable screen seal · connection thread G ½ · connection dimension: DN15 · suitable for continous flow water heaters	Brushed Bronze Brushed Black Chrome White/Chrome Matt Black Matt White Polished Gold Optic	26814140 26814340 26814400 26814670 26814700 26814990	56.80 56.80 37.80 52.90 52.90 56.80
Water saving EcoSmart version: · **Croma E** Hand shower 1jet EcoSmart 9 l/min	Brushed Bronze Brushed Black Chrome White/Chrome Matt Black Matt White Polished Gold Optic	26815140 26815340 26815400 26815670 26815700 26815990	56.80 56.80 37.80 52.90 52.90 56.80
· **Croma E** Hand shower 1jet EcoSmart 7 l/min	White/Chrome	26816400	37.80

Measurements within scale drawings are in mm.

Technical specifications and units of measure are subject to change.

Croma Select S



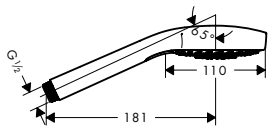

		finish	code no.	Euro
Croma Select S Hand shower Multi · shower head size: 110 mm · spray type: SoftRain, IntenseRain, Massage spray · convenient diversion via Select button · easy cleanable plastic spray disc, spray disc surface: white · maximum flow rate at 3 bar: 16 l/ min · minimum flow pressure: 1 bar · with internal water conduction · rinseable screen seal · connection thread G ½ · connection dimension: DN15 · suitable for continous flow water heaters		White/Chrome	26800400	65.90
Water saving EcoSmart version: · **Croma Select S** Hand shower Multi EcoSmart 9 l/ min		White/Chrome	26801400	65.90



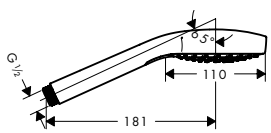

		finish	code no.	Euro
Croma Select S Hand shower Vario · shower head size: 110 mm · spray type: Rain, IntenseRain, TurboRain · convenient diversion via Select button · easy cleanable plastic spray disc, spray disc surface: white · maximum flow rate at 3 bar: 14,7 l/ min · minimum flow pressure: 1 bar · with internal water conduction · rinseable screen seal · connection thread G ½ · connection dimension: DN15 · suitable for continous flow water heaters		White/Chrome	26802400	50.30
Water saving EcoSmart version: · **Croma Select S** Hand shower Vario EcoSmart 9 l/ min		White/Chrome	26803400	50.30

Croma S



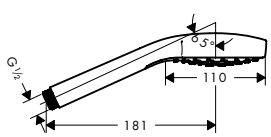

		finish	code no.	Euro
Croma S Hand shower 1jet · shower head size: 110 mm · spray type: Rain · easy cleanable plastic spray disc, spray disc surface: white · maximum flow rate at 3 bar: 16 l/ min · minimum flow pressure: 0,08 MPa (hydrodynamic pressure) · with internal water conduction · rinseable screen seal · connection thread G ½ · connection dimension: DN15 · suitable for continous flow water heaters		White/Chrome	26804400	37.80
Water saving EcoSmart version: · **Croma S** Hand shower 1jet EcoSmart 9 l/ min		White/Chrome	26805400	37.80
· **Croma S** Hand shower 1jet EcoSmart 7 l/ min		White/Chrome	26806400	37.80

Measurements within scale drawings are in mm.

Technical specifications and units of measure are subject to change.

Croma 100

	finish	code no.	Euro
Croma 100 Hand shower Multi · shower head size: 100 mm · spray type: Rain, MonoRain, Massage spray · spray type adjustment by turning spray disc · grey spray disc · maximum flow rate at 3 bar: 19 l/min · minimum flow pressure: 1,2 bar · with internal water conduction · rinseable screen seal · connection thread G ½ · connection dimension: DN15 · suitable for continous flow water heaters	Chrome	28536000	67.70
Water saving EcoSmart version: · **Croma 100** Hand shower Multi EcoSmart 9 l/min	Chrome	28538000	72.60
Croma 100 Hand shower Vario · shower head size: 100 mm · spray type: Rain, normal spray, Shampoo spray, Massage spray · spray type adjustment by turning spray disc · grey spray disc · maximum flow rate at 3 bar: 18 l/min · minimum flow pressure: 1 bar · with internal water conduction · rinseable screen seal · connection thread G ½ · connection dimension: DN15 · suitable for continous flow water heaters	Chrome	28535000	38.10
Water saving EcoSmart version: · **Croma 100** Hand shower Vario EcoSmart 9 l/min	Chrome	28537000	43.20
Croma 100 Hand shower 1jet · shower head size: 100 mm · spray type: Rain · grey spray disc · maximum flow rate at 3 bar: 16 l/min · minimum flow pressure: 1 bar · with internal water conduction · rinseable screen seal · connection thread G ½ · connection dimension: DN15 · suitable for continous flow water heaters	Chrome	28580000	31.10
Water saving EcoSmart version: · **Croma 100** Hand shower Mono EcoSmart 9 l/min	Chrome	28583000	36.30

Croma 100 Classic

Croma 100 Classic Hand shower Multi · shower head size: 114 mm · spray type: Rain, MonoRain, Massage spray · spray type adjustment by turning spray disc · grey spray disc · maximum flow rate at 3 bar: 19 l/min · minimum flow pressure: 1,2 bar · with internal water conduction · rinseable screen seal · connection thread G ½ · connection dimension: DN15 · suitable for continous flow water heaters	Chrome	28539000	82.50

Measurements within scale drawings are in mm.

Technical specifications and units of measure are subject to change.

Crometta



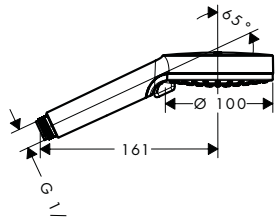

	finish	code no.	Euro
Crometta Hand shower Vario · shower head size: 100 mm · spray type: Rain, IntenseRain · spray type adjustment by turning spray disc · easy cleanable plastic spray disc · maximum flow rate at 3 bar: 13,8 l/min · minimum flow pressure: 1 bar · with internal water conduction · rinseable screen seal · connection thread G ½ · connection dimension: DN15 · suitable for continous flow water heaters	White/Chrome	26330400	21.20
Water saving EcoSmart version:			
· **Crometta** Hand shower Vario EcoSmart 9 l/min	White/Chrome	26332400	23.40
· **Crometta** Hand shower Vario Green 6 l/min	White/Chrome	26336400	23.40



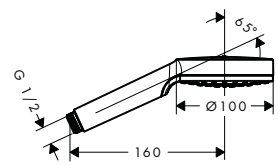

	finish	code no.	Euro
Crometta Hand shower 1jet · shower head size: 100 mm · spray type: Rain · easy cleanable plastic spray disc · maximum flow rate at 3 bar: 14 l/min · minimum flow pressure: 1 bar · with internal water conduction · rinseable screen seal · connection thread G ½ · connection dimension: DN15 · suitable for continous flow water heaters	White/Chrome	26331400	18.80
Water saving EcoSmart version:			
· **Crometta** Hand shower 1jet EcoSmart 9 l/min	White/Chrome	26333400	21.20
· **Crometta** Hand shower 1jet Green 6 l/min	White/Chrome	26334400	21.20

Crometta 85



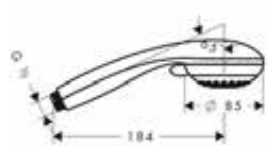

	finish	code no.	Euro
Crometta 85 Hand shower Multi · shower head size: 85 mm · spray type: normal spray, Massage spray, MonoRain · spray type adjustment by turning spray disc · grey spray disc · maximum flow rate at 3 bar: 16 l/min · minimum flow pressure: 1 bar · with internal water conduction · rinseable screen seal · connection thread G ½ · connection dimension: DN15 · suitable for continous flow water heaters	Chrome	28563000	40.30

Measurements within scale drawings are in mm.

	finish	code no.	Euro
Crometta 85 Hand shower Vario	Chrome	28562000	22.90



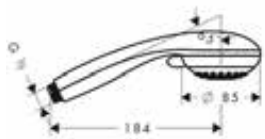

- shower head size: 85 mm
- spray type: normal spray, Vario spray
- spray type adjustment by turning spray disc
- grey spray disc
- maximum flow rate at 3 bar: 17 l/min
- minimum flow pressure: 1 bar
- rinseable screen seal
- connection thread G ½
- connection dimension: DN15
- suitable for continous flow water heaters

Quick Clean

Crometta 85 Hand shower Mono	Chrome	28585000	18.80



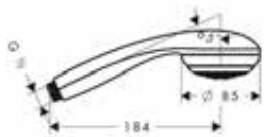

- shower head size: 85 mm
- spray type: normal spray
- grey spray disc
- maximum flow rate at 3 bar: 16 l/min
- minimum flow pressure: 1 bar
- with internal water conduction
- rinseable screen seal
- connection thread G ½
- connection dimension: DN15
- suitable for continous flow water heaters

Quick Clean

Water saving EcoSmart version:

Crometta 85 Hand shower Mono Green 6 l/min	Chrome	28561000	29.70

Vernis Blend

NEW



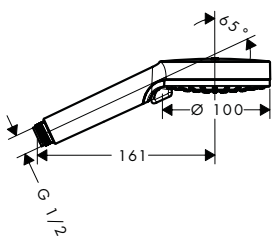

Vernis Blend Hand shower Vario	Chrome Matt Black	26270000 26270670	19.50 27.30

- shower head size: 100 mm
- spray type: Rain, IntenseRain
- spray type adjustment by turning spray disc
- easy cleanable plastic spray disc
- maximum flow rate at 3 bar: 15,2 l/min
- minimum flow pressure: 1 bar
- with internal water conduction
- rinseable screen seal
- connection thread G ½
- connection dimension: DN15
- suitable for continous flow water heaters

Quick Clean

XXL Performance

Water saving EcoSmart version:

NEW **Vernis Blend** Hand shower Vario EcoSmart	Chrome Matt Black	26340000 26340670	19.50 27.30
NEW **Vernis Blend** Hand shower Vario Green	Chrome	26090000	19.50

Measurements within scale drawings are in mm.

Technical specifications and units of measure are subject to change.

	finish	code no.	Euro

NEW

12x



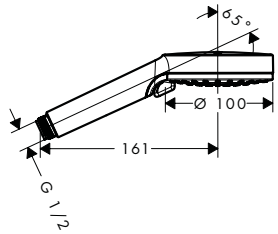

NEW

Vernis Blend Hand shower Vario project pack (12 pcs.)

Chrome | 26085000 | 229.00

Quick Clean | XXL Performance

- shower head size: 100 mm
- spray type: Rain, IntenseRain
- spray type adjustment by turning spray disc
- easy cleanable plastic spray disc
- maximum flow rate at 3 bar: 15,2 l/min
- minimum flow pressure: 1 bar
- with internal water conduction
- rinseable screen seal
- connection thread G ½
- connection dimension: DN15
- suitable for continous flow water heaters
- packaging unit: 12 pieces

Consisting of:

- **Vernis Blend** Hand shower Vario (# 26270000)

Jocolino

NEW



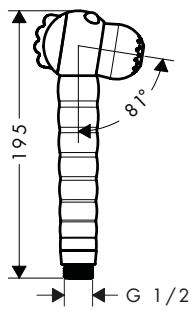

Jocolino Children hand shower crocodile 2jet

28788570 | 50.00

Quick Clean

- spray type: Rain, MonoRain
- switch spray type by turning the shower head
- maximum flow rate at 3 bar: 11 l/min
- flow rate Mono spray (at 3 bar): 9,1 l/min
- flow rate Rain spray (at 3 bar): 11 l/min
- ergonomic handle perfect for smaller hands
- googly eyes that interact with the kid
- limescale residues on the jets are removed by the rotation when changing spray modes
- with internal water conduction
- rinseable screen seal
- connection thread G ½

Optional parts:

- Quick-coupling set — Black | 28346000 | 12.20

NEW



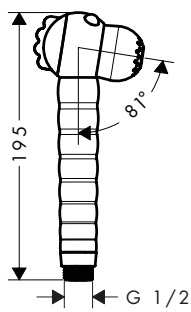

Jocolino Children hand shower lion 2jet

28760210 | 50.00

Quick Clean

- spray type: Rain, MonoRain
- switch spray type by turning the shower head
- maximum flow rate at 3 bar: 11 l/min
- flow rate Mono spray (at 3 bar): 9,1 l/min
- flow rate Rain spray (at 3 bar): 11 l/min
- ergonomic handle perfect for smaller hands
- googly eyes that interact with the kid
- limescale residues on the jets are removed by the rotation when changing spray modes
- with internal water conduction
- rinseable screen seal
- connection thread G ½

Optional parts:

- Quick-coupling set — Black | 28346000 | 12.20

Measurements within scale drawings are in mm.

	finish	code no.	Euro



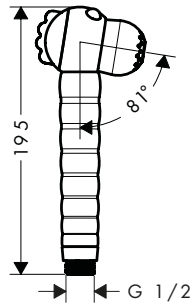

Jocolino Children hand shower zebra 2jet — 28787640 — 50.00

Quick Clean

- spray type: Rain, MonoRain
- switch spray type by turning the shower head
- maximum flow rate at 3 bar: 11 l/min
- flow rate Mono spray (at 3 bar): 9,1 l/min
- flow rate Rain spray (at 3 bar): 11 l/min
- ergonomic handle perfect for smaller hands
- googly eyes that interact with the kid
- limescale residues on the jets are removed by the rotation when changing spray modes
- with internal water conduction
- rinseable screen seal
- connection thread G ½

Optional parts:

- Quick-coupling set — Black — 28346000 — 12.20

DogShower



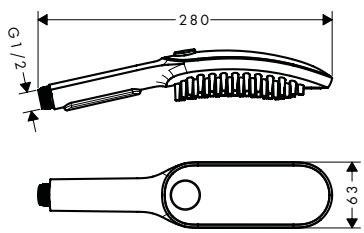

DogShower Dogs hand shower 150 3jet Select

Sky Blue	26640540	87.00
Pink	26640560	87.00
Matt Black	26640670	87.00
Matt White	26640700	87.00

Select · Water Boost · EcoSmart

- shower head size: 150 x 63 mm
- spray type: fur spray, leg spray, paw spray
- spray type alternation: convenient diversion via Select button
- maximum flow rate at 3 bar: 7,6 l/min
- minimum function point for proper function in l/min: 5,7 l/min
- operating pressure: min. 0.2 MPa/ max. 0.6 MPa
- minimum flow pressure: 1 bar
- elongated, brush-like nozzles (1,5 cm) for thorough cleaning with massage effect
- ergonomic design
- Water Boost: boost function to increase waterflow when needed
- connection dimension: DN15
- rinseable screen seal

Optional parts:

- Quick-coupling set — Black — 28346000 — 12.20



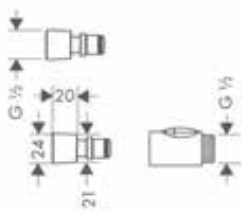

Quick-coupling set — Black — 28346000 — 12.20

- enables quick and easy changing of hand showers
- material: plastic
- connection dimension DN15

Measurements within scale drawings are in mm.

Technical specifications and units of measure are subject to change.

Bidette



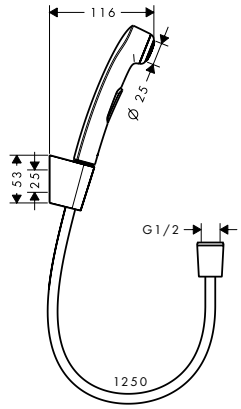

	finish	code no.	Euro
Bidette hand shower 1jet with shower holder and pressure shower hose 125 cm · consists of: bidette hand shower, shower holder, chrome-colored shower hose · maximum flow rate at 3 bar: 6 l/ min · minimum flow pressure: 1 bar · with non-return valve · we recommend using this product with a shut-off valve in the line · Shower holder of plastic **Consisting of:** · Shower holder Porter S (# 28331000)	Chrome	32129000	86.40
Alternative sizes: · Bidette hand shower 1jet with shower holder and pressure shower hose 160 cm	Chrome	32128000	88.30



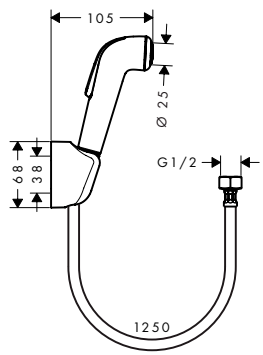

	finish	code no.	Euro
Bidette hand shower 1jet with shower holder and pressure resistant shower hose 125 cm · consists of: bidette hand shower, shower holder, chrome-colored shower hose · maximum flow rate at 3 bar: 6 l/ min · with non-return valve · we recommend using this product with a shut-off valve in the line · additional comment: surface shower hose chrome **Consisting of:** · Shower holder (# 28321000)	White/Chrome	32127000	49.20
Alternative sizes: · Bidette hand shower 1jet with shower holder and pressure resistant shower hose 160 cm	White/Chrome	32122000	51.90

Measurements within scale drawings are in mm.

Technical specifications and units of measure are subject to change.

Shower sets / Shower bars / Shower holder



Shower sets	page 110		Shower sets with thermostatic mixer for exposed installation	page 140	
Wall bars	page 147		Shower holder sets	page 154	
Shower holder	page 163		Fixfit wall outlets	page 164	

Rainfinity shower sets



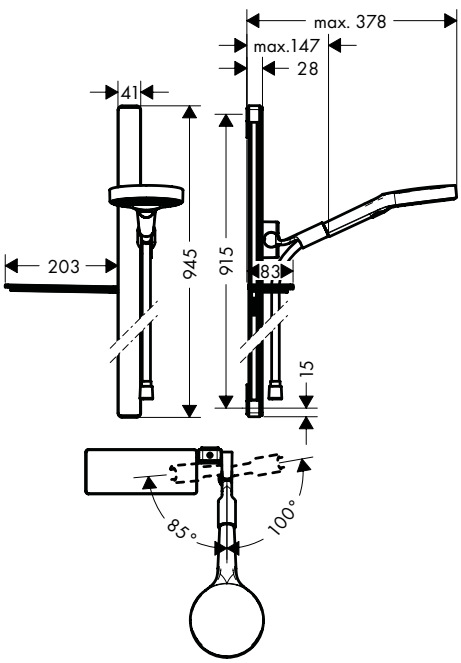

	finish	code no.	Euro
Rainfinity Shower set 130 3jet with shower bar 90 cm and shelf · consists of: hand shower, shower bar, shelf, shower hose, slider · shower head size: 130 mm · spray type: PowderRain, Intense PowderRain, MonoRain · convenient diversion via Select button · shelf made of safety glass · 90° position adjustable hand shower holder, pivots left and right, up and down · maximum flow rate at 3 bar: 14 l/min · minimum flow pressure: 1 bar · pivot connector prevent hose from tangling · wall mounting: screw fastening · wall supports of plastic · wall bar type: flat aluminium profile with safety glass finish · 41 mm width of shower bar · profile stand pipe: square · finish: chrome	Chrome	27671000	374.00
Consisting of: · **Rainfinity** Hand shower 130 3jet (# 26864000) · **Isiflex** Shower hose 160 cm (# 28276000) · **Casetta** Soap dish/ shelf E (# 26511000)			
Alternative sizes: · **Rainfinity** Shower set 130 3jet with shower bar 150 cm and shelves	Chrome	27673000	482.30
Water saving EcoSmart version: · **Rainfinity** Shower set 130 3jet EcoSmart with shower bar 90 cm and soap dish	Chrome	27672000	374.00

Measurements within scale drawings are in mm.

Technical specifications and units of measure are subject to change.



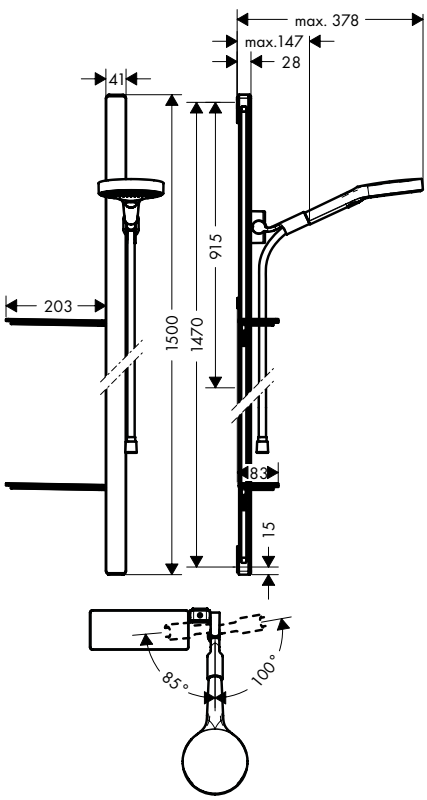

	finish	code no.	Euro
Rainfinity Shower set 130 3jet with shower bar 150 cm and shelves	Chrome	27673000	482.30

· consists of: hand shower, shower bar, shower hose, slider, shelves
· shower head size: 130 mm
· spray type: PowderRain, Intense PowderRain, MonoRain
· convenient diversion via Select button
· shelf made of safety glass
· 90° position adjustable hand shower holder, pivots left and right, up and down
· maximum flow rate at 3 bar: 14 l/ min
· minimum flow pressure: 1 bar
· pivot connector prevent hose from tangling
· wall mounting: screw fastening
· wall supports of plastic
· wall bar type: flat aluminium profile with safety glass finish
· 41 mm width of shower bar
· profile stand pipe: square
· finish: chrome

Consisting of:
· **Rainfinity** Hand shower 130 3jet (# 26864000)
· **Isiflex** Shower hose 160 cm (# 28276000)
· **Casetta** Soap dish/ shelf E (# 26511000)

Alternative sizes:

· **Rainfinity** Shower set 130 3jet with shower bar 90 cm and shelf	Chrome	27671000	374.00

Water saving EcoSmart version:

· **Rainfinity** Shower set 130 3jet EcoSmart with shower bar 150 cm and soap dishes	Chrome	27674000	482.30

Measurements within scale drawings are in mm.

Raindance Select E shower sets



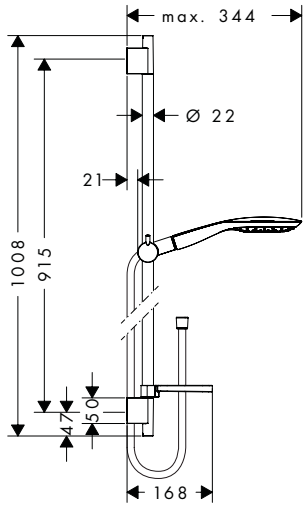

	finish	code no.	Euro
Raindance Select E Shower set 150 3jet with shower bar 90 cm and soap dish	Chrome	27857000	244.10

Select · AirPower · Quick Clean · XXL Performance

- consists of: hand shower, shower bar, shower hose, slider, soap dish
- shower head size: 150 mm
- spray type: RainAir, CaresseAir, Mix
- convenient diversion via Select button
- 90° position adjustable hand shower holder, pivots left and right, up and down
- maximum flow rate at 3 bar: 16,4 l/min
- minimum flow pressure: 1 bar
- pivot connector prevent hose from tangling
- wall mounting: screw fastening
- wall supports of plastic
- shower bar diameter: 22 mm
- profile stand pipe: round

Consisting of:
- **Raindance Select E** Hand shower 150 3jet (# 26550000)
- **Unica** Shower bar S Puro 90 cm with Isiflex shower hose 160 cm (# 28631000)
- **Casetta** Soap dish E (# 26519000)

Alternative sizes:

Raindance Select E Shower set 150 3jet with shower bar 65 cm and soap dish	Chrome	27856000	236.20

Optional parts:

Wall bar spacer	Chrome	97450000	8.70



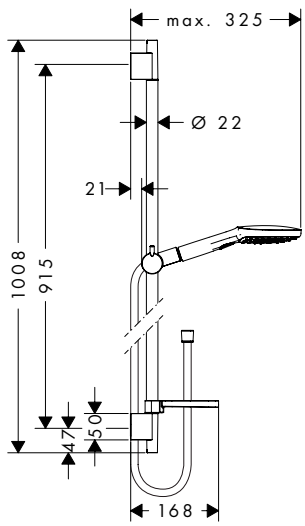

	finish	code no.	Euro
Raindance Select E Shower set 120 3jet with shower bar 90 cm and soap dish	Chrome	26621000	199.10
	White/Chrome	26621400	199.10

Select · AirPower · Quick Clean · XXL Performance

- consists of: hand shower, shower bar, shower hose, slider, soap dish
- shower head size: 120 mm
- spray type: RainAir, Rain, Whirl
- convenient diversion via Select button
- 90° position adjustable hand shower holder, pivots left and right, up and down
- maximum flow rate at 3 bar: 14,4 l/min
- minimum flow pressure: 1 bar
- pivot connector prevent hose from tangling
- wall mounting: screw fastening
- wall supports of plastic
- shower bar diameter: 22 mm
- profile stand pipe: round

Consisting of:
- **Raindance Select E** Hand shower 120 3jet (# 26520XXX)
- **Unica** Shower bar S Puro 90 cm with Isiflex shower hose 160 cm (# 28631000)
- **Casetta** Soap dish E (# 26519000)

Alternative sizes:

Raindance Select E Shower set 120 3jet with shower bar 65 cm and soap dish	Chrome	26620000	192.60
	White/Chrome	26620400	192.60

Water saving EcoSmart version:

Raindance Select E Shower set 120 3jet EcoSmart 9 l/min with shower bar 90 cm and soap dish	Chrome	26623000	199.10
	White/Chrome	26623400	199.10

Optional parts:

Wall bar spacer	Chrome	97450000	8.70

Measurements within scale drawings are in mm.

Technical specifications and units of measure are subject to change.

	finish	code no.	Euro



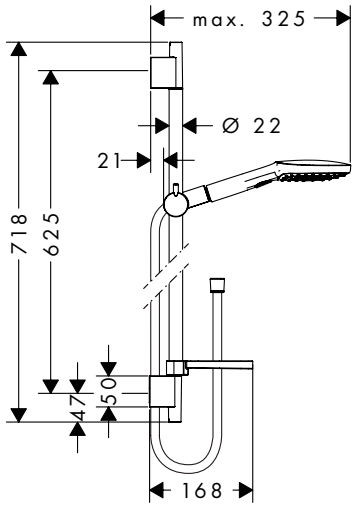

Raindance Select E Shower set 120 3jet with shower bar 65 cm and soap dish

	Chrome	26620000	192.60
	White/Chrome	26620400	192.60

Select · AirPower · Quick Clean · XXL Performance

- consists of: hand shower, shower bar, shower hose, slider, soap dish
- shower head size: 120 mm
- spray type: Rain, RainAir, Whirl
- convenient diversion via Select button
- 90° position adjustable hand shower holder, pivots left and right, up and down
- maximum flow rate at 3 bar: 14,4 l/min
- minimum flow pressure: 1 bar
- pivot connector prevent hose from tangling
- wall mounting: screw fastening
- wall supports of plastic
- shower bar diameter: 22 mm
- profile stand pipe: round

Consisting of:
- **Raindance Select E** Hand shower 120 3jet (# 26520XXX)
- **Unica** Shower bar S Puro 65 cm with Isiflex shower hose 160 cm (# 28632000)
- **Casetta** Soap dish E (# 26519000)

Alternative sizes:

· **Raindance Select E** Shower set 120 3jet with shower bar 90 cm and soap dish	Chrome	26621000	199.10
	White/Chrome	26621400	199.10

Water saving EcoSmart version:

· **Raindance Select E** Shower set 120 3jet EcoSmart 9 l/min with shower bar 65 cm and soap dish	Chrome	26622000	192.60
	White/Chrome	26622400	192.60

Optional parts:

· Wall bar spacer	Chrome	97450000	8.70

Raindance Select S shower sets





Raindance Select S Shower set 150 3jet with shower bar 90 cm

	Chrome	26626000	358.10
	White/Chrome	26626400	358.10

Select · AirPower · Quick Clean · XXL Performance

- consists of: hand shower, shower bar, shower hose, slider
- shower head size: 150 mm
- spray type: RainAir, CaresseAir, Mix
- convenient diversion via Select button
- 90° position adjustable hand shower holder, pivots left and right, up and down
- maximum flow rate at 3 bar: 16,4 l/min
- minimum flow pressure: 1 bar
- pivot connector prevent hose from tangling
- wall mounting: screw fastening
- 23 mm width of shower bar
- profile stand pipe: square

Consisting of:
- **Raindance Select S** Hand shower 150 3jet (# 28587XXX)
- **Unica** Shower bar Raindance 90 cm with Isiflex shower hose 160 cm (# 27636000)

Optional parts:

· **Raindance** Corner fitting set		28694000	35.00
· **Raindance** Wall bar spacer	Chrome	98993000	8.20

Measurements within scale drawings are in mm.

Technical specifications and units of measure are subject to change.



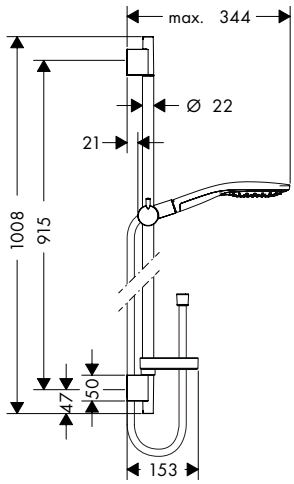

Raindance Select S Shower set 150 3jet with shower bar 90 cm and soap dish

- consists of: hand shower, shower bar, shower hose, slider, soap dish
- shower head size: 150 mm
- spray type: RainAir, CaresseAir, Mix
- convenient diversion via Select button
- 90° position adjustable hand shower holder, pivots left and right, up and down
- maximum flow rate at 3 bar: 16 l/min
- minimum flow pressure: 1 bar
- pivot connector prevent hose from tangling
- wall mounting: screw fastening
- wall supports of plastic
- shower bar diameter: 22 mm
- profile stand pipe: round

Consisting of:
- **Raindance Select S** Hand shower 150 3jet (# 28587XXX)
- **Unica** Shower bar S Puro 90 cm with Isiflex shower hose 160 cm (# 28631000)
- **Casetta** Soap dish S Puro (# 28679000)

	finish	code no.	Euro
	Chrome	27803000	242.60
	White/Chrome	27803400	242.60
Alternative sizes:			
· **Raindance Select S** Shower set 150 3jet with shower bar 65 cm and soap dish	Chrome	27802000	235.20
Optional parts:			
· Wall bar spacer	Chrome	97450000	8.70



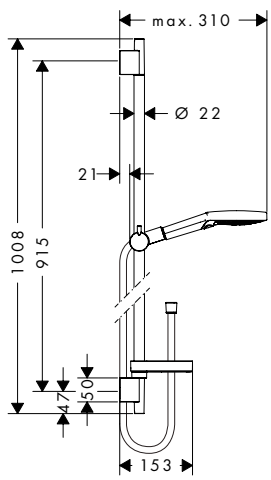

Raindance Select S Shower set 120 3jet PowderRain with shower bar 90 cm

- consists of: hand shower, shower bar, shower hose, slider, soap dish
- shower head size: 125 mm
- spray type: PowderRain, Rain, Whirl
- convenient diversion via Select button
- 90° position adjustable hand shower holder, pivots left and right, up and down
- maximum flow rate at 3 bar: 11 l/min
- minimum flow pressure: 1 bar
- pivot connector prevent hose from tangling
- wall mounting: screw fastening
- wall supports of plastic
- shower bar diameter: 22 mm
- profile stand pipe: round

Consisting of:
- **Raindance Select S** Hand shower 120 3jet PowderRain (# 26014000)
- **Unica** Shower bar S Puro 90 cm with Isiflex shower hose 160 cm (# 28631000)
- **Casetta** Soap dish S Puro (# 28679000)

	finish	code no.	Euro
	Chrome	27667000	203.10
Alternative sizes:			
· **Raindance Select S** Shower set 120 3jet PowderRain with shower bar 65 cm	Chrome	27654000	196.60
Optional parts:			
· Wall bar spacer	Chrome	97450000	8.70

Measurements within scale drawings are in mm.

Technical specifications and units of measure are subject to change.



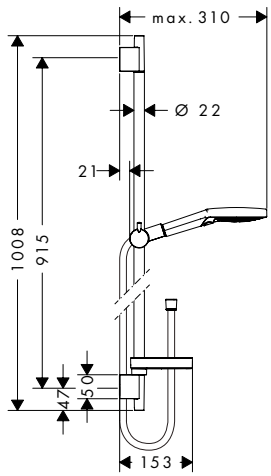

Raindance Select S Shower set 120 3jet with shower bar 90 cm and soap dish

- consists of: hand shower, shower bar, shower hose, slider, soap dish
- shower head size: 125 mm
- spray type: Rain, RainAir, Whirl
- convenient diversion via Select button
- 90° position adjustable hand shower holder, pivots left and right, up and down
- maximum flow rate at 3 bar: 15 l/min
- minimum flow pressure: 1 bar
- pivot connector prevent hose from tangling
- wall mounting: screw fastening
- wall supports of plastic
- shower bar diameter: 22 mm
- profile stand pipe: round

Consisting of:
- **Raindance Select S** Hand shower 120 3jet (# 26530XXX)
- **Unica** Shower bar S Puro 90 cm with Isiflex shower hose 160 cm (# 28631000)
- **Casetta** Soap dish S Puro (# 28679000)

	finish	code no.	Euro
	Chrome	26631000	199.10
	White/Chrome	26631400	199.10

Alternative sizes:

· **Raindance Select S** Shower set 120 3jet with shower bar 65 cm and soap dish	Chrome	26630000	192.60
	White/Chrome	26630400	192.60

Water saving EcoSmart version:

· **Raindance Select S** Shower set 120 3jet EcoSmart 9 l/min with shower bar 90 cm and soap dish	Chrome	26633000	199.10

Optional parts:

· Wall bar spacer	Chrome	97450000	8.70



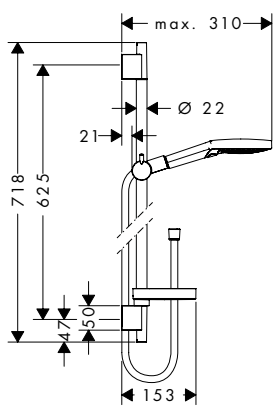

Raindance Select S Shower set 120 3jet with shower bar 65 cm and soap dish

- consists of: hand shower, shower bar, shower hose, slider, soap dish
- shower head size: 125 mm
- spray type: Rain, RainAir, Whirl
- convenient diversion via Select button
- 90° position adjustable hand shower holder, pivots left and right, up and down
- maximum flow rate at 3 bar: 15 l/min
- minimum flow pressure: 1 bar
- pivot connector prevent hose from tangling
- wall mounting: screw fastening
- wall supports of plastic
- shower bar diameter: 22 mm
- profile stand pipe: round

Consisting of:
- **Raindance Select S** Hand shower 120 3jet (# 26530XXX)
- **Unica** Shower bar S Puro 65 cm with Isiflex shower hose 160 cm (# 28632000)
- **Casetta** Soap dish S Puro (# 28679000)

	finish	code no.	Euro
	Chrome	26630000	192.60
	White/Chrome	26630400	192.60

Alternative sizes:

· **Raindance Select S** Shower set 120 3jet with shower bar 90 cm and soap dish	Chrome	26631000	199.10
	White/Chrome	26631400	199.10

Water saving EcoSmart version:

· **Raindance Select S** Shower set 120 3jet EcoSmart 9 l/min with shower bar 65 cm and soap dish	Chrome	26632000	192.60

Optional parts:

· Wall bar spacer	Chrome	97450000	8.70

Measurements within scale drawings are in mm.

Technical specifications and units of measure are subject to change.

Raindance E shower sets



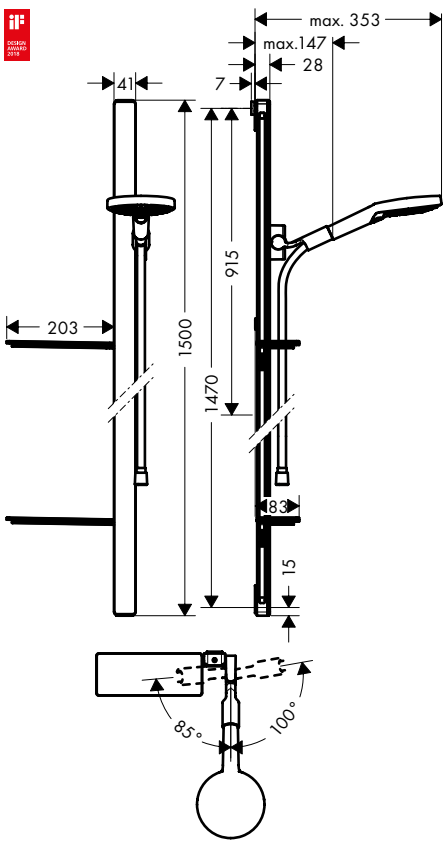

	finish	code no.	Euro
Raindance Select S Shower set 120 3jet with shower bar 150 cm and soap dishes	Chrome	27646000	491.20

Select · AirPower · Quick Clean · XXL Performance

- consists of: hand shower, shower bar, shower hose, slider, soap dishes
- shower head size: 125 mm
- spray type: Rain, RainAir, Whirl
- convenient diversion via Select button
- shelf made of safety glass
- 90° position adjustable hand shower holder, pivots left and right, up and down
- maximum flow rate at 3 bar: 15 l/min
- minimum flow pressure: 1 bar
- pivot connector prevent hose from tangling
- wall mounting: screw fastening
- wall supports of plastic
- wall bar type: flat aluminium profile with safety glass finish
- 41 mm width of shower bar
- profile stand pipe: square

Consisting of:

- **Raindance Select S** Hand shower 120 3jet (# 26530000)
- **Unica** Shower bar E 150 cm with Isiflex shower hose 160 cm and shelves (# 27645000)
- **Casetta** Soap dish/ shelf E (# 26511000)

Alternative sizes:

· **Raindance Select S** Shower set 120 3jet with shower bar 90 cm and soap dish	Chrome	27648000	376.90
	White/Chrome	27648400	376.90

Measurements within scale drawings are in mm.

Technical specifications and units of measure are subject to change.



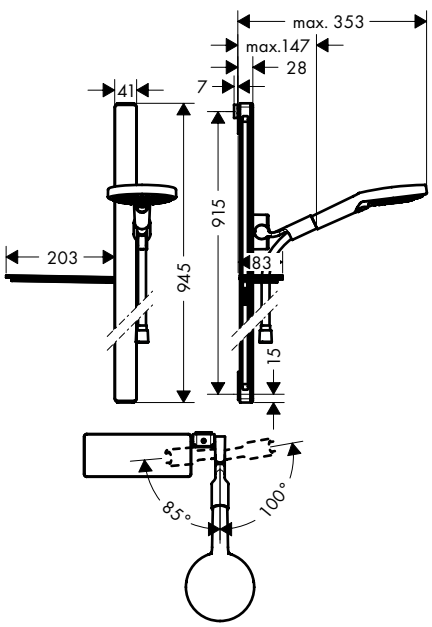

	finish	code no.	Euro
Raindance Select S Shower set 120 3jet with shower bar 90 cm and soap dish	Chrome	27648000	376.90
	White/Chrome	27648400	376.90

Select · AirPower · Quick Clean · XXL Performance

- consists of: hand shower, shower bar, shower hose, slider, soap dish
- shower head size: 125 mm
- spray type: Rain, RainAir, Whirl
- convenient diversion via Select button
- shelf made of safety glass
- 90° position adjustable hand shower holder, pivots left and right, up and down
- maximum flow rate at 3 bar: 15 l/min
- minimum flow pressure: 1 bar
- pivot connector prevent hose from tangling
- wall mounting: screw fastening
- wall supports of plastic
- wall bar type: flat aluminium profile with safety glass finish
- 41 mm width of shower bar
- profile stand pipe: square
- finish: chrome or white

Consisting of:

- **Raindance Select S** Hand shower 120 3jet (# 26530XXX)
- **Unica** Shower bar E 90 cm with Isiflex shower hose 160 cm (# 27640XXX)
- **Casetta** Soap dish/ shelf E (# 26511XXX)

Alternative sizes:

· **Raindance Select S** Shower set 120 3jet with shower bar 150 cm and soap dishes	Chrome	27646000	491.20

Water saving EcoSmart version:

· **Raindance Select S** Shower set 120 3jet EcoSmart 9 l/min with shower bar 90 cm and soap dish	Chrome	27649000	376.90

Measurements within scale drawings are in mm.

Technical specifications and units of measure are subject to change.

Unica Comfort shower sets



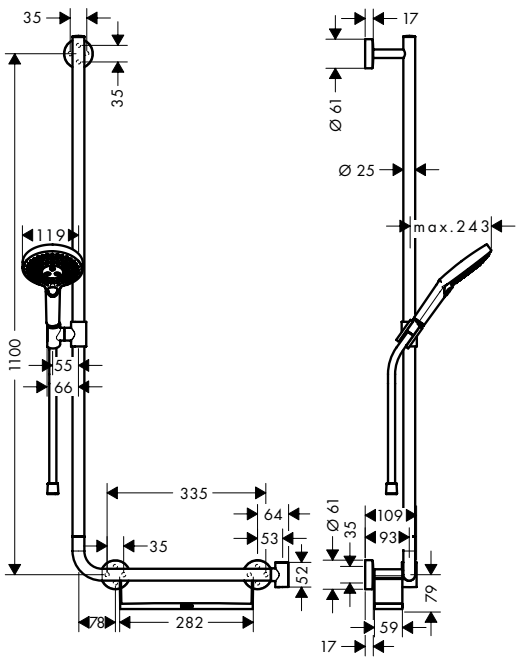

	finish	code no.	Euro
Raindance Select S Shower set 120 3jet with shower bar 110 cm left	Chrome	26324000	412.60

Select · AirPower · Quick Clean · XXL Performance

- consists of: hand shower, shower bar, storage basket, shower hose, slider
- shower head size: 125 mm
- spray type: RainAir, Rain, Whirl
- convenient diversion via Select button
- shelf made of plastic, finish white
- shelf can be removed for cleaning
- 90° position adjustable hand shower holder, pivots left and right, up and down
- maximum flow rate at 3 bar: 15 l/min
- minimum flow pressure: 1 bar
- pivot connector prevent hose from tangling
- wall mounting: screw fastening
- wall supports of metal
- wallbar could be also used as grab bar - load capacity of 200 kg
- stand pipe length: 1100 mm
- shower bar diameter: 25 mm
- profile stand pipe: round
- shower holder can be removed
- metal hand shower holder

Consisting of:
- **Raindance Select S** Hand shower 120 3jet (# 26530000)
- **Unica** Shower bar Comfort 110 cm left (# 26403400)
- **Isiflex** Shower hose 160 cm (# 28276000)

Alternative sizes:

· **Raindance Select S** Shower set 120 3jet with shower bar 110 cm right	Chrome	26326000	412.60

Optional parts:

· **Unica** Foot support Comfort	Chrome	26329000	153.30

Measurements within scale drawings are in mm.

Technical specifications and units of measure are subject to change.



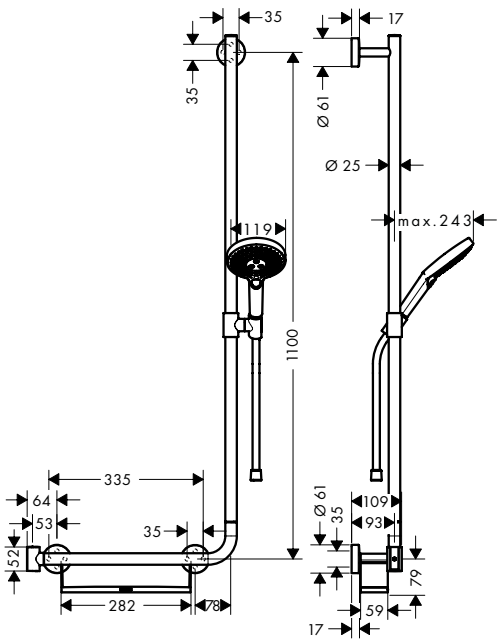

	finish	code no.	Euro
Raindance Select S Shower set 120 3jet with shower bar 110 cm right	Chrome	26326000	412.60

Select · AirPower · Quick Clean · XXL Performance

- consists of: hand shower, shower bar, storage basket, shower hose, slider
- shower head size: 125 mm
- spray type: RainAir, Rain, Whirl
- convenient diversion via Select button
- shelf made of plastic, finish white
- shelf can be removed for cleaning
- 90° position adjustable hand shower holder, pivots left and right, up and down
- maximum flow rate at 3 bar: 15 l/ min
- minimum flow pressure: 1 bar
- pivot connector prevent hose from tangling
- wall mounting: screw fastening
- wall supports of metal
- wallbar could be also used as grab bar - load capacity of 200 kg
- stand pipe length: 1100 mm
- shower bar diameter: 25 mm
- profile stand pipe: round
- shower holder can be removed
- metal hand shower holder

Consisting of:
- **Unica** Shower bar Comfort 110 cm right (# 26404400)
- **Raindance Select S** Hand shower 120 3jet (# 26530000)
- **Isiflex** Shower hose 160 cm (# 28276000)

Alternative sizes:

Raindance Select S Shower set 120 3jet with shower bar 110 cm left	Chrome	26324000	412.60

Optional parts:

Unica Foot support Comfort	Chrome	26329000	153.30

Measurements within scale drawings are in mm.



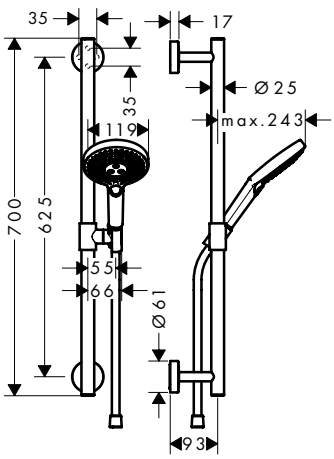

	finish	code no.	Euro
Raindance Select S Shower set 120 3jet with shower bar 65 cm	Chrome	26320000	282.90

Select · AirPower · Quick Clean · XXL Performance

- consists of: hand shower, shower bar, shower hose, slider
- shower head size: 125 mm
- spray type: Rain, RainAir, Whirl
- convenient diversion via Select button
- 90° position adjustable hand shower holder, pivots left and right, up and down
- maximum flow rate at 3 bar: 15 l/min
- minimum flow pressure: 1 bar
- pivot connector prevent hose from tangling
- wall mounting: screw fastening
- wall supports of metal
- wallbar could be also used as grab bar - load capacity of 200 kg
- stand pipe length: 700 mm
- shower bar diameter: 25 mm
- profile stand pipe: round
- metal hand shower holder

Consisting of:

- **Raindance Select S** Hand shower 120 3jet (# 26530000)
- **Unica** Shower bar Comfort 65 cm (# 26401000)
- **Isiflex** Shower hose 160 cm (# 28276000)

Alternative sizes:

· **Raindance Select S** Shower set 120 3jet with shower bar 90 cm	Chrome	26322000	294.70
	White/Chrome	26322400	294.70
· **Raindance Select S** Shower set 120 3jet EcoSmart 9 l/min with shower bar 90 cm	Chrome	26323000	294.70

Optional parts:

· **Unica** Grab handle Comfort with shelf and shower holder	White/Chrome	26328400	149.40
· **Unica** Foot support Comfort	Chrome	26329000	153.30

Measurements within scale drawings are in mm.

Technical specifications and units of measure are subject to change.

Pulsify Select S shower sets

NEW



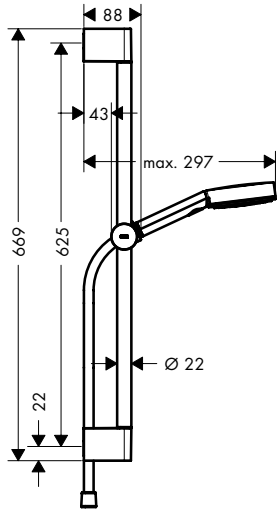

	finish	code no.	Euro
Pulsify Select S Shower set 105 3jet Relaxation with shower bar 65 cm	Chrome	24160000	95.00
	Matt Black	24160670	133.00
	Matt White	24160700	133.00

Push slider · Select · Quick Clean · XXL Performance

- consists of: hand shower, slider, shower bar, shower hose
- shower head size: 105 mm
- spray type: PowderRain, IntenseRain, Massage spray
- convenient diversion via Select button
- maximum flow rate at 3 bar: 11,4 l/min
- minimum flow pressure: 1 bar
- wall supports of plastic
- stand pipe length: 669 mm
- shower bar diameter: 22 mm
- profile stand pipe: round
- drilling distance 625 mm
- height-adjustable slider with locking push-button slider

Consisting of:

NEW
- **Pulsify Select S** Hand shower 105 3jet Relaxation (# 24110XXX)

NEW
- **Unica** Shower bar Pulsify S 65 cm with push slider and Isiflex shower hose 160 cm (# 24400000)

Alternative sizes:

NEW **Pulsify Select S** Shower set 105 3jet Relaxation with shower bar 90 cm

Chrome	24170000	110.00
Matt Black	24170670	154.00
Matt White	24170700	154.00

Water saving EcoSmart version:

NEW **Pulsify Select S** Shower set 105 3jet Relaxation EcoSmart with shower bar 65 cm

Chrome	24161000	95.00
Matt Black	24161670	133.00
Matt White	24161700	133.00

NEW



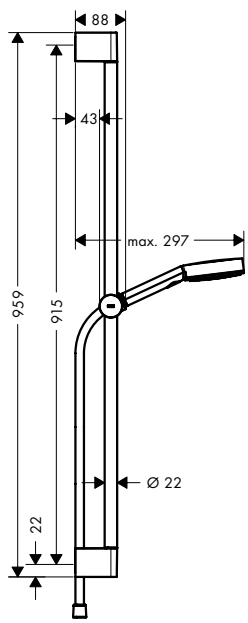

	finish	code no.	Euro
Pulsify Select S Shower set 105 3jet Relaxation with shower bar 90 cm	Chrome	24170000	110.00
	Matt Black	24170670	154.00
	Matt White	24170700	154.00

Push slider · Select · Quick Clean · XXL Performance

- consists of: hand shower, slider, shower bar, shower hose
- shower head size: 105 mm
- spray type: PowderRain, IntenseRain, Massage spray
- convenient diversion via Select button
- maximum flow rate at 3 bar: 11,4 l/min
- minimum flow pressure: 1 bar
- wall supports of plastic
- stand pipe length: 959 mm
- shower bar diameter: 22 mm
- profile stand pipe: round
- drilling distance 915 mm
- height-adjustable slider with locking push-button slider

Consisting of:

NEW
- **Pulsify Select S** Hand shower 105 3jet Relaxation (# 24110XXX)

NEW
- **Unica** Shower bar Pulsify S 90 cm with push slider and Isiflex shower hose 160 cm (# 24401000)

Alternative sizes:

NEW **Pulsify Select S** Shower set 105 3jet Relaxation with shower bar 65 cm

Chrome	24160000	95.00
Matt Black	24160670	133.00
Matt White	24160700	133.00

Water saving EcoSmart version:

NEW **Pulsify Select S** Shower set 105 3jet Relaxation EcoSmart with shower bar 90 cm

Chrome	24171000	110.00
Matt Black	24171670	154.00
Matt White	24171700	154.00

Measurements within scale drawings are in mm.

Technical specifications and units of measure are subject to change.

Croma Select E shower sets

	finish	code no.	Euro



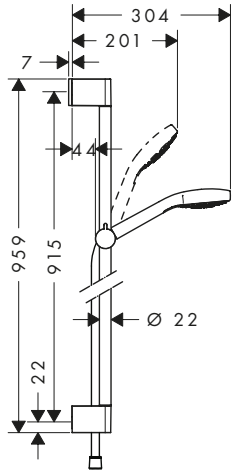

Croma Select E Shower set Multi with shower bar 90 cm

White/Chrome — 26590400 — 133.80

Select · Quick Clean · XXL Performance

- consists of: hand shower, shower bar, shower hose, slider
- shower head size: 110 mm
- spray type: SoftRain, IntenseRain, Massage spray
- convenient diversion via Select button
- hand shower holder inclination angle can be adjusted by 45°
- maximum flow rate at 3 bar: 16 l/min
- minimum flow pressure: 1 bar
- pivot connector prevent hose from tangling
- wall mounting: screw fastening
- wall supports of plastic
- shower bar diameter: 22 mm
- profile stand pipe: round

Consisting of:
- **Croma Select E** Hand shower Multi (# 26810400)
- **Unica** Shower bar Croma 90 cm (# 26506000)
- **Isiflex** Shower hose 160 cm (# 28276000)

Alternative sizes:

· **Croma Select E** Shower set Multi with shower bar 65 cm	White/Chrome	26580400	127.50

Water saving EcoSmart version:

· **Croma Select E** Shower set Multi EcoSmart 9 l/min with shower bar 90 cm	White/Chrome	26591400	133.80

Optional parts:

· Wall bar spacer	Chrome	97450000	8.70



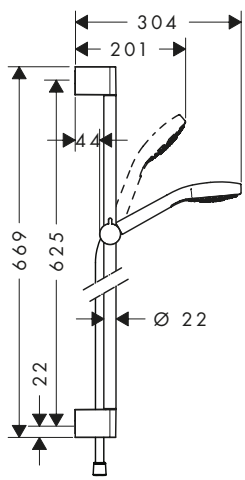

Croma Select E Shower set Multi with shower bar 65 cm

White/Chrome — 26580400 — 127.50

Select · Quick Clean · XXL Performance

- consists of: hand shower, shower bar, shower hose, slider
- shower head size: 110 mm
- spray type: SoftRain, IntenseRain, Massage spray
- convenient diversion via Select button
- hand shower holder inclination angle can be adjusted by 45°
- maximum flow rate at 3 bar: 16 l/min
- minimum flow pressure: 1 bar
- pivot connector prevent hose from tangling
- wall mounting: screw fastening
- wall supports of plastic
- shower bar diameter: 22 mm
- profile stand pipe: round

Consisting of:
- **Croma Select E** Hand shower Multi (# 26810400)
- **Unica** Shower bar Croma 65 cm (# 26505000)
- **Isiflex** Shower hose 160 cm (# 28276000)

Alternative sizes:

· **Croma Select E** Shower set Multi with shower bar 90 cm	White/Chrome	26590400	133.80

Water saving EcoSmart version:

· **Croma Select E** Shower set Multi EcoSmart 9 l/min with shower bar 65 cm	White/Chrome	26581400	127.50

Optional parts:

· Wall bar spacer	Chrome	97450000	8.70

Measurements within scale drawings are in mm.

Technical specifications and units of measure are subject to change.



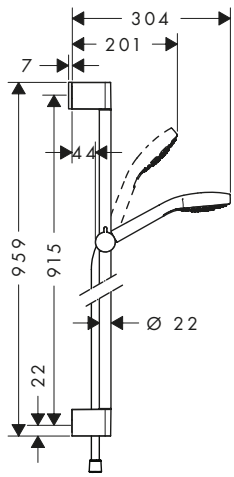

	finish	code no.	Euro
Croma Select E Shower set Vario with shower bar 90 cm · consists of: hand shower, shower bar, shower hose, slider · shower head size: 110 mm · spray type: TurboRain, IntenseRain, Rain · convenient diversion via Select button · hand shower holder inclination angle can be adjusted by 45° · maximum flow rate at 3 bar: 14,7 l/ min · minimum flow pressure: 1 bar · pivot connector prevent hose from tangling · wall mounting: screw fastening · wall supports of plastic · shower bar diameter: 22 mm · profile stand pipe: round	White/Chrome	26592400	118.20
Consisting of: · **Croma Select E** Hand shower Vario (# 26812400) · **Unica** Shower bar Croma 90 cm (# 26506000) · **Isiflex** Shower hose 160 cm (# 28276000)			
Alternative sizes: · **Croma Select E** Shower set Vario with shower bar 65 cm	White/Chrome	26582400	111.70
Water saving EcoSmart version: · **Croma Select E** Shower set Vario EcoSmart 9 l/ min with shower bar 90 cm	White/Chrome	26593400	118.20
Optional parts: · Wall bar spacer	Chrome	97450000	8.70

Measurements within scale drawings are in mm.

Technical specifications and units of measure are subject to change.



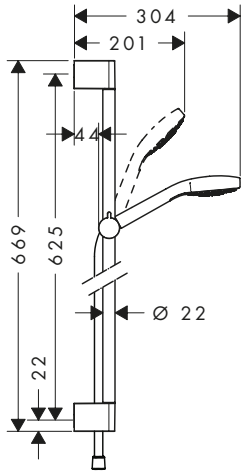

	finish	code no.	Euro
Croma Select E Shower set Vario with shower bar 65 cm · consists of: hand shower, shower bar, shower hose, slider · shower head size: 110 mm · spray type: TurboRain, IntenseRain, Rain · convenient diversion via Select button · hand shower holder inclination angle can be adjusted by 45° · maximum flow rate at 3 bar: 14,7 l/ min · minimum flow pressure: 1 bar · pivot connector prevent hose from tangling · wall mounting: screw fastening · wall supports of plastic · shower bar diameter: 22 mm · profile stand pipe: round	White/Chrome	26582400	111.70
Consisting of: · **Croma Select E** Hand shower Vario (# 26812400) · **Unica** Shower bar Croma 65 cm (# 26505000) · **Isiflex** Shower hose 160 cm (# 28276000)			
Alternative sizes: · **Croma Select E** Shower set Vario with shower bar 90 cm	White/Chrome	26592400	118.20
Water saving EcoSmart version: · **Croma Select E** Shower set Vario EcoSmart 9 l/ min with shower bar 65 cm	White/Chrome	26583400	111.70
Alternative products: · **Croma Select E** Shower set Vario with shower bar 65 cm and soap dish	White/Chrome	26586400	118.20
Optional parts: · Wall bar spacer	Chrome	97450000	8.70

Measurements within scale drawings are in mm.

Technical specifications and units of measure are subject to change.

	finish	code no.	Euro



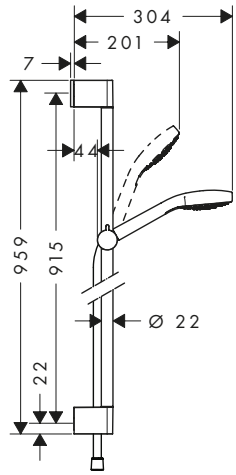

Croma Select E Shower set 1jet with shower bar 90 cm

White/Chrome — 26594400 — 105.60

Quick Clean — XXL Performance

- consists of: hand shower, shower bar, shower hose, slider
- shower head size: 110 mm
- spray type: Rain
- hand shower holder inclination angle can be adjusted by 45°
- maximum flow rate at 3 bar: 16 l/ min
- minimum flow pressure: 1 bar
- pivot connector prevent hose from tangling
- wall mounting: screw fastening
- wall supports of plastic
- shower bar diameter: 22 mm
- profile stand pipe: round

Consisting of:
- **Croma E** Hand shower 1jet (# 26814400)
- **Unica** Shower bar Croma 90 cm with Isiflex shower hose 160 cm (# 26504000)

Alternative sizes:

· **Croma Select E** Shower set 1jet with shower bar 65 cm	White/Chrome	26584400	99.30

Water saving EcoSmart version:

· **Croma Select E** Shower set 1jet EcoSmart 9 l/ min with shower bar 90 cm	White/Chrome	26595400	105.60

Optional parts:

· Wall bar spacer	Chrome	97450000	8.70



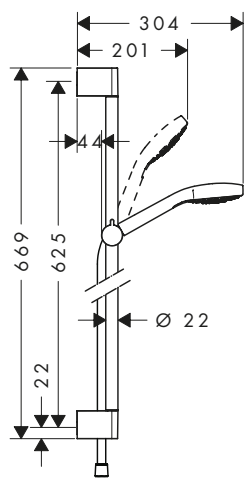

Croma Select E Shower set 1jet with shower bar 65 cm

White/Chrome — 26584400 — 99.30

Quick Clean — XXL Performance

- consists of: hand shower, shower bar, shower hose, slider
- shower head size: 110 mm
- spray type: Rain
- hand shower holder inclination angle can be adjusted by 45°
- maximum flow rate at 3 bar: 16 l/ min
- minimum flow pressure: 1 bar
- pivot connector prevent hose from tangling
- wall mounting: screw fastening
- wall supports of plastic
- shower bar diameter: 22 mm
- profile stand pipe: round

Consisting of:
- **Croma E** Hand shower 1jet (# 26814400)
- **Unica** Shower bar Croma 65 cm with Isiflex shower hose 160 cm (# 26503000)

Alternative sizes:

· **Croma Select E** Shower set 1jet with shower bar 90 cm	White/Chrome	26594400	105.60

Water saving EcoSmart version:

· **Croma Select E** Shower set 1jet EcoSmart 9 l/ min with shower bar 65 cm	White/Chrome	26585400	99.30

Optional parts:

· Wall bar spacer	Chrome	97450000	8.70

Measurements within scale drawings are in mm.

	finish	code no.	Euro



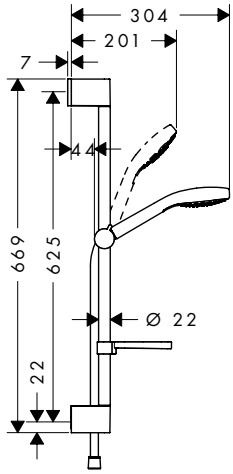

Croma Select E Shower set Vario with shower bar 65 cm and soap dish

White/Chrome — 26586400 — 118.20

Select · Quick Clean · XXL Performance

- consists of: hand shower, shower bar, shower hose, slider, soap dish
- shower head size: 110 mm
- spray type: TurboRain, IntenseRain, Rain
- convenient diversion via Select button
- hand shower holder inclination angle can be adjusted by 45°
- maximum flow rate at 3 bar: 14,7 l/min
- minimum flow pressure: 1 bar
- pivot connector prevent hose from tangling
- wall mounting: screw fastening
- wall supports of plastic
- shower bar diameter: 22 mm
- profile stand pipe: round

Consisting of:
- **Croma Select E** Hand shower Vario (# 26812400)
- **Unica** Shower bar Croma 65 cm with Isiflex shower hose 160 cm (# 26503000)
- **Casetta** Soap dish E (# 26519000)

Alternative products:

· **Croma Select E** Shower set Vario with shower bar 65 cm	White/Chrome	26582400	111.70

Optional parts:

· Wall bar spacer	Chrome	97450000	8.70

Croma Select S shower sets



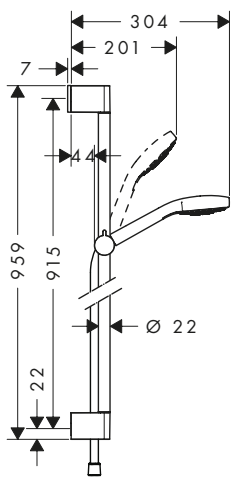

Croma Select S Shower set Multi with shower bar 90 cm

White/Chrome — 26570400 — 133.80

Select · Quick Clean · XXL Performance

- consists of: hand shower, shower bar, shower hose, slider
- shower head size: 110 mm
- spray type: SoftRain, IntenseRain, Massage spray
- convenient diversion via Select button
- hand shower holder inclination angle can be adjusted by 45°
- maximum flow rate at 3 bar: 16 l/min
- minimum flow pressure: 1 bar
- pivot connector prevent hose from tangling
- wall mounting: screw fastening
- wall supports of plastic
- shower bar diameter: 22 mm
- profile stand pipe: round

Consisting of:
- **Croma Select S** Hand shower Multi (# 26800400)
- **Unica** Shower bar Croma 90 cm with Isiflex shower hose 160 cm (# 26504000)

Alternative sizes:

· **Croma Select S** Shower set Multi with shower bar 65 cm	White/Chrome	26560400	127.50

Water saving EcoSmart version:

· **Croma Select S** Shower set Multi EcoSmart 9 l/min with shower bar 90 cm	White/Chrome	26571400	133.80

Optional parts:

· Wall bar spacer	Chrome	97450000	8.70

Measurements within scale drawings are in mm.

Technical specifications and units of measure are subject to change.

	finish	code no.	Euro



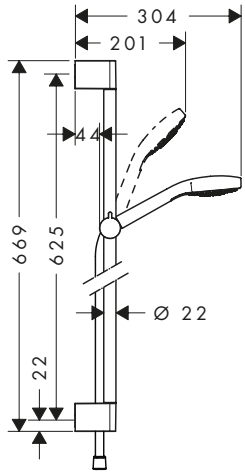

Croma Select S Shower set Multi with shower bar 65 cm

	finish	code no.	Euro
	White/Chrome	26560400	127.50

- consists of: hand shower, shower bar, shower hose, slider
- shower head size: 110 mm
- spray type: SoftRain, IntenseRain, Massage spray
- convenient diversion via Select button
- hand shower holder inclination angle can be adjusted by 45°
- maximum flow rate at 3 bar: 16 l/ min
- minimum flow pressure: 1 bar
- pivot connector prevent hose from tangling
- wall mounting: screw fastening
- wall supports of plastic
- shower bar diameter: 22 mm
- profile stand pipe: round

Consisting of:
- **Croma Select S** Hand shower Multi (# 26800400)
- **Unica** Shower bar Croma 65 cm with Isiflex shower hose 160 cm (# 26503000)

Alternative sizes:

· **Croma Select S** Shower set Multi with shower bar 90 cm	White/Chrome	26570400	133.80

Water saving EcoSmart version:

· **Croma Select S** Shower set Multi EcoSmart 9 l/ min with shower bar 65 cm	White/Chrome	26561400	127.50

Optional parts:

· Wall bar spacer	Chrome	97450000	8.70



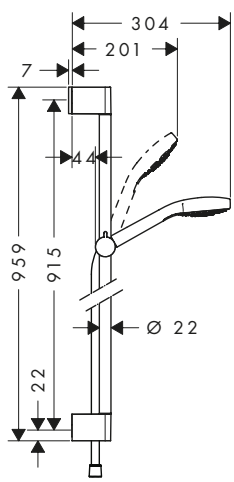

Croma Select S Shower set Vario with shower bar 90 cm

	finish	code no.	Euro
	White/Chrome	26572400	118.20

- consists of: hand shower, shower bar, shower hose, slider
- shower head size: 110 mm
- spray type: Rain, TurboRain, IntenseRain
- convenient diversion via Select button
- hand shower holder inclination angle can be adjusted by 45°
- maximum flow rate at 3 bar: 14,7 l/ min
- minimum flow pressure: 1 bar
- pivot connector prevent hose from tangling
- wall mounting: screw fastening
- wall supports of plastic
- shower bar diameter: 22 mm
- profile stand pipe: round

Consisting of:
- **Croma Select S** Hand shower Vario (# 26802400)
- **Unica** Shower bar Croma 90 cm with Isiflex shower hose 160 cm (# 26504000)

Alternative sizes:

· **Croma Select S** Shower set Vario with shower bar 65 cm	White/Chrome	26562400	111.70

Water saving EcoSmart version:

· **Croma Select S** Shower set Vario EcoSmart 9 l/ min with shower bar 90 cm	White/Chrome	26573400	118.20

Optional parts:

· Wall bar spacer	Chrome	97450000	8.70

Measurements within scale drawings are in mm.

Technical specifications and units of measure are subject to change.

	finish	code no.	Euro



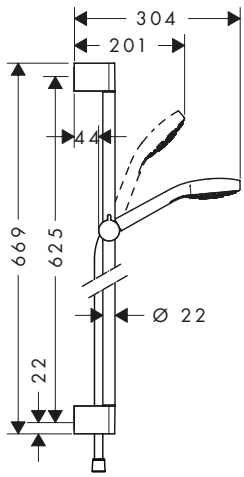

Croma Select S Shower set Vario with shower bar 65 cm

	finish	code no.	Euro
	White/Chrome	26562400	111.70

Select · Quick Clean · XXL Performance

- consists of: hand shower, shower bar, shower hose, slider
- shower head size: 110 mm
- spray type: Rain, IntenseRain, TurboRain
- convenient diversion via Select button
- hand shower holder inclination angle can be adjusted by 45°
- maximum flow rate at 3 bar: 15 l/min
- minimum flow pressure: 1 bar
- pivot connector prevent hose from tangling
- wall mounting: screw fastening
- wall supports of plastic
- shower bar diameter: 22 mm
- profile stand pipe: round

Consisting of:
- **Croma Select S** Hand shower Vario (# 26802400)
- **Unica** Shower bar Croma 65 cm with Isiflex shower hose 160 cm (# 26503000)

Alternative sizes:

· **Croma Select S** Shower set Vario with shower bar 90 cm	White/Chrome	26572400	118.20

Water saving EcoSmart version:

· **Croma Select S** Shower set Vario EcoSmart 9 l/min with shower bar 65 cm	White/Chrome	26563400	111.70

Alternative products:

· **Croma Select S** Shower set Vario with shower bar 65 cm and soap dish	White/Chrome	26566400	118.20

Optional parts:

· Wall bar spacer	Chrome	97450000	8.70



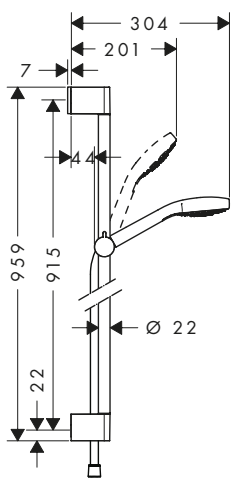

Croma Select S Shower set 1jet with shower bar 90 cm

	finish	code no.	Euro
	White/Chrome	26574400	105.60

Quick Clean · XXL Performance

- consists of: hand shower, shower bar, shower hose, slider
- shower head size: 110 mm
- spray type: Rain
- hand shower holder inclination angle can be adjusted by 45°
- maximum flow rate at 3 bar: 16 l/min
- minimum flow pressure: 1 bar
- pivot connector prevent hose from tangling
- wall mounting: screw fastening
- wall supports of plastic
- shower bar diameter: 22 mm
- profile stand pipe: round

Consisting of:
- **Croma S** Hand shower 1jet (# 26804400)
- **Unica** Shower bar Croma 90 cm with Isiflex shower hose 160 cm (# 26504000)

Alternative sizes:

· **Croma Select S** Shower set 1jet with shower bar 65 cm	White/Chrome	26564400	99.30

Water saving EcoSmart version:

· **Croma Select S** Shower set 1jet EcoSmart 9 l/min with shower bar 90 cm	White/Chrome	26575400	105.60

Optional parts:

· Wall bar spacer	Chrome	97450000	8.70

Measurements within scale drawings are in mm.

Technical specifications and units of measure are subject to change.

	finish	code no.	Euro



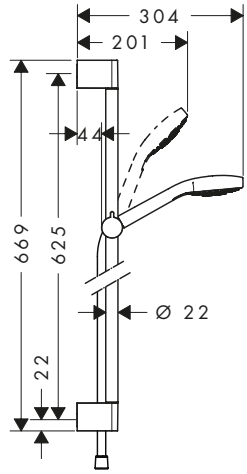

Croma Select S Shower set 1jet with shower bar 65 cm

	finish	code no.	Euro
	White/Chrome	26564400	99.30

- consists of: hand shower, shower bar, shower hose, slider
- shower head size: 110 mm
- spray type: Rain
- hand shower holder inclination angle can be adjusted by 45°
- maximum flow rate at 3 bar: 16 l/ min
- minimum flow pressure: 1 bar
- pivot connector prevent hose from tangling
- wall mounting: screw fastening
- wall supports of plastic
- shower bar diameter: 22 mm
- profile stand pipe: round

Consisting of:
- **Croma S** Hand shower 1jet (# 26804400)
- **Unica** Shower bar Croma 65 cm with Isiflex shower hose 160 cm (# 26503000)

Alternative sizes:

· **Croma Select S** Shower set 1jet with shower bar 90 cm	White/Chrome	26574400	105.60

Water saving EcoSmart version:

· **Croma Select S** Shower set 1jet EcoSmart 9 l/ min with shower bar 65 cm	White/Chrome	26565400	99.30

Optional parts:

· Wall bar spacer	Chrome	97450000	8.70



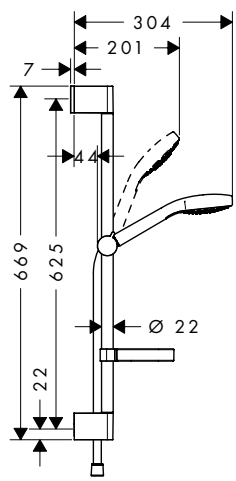

Croma Select S Shower set Vario with shower bar 65 cm and soap dish

	finish	code no.	Euro
	White/Chrome	26566400	118.20

- consists of: hand shower, shower bar, shower hose, slider, soap dish
- shower head size: 110 mm
- spray type: Rain, TurboRain, IntenseRain
- convenient diversion via Select button
- hand shower holder inclination angle can be adjusted by 45°
- maximum flow rate at 3 bar: 14,7 l/ min
- minimum flow pressure: 1 bar
- pivot connector prevent hose from tangling
- wall mounting: screw fastening
- wall supports of plastic
- shower bar diameter: 22 mm
- profile stand pipe: round

Consisting of:
- **Croma Select S** Hand shower Vario (# 26802400)
- **Unica** Shower bar Croma 65 cm with Isiflex shower hose 160 cm (# 26503000)
- **Casetta** Soap dish C (# 28678000)

Alternative products:

· **Croma Select S** Shower set Vario with shower bar 65 cm	White/Chrome	26562400	111.70

Optional parts:

· Wall bar spacer	Chrome	97450000	8.70

Measurements within scale drawings are in mm.

Croma 100 shower sets

	finish	code no.	Euro



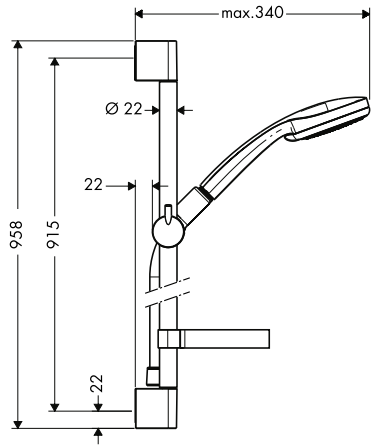

Croma 100 Shower set Multi with shower bar 90 cm and soap dish

Chrome 27774000 144.00

Quick Clean · XXL Performance

- consists of: hand shower, shower bar, shower hose, slider, soap dish
- shower head size: 100 mm
- spray type: Rain, MonoRain, Massage spray
- spray type adjustment by turning spray disc
- 90° position adjustable hand shower holder, pivots left and right, up and down
- maximum flow rate at 3 bar: 19 l/min
- minimum flow pressure: 1 bar
- pivot connector prevent hose from tangling
- wall mounting: screw fastening
- wall supports of plastic
- shower bar diameter: 22 mm
- profile stand pipe: round

Consisting of:
- **Croma 100** Hand shower Multi (# 28536000)
- **Unica** Shower bar C 90 cm with Isiflex shower hose 160 cm (# 27610000)
- **Casetta** Soap dish C (# 28678000)

Optional parts:

· Wall bar spacer	Chrome	97450000	8.70



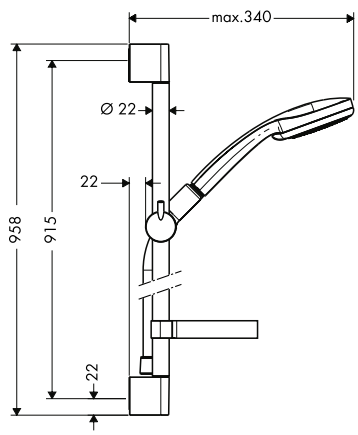

Croma 100 Shower set Vario with shower bar 90 cm and soap dish

Chrome 27771000 115.40

Quick Clean · XXL Performance

- consists of: hand shower, shower bar, shower hose, slider, soap dish
- shower head size: 100 mm
- spray type: Rain, Shampoo spray, normal spray, Massage spray
- spray type adjustment by turning spray disc
- 90° position adjustable hand shower holder, pivots left and right, up and down
- maximum flow rate at 3 bar: 18 l/min
- minimum flow pressure: 1 bar
- pivot connector prevent hose from tangling
- wall mounting: screw fastening
- wall supports of plastic
- shower bar diameter: 22 mm
- profile stand pipe: round

Consisting of:
- **Croma 100** Hand shower Vario (# 28535000)
- **Unica** Shower bar C 90 cm with Isiflex shower hose 160 cm (# 27610000)
- **Casetta** Soap dish C (# 28678000)

Alternative sizes:

· **Croma 100** Shower set Vario with shower bar 65 cm and soap dish	Chrome	27772000	106.40

Water saving EcoSmart version:

· **Croma 100** Shower set Vario EcoSmart 9 l/min with shower bar 90 cm and soap dish	Chrome	27653000	120.00

Optional parts:

· Wall bar spacer	Chrome	97450000	8.70

Measurements within scale drawings are in mm.

Technical specifications and units of measure are subject to change.

	finish	code no.	Euro



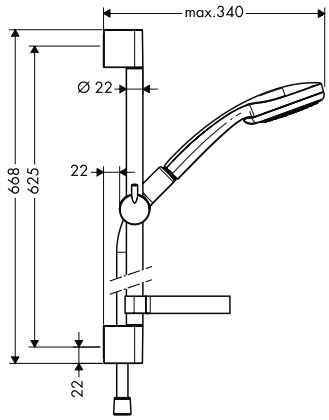

Croma 100 Shower set Vario with shower bar 65 cm and soap dish

	finish	code no.	Euro
	Chrome	27772000	106.40

- consists of: hand shower, shower bar, shower hose, slider, soap dish
- shower head size: 100 mm
- spray type: Rain, Shampoo spray, normal spray, Massage spray
- spray type adjustment by turning spray disc
- 90° position adjustable hand shower holder, pivots left and right, up and down
- maximum flow rate at 3 bar: 18 l/min
- minimum flow pressure: 1 bar
- pivot connector prevent hose from tangling
- wall mounting: screw fastening
- wall supports of plastic
- shower bar diameter: 22 mm
- profile stand pipe: round

Consisting of:
- **Croma 100** Hand shower Vario (# 28535000)
- **Unica** Shower bar C 65 cm with Isiflex shower hose 160 cm (# 27611000)
- **Casetta** Soap dish C (# 28678000)

Alternative sizes:

· **Croma 100** Shower set Vario with shower bar 90 cm and soap dish	Chrome	27771000	115.40

Water saving EcoSmart version:

· **Croma 100** Shower set Vario EcoSmart 9 l/min with shower bar 65 cm and soap dish	Chrome	27776000	116.30

Optional parts:

· Wall bar spacer	Chrome	97450000	8.70



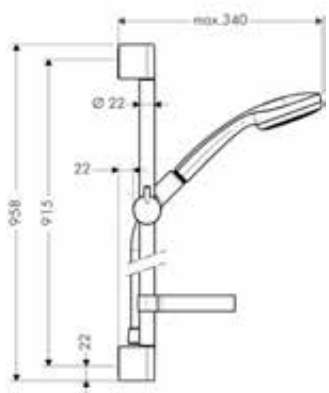

Croma 100 Shower set Mono with shower bar 90 cm and soap dish

	finish	code no.	Euro
	Chrome	27724000	100.20

- consists of: hand shower, shower bar, shower hose, slider, soap dish
- shower head size: 100 mm
- spray type: Rain
- 90° position adjustable hand shower holder, pivots left and right, up and down
- maximum flow rate at 3 bar: 16 l/min
- minimum flow pressure: 1 bar
- pivot connector prevent hose from tangling
- wall mounting: screw fastening
- wall supports of plastic
- shower bar diameter: 22 mm
- profile stand pipe: round

Consisting of:
- **Croma 100** Hand shower 1jet (# 28580000)
- **Unica** Shower bar C 90 cm with Isiflex shower hose 160 cm (# 27610000)
- **Casetta** Soap dish C (# 28678000)

Alternative sizes:

· **Croma 100** Shower set Mono with shower bar 65 cm and soap dish	Chrome	27717000	92.20

Optional parts:

· Wall bar spacer	Chrome	97450000	8.70

Measurements within scale drawings are in mm.

Technical specifications and units of measure are subject to change.

	finish	code no.	Euro



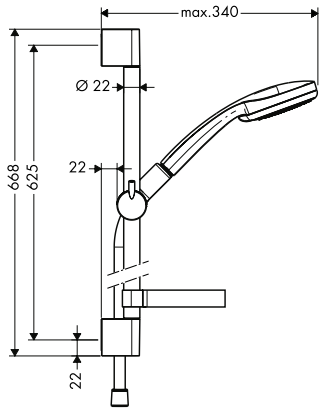

Croma 100 Shower set Mono with shower bar 65 cm and soap dish

	Chrome	27717000	92.20

· consists of: hand shower, shower bar, shower hose, slider, soap dish
· shower head size: 100 mm
· spray type: Rain
· 90° position adjustable hand shower holder, pivots left and right, up and down
· maximum flow rate at 3 bar: 16 l/min
· minimum flow pressure: 1 bar
· pivot connector prevent hose from tangling
· wall mounting: screw fastening
· wall supports of plastic
· shower bar diameter: 22 mm
· profile stand pipe: round

Consisting of:
· **Croma 100** Hand shower 1jet (# 28580000)
· **Unica** Shower bar C 65 cm with Isiflex shower hose 160 cm (# 27611000)
· **Casetta** Soap dish C (# 28678000)

Alternative sizes:

· **Croma 100** Shower set Mono with shower bar 90 cm and soap dish	Chrome	27724000	100.20

Optional parts:

· Wall bar spacer	Chrome	97450000	8.70

Crometta shower sets



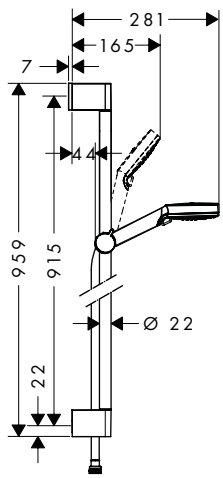

Crometta Shower set Vario with shower bar 90 cm

	White/Chrome	26536400	57.70

· consists of: hand shower, shower bar, shower hose, slider
· shower head size: 100 mm
· spray type: Rain, IntenseRain
· spray type adjustment by turning spray disc
· hand shower holder inclination angle can be adjusted by 45°
· maximum flow rate at 3 bar: 13,8 l/min
· minimum flow pressure: 1 bar
· pivot connector prevent hose from tangling
· wall mounting: screw fastening
· wall supports of plastic
· shower bar diameter: 22 mm
· profile stand pipe: round
· drilling distance 915 mm

Consisting of:
· **Crometta** Hand shower Vario (# 26330400)
· **Unica** Shower bar Croma 90 cm (# 26506000)
· **Isiflex** Shower hose 160 cm (# 28276000)

Alternative sizes:

· **Crometta** Shower set Vario with shower bar 65 cm	White/Chrome	26532400	51.60

Water saving EcoSmart version:

· **Crometta** Shower set Vario EcoSmart 9 l/min with shower bar 90 cm	White/Chrome	26538400	59.80

Optional parts:

· Wall bar spacer	Chrome	97450000	8.70

Measurements within scale drawings are in mm.

Technical specifications and units of measure are subject to change.



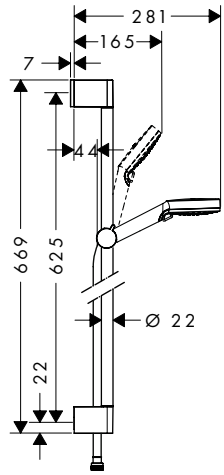

		finish	code no.	Euro
	Crometta Shower set Vario with shower bar 65 cm · consists of: hand shower, shower bar, shower hose, slider · shower head size: 100 mm · spray type: Rain, IntenseRain · spray type adjustment by turning spray disc · hand shower holder inclination angle can be adjusted by 45° · maximum flow rate at 3 bar: 13,8 l/min · minimum flow pressure: 1 bar · pivot connector prevent hose from tangling · wall mounting: screw fastening · wall supports of plastic · shower bar diameter: 22 mm · profile stand pipe: round · drilling distance 625 mm	White/Chrome	26532400	51.60
	Consisting of: · **Crometta** Hand shower Vario (# 26330400) · **Unica** Shower bar Croma 65 cm (# 26505000) · **Isiflex** Shower hose 160 cm (# 28276000)			
	Alternative sizes:			
	· **Crometta** Shower set Vario with shower bar 90 cm	White/Chrome	26536400	57.70
	Water saving EcoSmart version:			
	· **Crometta** Shower set Vario EcoSmart 9 l/min with shower bar 65 cm	White/Chrome	26534400	54.10
	· **Crometta** Shower set Vario Green 6 l/min with shower bar 65 cm	White/Chrome	26555400	54.10
	Alternative products:			
	· **Crometta** Shower set Vario with shower bar 65 cm and soap dish	White/Chrome	26553400	57.70
	Optional parts:			
	· Wall bar spacer	Chrome	97450000	8.70

Measurements within scale drawings are in mm.

	finish	code no.	Euro



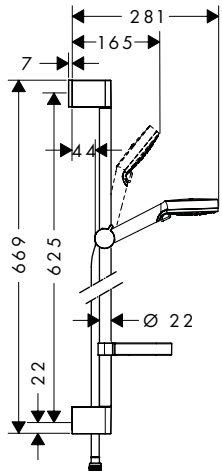

Crometta Shower set Vario with shower bar 65 cm and soap dish

White/Chrome — 26553400 — 57.70

Quick Clean · XXL Performance

- consists of: hand shower, shower bar, shower hose, slider, soap dish
- shower head size: 100 mm
- spray type: Rain, IntenseRain
- spray type adjustment by turning spray disc
- hand shower holder inclination angle can be adjusted by 45°
- maximum flow rate at 3 bar: 13,8 l/min
- minimum flow pressure: 1 bar
- pivot connector prevent hose from tangling
- wall mounting: screw fastening
- wall supports of plastic
- shower bar diameter: 22 mm
- profile stand pipe: round

Consisting of:
- **Crometta** Hand shower Vario (# 26330400)
- **Unica** Shower bar Croma 65 cm (# 26505000)
- **Isiflex** Shower hose 160 cm (# 28276000)
- **Casetta** Soap dish C (# 28678000)

Alternative products:

· **Crometta** Shower set Vario with shower bar 65 cm	White/Chrome	26532400	51.60

Optional parts:

· Wall bar spacer	Chrome	97450000	8.70



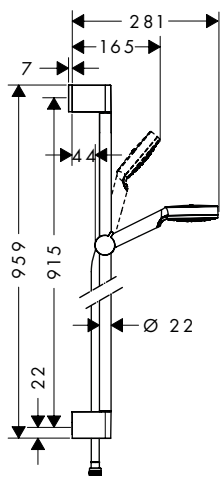

Crometta Shower set 1jet with shower bar 90 cm

White/Chrome — 26537400 — 55.20

Quick Clean · XXL Performance

- consists of: hand shower, shower bar, shower hose, slider
- shower head size: 100 mm
- spray type: Rain
- hand shower holder inclination angle can be adjusted by 45°
- maximum flow rate at 3 bar: 14 l/min
- minimum flow pressure: 1 bar
- pivot connector prevent hose from tangling
- wall mounting: screw fastening
- wall supports of plastic
- shower bar diameter: 22 mm
- profile stand pipe: round

Consisting of:
- **Crometta** Hand shower 1jet (# 26331400)
- **Unica** Shower bar Croma 90 cm (# 26506000)
- **Isiflex** Shower hose 160 cm (# 28276000)

Alternative sizes:

· **Crometta** Shower set 1jet with shower bar 65 cm	White/Chrome	26533400	49.30

Water saving EcoSmart version:

· **Crometta** Shower set 1jet EcoSmart 9 l/min with shower bar 90 cm	White/Chrome	26539400	57.70

Optional parts:

· Wall bar spacer	Chrome	97450000	8.70

Measurements within scale drawings are in mm.

Technical specifications and units of measure are subject to change.

	finish	code no.	Euro



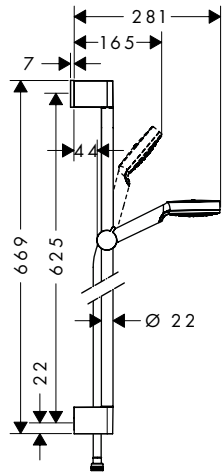

Crometta Shower set 1jet with shower bar 65 cm

White/Chrome — 26533400 — 49.30

- consists of: hand shower, shower bar, shower hose, slider
- shower head size: 100 mm
- spray type: Rain
- hand shower holder inclination angle can be adjusted by 45°
- maximum flow rate at 3 bar: 14 l/ min
- minimum flow pressure: 1 bar
- pivot connector prevent hose from tangling
- wall mounting: screw fastening
- wall supports of plastic
- shower bar diameter: 22 mm
- profile stand pipe: round

Consisting of:
- **Crometta** Hand shower 1jet (# 26331400)
- **Unica** Shower bar Croma 65 cm (# 26505000)
- **Isiflex** Shower hose 160 cm (# 28276000)

Alternative sizes:

· **Crometta** Shower set 1jet with shower bar 90 cm	White/Chrome	26537400	55.20

Water saving EcoSmart version:

· **Crometta** Shower set 1jet EcoSmart 9 l/ min with shower bar 65 cm	White/Chrome	26535400	51.60
· **Crometta** Shower set 1jet Green 6 l/ min with shower bar 65 cm	White/Chrome	26554400	51.60

Optional parts:

· Wall bar spacer	Chrome	97450000	8.70

Crometta 85 shower sets



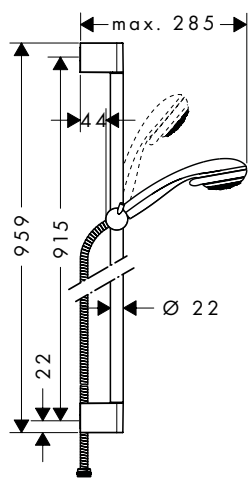

Crometta 85 Shower set Multi with shower bar 90 cm

Chrome — 27766000 — 80.50

- consists of: hand shower, shower bar, shower hose, slider
- shower head size: 85 mm
- spray type: Massage spray, MonoRain, normal spray
- spray type adjustment by turning spray disc
- 90° position adjustable hand shower holder, pivots left and right, up and down
- maximum flow rate at 3 bar: 16 l/ min
- minimum flow pressure: 1 bar
- wall mounting: screw fastening
- wall supports of plastic
- shower bar diameter: 22 mm
- profile stand pipe: round

Consisting of:
- **Crometta 85** Hand shower Multi (# 28563000)
- **Unica** Shower bar Crometta 90 cm with Metaflex shower hose 160 cm (# 27614000)

Alternative sizes:

· **Crometta 85** Shower set Multi with shower bar 65 cm	Chrome	27767000	76.80

Optional parts:

· **Casetta** Soap dish C	Chrome	28678000	15.70
· Wall bar spacer	Chrome	97450000	8.70

Measurements within scale drawings are in mm.

Technical specifications and units of measure are subject to change.

	finish	code no.	Euro



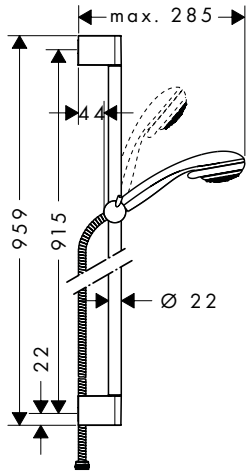

Crometta 85 Shower set Vario with shower bar 90 cm

Chrome 27762000 65.00

Quick Clean

- consists of: hand shower, shower bar, shower hose, slider
- shower head size: 85 mm
- spray type: normal spray, Vario spray
- spray type adjustment by turning spray disc
- 90° position adjustable hand shower holder, pivots left and right, up and down
- maximum flow rate at 3 bar: 17 l/min
- minimum flow pressure: 1 bar
- wall mounting: screw fastening
- wall supports of plastic
- shower bar diameter: 22 mm
- profile stand pipe: round

Consisting of:
- **Crometta 85** Hand shower Vario (# 28562000)
- **Unica** Shower bar Crometta 90 cm with Metaflex shower hose 160 cm (# 27614000)

Alternative sizes:

· **Crometta 85** Shower set Vario with shower bar 65 cm	Chrome	27763000	61.20

Optional parts:

· **Casetta** Soap dish C	Chrome	28678000	15.70
· Wall bar spacer	Chrome	97450000	8.70



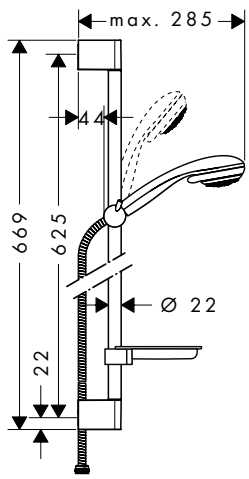

Crometta 85 Shower set Vario with shower bar 65 cm and soap dish

Chrome 27764000 67.80

Quick Clean

- consists of: hand shower, shower bar, shower hose, slider, soap dish
- shower head size: 85 mm
- spray type: normal spray, Vario spray
- spray type adjustment by turning spray disc
- 90° position adjustable hand shower holder, pivots left and right, up and down
- maximum flow rate at 3 bar: 17 l/min
- minimum flow pressure: 1 bar
- wall mounting: screw fastening
- wall supports of plastic
- shower bar diameter: 22 mm
- profile stand pipe: round

Consisting of:
- **Crometta 85** Hand shower Vario (# 28562000)
- **Unica** Shower bar Crometta 65 cm with Metaflex shower hose 160 cm (# 27615000)
- **Casetta** Soap dish S (# 28684000)

Optional parts:

· Wall bar spacer	Chrome	97450000	8.70

Measurements within scale drawings are in mm.

Technical specifications and units of measure are subject to change.

	finish	code no.	Euro



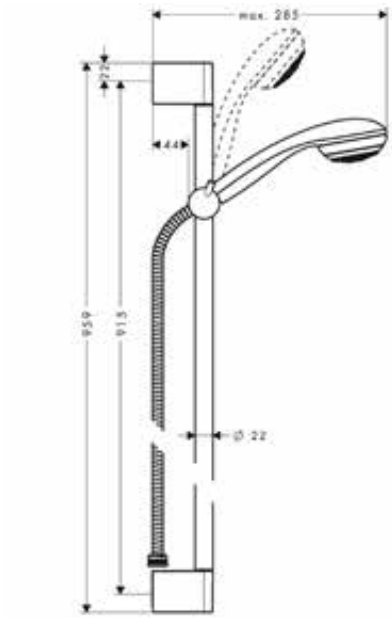

Crometta 85 Shower set Mono with shower bar 90 cm — Chrome — 27729000 — 63.80

Quick Clean

- consists of: hand shower, shower bar, shower hose, slider
- shower head size: 85 mm
- spray type: normal spray
- 90° position adjustable hand shower holder, pivots left and right, up and down
- maximum flow rate at 3 bar: 16 l/ min
- minimum flow pressure: 1 bar
- wall mounting: screw fastening
- wall supports of plastic
- shower bar diameter: 22 mm
- profile stand pipe: round

Consisting of:
- **Crometta 85** Hand shower Mono (# 28585000)
- **Unica** Shower bar Crometta 90 cm with Metaflex shower hose 160 cm (# 27614000)

Alternative sizes:

· **Crometta 85** Shower set Mono with shower bar 65 cm	Chrome	27728000	60.40

Optional parts:

· Wall bar spacer	Chrome	97450000	8.70
· **Casetta** Soap dish C	Chrome	28678000	15.70



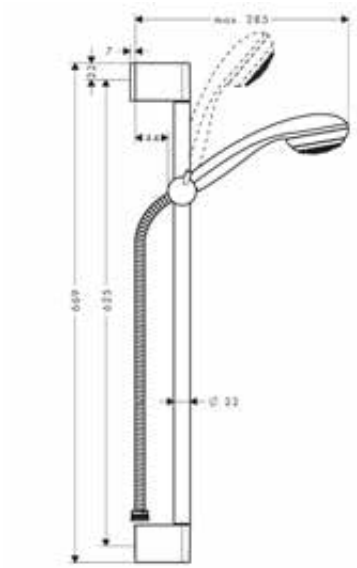

Crometta 85 Shower set Mono Green 6 l/ min with shower bar 65 cm — Chrome — 27652000 — 69.70

AirPower EcoSmart Quick Clean

- consists of: hand shower, shower bar, shower hose, slider
- shower head size: 85 mm
- spray type: normal spray
- 90° position adjustable hand shower holder, pivots left and right, up and down
- maximum flow rate at 3 bar: 6 l/ min
- minimum flow pressure: 1 bar
- wall mounting: screw fastening
- wall supports of plastic
- shower bar diameter: 22 mm
- profile stand pipe: round

Consisting of:
- **Crometta 85** Hand shower Mono Green 6 l/ min (# 28561000)
- **Unica** Shower bar Crometta 65 cm with Metaflex shower hose 160 cm (# 27615000)

Optional parts:

· **Casetta** Soap dish C	Chrome	28678000	15.70
· Wall bar spacer	Chrome	97450000	8.70

Measurements within scale drawings are in mm.

Vernis Blend shower sets

	finish	code no.	Euro
NEW			



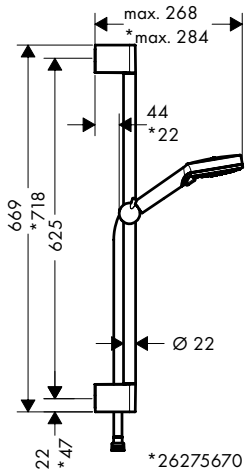

Vernis Blend Shower set Vario with shower bar Crometta 65 cm — Chrome — 26275000 — 47.90

Quick Clean · XXL Performance

- consists of: hand shower, shower bar, shower hose, slider
- shower head size: 100 mm
- spray type: Rain, IntenseRain
- spray type adjustment by turning spray disc
- hand shower holder inclination angle can be adjusted by 45°
- maximum flow rate at 3 bar: 15,2 l/min
- minimum flow pressure: 1 bar
- wall supports of plastic
- stand pipe length: 669 mm
- shower bar diameter: 22 mm
- profile stand pipe: round
- drilling distance 625 mm

Consisting of:
- **Unica** Shower bar Crometta 65 cm with Metaflex shower hose 160 cm (# 27615000)
- **Vernis Blend** Hand shower Vario (# 26270000)

NEW

Water saving EcoSmart version:

NEW — **Vernis Blend** Shower set Vario EcoSmart with shower bar Crometta 65 cm — Chrome — 26279000 — 47.90

Alternative products:

NEW — **Vernis Blend** Shower set Vario with shower bar 65 cm — Matt Black — 26422670 — 67.10

NEW



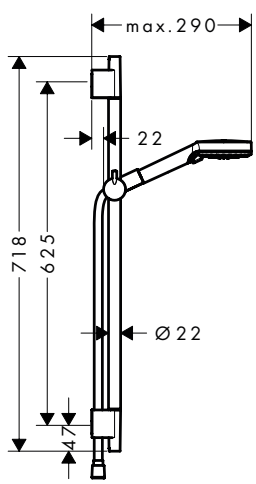

Vernis Blend Shower set Vario with shower bar 65 cm — Matt Black — 26422670 — 67.10

Quick Clean · XXL Performance

- consists of: hand shower, shower bar, shower hose, slider
- shower head size: 100 mm
- spray type: Rain, IntenseRain
- spray type adjustment by turning spray disc
- hand shower holder inclination angle can be adjusted by 45°
- maximum flow rate at 3 bar: 15,2 l/min
- minimum flow pressure: 1 bar
- wall supports of plastic
- stand pipe length: 718 mm
- shower bar diameter: 22 mm
- profile stand pipe: round
- drilling distance 625 mm

Consisting of:
- **Unica** Shower bar S Puro 65 cm with Isiflex shower hose 160 cm (# 28632670)
- **Vernis Blend** Hand shower Vario (# 26270670)

NEW

Water saving EcoSmart version:

NEW — **Vernis Blend** Shower set Vario EcoSmart with shower bar S Puro 65 cm — Matt Black — 26423670 — 66.70

Alternative products:

NEW — **Vernis Blend** Shower set Vario with shower bar Crometta 65 cm — Chrome — 26275000 — 47.90

Measurements within scale drawings are in mm.

Technical specifications and units of measure are subject to change.

	finish	code no.	Euro
Vernis Blend Shower set Vario with shower bar 65 cm project pack (6 pieces)	Chrome	26371000	282.00

NEW

6x



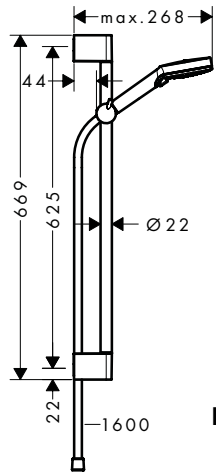

NEW

- consists of: hand shower, shower bar, shower hose, slider
- shower head size: 100 mm
- spray type: Rain, IntenseRain
- spray type adjustment by turning spray disc
- hand shower holder inclination angle can be adjusted by 45°
- maximum flow rate at 3 bar: 15,2 l/min
- minimum flow pressure: 1 bar
- wall supports of plastic
- stand pipe length: 669 mm
- shower bar diameter: 22 mm
- profile stand pipe: round
- drilling distance 625 mm
- packaging unit: 6 pieces

Consisting of:

- **Vernis Blend** Shower set Vario with shower bar Crometta 65 cm (# 26275000)

Raindance Select E shower sets with thermostatic mixer for exposed installation



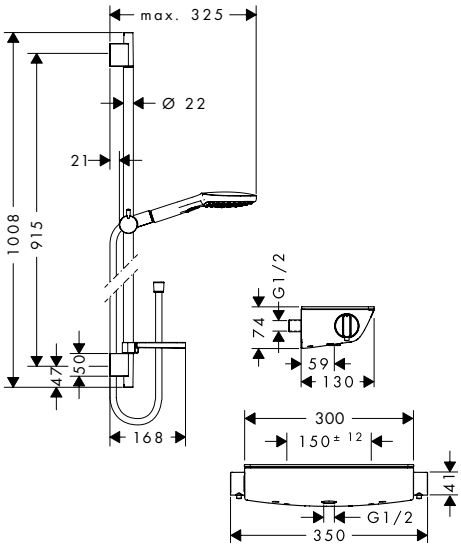

	finish	code no.	Euro
Raindance Select E Shower system for exposed installation 120 with Ecostat Select thermostat and shower bar 90 cm	Chrome	27039000	509.00
	White/Chrome	27039400	509.00

Cool Contact · Select · AirPower · XXL Performance

- consists of: hand shower, shower thermostat, shower bar, slider, soap dish, shower hose
- shower head size: 120 mm
- convenient diversion via Select button
- spray type hand shower: Rain, RainAir, Whirl
- maximum flow rate at 3 bar: 13,8 l/min
- minimum flow pressure: 1 bar
- profile stand pipe: round
- shower bar diameter: 22 mm
- pivot connector prevent hose from tangling
- 90° position adjustable hand shower holder, pivots left and right, up and down
- in case of installation on existing G ¾ connections, adaptor # 02026000 must be used
- CoolContact thermostat: Prevents the housing from heating up, making showering even safer

Consisting of:

- **Ecostat Select** Shower thermostat for exposed installation (# 13161XXX)
- **Raindance Select E** Hand shower 120 3jet (# 26520XXX)
- **Unica** Shower bar S Puro 90 cm with Isiflex shower hose 160 cm (# 28631000)
- **Casetta** Soap dish E (# 26519000)

Alternative sizes:

· **Raindance Select E** Shower system for exposed installation 120 with Ecostat Select thermostat and shower bar 65 cm	Chrome	27038000	501.10
	White/Chrome	27038400	501.10

Optional parts:

· S-connections adapter G ¾ for renovation	Chrome	02026000	32.20

Measurements within scale drawings are in mm.

Technical specifications and units of measure are subject to change.

Raindance Select S shower sets with thermostatic mixer for exposed installation



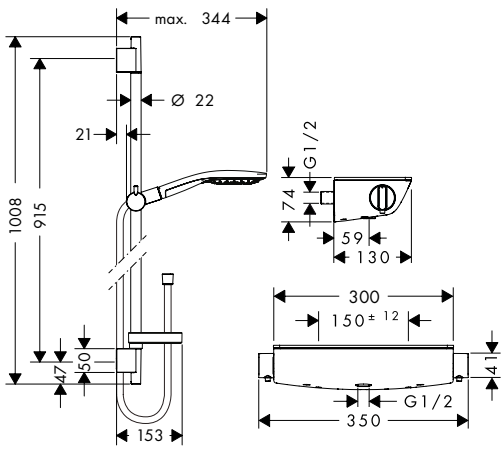

	finish	code no.	Euro
Raindance Select S Shower system for exposed installation 150 with Ecostat Select thermostat and shower bar 90 cm	Chrome	27037000	559.00
	White/Chrome	27037400	559.00

Cool Contact · Select · AirPower · XXL Performance

- consists of: hand shower, shower thermostat, shower bar, slider, soap dish, shower hose
- shower head size: 150 mm
- convenient diversion via Select button
- spray type hand shower: RainAir, CaresseAir, Mix
- maximum flow rate at 3 bar: 16 l/min
- minimum flow pressure: 1 bar
- profile stand pipe: round
- shower bar diameter: 22 mm
- pivot connector prevent hose from tangling
- 90° position adjustable hand shower holder, pivots left and right, up and down
- in case of installation on existing G ¾ connections, adaptor # 02026000 must be used
- CoolContact thermostat: Prevents the housing from heating up, making showering even safer

Consisting of:

- **Ecostat Select** Shower thermostat for exposed installation (# 13161XXX)
- **Raindance Select S** Hand shower 150 3jet (# 28587XXX)
- **Unica** Shower bar S Puro 90 cm with Isiflex shower hose 160 cm (# 28631000)
- **Casetta** Soap dish S Puro (# 28679000)

Alternative sizes:

· **Raindance Select S** Shower system for exposed installation 150 with Ecostat Select thermostat and shower bar 65 cm	Chrome	27036000	551.20
	White/Chrome	27036400	551.20

Optional parts:

· S-connections adapter G ¾ for renovation	Chrome	02026000	32.20

Measurements within scale drawings are in mm.

Technical specifications and units of measure are subject to change.

Pulsify Select S shower sets with thermostatic mixer for exposed installation

	finish	code no.	Euro

NEW







Pulsify Select S Shower system 105 3jet Relaxation with hand shower, thermostat, shower bar 65 cm, slider and shower hose

Chrome | 24260000 | 430.00

Push slider | Cool Contact | Select | XXL Performance

available from April 2022

- consists of: hand shower, shower thermostat, shower bar, slider, shower hose
- shower head size: 105 mm
- convenient diversion via Select button
- spray type hand shower: PowderRain, IntenseRain, Massage spray
- maximum flow rate at 3 bar: 11,4 l/min
- profile stand pipe: round
- shower bar diameter: 22 mm
- pivot connector prevent hose from tangling
- CoolContact thermostat: Prevents the housing from heating up, making showering even safer

Consisting of:

NEW
- **Pulsify Select S** Hand shower 105 3jet Relaxation (# 24110000)

NEW
- **ShowerTablet Select** Shower thermostat 400 for exposed installation (# 24360000)

NEW
- **Unica** Shower bar Pulsify S 65 cm with push slider and Isiflex shower hose 160 cm (# 24400000)

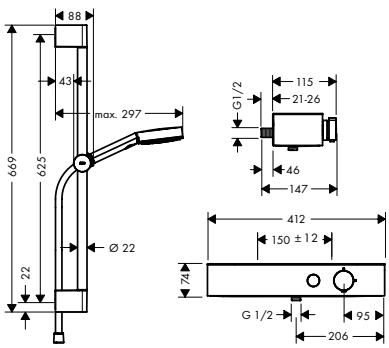

Alternative sizes:

NEW
- **Pulsify Select S** Shower system 105 3jet Relaxation with hand shower, thermostat, shower bar 90 cm, slider and shower hose

Chrome | 24270000 | 445.00

Croma Select E shower sets with thermostatic mixer for exposed installation



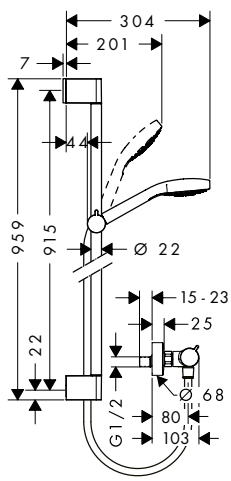

Croma Select E Shower system for exposed installation Vario with Ecostat Comfort thermostat and shower bar 90 cm

White/Chrome | 27082400 | 295.20

Select | XXL Performance

- consists of: hand shower, shower thermostat, shower bar, slider, shower hose
- shower head size: 110 mm
- convenient diversion via Select button
- spray type hand shower: Rain, TurboRain, IntenseRain
- maximum flow rate at 3 bar: 15 l/min
- minimum flow pressure: 1 bar
- profile stand pipe: round
- shower bar diameter: 22 mm
- pivot connector prevent hose from tangling
- hand shower holder inclination angle can be adjusted by 45°

Consisting of:
- **Ecostat** Shower thermostat Comfort for exposed installation (# 13116000)
- **Croma Select E** Hand shower Vario (# 26812400)
- **Unica** Shower bar Croma 90 cm (# 26506000)
- **Isiflex** Shower hose 160 cm (# 28276000)

Alternative sizes:
- **Croma Select E** Shower system for exposed installation Vario with Ecostat Comfort thermostat and shower bar 65 cm

White/Chrome | 27081400 | 289.10

Measurements within scale drawings are in mm.

Croma Select S shower sets with thermostatic mixer for exposed installation

	finish	code no.	Euro

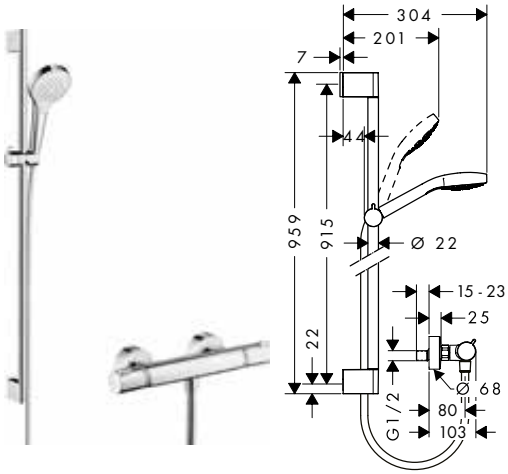

Croma Select S Shower system for exposed installation Vario with Ecostat Comfort thermostat and shower bar 90 cm

White/Chrome 27014400 295.20

- consists of: hand shower, shower thermostat, shower bar, slider, shower hose
- shower head size: 110 mm
- convenient diversion via Select button
- spray type hand shower: Rain, IntenseRain, TurboRain
- maximum flow rate at 3 bar: 15 l/min
- minimum flow pressure: 1 bar
- profile stand pipe: round
- shower bar diameter: 22 mm
- pivot connector prevent hose from tangling
- hand shower holder inclination angle can be adjusted by 45°

Consisting of:
- **Croma Select S** Hand shower Vario (# 26802400)
- **Unica** Shower bar Croma 90 cm with Isiflex shower hose 160 cm (# 26504000)
- **Ecostat** Shower thermostat Comfort for exposed installation (# 13116000)

Alternative sizes:
- **Croma Select S** Shower system for exposed installation Vario with Ecostat Comfort thermostat and shower bar 65 cm — White/Chrome 27013400 289.10



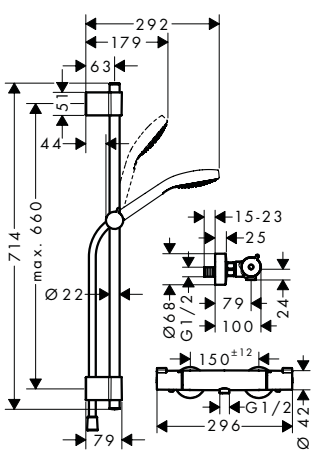

Croma Select S Shower system for exposed installation Vario with Ecostat 1001 CL thermostat and shower bar 72 cm

White/Chrome 27833400 248.40

- consists of: hand shower, shower thermostat, shower bar, slider, shower hose
- shower head size: 110 mm
- convenient diversion via Select button
- spray type hand shower: Rain, IntenseRain, TurboRain
- maximum flow rate at 3 bar: 14,7 l/min
- minimum flow pressure: 1,2 bar
- profile stand pipe: round
- shower bar diameter: 22 mm
- variable drilling hole distance: 400 - 660 mm
- pivot connector prevent hose from tangling
- 90° position adjustable hand shower holder, pivots left and right, up and down
- wall supports of plastic

Consisting of:
- **Croma Select S** Hand shower Vario (# 26802400)
- **Ecostat** Shower thermostat 1001 CL for exposed installation (# 13211000)
- **Unica** Shower bar Varia 72 cm (# 27355000)
- **Isiflex** Shower hose 160 cm (# 28276000)

Measurements within scale drawings are in mm.

Croma 100 shower sets with thermostatic mixer for exposed installation



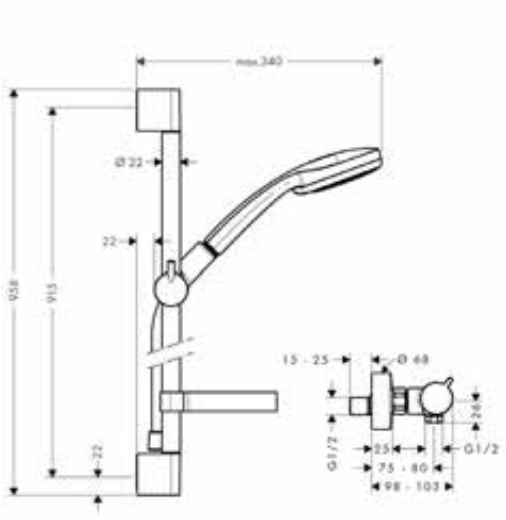

	finish	code no.	Euro
Croma 100 Shower system for exposed installation Vario with Ecostat Comfort thermostat and shower bar 90 cm · consists of: hand shower, shower thermostat, shower bar, slider, soap dish, shower hose · shower head size: 100 mm · spray type adjustment by turning spray disc · spray type hand shower: normal spray, Rain, Massage spray, Shampoo spray · maximum flow rate at 3 bar: 18 l/min · minimum flow pressure: 1 bar · profile stand pipe: round · shower bar diameter: 22 mm · pivot connector prevent hose from tangling · 90° position adjustable hand shower holder, pivots left and right, up and down	Chrome	27035000	334.20
Consisting of: · **Croma 100** Hand shower Vario (# 28535000) · **Unica** Shower bar C 90 cm with Isiflex shower hose 160 cm (#) · **Ecostat** Shower thermostat Comfort for exposed installation (# 13116000) · **Casetta** Soap dish C (# 28678000)			
Alternative sizes: · **Croma 100** Shower system for exposed installation Vario with Ecostat Comfort thermostat and shower bar 65 cm	Chrome	27034000	327.10
Water saving EcoSmart version: · **Croma 100** Shower system for exposed installation Vario EcoSmart 9 l/min with Ecostat Comfort thermostat and shower bar 90 cm	Chrome	27033000	340.00
Optional parts: · Wall bar spacer	Chrome	97450000	8.70

Measurements within scale drawings are in mm.

Technical specifications and units of measure are subject to change.

	finish	code no.	Euro
Croma 100 Shower system for exposed installation Vario with Ecostat Comfort thermostat and shower bar 65 cm	Chrome	27034000	327.10



XXL Performance

- consists of: hand shower, shower thermostat, shower bar, slider, soap dish, shower hose
- shower head size: 100 mm
- spray type adjustment by turning spray disc
- spray type hand shower: normal spray, Rain, Massage spray, Shampoo spray
- maximum flow rate at 3 bar: 18 l/ min
- minimum flow pressure: 1 bar
- profile stand pipe: round
- shower bar diameter: 22 mm
- pivot connector prevent hose from tangling
- 90° position adjustable hand shower holder, pivots left and right, up and down

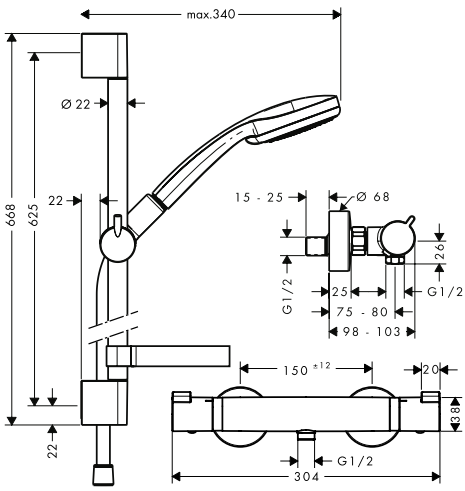

Consisting of:

- **Ecostat** Shower thermostat Comfort for exposed installation (# 13116000)
- **Croma 100** Hand shower Vario (# 28535000)
- **Unica** Shower bar C 65 cm with Isiflex shower hose 160 cm (# 27611000)
- **Casetta** Soap dish C (# 28678000)

Alternative sizes:

Croma 100 Shower system for exposed installation Vario with Ecostat Comfort thermostat and shower bar 90 cm	Chrome	27035000	334.20

Water saving EcoSmart version:

Croma 100 Shower system for exposed installation Vario EcoSmart 9 l/ min with Ecostat Comfort thermostat and shower bar 65 cm	Chrome	27032000	332.90

Measurements within scale drawings are in mm.

Technical specifications and units of measure are subject to change.

	finish	code no.	Euro



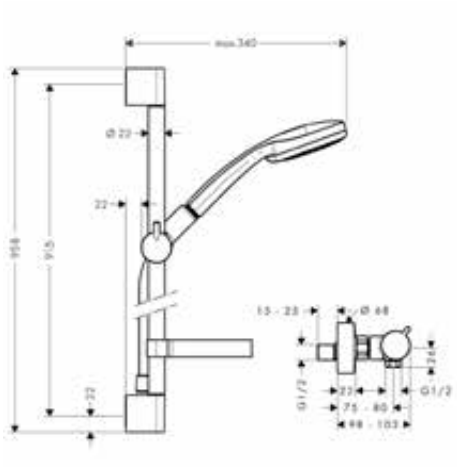

Croma 100 Shower system for exposed installation Multi with Ecostat Comfort thermostat and shower bar 90 cm

	finish	code no.	Euro
	Chrome	27085000	357.90

XXL Performance

- consists of: hand shower, shower thermostat, shower bar, slider, soap dish, shower hose
- spray type overhead shower: Rain, MonoRain, Massage spray
- spray type adjustment by turning spray disc
- maximum flow rate at 3 bar: 17 l/ min
- minimum flow pressure: 1 bar
- profile stand pipe: round
- shower bar diameter: 22 mm
- pivot connector prevent hose from tangling
- 90° position adjustable hand shower holder, pivots left and right, up and down

Consisting of:
- **Ecostat** Shower thermostat Comfort for exposed installation (# 13116000)
- **Croma 100** Hand shower Multi (# 28536000)
- **Unica** Shower bar C 90 cm with Isiflex shower hose 160 cm (# 27610000)
- **Casetta** Soap dish C (# 28678000)

Alternative sizes:

· **Croma 100** Shower system for exposed installation Multi with Ecostat Comfort thermostat and shower bar 65 cm	Chrome	27086000	333.80

Optional parts:

· Wall bar spacer	Chrome	97450000	8.70

Crometta shower sets with thermostatic mixer for exposed installation



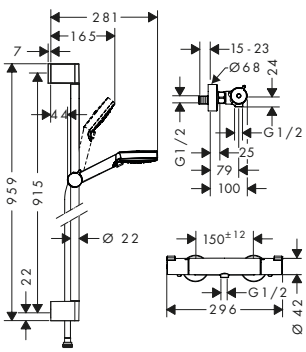

Crometta Shower system for exposed installation Vario with Ecostat 1001 CL thermostat and shower bar 90 cm

	finish	code no.	Euro
	White/Chrome	27813400	227.40

XXL Performance

- consists of: hand shower, shower thermostat, shower bar, slider, shower hose
- spray type overhead shower: Rain, IntenseRain
- spray type adjustment by turning spray disc
- maximum flow rate at 3 bar: 14 l/ min
- minimum flow pressure: 1 bar
- profile stand pipe: round
- shower bar diameter: 22 mm
- pivot connector prevent hose from tangling
- 90° position adjustable hand shower holder, pivots left and right, up and down

Consisting of:
- **Crometta** Hand shower Vario (# 26330400)
- **Ecostat** Shower thermostat 1001 CL for exposed installation (# 13211000)
- **Unica** Shower bar Croma 90 cm (# 26506000)
- **Isiflex** Shower hose 160 cm (# 28276000)

Alternative sizes:

· **Crometta** Shower system for exposed installation Vario with Ecostat 1001 CL thermostat and shower bar 65 cm	White/Chrome	27812400	218.00

Measurements within scale drawings are in mm.

Technical specifications and units of measure are subject to change.

Unica'E wall bars



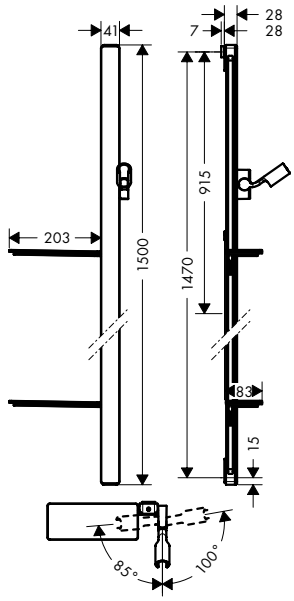

	finish	code no.	Euro
Unica Shower bar E 150 cm with Isiflex shower hose 160 cm and shelves	Chrome	27645000	434.00

- consists of: shower bar, shower hose, slider, shelves
- pivot connector prevent hose from tangling
- hose nut: for shower hoses with conical nut on both sides
- 90° position adjustable hand shower holder, pivots left and right, up and down
- shelf made of safety glass
- wall bar type: flat aluminium profile with safety glass finish
- profile stand pipe: flat
- bar width: 41 mm
- metal hand shower holder
- self-locking hand shower holder
- slider steplessly adjustable
- wall supports of plastic
- surface shower bar: chrome, white or black

Consisting of:
- **Isiflex** Shower hose 160 cm (# 28276000)
- **Casetta** Soap dish/ shelf E (# 26511000)

Alternative sizes:

· **Unica** Shower bar E 90 cm with Isiflex shower hose 160 cm	Chrome	27640000	319.70
	White/Chrome	27640400	319.70

Optional parts:

· **Casetta** Soap dish/ shelf E	Chrome	26511000	68.50

Modern style wall bars



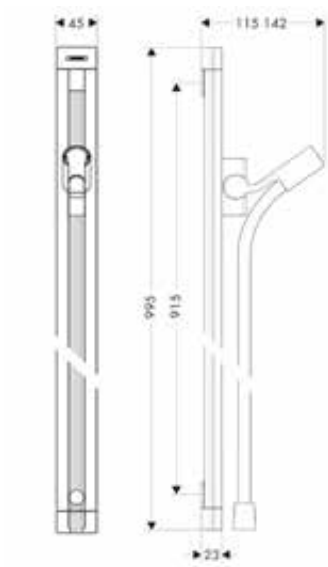

Unica Shower bar Raindance 90 cm with Isiflex shower hose 160 cm	Chrome	27636000	286.60

- consists of: shower bar, shower hose, slider
- wall bar type: flat and slim aluminium profile
- profile stand pipe: square
- bar width: 45 mm
- metal hand shower holder
- self-locking hand shower holder
- slider steplessly adjustable

Consisting of:
- **Isiflex** Shower hose 160 cm (# 28276000)

Optional parts:

· **Raindance** Corner fitting set		28694000	35.00
· **Casetta** Soap dishes Raindance	Chrome	28698000	79.00
· **Raindance** Wall bar spacer	Chrome	98993000	8.20



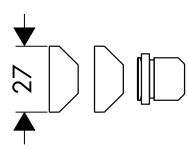

Raindance Corner fitting set	28694000	35.00

- material: plastic

Measurements within scale drawings are in mm.

	finish	code no.	Euro
Raindance Wall bar spacer	Chrome	98993000	8.20



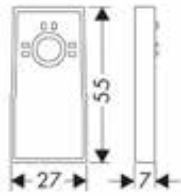

- also usable as an extension
- material: plastic

NEW

Unica Shower bar Pulsify S 65 cm with push slider and Isiflex shower hose 160 cm — Chrome — 24400000 — 70.00

Push slider



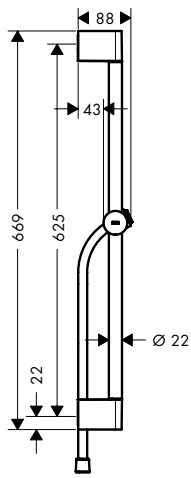

- consists of: shower bar, slider, shower hose
- hand shower holder inclination angle can be adjusted by 45°
- profile stand pipe: round
- shower bar diameter: 22 mm
- height-adjustable slider with locking push-button slider
- hand shower holder with locking mechanism
- slider steplessly adjustable
- wall supports of plastic

Consisting of:
- **Isiflex** Shower hose 160 cm (# 28276000)

Alternative sizes:
- **Unica** Shower bar Pulsify S 90 cm with push slider and Isiflex shower hose 160 cm — Chrome — 24401000 — 77.00

NEW

Unica Shower bar Croma 90 cm with Isiflex shower hose 160 cm — Chrome — 26504000 — 74.20



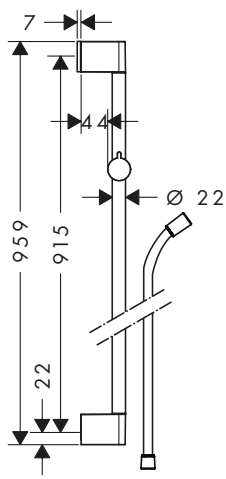

- consists of: shower bar, shower hose, slider
- hand shower holder inclination angle can be adjusted by 45°
- profile stand pipe: round
- shower bar diameter: 22 mm
- hand shower holder with locking mechanism
- hand shower holder inclination angle adjustable in 2 steps
- wall supports of plastic

Consisting of:
- **Isiflex** Shower hose 160 cm (# 28276000)

Alternative sizes:
- **Unica** Shower bar Croma 65 cm with Isiflex shower hose 160 cm — Chrome — 26503000 — 67.90

Alternative products:
- **Unica** Shower bar Croma 90 cm — Chrome — 26506000 — 55.20

Optional parts:
- Wall bar spacer — Chrome — 97450000 — 8.70

Measurements within scale drawings are in mm.

Technical specifications and units of measure are subject to change.

	finish	code no.	Euro



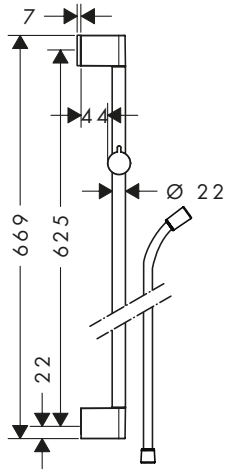

Unica Shower bar Croma 65 cm with Isiflex shower hose 160 cm

Chrome	26503000	67.90

- consists of: shower bar, shower hose, slider
- hand shower holder inclination angle can be adjusted by 45°
- profile stand pipe: round
- shower bar diameter: 22 mm
- hand shower holder with locking mechanism
- hand shower holder inclination angle adjustable in 2 steps
- wall supports of plastic

Consisting of:
- **Isiflex** Shower hose 160 cm (# 28276000)

Alternative sizes:

· **Unica** Shower bar Croma 90 cm with Isiflex shower hose 160 cm	Chrome	26504000	74.20

Alternative products:

· **Unica** Shower bar Croma 65 cm	Chrome	26505000	49.00

Optional parts:

· Wall bar spacer	Chrome	97450000	8.70



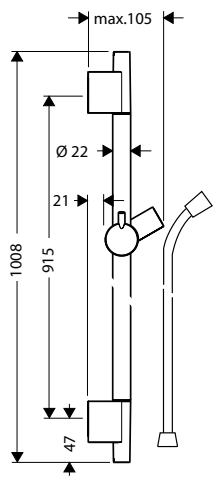

Unica Shower bar S Puro 90 cm with Isiflex shower hose 160 cm

Chrome	28631000	129.00
Brushed Bronze	28631140	193.60
Brushed Black Chrome	28631340	193.60
Matt Black	28631670	180.60
Matt White	28631700	180.60
Brushed Nickel	28631820	193.60
Polished Gold Optic	28631990	193.60

- consists of: shower bar, shower hose, slider
- profile stand pipe: round
- shower bar diameter: 22 mm
- metal hand shower holder
- hand shower holder with locking mechanism
- slider steplessly adjustable
- inclination angle adjustable via raster

Consisting of:
- **Isiflex** Shower hose 160 cm (# 28276XXX)

Alternative sizes:

· **Unica** Shower bar S Puro 65 cm with Isiflex shower hose 160 cm	Chrome	28632000	120.50
	Brushed Bronze	28632140	180.80
	Brushed Black Chrome	28632340	180.80
	Matt Black	28632670	168.60
	Matt White	28632700	168.60
	Polished Gold Optic	28632990	180.80

Optional parts:

· **Casetta** Soap dish S Puro	Chrome	28679000	38.60
· **Casetta** Soap dishes Unica 88	Transparent	28675000	28.20
· Wall bar spacer	Chrome	97450000	8.70

Measurements within scale drawings are in mm.

Technical specifications and units of measure are subject to change.

	finish	code no.	Euro



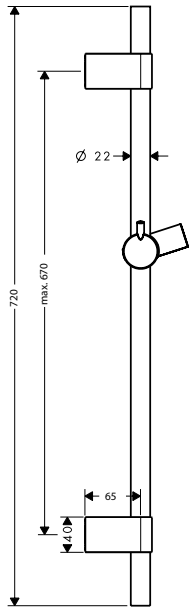

Unica Shower bar S Puro Reno 72 cm — Chrome — 28662000 — 120.90

- consists of: shower bar, slider
- profile stand pipe: round
- shower bar diameter: 22 mm
- variable drilling hole distance: 400 - 670 mm
- hand shower holder with locking mechanism
- slider steplessly adjustable
- inclination angle adjustable via raster
- wall supports of plastic
- variable wall support

Alternative sizes:

- **Unica** Shower bar S Puro Reno 105 cm — Chrome — 28663000 — 127.30



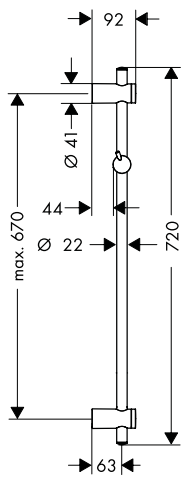

Unica Shower bar Reno 72 cm — Chrome — 27704000 — 73.30

- consists of: shower bar, slider
- profile stand pipe: round
- shower bar diameter: 22 mm
- variable drilling hole distance: 400 - 670 mm
- hand shower holder with locking mechanism
- hand shower holder inclination angle adjustable in 2 steps
- wall supports of plastic
- variable wall support



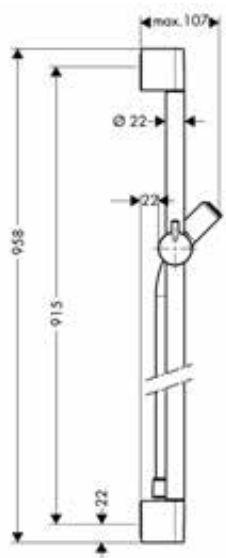

Unica Shower bar C 90 cm with Isiflex shower hose 160 cm — Chrome — 27610000 — 86.70

- consists of: shower bar, shower hose, slider
- profile stand pipe: round
- shower bar diameter: 22 mm
- translucent plastic shower slide
- hand shower holder with locking mechanism
- slider steplessly adjustable
- inclination angle adjustable via raster

Consisting of:

- **Isiflex** Shower hose 160 cm (# 28276000)

Alternative sizes:

- **Unica** Shower bar C 65 cm with Isiflex shower hose 160 cm — Chrome — 27611000 — 77.30

Optional parts:

- **Casetta** Soap dish C — Chrome — 28678000 — 15.70
- Wall bar spacer — Chrome — 97450000 — 8.70

Measurements within scale drawings are in mm.

Technical specifications and units of measure are subject to change.

	finish	code no.	Euro
Unica Shower bar Crometta 90 cm with Metaflex shower hose 160 cm	Chrome	27614000	59.80



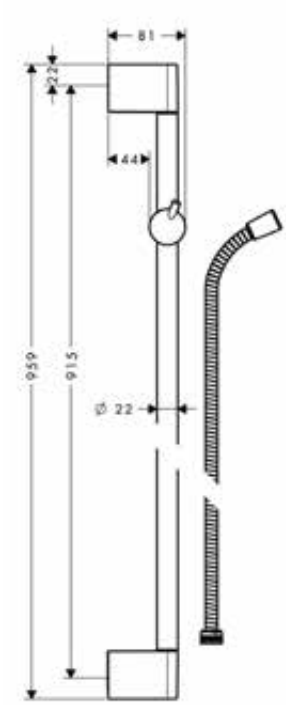

- consists of: shower bar, shower hose, slider
- profile stand pipe: round
- shower bar diameter: 22 mm
- hand shower holder with locking mechanism
- hand shower holder inclination angle adjustable in 2 steps

Consisting of:
- **Metaflex** Shower hose 160 cm (# 28266000)

Alternative sizes:

Unica Shower bar Crometta 65 cm with Metaflex shower hose 160 cm	Chrome	27615000	56.50

Alternative products:

Unica Shower bar Crometta 90 cm	Chrome	27609000	53.70

Optional parts:

Casetta Soap dish C	Chrome	28678000	15.70
Wall bar spacer	Chrome	97450000	8.70

Unica Shower bar Varia 105 cm	Chrome	27356000	61.90



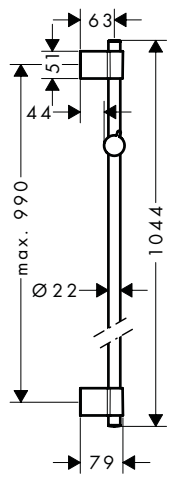

- consists of: shower bar, slider
- profile stand pipe: round
- shower bar diameter: 22 mm
- variable drilling hole distance: 400 mm - 970 mm
- hand shower holder inclination angle adjustable in 2 steps
- wall supports of plastic
- variable wall support

Alternative sizes:

Unica Shower bar Varia 72 cm	Chrome	27355000	55.90

Wall bar spacer	Chrome	97450000	8.70



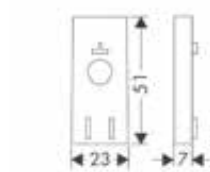

- material: plastic

Measurements within scale drawings are in mm.

Unica Comfort wall bars

	finish	code no.	Euro
Unica Shower bar Comfort 110 cm left	White/Chrome	26403400	318.20



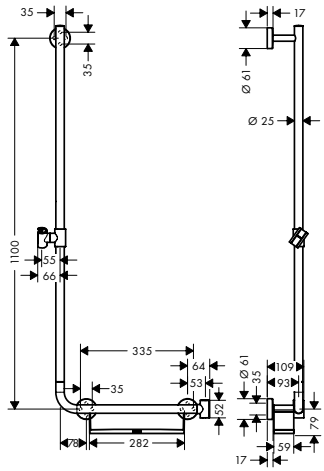

- consists of: shower bar, storage basket, slider
- infinitely height-adjustable
- shower holder can be removed
- 90° position adjustable hand shower holder, pivots left and right, up and down
- shelf made of plastic, finish white, shelf can be removed for cleaning
- profile stand pipe: round
- shower bar diameter: 25 mm
- metal hand shower holder
- wall supports of metal

Alternative products:

· **Unica** Shower bar Comfort 110 cm right	White/Chrome	26404400	318.20

Optional parts:

· **Unica** Foot support Comfort	Chrome	26329000	153.30

Unica Shower bar Comfort 110 cm right	White/Chrome	26404400	318.20



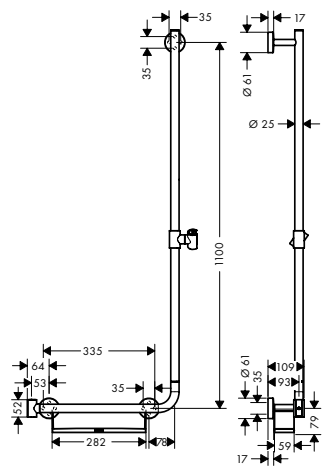

- consists of: shower bar, storage basket, slider
- infinitely height-adjustable
- shower holder can be removed
- 90° position adjustable hand shower holder, pivots left and right, up and down
- shelf can be removed for cleaning
- profile stand pipe: round
- shower bar diameter: 25 mm
- metal hand shower holder
- hand shower holder with locking mechanism
- wall supports of metal

Alternative products:

· **Unica** Shower bar Comfort 110 cm left	White/Chrome	26403400	318.20

Optional parts:

· **Unica** Foot support Comfort	Chrome	26329000	153.30

Unica Shower bar Comfort 90 cm	Chrome	26402000	200.30



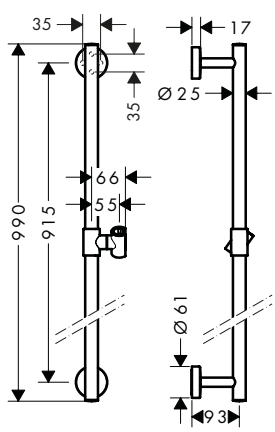

- consists of: shower bar, slider
- infinitely height-adjustable
- 90° position adjustable hand shower holder, pivots left and right, up and down
- profile stand pipe: round
- shower bar diameter: 25 mm
- metal hand shower holder
- wall supports of metal

Alternative sizes:

· **Unica** Shower bar Comfort 65 cm	Chrome	26401000	188.60

Optional parts:

· **Unica** Grab handle Comfort with shelf and shower holder	White/Chrome	26328400	149.40
· **Unica** Foot support Comfort	Chrome	26329000	153.30

Measurements within scale drawings are in mm.

Technical specifications and units of measure are subject to change.

Classic style wall bars

	finish	code no.	Euro
Unica Shower bar Classic 65 cm with Sensoflex shower hose 160 cm	Chrome Brushed Nickel	27617000 27617820	173.60 260.50

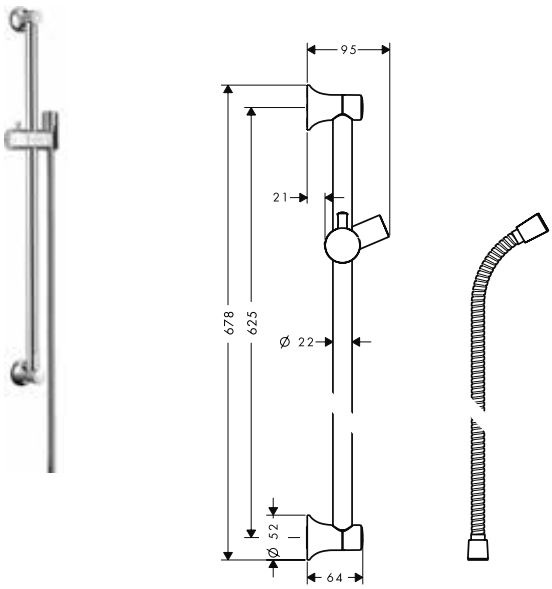

- consists of: shower bar, shower hose, slider
- profile stand pipe: round
- shower bar diameter: 22 mm
- metal hand shower holder
- hand shower holder with locking mechanism
- slider steplessly adjustable
- inclination angle adjustable via raster

Consisting of:
- **Sensoflex** Metal shower hose 160 cm (# 28136000)

Optional parts:

· **Casetta** Soap dish C	Chrome	28678000	15.70

Wall bar spacer for Unica wall bar S	Chrome	96184000	8.20





- material: plastic

Casetta Soap dish C	Chrome	28678000	15.70



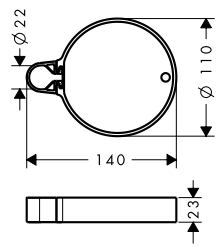

- with mounting material
- for shower bars with Ø 22 mm

Casetta Soap dish E	Chrome	26519000	19.90



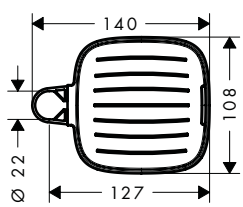

- with mounting material
- for shower bars with Ø 18 / 22 / 25 mm

Casetta Soap dish S Puro	Chrome	28679000	38.60



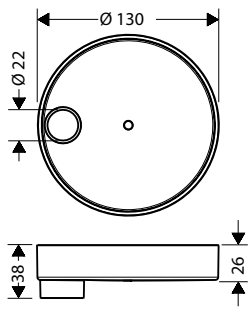

- for shower bars with Ø 22 mm

Measurements within scale drawings are in mm.

Technical specifications and units of measure are subject to change.

Rainfinity shower holder sets



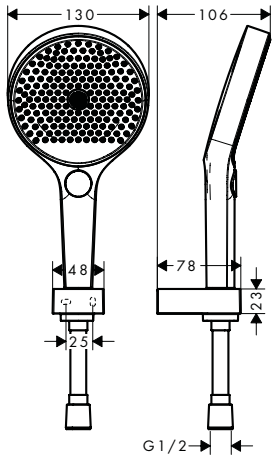

Rainfinity Shower holder set 130 3jet with shower hose 125 cm

- consists of: hand shower, shower holder, shower hose
- shower head size: 130 mm
- spray type: PowderRain, Intense PowderRain, MonoRain
- convenient diversion via Select button
- maximum flow rate at 3 bar: 14 l/min
- minimum flow pressure: 1 bar
- pivot connector prevent hose from tangling
- wall mounting: screw fastening
- wall supports of metal

Consisting of:
- **Rainfinity** Hand shower 130 3jet (# 26864XXX)
- **Isiflex** Shower hose 125 cm (# 28272XXX)
- Shower holder Porter E (# 28387XXX)

finish	code no.	Euro
Chrome	26852000	165.90
Matt White	26852700	215.60

Alternative sizes:
- **Rainfinity** Shower holder set 130 3jet with shower hose 160 cm

finish	code no.	Euro
Chrome	26851000	168.00
Matt White	26851700	218.40



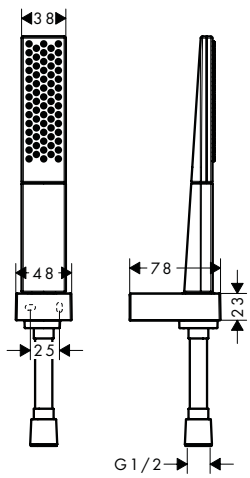

Rainfinity Shower holder set 100 1jet with shower hose 125 cm

- consists of: baton hand shower, shower holder, shower hose
- shower head size: 100 x 38 mm
- spray type: PowderRain
- maximum flow rate at 3 bar: 13,8 l/min
- minimum flow pressure: 1 bar
- pivot connector prevent hose from tangling
- wall mounting: screw fastening
- wall supports of metal

Consisting of:
- **Rainfinity** Baton hand shower 100 1jet (# 26866XXX)
- **Isiflex** Shower hose 125 cm (# 28272XXX)
- Shower holder Porter E (# 28387XXX)

finish	code no.	Euro
Chrome	26857000	149.60
Matt White	26857700	194.40

Alternative sizes:
- **Rainfinity** Shower holder set 100 1jet with shower hose 160 cm

finish	code no.	Euro
Chrome	26856000	151.70
Matt White	26856700	197.30

Measurements within scale drawings are in mm.

Technical specifications and units of measure are subject to change.

Raindance Select E shower holder sets



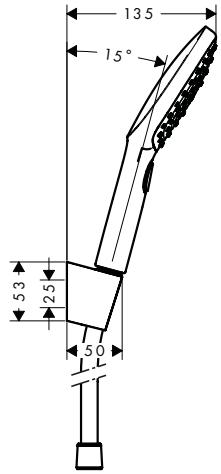

	finish	code no.	Euro
Raindance Select E Shower holder set 120 3jet with shower hose 160 cm	Chrome	26720000	126.70
	White/Chrome	26720400	126.70

Select · AirPower · Quick Clean · XXL Performance

- consists of: hand shower, shower holder, shower hose
- shower head size: 120 mm
- spray type: RainAir, Rain, Whirl
- convenient diversion via Select button
- maximum flow rate at 3 bar: 14,4 l/min
- minimum flow pressure: 1 bar
- pivot connector prevent hose from tangling
- Shower holder of plastic

Consisting of:
- **Raindance Select E** Hand shower 120 3jet (# 26520XXX)
- Shower holder Porter S (# 28331000)
- **Isiflex** Shower hose 160 cm (# 28276000)

Alternative sizes:

· **Raindance Select E** Shower holder set 120 3jet with shower hose 125 cm	Chrome	26700000	124.50

Raindance Select S shower holder sets



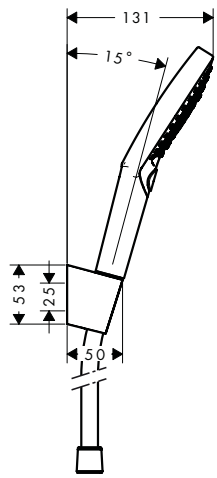

Raindance Select S Shower holder set 120 3jet PowderRain with shower hose 125 cm	Chrome	27669000	127.70

Select · Quick Clean · XXL Performance

- consists of: hand shower, shower holder, shower hose
- shower head size: 125 mm
- spray type: PowderRain, Rain, Whirl
- convenient diversion via Select button
- maximum flow rate at 3 bar: 11 l/min
- minimum flow pressure: 1 bar
- pivot connector prevent hose from tangling
- Shower holder of plastic

Consisting of:
- **Raindance Select S** Hand shower 120 3jet PowderRain (# 26014000)
- Shower holder Porter S (# 28331000)
- **Isiflex** Shower hose 125 cm (# 28272000)

Alternative sizes:

· **Raindance Select S** Shower holder set 120 3jet PowderRain with shower hose 160 cm	Chrome	27668000	129.90

Measurements within scale drawings are in mm.

	finish	code no.	Euro



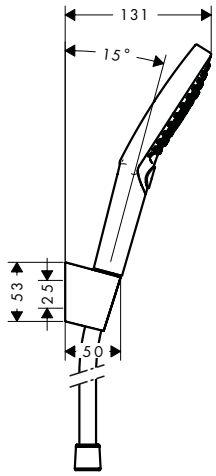

Raindance Select S Shower holder set 120 3jet with shower hose 160 cm

- consists of: hand shower, shower holder, shower hose
- shower head size: 125 mm
- spray type: RainAir, Rain, Whirl
- convenient diversion via Select button
- maximum flow rate at 3 bar: 15 l/min
- minimum flow pressure: 1 bar
- pivot connector prevent hose from tangling
- Shower holder of plastic

	finish	code no.	Euro
	Chrome	26721000	126.70
	White/Chrome	26721400	126.70

Select · AirPower · Quick Clean · XXL Performance

Consisting of:
- **Raindance Select S** Hand shower 120 3jet (# 26530XXX)
- Shower holder Porter S (# 28331000)
- **Isiflex** Shower hose 160 cm (# 28276000)

Alternative sizes:

	finish	code no.	Euro
· **Raindance Select S** Shower holder set 120 3jet with shower hose 125 cm	Chrome	26701000	124.50

Pulsify Select S shower holder sets

NEW



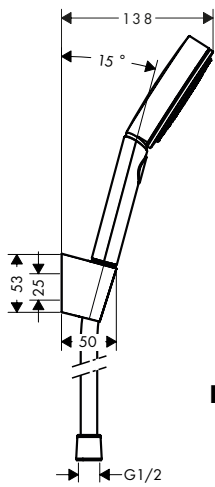

Pulsify Select S Shower holder set 105 3jet Relaxation with shower hose 125 cm

- consists of: hand shower, shower holder, shower hose
- shower head size: 105 mm
- spray type: PowderRain, IntenseRain, Massage spray
- convenient diversion via Select button
- maximum flow rate at 3 bar: 11,4 l/min
- minimum flow pressure: 1 bar
- wall supports of plastic

	finish	code no.	Euro
	Chrome	24302000	55.00
	Matt Black	24302670	71.50
	Matt White	24302700	71.50

Select · Quick Clean · XXL Performance

Consisting of:

NEW
- **Pulsify Select S** Hand shower 105 3jet Relaxation (# 24110XXX)
- Shower holder Porter S (# 28331XXX)
- **Isiflex** Shower hose 125 cm (# 28272XXX)

Alternative products:

		finish	code no.	Euro
NEW	· **Pulsify S** Shower holder set 105 1jet with shower hose 125 cm	Chrome	24301000	49.00
		Matt Black	24301670	63.70
		Matt White	24301700	63.70
NEW	· **Pulsify Select S** Shower holder set 105 3jet Relaxation with shower hose 160 cm	Chrome	24303000	59.00
		Matt Black	24303670	76.70
		Matt White	24303700	76.70

Measurements within scale drawings are in mm.

Technical specifications and units of measure are subject to change.



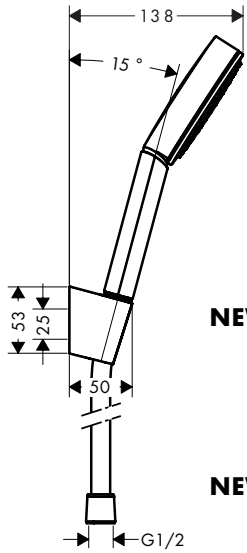

		finish	code no.	Euro
Pulsify S Shower holder set 105 1jet with shower hose 125 cm		Chrome	24301000	49.00
· consists of: hand shower, shower holder, shower hose		Matt Black	24301670	63.70
· shower head size: 105 mm		Matt White	24301700	63.70
· spray type: PowderRain				
· maximum flow rate at 3 bar: 13,5 l/ min				
· minimum flow pressure: 1 bar				
· wall supports of plastic				
Consisting of:	NEW			
· **Pulsify S** Hand shower 105 1jet (# 24120XXX)				
· Shower holder Porter S (# 28331XXX)				
· **Isiflex** Shower hose 125 cm (# 28272XXX)				
Alternative products:				
· **Pulsify Select S** Shower holder set 105 3jet Relaxation with shower hose 125 cm	NEW	Chrome	24302000	55.00
		Matt Black	24302670	71.50
		Matt White	24302700	71.50
· **Pulsify Select S** Shower holder set 105 3jet Relaxation with shower hose 160 cm	NEW	Chrome	24303000	59.00
		Matt Black	24303670	76.70
		Matt White	24303700	76.70

Croma Select E shower holder sets



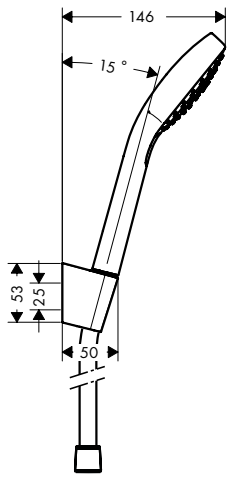

Croma Select E Shower holder set Vario with shower hose 125 cm	White/Chrome	26425400	75.40
· consists of: hand shower, shower holder, shower hose			
· shower head size: 110 mm			
· spray type: Rain, IntenseRain, TurboRain			
· convenient diversion via Select button			
· maximum flow rate at 3 bar: 15 l/ min			
· minimum flow pressure: 1 bar			
· pivot connector prevent hose from tangling			
· Shower holder of plastic			
Consisting of:			
· **Croma Select E** Hand shower Vario (# 26812400)			
· Shower holder Porter S (# 28331000)			
· **Isiflex** Shower hose 125 cm (# 28272000)			
Alternative sizes:			
· **Croma Select E** Shower holder set Vario with shower hose 160 cm	White/Chrome	26413400	79.30

Measurements within scale drawings are in mm.

	finish	code no.	Euro



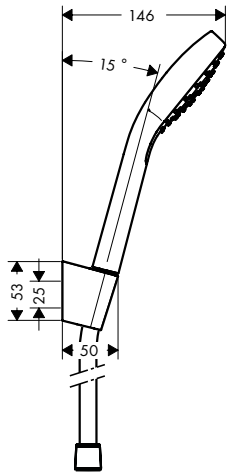

Croma Select E Shower holder set 1jet with shower hose 125 cm

White/Chrome | 26424400 | 63.10

Quick Clean · XXL Performance

- consists of: hand shower, shower holder, shower hose
- shower head size: 110 mm
- spray type: Rain
- maximum flow rate at 3 bar: 16 l/ min
- minimum flow pressure: 1 bar
- pivot connector prevent hose from tangling
- Shower holder of plastic

Consisting of:
- **Croma E** Hand shower 1jet (# 26814400)
- Shower holder Porter S (# 28331000)
- **Isiflex** Shower hose 125 cm (# 28272000)

Alternative sizes:
- **Croma Select E** Shower holder set 1jet with shower hose 160 cm — White/Chrome | 26412400 | 66.50

Croma Select S shower holder sets



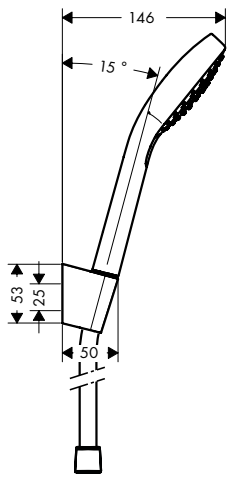

Croma Select S Shower holder set Vario with shower hose 125 cm

White/Chrome | 26421400 | 75.40

Select · Quick Clean · XXL Performance

- consists of: hand shower, shower holder, shower hose
- shower head size: 110 mm
- spray type: Rain, IntenseRain, TurboRain
- convenient diversion via Select button
- maximum flow rate at 3 bar: 15 l/ min
- minimum flow pressure: 1 bar
- pivot connector prevent hose from tangling
- Shower holder of plastic

Consisting of:
- **Croma Select S** Hand shower Vario (# 26802400)
- Shower holder Porter S (# 28331000)
- **Isiflex** Shower hose 125 cm (# 28272000)

Alternative sizes:
- **Croma Select S** Shower holder set Vario with shower hose 160 cm — White/Chrome | 26411400 | 79.30



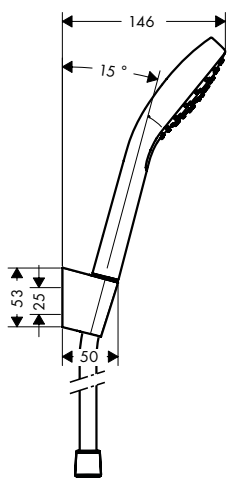

Croma Select S Shower holder set 1jet with shower hose 125 cm

White/Chrome | 26420400 | 63.10

Quick Clean · XXL Performance

- consists of: hand shower, shower holder, shower hose
- shower head size: 110 mm
- spray type: Rain
- maximum flow rate at 3 bar: 16 l/ min
- minimum flow pressure: 1 bar
- pivot connector prevent hose from tangling
- Shower holder of plastic

Consisting of:
- **Croma S** Hand shower 1jet (# 26804400)
- Shower holder Porter S (# 28331000)
- **Isiflex** Shower hose 125 cm (# 28272000)

Alternative sizes:
- **Croma Select S** Shower holder set 1jet with shower hose 160 cm — White/Chrome | 26410400 | 66.50

Measurements within scale drawings are in mm.

Technical specifications and units of measure are subject to change.

Croma 100 shower holder sets

	finish	code no.	Euro



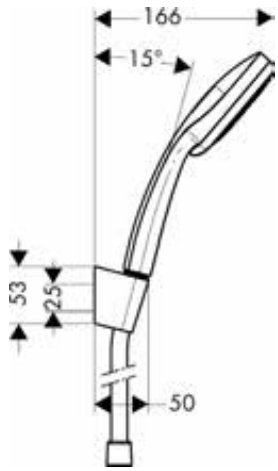

Croma 100 Shower holder set Multi with shower hose 125 cm

- consists of: hand shower, shower holder, shower hose
- shower head size: 100 mm
- spray type: MonoRain, Massage spray, Rain
- spray type adjustment by turning spray disc
- maximum flow rate at 3 bar: 19 l/ min
- minimum flow pressure: 1 bar
- pivot connector prevent hose from tangling
- Shower holder of plastic

Consisting of:
- **Croma 100** Hand shower Multi (# 28536000)
- Shower holder Porter S (# 28331000)
- **Isiflex** Shower hose 125 cm (# 28272000)

	Chrome	27593000	93.70

Alternative sizes:

· **Croma 100** Shower holder set Multi with shower hose 160 cm	Chrome	27595000	100.10



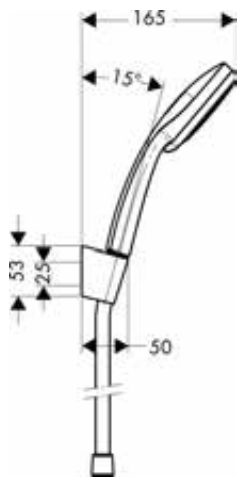

Croma 100 Shower holder set Vario with shower hose 125 cm

- consists of: hand shower, shower holder, shower hose
- shower head size: 100 mm
- spray type: Rain, normal spray, Shampoo spray, Massage spray
- spray type adjustment by turning spray disc
- maximum flow rate at 3 bar: 18 l/ min
- minimum flow pressure: 1 bar
- pivot connector prevent hose from tangling
- Shower holder of plastic

Consisting of:
- **Croma 100** Hand shower Vario (# 28535000)
- Shower holder Porter S (# 28331000)
- **Isiflex** Shower hose 125 cm (# 28272000)

	Chrome	27592000	67.40

Alternative sizes:

· **Croma 100** Shower holder set Vario with shower hose 160 cm	Chrome	27594000	69.90

Measurements within scale drawings are in mm.

	finish	code no.	Euro





Croma 100 Shower holder set Mono with shower hose 125 cm — Chrome — 27574000 — 58.60

Quick Clean · XXL Performance

- consists of: hand shower, shower holder, shower hose
- shower head size: 100 mm
- spray type: Rain
- maximum flow rate at 3 bar: 16 l/ min
- minimum flow pressure: 1 bar
- pivot connector prevent hose from tangling
- Shower holder of plastic

Consisting of:
- **Croma 100** Hand shower 1jet (# 28580000)
- Shower holder Porter S (# 28331000)
- **Isiflex** Shower hose 125 cm (# 28272000)

Alternative sizes:
- **Croma 100** Shower holder set Mono with shower hose 160 cm — Chrome — 27575000 — 60.40

Crometta shower holder sets



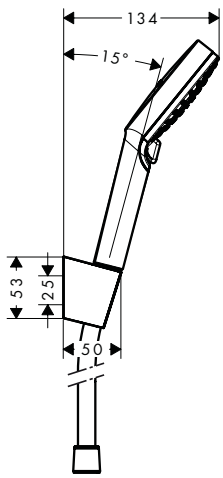

Crometta Shower holder set Vario with shower hose 125 cm — White/Chrome — 26691400 — 37.00

Quick Clean · XXL Performance

- consists of: hand shower, shower holder, shower hose
- shower head size: 100 mm
- spray type: Rain, IntenseRain
- spray type adjustment by turning spray disc
- maximum flow rate at 3 bar: 13,8 l/ min
- minimum flow pressure: 1 bar
- pivot connector prevent hose from tangling
- Shower holder of plastic

Consisting of:
- **Crometta** Hand shower Vario (# 26330400)
- Shower holder Porter S (# 28331000)
- **Isiflex** Shower hose 125 cm (# 28272000)

Alternative sizes:
- **Crometta** Shower holder set Vario with shower hose 160 cm — White/Chrome — 26692400 — 39.60

Water saving EcoSmart version:
- **Crometta** Shower holder set Vario EcoSmart 9 l/ min with shower hose 125 cm — White/Chrome — 26693400 — 39.60
- **Crometta** Shower holder set Vario EcoSmart 9 l/ min with shower hose 160 cm — White/Chrome — 26694400 — 41.90

Measurements within scale drawings are in mm.

Technical specifications and units of measure are subject to change.



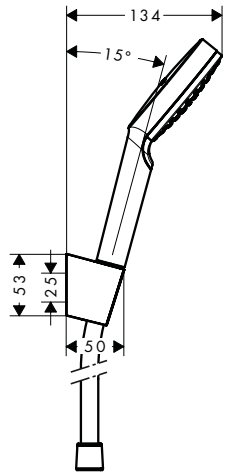

		finish	code no.	Euro
	Crometta Shower holder set 1jet with shower hose 125 cm · consists of: hand shower, shower holder, shower hose · shower head size: 100 mm · spray type: Rain · maximum flow rate at 3 bar: 14 l/ min · minimum flow pressure: 1 bar · pivot connector prevent hose from tangling · Shower holder of plastic	White/Chrome	26690400	34.80
	Consisting of: · **Crometta** Hand shower 1jet (# 26331400) · Shower holder Porter S (# 28331000) · **Isiflex** Shower hose 125 cm (# 28272000)			
	Alternative sizes:			
	· **Crometta** Shower holder set 1jet with shower hose 160 cm	White/Chrome	26567400	37.00
	· **Crometta** Shower holder set 1jet EcoSmart 9 l/ min with shower hose 160 cm	White/Chrome	26569400	39.60
	Water saving EcoSmart version:			
	· **Crometta** Shower holder set 1jet EcoSmart 9 l/ min with shower hose 125 cm	White/Chrome	26568400	37.00
	· **Crometta** Shower holder set 1jet EcoSmart 9 l/ min with shower hose 160 cm	White/Chrome	26569400	39.60

Crometta 85 shower holder sets





		finish	code no.	Euro
	Crometta 85 Shower holder set Vario with shower hose 125 cm · consists of: hand shower, shower holder, shower hose · shower head size: 85 mm · spray type: Vario spray, normal spray · spray type adjustment by turning spray disc · maximum flow rate at 3 bar: 17 l/ min · minimum flow pressure: 1 bar · Shower holder of plastic	Chrome	27558000	37.40
	Consisting of: · **Crometta 85** Hand shower Vario (# 28562000) · Shower holder Porter C (# 27521000) · **Metaflex** Shower hose 125 cm (# 28262000)			
	Alternative sizes:			
	· **Crometta 85** Shower holder set Vario with shower hose 160 cm	Chrome	27559000	39.60

Measurements within scale drawings are in mm.

Technical specifications and units of measure are subject to change.

	finish	code no.	Euro
			
Crometta 85 Shower holder set Mono with shower hose 125 cm · consists of: hand shower, shower holder, shower hose · shower head size: 85 mm · spray type: normal spray · maximum flow rate at 3 bar: 16 l/min · minimum flow pressure: 1 bar · Shower holder of plastic **Consisting of:** · **Crometta 85** Hand shower Mono (# 28585000) · Shower holder Porter C (# 27521000) · **Metaflex** Shower hose 125 cm (# 28262000)	Chrome	27576000	32.40
Alternative sizes: · **Crometta 85** Shower holder set Mono with shower hose 160 cm	Chrome	27577000	35.60

Vernis Blend shower holder sets



NEW

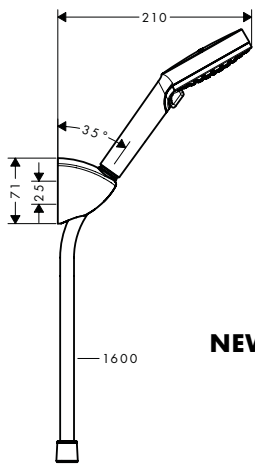

Vernis Blend Shower holder set Vario with shower hose 160 cm · consists of: hand shower, shower holder, shower hose · shower head size: 100 mm · spray type: Rain, IntenseRain · spray type adjustment by turning spray disc · maximum flow rate at 3 bar: 15,2 l/min **Consisting of:** · **Vernis Blend** Hand shower Vario (# 26270000) · Shower holder Porter C (# 27521000) · **Metaflex** Shower hose 160 cm (# 28266000)	Chrome	26273000	36.50
NEW			
Water saving EcoSmart version: · **Vernis Blend** Shower holder set Vario EcoSmart with shower hose 160 cm	Chrome	26278000	36.50
NEW			

Bidette



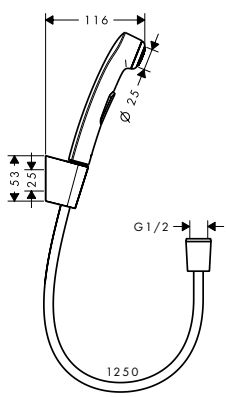

Bidette hand shower 1jet with shower holder and pressure shower hose 125 cm · consists of: bidette hand shower, shower holder, chrome-colored shower hose · maximum flow rate at 3 bar: 6 l/min · minimum flow pressure: 1 bar · with non-return valve · we recommend using this product with a shut-off valve in the line · Shower holder of plastic **Consisting of:** · Shower holder Porter S (# 28331000)	Chrome	32129000	86.40
Alternative sizes: · Bidette hand shower 1jet with shower holder and pressure shower hose 160 cm	Chrome	32128000	88.30

Measurements within scale drawings are in mm.

Technical specifications and units of measure are subject to change.

	finish	code no.	Euro
Bidette hand shower 1jet with shower holder and pressure resistant shower hose 125 cm	White/Chrome	32127000	49.20



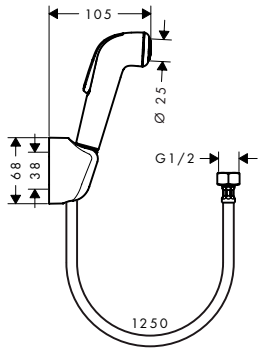

- consists of: bidette hand shower, shower holder, chrome-colored shower hose
- maximum flow rate at 3 bar: 6 l/min
- with non-return valve
- we recommend using this product with a shut-off valve in the line
- additional comment: surface shower hose chrome

Consisting of:
- Shower holder (# 28321000)

Alternative sizes:

· Bidette hand shower 1jet with shower holder and pressure resistant shower hose 160 cm	White/Chrome	32122000	51.90

Modern style shower holder



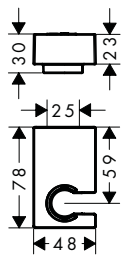

Shower holder Porter E

- fixed holding position
- for hoses with conical nut
- metal

Chrome	28387000	48.80
Brushed Bronze	28387140	73.20
Brushed Black	28387340	73.20
Chrome Matt Black	28387670	68.30
Matt White	28387700	68.30
Polished Gold Optic	28387990	73.20



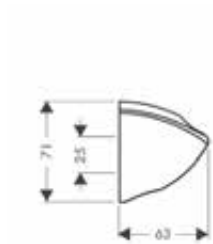

Shower holder Porter C

- fixed holding position
- for hoses with conical nut
- plastic

Chrome	27521000	19.10



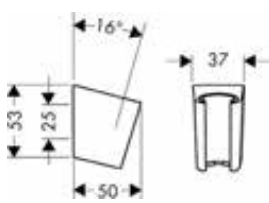

Shower holder Porter S

- fixed holding position
- for hoses with conical nut
- plastic

Chrome	28331000	25.40
Brushed Bronze	28331140	38.10
Brushed Black	28331340	38.10
Chrome Matt Black	28331670	35.60
Matt White	28331700	35.60
Stainless Steel Optic	28331800	38.10
Polished Gold Optic	28331990	38.10



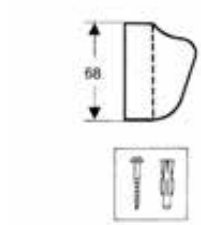

Shower holder

- fixed holding position
- for hoses with conical nut
- plastic

Chrome	28321000	21.30

Measurements within scale drawings are in mm.

Technical specifications and units of measure are subject to change.

	finish	code no.	Euro
Shower holder Porter Reno · fixed holding position · for hoses with conical nut · metal	Chrome	28335000	36.70



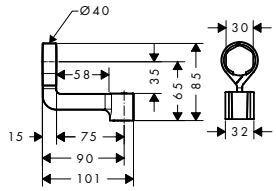

Shower holder Porter Vario · shower holder inclination angle can be adjusted continously · for hoses with conical nut · metal	Chrome	28328000	36.70



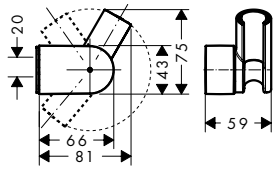

Classic style shower holder

Shower holder porter classic · fixed holding position · for hoses with conical nut · plastic	Chrome	28324000	29.70



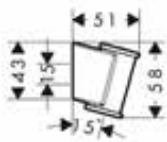

Modern style Fixfit Porter wall outlets



Rainfinity Wall outlet Porter 500 with shower holder and shower shelf left · metal connection angle · 500 mm storage shelf · integrated support function · non-return valve · connection type: DN15 · hose nut: for shower hoses with conical nut on both sides · shelf made of safety glass · surface of the shelf at colour variant -000 = mirror glass, at colour variant -700 = graphite colour, satined	Chrome Matt White	26843000 26843700	357.70 465.00
Alternative products: · **Rainfinity** Wall outlet Porter 500 with shower holder and shower shelf right	Chrome Matt White	26858000 26858700	357.70 465.00

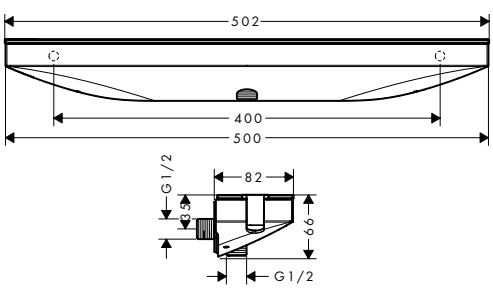

Measurements within scale drawings are in mm.

Technical specifications and units of measure are subject to change.

	finish	code no.	Euro
Rainfinity Wall outlet Porter 500 with shower holder and shower shelf right	Chrome Matt White	26858000 26858700	357.70 465.00



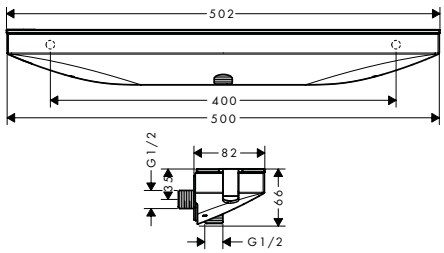

- metal connection angle
- 500 mm storage shelf
- integrated support function
- plastic connection angle with metal ball joint
- non-return valve
- connection type: DN15
- hose nut: for shower hoses with conical nut on both sides
- shelf made of safety glass
- surface of the shelf at colour variant -000 = mirror glass, at colour variant -700 = graphite colour, satined

FixFit Wall outlet E with shower holder	Chrome	26485000	85.00



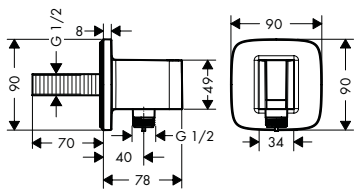

- consists of: wall connector, escutcheon
- fixed holding position
- for hoses with conical nut
- with non-return valve
- metal housing with internal water supply made of plastic

FixFit Wall outlet S with shower holder	Chrome	26487000	85.00



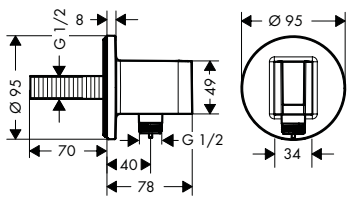

- consists of: wall connector, escutcheon
- fixed holding position
- for hoses with conical nut
- with non-return valve
- metal housing with internal water supply made of plastic

FixFit Wall outlet square with shower holder	Chrome	26486000	85.00



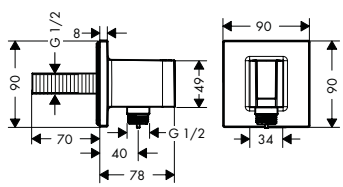

- consists of: wall connector, escutcheon
- fixed holding position
- for hoses with conical nut
- with non-return valve
- metal housing with internal water supply made of plastic

FixFit Wall outlet Porter 300 with shower holder and shower shelf	Chrome White/Chrome	26456000 26456400	160.60 160.60



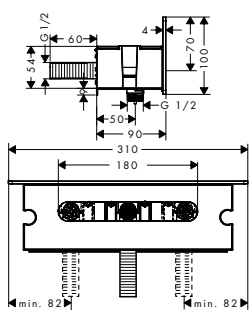

- metal connection angle
- 300 mm storage shelf
- integrated support function on both sides
- non-return valve
- connection type: G ½
- flexible positioning, adjustment to left or right by 77.5 mm
- hose nut: for shower hoses with conical nut on both sides
- safety glass in white and chrom

Measurements within scale drawings are in mm.

Technical specifications and units of measure are subject to change.

Modern style Fixfit wall outlets

	finish	code no.	Euro
 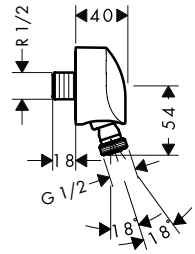 **FixFit** Wall outlet E with non-return valve and pivot joint · shower hose connection with ball joint · plastic connection angle with metal ball joint · non-return valve	Chrome	27505000	31.50
 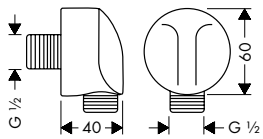 **FixFit** Wall outlet E without non-return valve · metal connection angle · connection type: G ½ · hose nut: for shower hoses with conical nut on both sides · material cover: plastic	Chrome Brushed Bronze Brushed Black Chrome Matt Black Matt White Polished Gold Optic	27454000 27454140 27454340 27454670 27454700 27454990	27.30 41.00 41.00 38.20 38.20 41.00
Alternative products: · **FixFit** Wall outlet E with non-return valve	Chrome	27458000	52.80
 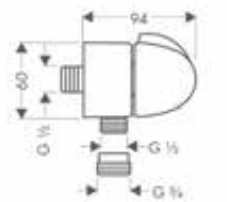 **FixFit** Wall outlet E stop with non-return valve and shut-off valve · with integrated shut-off valve in metal · with ceramic valve · non-return valve · 90° shut-off unit -> ¼ turn · free flow 30 l/ min at 3 bar · Adapter from G½ to G¾ connection	Chrome	27452000	89.50
 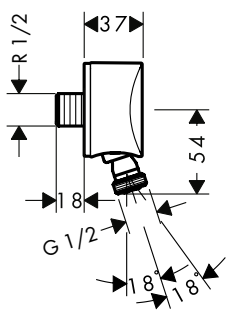 **FixFit** Wall outlet S with non-return valve and pivot joint · shower hose connection with ball joint · plastic connection angle with metal ball joint · non-return valve	Chrome	27506000	35.70
 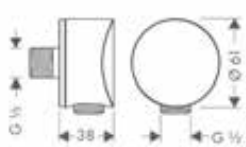 **FixFit** Wall outlet S without non-return valve · metal connection angle	Chrome	27453000	32.70
Alternative products: · **FixFit** Wall outlet S with non-return valve · **FixFit** Wall outlet S with non-return valve and synthetic connection angle	Chrome Chrome Brushed Bronze Brushed Black Chrome Matt Black Matt White Polished Gold Optic	27456000 26453000 26453140 26453340 26453670 26453700 26453990	58.90 27.00 40.50 40.50 37.80 37.80 40.50

Measurements within scale drawings are in mm.

Technical specifications and units of measure are subject to change.

	finish	code no.	Euro
FixFit Wall outlet Square with non-return valve · plastic connection angle · non-return valve	Chrome	26455000	27.00
	Brushed Bronze	26455140	40.50
	Brushed Black	26455340	40.50
	Chrome Matt Black	26455670	37.80
	Matt White	26455700	37.80
	Polished Gold Optic	26455990	40.50
FixFit Wall outlet with non-return valve and pivot joint · shower hose connection with ball joint · plastic connection angle with metal ball joint · non-return valve · connection type: G ½ · hose nut: for shower hoses with conical nut on both sides	Chrome	27414000	42.90
FixFit Wall outlet with non-return valve · plastic connection angle · non-return valve	Chrome	26457000	27.00
	Brushed Bronze	26457140	40.50
	Brushed Black	26457340	40.50
	Chrome Matt Black	26457670	37.80
	Matt White	26457700	37.80
	Polished Gold Optic	26457990	40.50

Classic style Fixfit wall outlet

AXOR Montreux Wall outlet with non-return valve · metal connection angle · non-return valve	Chrome	16884000	41.40
	Brushed Nickel	16884820	62.10
Thread connection · reduction from DN20 to DN15	Chrome	02024000	4.70

Measurements within scale drawings are in mm.

Technical specifications and units of measure are subject to change.

Shower hoses and accessories



Sensoflex
metal shower hoses
page 170



Isiflex
shower hoses
page 170



Comfortflex
shower hoses
page 171



Metaflex
shower hoses
page 171



Sensoflex metal shower hoses



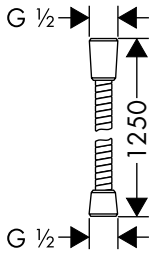

	finish	code no.	Euro
Sensoflex Metal shower hose 125 cm · metal shower hose · with plastic coating, easy to clean · shower hose length: 1.25 m · pivot connector prevent hose from tangling · kink-protected	Chrome	28132000	38.50
Alternative sizes:			
· **Sensoflex** Metal shower hose 160 cm	Chrome	28136000	40.30
· **Sensoflex** Metal shower hose 200 cm	Chrome	28134000	42.30

Isiflex shower hoses



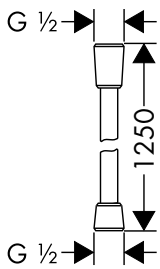

	finish	code no.	Euro
Isiflex Shower hose 125 cm · high-quality shower hose · with plastic coating, easy to clean · shower hose length: 1.25 m · pivot connector prevent hose from tangling · kink-protected	Chrome	28272000	24.80
	Brushed Bronze	28272140	37.10
	Brushed Black Chrome	28272340	37.10
	White	28272450	31.10
	Matt Black	28272670	31.10
	Matt White	28272700	31.10
	Polished Gold Optic	28272990	37.10
Alternative sizes:			
· **Isiflex** Shower hose 160 cm	Chrome	28276000	26.80
	Brushed Bronze	28276140	40.20
	Brushed Black Chrome	28276340	40.20
	White	28276450	33.50
	Matt Black	28276670	37.50
	Matt White	28276700	37.50
	Polished Gold Optic	28276990	40.20
· **Isiflex** Shower hose 200 cm	Chrome	28274000	28.40



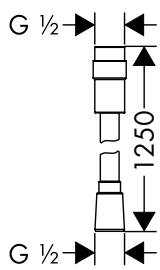

	finish	code no.	Euro
Isiflex Shower hose 125 cm with volume control · high-quality shower hose with metal effect and volume control · with plastic coating, easy to clean · shower hose length: 1.25 m · pivot connector prevent hose from tangling · kink-protected · adjustable flow rate between 6 l/min and 16 l/min	Chrome	28249000	46.10
Alternative sizes:			
· **Isiflex** Shower hose 160 cm with volume control	Chrome	28248000	48.20

Measurements within scale drawings are in mm.

Technical specifications and units of measure are subject to change.

Comfortflex shower hoses



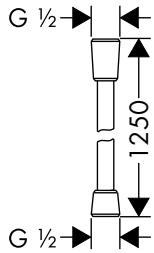

	finish	code no.	Euro
Comfortflex Shower hose 125 cm · high-quality shower hose with metal effect · with plastic coating, easy to clean · shower hose length: 1.25 m · pivot connector prevent hose from tangling · kink-protected	Chrome	28167000	17.40
Alternative sizes:			
· **Comfortflex** Shower hose 160 cm	Chrome	28168000	18.20
· **Comfortflex** Shower hose 200 cm	Chrome	28169000	22.90

Metaflex shower hoses



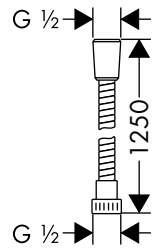

Metaflex Shower hose 125 cm · plastic shower hose with coil winding · with plastic coating, easy to clean · shower hose length: 1.25 m · without pivot joints · kink-protected	Chrome	28262000	13.90
Alternative sizes:			
· **Metaflex** Shower hose 160 cm	Chrome	28266000	14.70
· **Metaflex** Shower hose 200 cm	Chrome	28264000	19.60

Accessories



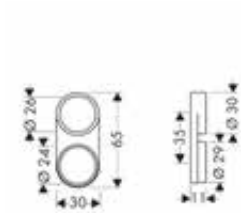

Hose duct · material: transparent plastic	Transparent	28072000	4.40



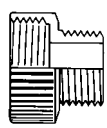

Thread connection · reduction from DN20 to DN15	Chrome	02024000	4.70

Measurements within scale drawings are in mm.

Technical specifications and units of measure are subject to change.

Overhead showers



Rainmaker Select	page 176		Rainfinity	page 181	
Raindance Rainmaker	page 187		Raindance Select S	page 190	
Raindance E	page 193		Raindance S	page 197	
Pulsify S	page 202		Croma Select E	page 204	
Croma Select S	page 205		Croma E	page 206	
Croma	page 207		Crometta E	page 210	
Crometta S	page 211		Vernis Blend	page 213	
Vernis Shape	page 214				

hansgrohe overhead howers

Product ranges at a glance

	Rainmaker Select					**Rainfinity**	
						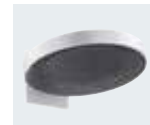	
	Overhead showers 460 3jet	Overhead showers 460 2jet	Overhead showers 460 1jet	Overhead showers 580 3jet	Overhead showers 360 3jet	Overhead showers 360 1jet	Overhead showers 250 3jet
Finish	-400, -600	-400, -600	-400, -600	-400, -600	-000, -140, -340 -670, -700, -990	-000, -140, -340 -670, -700, -990	-000, -140, -340 -670, -700, -990
Wall connection	■	■	■	■	■	■	■
Ceiling connector	■	■	■		■	■	■
Standard	18 l/min	18 l/min	19 l/min	20 l/min	28,1 l/min	21 l/min	20 l/min
EcoSmart 8-9 l/min	■	■	■	■			■
Green							
LowPressure							
Select							
QuickClean	■	■	■	■	■	■	■
XXL Performance	■	■	■	■	■	■	■
AirPower							
PowderRain					■	■	■
			page 176			page 181	

	Raindance S		**Pulsify S**		**Croma Select E**	**Croma Select S**	**Croma E**
		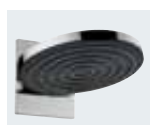		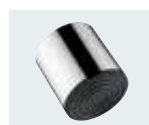			
	Overhead showers 240 1jet PowderRain	Overhead showers 260 2jet	Overhead showers 260 1jet	Overhead showers 105 1jet	Overhead showers 180 2jet	Overhead showers 180 2jet	Overhead showers 280 1jet
Finish	-000, -670, -700	-000, -670, -700	-000, -670, -700	-000, -670, -700	-000, -400	-000, -400	-000
Wall connection	■	■	■	■	■	■	■
Ceiling connector	■				■	■	■
Standard	18 l/min	11,3 l/min	12,3 l/min	11,7 l/min	17 l/min	17 l/min	18,3 l/min
EcoSmart 8-9 l/min		■	■		■	■	■
Green				■			
LowPressure							
Select					■	■	
QuickClean	■	■	■	■	■	■	■
XXL Performance	■	■	■	■	■	■	■
AirPower							■
PowderRain	■	■	■	■			
	page 197		page 202		page 204	page 205	page 206

■ Available

	Raindance Rainmaker	**Raindance Rainfall**	**Raindance Select S**		**Raindance E**		**Raindance S**
							
Overhead showers 250 1jet	Overhead showers 600 3jet	Overhead showers 180 2jet	Overhead showers 300 2jet	Overhead showers 240 2jet	Overhead showers 300 1jet	Overhead showers 360 1jet	Overhead showers 300 1jet
-000, -140, -340 -670, -700, -990	-000	-000, -400	-000, -400	-000, -400	-000, -140, -340 -670, -700, -990	-000	-000
■		■	■	■	■	■	■
■	■		■	■	■	■	■
19 l/min	25 l/min	24 l/min	17 l/min	17 l/min	17 l/min	16,5 l/min	18 l/min
■				■	■		
			■	■			
■	■	■	■	■	■	■	■
■	■	■	■	■	■	■	■
	■	■	■	■	■	■	■
■							
page 181	page 187	page 189	page 190		page 193		page 197

Croma		**Croma 100**	**Crometta E**	**Crometta S**	**Crometta 85**	**Vernis Blend**	**Vernis Shape**
							
Overhead showers 280 1jet	Overhead showers 220 1jet	Overhead showers Multi	Overhead showers 240 1jet	Overhead showers 240 1jet	Overhead showers Multi	Overhead showers 200 1jet	Overhead showers 230 1jet
-000, -140, -340 -670, -700, -990	-000	-000	-000	-000	-000	-000, -670	-000, -670
■	■	■	■	■	■	■	■
■	■		■	■		■	■
15,6 l/min	19 l/min	20 l/min	18 l/min	18 l/min	15 l/min	12,4 l/min	12,4 l/min
■	■		■	■		■	■
						■	■
			■	■		■	■
■	■	■	■	■	■	■	■
■	■	■	■	■		■	■
■	■						
page 207		page 209	page 210	page 211	page 212	page 213	page 214

Rainmaker Select

	finish	code no.	Euro
Rainmaker Select Overhead shower 580 3jet	White/Chrome	24001400	2,696.60
	Black/Chrome	24001600	2,696.60



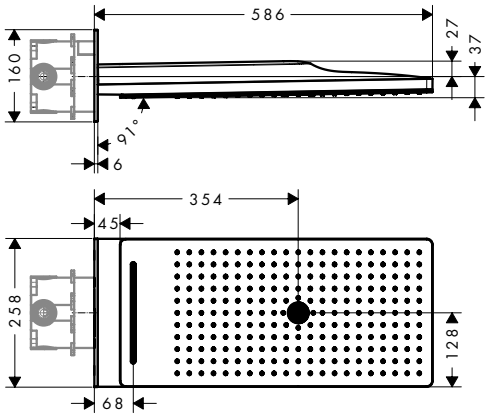

- consists of: overhead shower, wall connector
- shower head size: 586 x 258 mm
- spray type: Rain, RainFlow, MonoRain
- material spray disc: plexiglas
- easy cleanable spray disc in glass optics
- maximum flow rate at 3 bar: 20 l/ min
- flow rate Rain spray (at 3 bar): 17 l/ min
- flow rate RainFlow spray (at 3 bar): 17 l/ min
- flow rate Mono spray (at 3 bar): 20 l/ min
- minimum flow pressure: 1,7 bar
- the 3 spray zones must be controlled via 3 valves or a diverter valve with 3 outlets
- spray disc removable for cleaning
- installation: wall-mounted - for installation on iBox
- connection dimension: DN15/DN20
- not included: basic set

Water saving EcoSmart version:

· **Rainmaker Select** Overhead shower 580 3jet EcoSmart 9 l/ min	White/Chrome	24011400	2,696.60

Required parts:

· Basic set iBox universal		01800180	137.30

Optional parts:

· **ShowerSelect Glass** Valve for concealed installation for 3 functions	White/Chrome	15736400	516.00
· **ShowerSelect Glass** Thermostat HighFlow for concealed installation for 1 function and additional outlet	White/Chrome	15735400	710.20



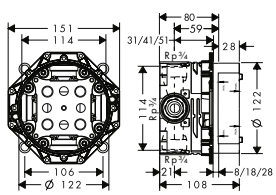

Basic set iBox universal

		01800180	137.30

- suitable for all shower, bath tub and thermostat finish sets for concealed installation
- connection thread Rp ¾
- rotationally-symmetric installation
- sound-decoupled installation
- connection dimension: DN20

Alternative products:

· Basic set iBox universal with shut-off unit		01850180	178.40

Optional parts:

· Extension iBox universal basic set 2.5 cm		13595000	50.40
· Fastening rail set for iBox universal		96615000	35.80
· Assembly aid for iBox universal		93500000	13.00

Measurements within scale drawings are in mm.

Technical specifications and units of measure are subject to change.



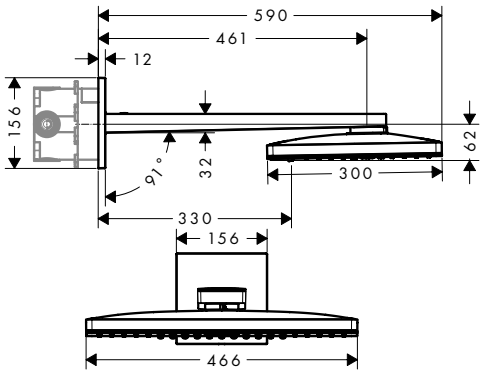

	finish	code no.	Euro
Rainmaker Select Overhead shower 460 3jet with shower arm · consists of: overhead shower, shower arm, escutcheon · shower head size: 466 x 300 mm · spray type: Rain, RainStream, MonoRain · material spray disc: plexiglas · easy cleanable spray disc in glass optics · shower arm length 461 mm · maximum flow rate at 3 bar: 18 l/ min · flow rate Rain spray (at 3 bar): 18 l/ min · flow rate RainStream spray (at 3 bar): 15 l/ min · flow rate Mono spray (at 3 bar): 18 l/ min · minimum flow pressure: 1,5 bar · the 3 spray zones must be controlled via 3 valves or a diverter valve with 3 outlets · spray disc removable for cleaning · overhead shower removable for cleaning · installation: wall-mounted - for installation on iBox · connection dimension: DN15 · not included: basic set	White/Chrome Black/Chrome	24007400 24007600	2,451.60 2,451.60
Water saving EcoSmart version: · **Rainmaker Select** Overhead shower 460 3jet EcoSmart 9 l/ min with shower arm	White/Chrome	24017400	2,451.60
Required parts: · Basic set iBox universal		01800180	137.30
Optional parts: · **ShowerSelect Glass** Valve for concealed installation for 3 functions	White/Chrome	15736400	516.00
· **ShowerSelect Glass** Thermostat HighFlow for concealed installation for 1 function and additional outlet	White/Chrome	15735400	710.20

Measurements within scale drawings are in mm.



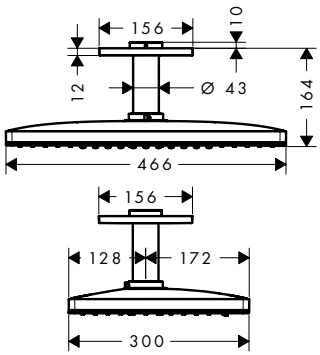

	finish	code no.	Euro
Rainmaker Select Overhead shower 460 3jet with ceiling connector	White/Chrome	24006400	2,328.80
	Black/Chrome	24006600	2,328.80

- consists of: overhead shower, ceiling connector, escutcheon
- shower head size: 466 x 300 mm
- spray type: Rain, RainStream, MonoRain
- ball-joint: overhead shower angle adjustable
- material spray disc: plexiglas
- easy cleanable spray disc in glass optics
- brass ceilling connector
- ceiling connection length: 100 mm
- maximum flow rate at 3 bar: 23 l/min
- flow rate Rain spray (at 3 bar): 17 l/min
- flow rate RainStream spray (at 3 bar): 22 l/min
- flow rate Mono spray (at 3 bar): 23 l/min
- minimum flow pressure: 1,5 bar
- the 3 spray zones must be controlled via 3 valves or a diverter valve with 3 outlets
- spray disc removable for cleaning
- overhead shower removable for cleaning
- installation: ceiling
- connection dimension: DN15
- not included: basic set

Water saving EcoSmart version:			
· **Rainmaker Select** Overhead shower 460 3jet EcoSmart 9 l/min with ceiling connector	White/Chrome	24016400	2,328.80
Required parts:			
· **Rainmaker Select** Basic set for overhead shower with ceiling connector		24010180	245.20
Optional parts:			
· **ShowerSelect Glass** Valve for concealed installation for 3 functions	White/Chrome	15736400	516.00
· **ShowerSelect Glass** Thermostat HighFlow for concealed installation for 1 function and additional outlet	White/Chrome	15735400	710.20



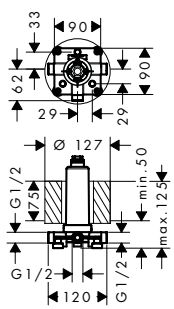

Rainmaker Select Basic set for overhead shower with ceiling connector		24010180	245.20

- includes polystyrene sheathing as a placeholder during installation

Optional parts:			
· **Rainmaker Select** Overhead shower 460 1jet EcoSmart 9 l/min with ceiling connector	White/Chrome	24012400	1,593.60
· **Rainmaker Select** Overhead shower 460 1jet with ceiling connector	White/Chrome	24002400	1,593.60
	Black/Chrome	24002600	1,593.60
· **Rainmaker Select** Overhead shower 460 2jet EcoSmart 9 l/min with ceiling connector	White/Chrome	24014400	2,083.90
· **Rainmaker Select** Overhead shower 460 2jet with ceiling connector	White/Chrome	24004400	2,083.90
	Black/Chrome	24004600	2,083.90
· **Rainmaker Select** Overhead shower 460 3jet with ceiling connector	White/Chrome	24006400	2,328.80
	Black/Chrome	24006600	2,328.80
· **Rainmaker Select** Overhead shower 460 3jet EcoSmart 9 l/min with ceiling connector	White/Chrome	24016400	2,328.80

Measurements within scale drawings are in mm.

Technical specifications and units of measure are subject to change.



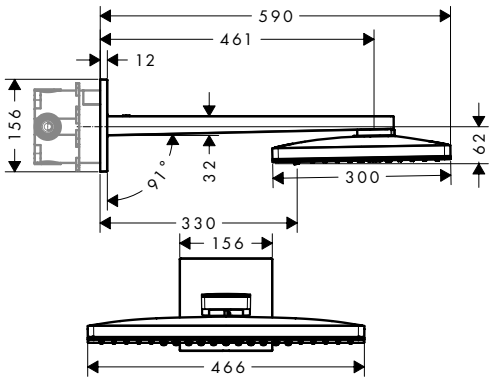

	finish	code no.	Euro
Rainmaker Select Overhead shower 460 2jet with shower arm · consists of: overhead shower, shower arm, escutcheon · shower head size: 466 x 300 mm · spray type: Rain, RainStream · material spray disc: plexiglas · easy cleanable spray disc in glass optics · shower arm length 461 mm · maximum flow rate at 3 bar: 18 l/ min · flow rate Rain spray (at 3 bar): 18 l/ min · flow rate RainStream spray (at 3 bar): 15 l/ min · minimum flow pressure: 1,5 bar · the 2 spray zones must be controlled via 2 valves or a diverter valve with 2 outlets · spray disc removable for cleaning · overhead shower removable for cleaning · installation: wall-mounted - for installation on iBox · connection dimension: DN15 · not included: basic set	White/Chrome Black/Chrome	24005400 24005600	2,206.30 2,206.30
Water saving EcoSmart version: · **Rainmaker Select** Overhead shower 460 2jet EcoSmart 9 l/ min with shower arm	White/Chrome	24015400	2,206.30
Required parts: · Basic set iBox universal		01800180	137.30
Optional parts: · **ShowerSelect Glass** Valve for concealed installation for 3 functions	White/Chrome	15736400	516.00
· **ShowerSelect Glass** Thermostat HighFlow for concealed installation	White/Chrome	15734400	516.00

Measurements within scale drawings are in mm.

	finish	code no.	Euro



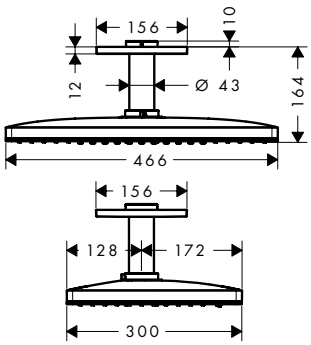

Rainmaker Select Overhead shower 460 2jet with ceiling connector

- consists of: overhead shower, ceiling connector, escutcheon
- shower head size: 466 x 300 mm
- spray type: Rain, RainStream
- material spray disc: plexiglas
- easy cleanable spray disc in glass optics
- brass ceilling connector
- ceiling connection length: 100 mm
- maximum flow rate at 3 bar: 21 l/min
- flow rate Rain spray (at 3 bar): 21 l/min
- flow rate RainStream spray (at 3 bar): 18 l/min
- minimum flow pressure: 1,5 bar
- the 2 spray zones must be controlled via 2 valves or a diverter valve with 2 outlets
- spray disc removable for cleaning
- overhead shower removable for cleaning
- installation: ceiling
- connection dimension: DN15
- not included: basic set

	finish	code no.	Euro
	White/Chrome	24004400	2,083.90
	Black/Chrome	24004600	2,083.90

Water saving EcoSmart version:

	finish	code no.	Euro
· **Rainmaker Select** Overhead shower 460 2jet EcoSmart 9 l/min with ceiling connector	White/Chrome	24014400	2,083.90

Required parts:

	finish	code no.	Euro
· **Rainmaker Select** Basic set for overhead shower with ceiling connector		24010180	245.20

Optional parts:

	finish	code no.	Euro
· **ShowerSelect Glass** Valve for concealed installation for 3 functions	White/Chrome	15736400	516.00
· **ShowerSelect Glass** Thermostat HighFlow for concealed installation	White/Chrome	15734400	516.00



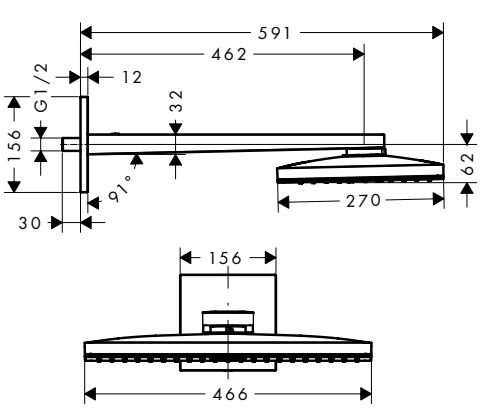

Rainmaker Select Overhead shower 460 1jet with shower arm

- consists of: overhead shower, shower arm, escutcheon
- shower head size: 466 x 270 mm
- spray type: Rain
- material spray disc: plexiglas
- easy cleanable spray disc in glass optics
- shower arm length 462 mm
- maximum flow rate at 3 bar: 19 l/min
- flow rate Rain spray (at 3 bar): 19 l/min
- minimum flow pressure: 1,5 bar
- spray disc removable for cleaning
- overhead shower removable for cleaning
- installation: wall
- connection thread G ½
- connection dimension: DN15

	finish	code no.	Euro
	White/Chrome	24003400	1,716.10
	Black/Chrome	24003600	1,716.10

Water saving EcoSmart version:

	finish	code no.	Euro
· **Rainmaker Select** Overhead shower 460 1jet EcoSmart 9 l/min with shower arm	White/Chrome	24013400	1,716.10

Optional parts:

	finish	code no.	Euro
· **ShowerSelect Glass** Thermostat for concealed installation for 2 functions	White/Chrome	15738400	776.90
· **ShowerTablet Select** Thermostat 700 universal for exposed installation for 2 functions	White/Chrome	13184400	1,225.80

Measurements within scale drawings are in mm.

Technical specifications and units of measure are subject to change.

	finish	code no.	Euro



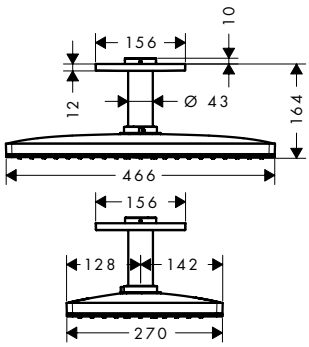

Rainmaker Select Overhead shower 460 1jet with ceiling connector

- consists of: overhead shower, ceiling connector, escutcheon
- shower head size: 466 x 270 mm
- spray type: Rain
- material spray disc: plexiglas
- easy cleanable spray disc in glass optics
- brass ceilling connector
- ceiling connection length: 100 mm
- maximum flow rate at 3 bar: 21 l/min
- flow rate Rain spray (at 3 bar): 21 l/min
- minimum flow pressure: 1,5 bar
- spray disc removable for cleaning
- overhead shower removable for cleaning
- installation: ceiling
- connection dimension: DN15
- not included: basic set

	finish	code no.	Euro
	White/Chrome	24002400	1,593.60
	Black/Chrome	24002600	1,593.60

Water saving EcoSmart version:

- **Rainmaker Select** Overhead shower 460 1jet EcoSmart 9 l/min with ceiling connector — White/Chrome — 24012400 — 1,593.60

Required parts:

- **Rainmaker Select** Basic set for overhead shower with ceiling connector — 24010180 — 245.20

Optional parts:

- **ShowerSelect Glass** Thermostat for concealed installation for 2 functions — White/Chrome — 15738400 — 776.90
- **ShowerTablet Select** Thermostat 700 universal for exposed installation for 2 functions — White/Chrome — 13184400 — 1,225.80

Rainfinity



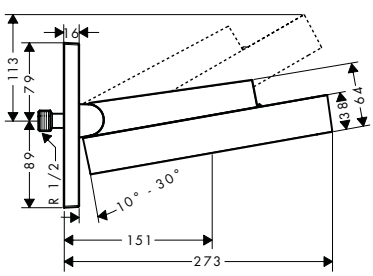

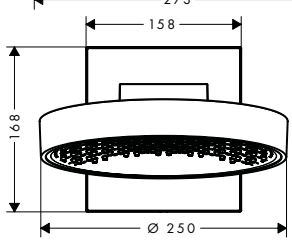

Rainfinity Overhead shower 250 1jet with wall connector

- consists of: overhead shower, wall connector
- shower head size: 250 mm
- spray type: PowderRain
- projection 273 mm
- middle spray disc: 151 mm
- material spray disc: aluminium
- spray disc surface: graphite
- shower head vertically inclinable by 10-30°
- maximum flow rate at 3 bar: 19 l/min
- flow rate PowderRain spray (at 3 bar): 19 l/min
- minimum flow pressure: 1,4 bar
- overhead shower removable for cleaning
- installation: wall
- connection thread G ½
- connection dimension: DN15

	finish	code no.	Euro
	Chrome	26226000	748.00
	Matt White	26226700	972.20

Alternative sizes:

- **Rainfinity** Overhead shower 360 1jet with wall connector — Chrome — 26230000 — 856.30; Brushed Bronze — 26230140 — 1,284.50; Brushed Black — 26230340 — 1,284.50; Chrome Matt Black — 26230670 — 1,113.20; Chrome Matt White — 26230700 — 1,113.20; Polished Gold Optic — 26230990 — 1,284.50

Water saving EcoSmart version:

- **Rainfinity** Overhead shower 250 1jet EcoSmart with wall connector — Chrome — 26227000 — 748.00; Matt White — 26227700 — 972.20

Measurements within scale drawings are in mm.

Technical specifications and units of measure are subject to change.



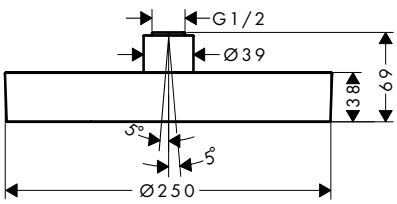

Rainfinity Overhead shower 250 1jet

- shower head size: 250 mm
- spray type: PowderRain
- ball-joint: overhead shower angle (2 x 5°) adjustable
- frame: metal
- material spray disc: aluminium
- spray disc surface: graphite
- maximum flow rate at 3 bar: 16 l/min
- flow rate PowderRain spray (at 3 bar): 16 l/min
- minimum flow pressure: 1 bar
- overhead shower removable for cleaning
- installation: ceiling or wall
- connection thread G ½
- connection dimension: DN15

	finish	code no.	Euro
	Chrome	26228000	628.60
	Brushed Bronze	26228140	943.00
	Brushed Black Chrome	26228340	943.00
	Matt Black	26228670	817.20
	Matt White	26228700	817.20
	Polished Gold Optic	26228990	943.00

Quick Clean | XXL Performance

Required parts (choose one)

· Shower arm square 39 cm	Chrome	27694000	195.00
	Brushed Bronze	27694140	292.70
	Brushed Black Chrome	27694340	292.70
	Matt Black	27694670	273.10
	Matt White	27694700	273.10
	Polished Gold Optic	27694990	292.70
· Ceiling connector S 10 cm	Chrome	27393000	59.10
	Brushed Bronze	27393140	88.60
	Brushed Black Chrome	27393340	88.60
	Matt Black	27393670	82.70
	Matt White	27393700	82.70
	Polished Gold Optic	27393990	88.60
· Ceiling connector S 30 cm	Chrome	27389000	84.10
	Brushed Bronze	27389140	126.60
	Brushed Black Chrome	27389340	126.60
	Matt Black	27389670	118.30
	Matt White	27389700	118.30
	Polished Gold Optic	27389990	126.60

Alternative sizes:

· **Rainfinity** Overhead shower 360 1jet	Chrome	26231000	736.90
	Brushed Bronze	26231140	1,105.50
	Brushed Black Chrome	26231340	1,105.50
	Matt Black	26231670	958.20
	Matt White	26231700	958.20
	Polished Gold Optic	26231990	1,105.50

Water saving EcoSmart version:

· **Rainfinity** Overhead shower 250 1jet EcoSmart	Chrome	26229000	628.60
	Brushed Bronze	26229140	943.00
	Brushed Black Chrome	26229340	943.00
	Matt Black	26229670	817.20
	Matt White	26229700	817.20
	Polished Gold Optic	26229990	943.00

Measurements within scale drawings are in mm.

Technical specifications and units of measure are subject to change.



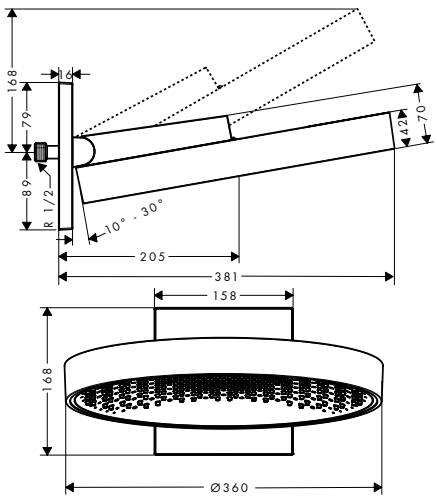

Rainfinity Overhead shower 360 1jet with wall connector

- consists of: overhead shower, wall connector
- shower head size: 360 mm
- spray type: PowderRain
- projection 381 mm
- middle spray disc: 205 mm
- frame: metal
- material spray disc: aluminium
- spray disc surface: graphite
- shower head vertically inclinable by 10-30°
- maximum flow rate at 3 bar: 21 l/ min
- flow rate PowderRain spray (at 3 bar): 21 l/ min
- minimum flow pressure: 2 bar
- overhead shower removable for cleaning
- installation: wall
- connection thread G ½
- connection dimension: DN15

finish	code no.	Euro
Chrome	26230000	856.30
Brushed Bronze	26230140	1,284.50
Brushed Black Chrome	26230340	1,284.50
Matt Black	26230670	1,113.20
Matt White	26230700	1,113.20
Polished Gold Optic	26230990	1,284.50

Quick Clean

XXL Performance

Alternative sizes:

· **Rainfinity** Overhead shower 250 1jet with wall connector	Chrome	26226000	748.00
	Matt White	26226700	972.20

Measurements within scale drawings are in mm.

Technical specifications and units of measure are subject to change.



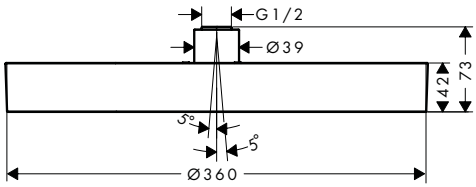

Rainfinity Overhead shower 360 1jet

- shower head size: 360 mm
- spray type: PowderRain
- ball-joint: overhead shower angle (2 x 5°) adjustable
- frame: metal
- material spray disc: aluminium
- spray disc surface: graphite
- maximum flow rate at 3 bar: 20,3 l/min
- flow rate PowderRain spray (at 3 bar): 20,3 l/min
- overhead shower removable for cleaning
- installation: ceiling or wall
- connection thread G ½
- connection dimension: DN15

	finish	code no.	Euro
	Chrome	26231000	736.90
	Brushed Bronze	26231140	1,105.50
	Brushed Black Chrome	26231340	1,105.50
	Matt Black	26231670	958.20
	Matt White	26231700	958.20
	Polished Gold Optic	26231990	1,105.50

Quick Clean | XXL Performance

Required parts (choose one)

· Shower arm square 39 cm	Chrome	27694000	195.00
	Brushed Bronze	27694140	292.70
	Brushed Black Chrome	27694340	292.70
	Matt Black	27694670	273.10
	Matt White	27694700	273.10
	Polished Gold Optic	27694990	292.70
· Ceiling connector S 10 cm	Chrome	27393000	59.10
	Brushed Bronze	27393140	88.60
	Brushed Black Chrome	27393340	88.60
	Matt Black	27393670	82.70
	Matt White	27393700	82.70
	Polished Gold Optic	27393990	88.60
· Ceiling connector S 30 cm	Chrome	27389000	84.10
	Brushed Bronze	27389140	126.60
	Brushed Black Chrome	27389340	126.60
	Matt Black	27389670	118.30
	Matt White	27389700	118.30
	Polished Gold Optic	27389990	126.60

Alternative sizes:

· **Rainfinity** Overhead shower 250 1jet	Chrome	26228000	628.60
	Brushed Bronze	26228140	943.00
	Brushed Black Chrome	26228340	943.00
	Matt Black	26228670	817.20
	Matt White	26228700	817.20
	Polished Gold Optic	26228990	943.00

Measurements within scale drawings are in mm.

Technical specifications and units of measure are subject to change.



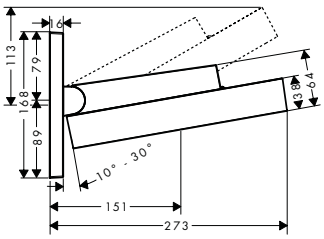

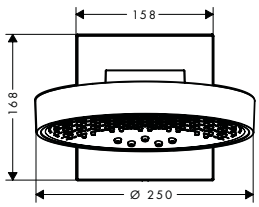

	finish	code no.	Euro
Rainfinity Overhead shower 250 3jet with wall connector	Chrome	26232000	1,073.10
	Matt White	26232700	1,394.90

- consists of: overhead shower, wall connector
- shower head size: 250 mm
- spray type: PowderRain, Intense PowderRain, RainStream
- projection 273 mm
- middle spray disc: 151 mm
- frame: metal
- material spray disc: aluminium
- spray disc surface: graphite
- shower head vertically inclinable by 10-30°
- maximum flow rate at 3 bar: 20 l/ min
- flow rate PowderRain spray (at 3 bar): 20 l/ min
- flow rate Intense PowderRain (at 3 bar): 18 l/ min
- flow rate RainStream spray (at 3 bar): 16 l/ min
- minimum flow pressure: 1,7 bar
- the 3 spray zones must be controlled via 3 valves or a diverter valve with 3 outlets
- overhead shower removable for cleaning
- installation: wall-mounted - for installation on iBox

Alternative sizes:

· **Rainfinity** Overhead shower 360 3jet with wall connector	Chrome	26234000	1,181.40
	Brushed Bronze	26234140	1,772.10
	Brushed Black Chrome	26234340	1,772.10
	Matt Black	26234670	1,535.80
	Matt White	26234700	1,535.80
	Polished Gold Optic	26234990	1,772.10

Water saving EcoSmart version:

· **Rainfinity** Overhead shower 250 3jet EcoSmart with wall connector	Chrome	26233000	1,073.10
	Matt White	26233700	1,394.90

Required parts:

· Basic set iBox universal		01800180	137.30

Measurements within scale drawings are in mm.

Technical specifications and units of measure are subject to change.



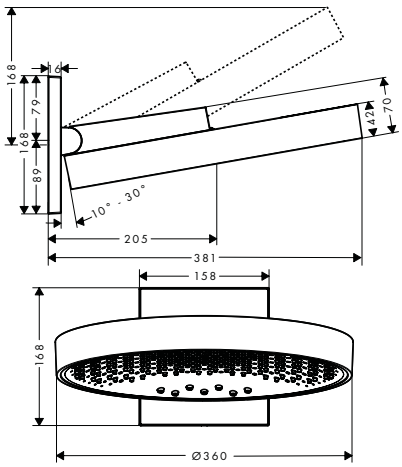

Rainfinity Overhead shower 360 3jet with wall connector

- consists of: overhead shower, wall connector
- shower head size: 360 mm
- spray type: PowderRain, Intense PowderRain, RainStream
- projection 381 mm
- middle spray disc: 205 mm
- frame: metal
- material spray disc: aluminium
- spray disc surface: graphite
- shower head vertically inclinable by 10-30°
- maximum flow rate at 3 bar: 28,1 l/min
- flow rate PowderRain spray (at 3 bar): 20 l/min
- flow rate Intense PowderRain (at 3 bar): 18 l/min
- flow rate RainStream spray (at 3 bar): 16 l/min
- minimum flow pressure: 1,7 bar
- the 3 spray zones must be controlled via 3 valves or a diverter valve with 3 outlets
- overhead shower removable for cleaning
- installation: wall-mounted - for installation on iBox
- connection dimension: DN15

finish	code no.	Euro
Chrome	26234000	1,181.40
Brushed Bronze	26234140	1,772.10
Brushed Black Chrome	26234340	1,772.10
Matt Black	26234670	1,535.80
Matt White	26234700	1,535.80
Polished Gold Optic	26234990	1,772.10

Quick Clean

XXL Performance

Alternative sizes:

· **Rainfinity** Overhead shower 250 3jet with wall connector	Chrome	26232000	1,073.10
	Matt White	26232700	1,394.90

Required parts:

· Basic set iBox universal		01800180	137.30

Measurements within scale drawings are in mm.

Technical specifications and units of measure are subject to change.

Raindance Rainmaker

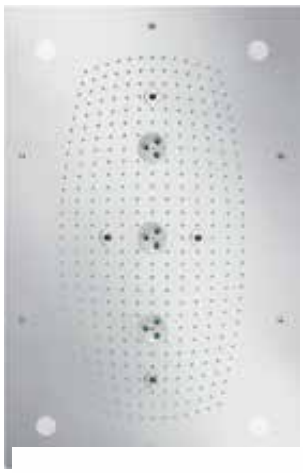

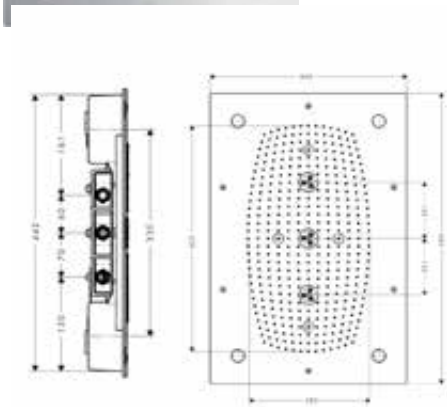

	finish	code no.	Euro
Raindance Rainmaker Overhead shower 680/460 3jet with lighting · shower head size: 680 x 460 mm · spray type: RainAir, Whirl, RainAir XL · material spray disc: metal · maximum flow rate at 3 bar: 28,1 l/min · flow rate RainAir spray (at 3 bar): 20 l/min · flow rate RainAir XL (at 3 bar): 28,1 l/min · flow rate WhirlAir spray (at 3 bar): 22 l/min · minimum flow pressure: 3 bar · the 3 spray zones must be controlled via 3 valves or a diverter valve with 3 outlets · installation: ceiling mointed · connection thread G ½ · connection dimension: DN20 · with integrated lighting · illuminant: LED · power supply: 12 V - DC · transformer power supply for concealed installation 12 V, 18 W · input voltage: 100 - 240 V AC / 50 / 60 Hz · output voltage: 12 V - DC · colour temperature: 2700 K · TÜV certified · not included: basic set	Chrome	28418000	5,177.00
Alternative products: · **Raindance Rainmaker** Overhead shower 680/460 3jet without lighting	Chrome	28417000	4,341.40
Required parts: · **Raindance Rainmaker** Basic set for overhead shower 680/460 3jet		28414180	135.50
Optional parts: · **ShowerSelect** Thermostat HighFlow for concealed installation for 1 function and additional outlet	Chrome	15761000	574.50
· **ShowerSelect** Valve for concealed installation for 3 functions	Chrome	15764000	415.00



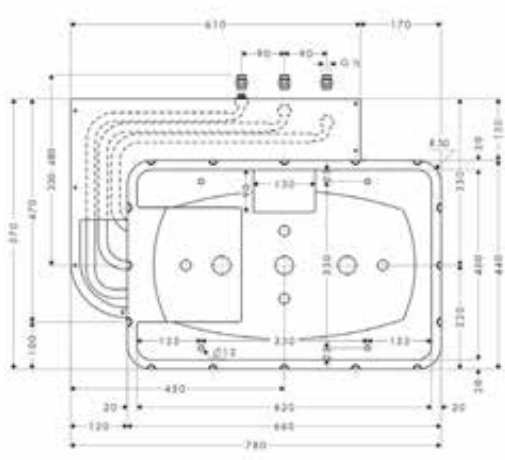

Raindance Rainmaker Basic set for overhead shower 680/460 3jet · connection dimension: G ½		28414180	135.50
Optional parts: · **Raindance Rainmaker** Overhead shower 680/460 3jet with lighting	Chrome	28418000	5,177.00
· **Raindance Rainmaker** Overhead shower 680/460 3jet without lighting	Chrome	28417000	4,341.40

Measurements within scale drawings are in mm.

Technical specifications and units of measure are subject to change.

	finish	code no.	Euro



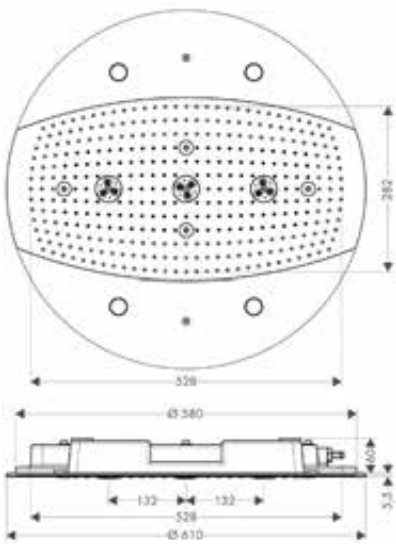

Raindance Rainmaker Overhead shower 600 3jet with lighting

	finish	code no.	Euro
	Chrome	26117000	5,177.70

AirPower · Quick Clean · XXL Performance

- shower head size: 600 mm
- spray type: RainAir, Whirl, RainAir XL
- material spray disc: metal
- maximum flow rate at 3 bar: 25 l/min
- flow rate RainAir spray (at 3 bar): 20,5 l/min
- flow rate RainAir XL (at 3 bar): 25 l/min
- flow rate WhirlAir spray (at 3 bar): 20,5 l/min
- minimum flow pressure: 3 bar
- the 3 spray zones must be controlled via 3 valves or a diverter valve with 3 outlets
- installation: ceiling mointed
- connection thread G ½
- connection dimension: DN20
- with integrated lighting
- illuminant: LED
- power supply: 12 V - DC
- transformer power supply for concealed installation 12 V, 18 W
- input voltage: 100 - 240 V AC / 50 / 60 Hz
- output voltage: 12 V - DC
- colour temperature: 2700 K
- TÜV certified
- not included: basic set

Alternative products:

· **Raindance Rainmaker** Overhead shower 600 3jet without lighting	Chrome	26115000	4,341.50

Required parts:

· **Raindance Rainmaker** Basic set for overhead shower 600 3jet		28412180	122.20

Optional parts:

· **ShowerSelect S** Valve for concealed installation for 3 functions	Chrome	15745000	415.00
· **ShowerSelect S** Thermostat HighFlow for concealed installation for 1 function and additional outlet	Chrome	15742000	574.50



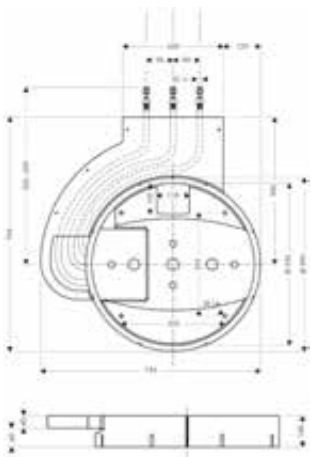

Raindance Rainmaker Basic set for overhead shower 600 3jet

		28412180	122.20

- connection dimension: G ½

Optional parts:

· **Raindance Rainmaker** Overhead shower 600 3jet with lighting	Chrome	26117000	5,177.70
· **Raindance Rainmaker** Overhead shower 600 3jet without lighting	Chrome	26115000	4,341.50

Measurements within scale drawings are in mm.

Technical specifications and units of measure are subject to change.

Raindance Rainfall

	finish	code no.	Euro



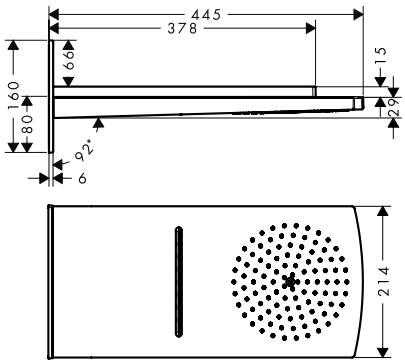

Raindance Rainfall Overhead shower 180 2jet

	finish	code no.	Euro
	Chrome	28433000	1,386.30
	White/Chrome	28433400	1,386.30

AirPower · Quick Clean · XXL Performance

- consists of: overhead shower, wall connector
- shower head size: 180 mm
- spray type: RainAir, wide flood jet
- material spray disc: metal
- spray disc surface in two variants: chrome or white
- maximum flow rate at 3 bar: 24 l/min
- flow rate RainAir spray (at 3 bar): 17 l/min
- flow rate RainFlow spray (at 3 bar): 24 l/min
- minimum flow pressure: 2 bar
- the 2 spray zones must be controlled via 2 valves or a diverter valve with 2 outlets
- installation: wall-mounted - for installation on iBox
- connection dimension: DN15
- not included: basic set

Required parts:

· Basic set iBox universal		01800180	137.30

Optional parts:

· **ShowerSelect** Thermostat HighFlow for concealed installation	Chrome	15760000	415.00
· **ShowerSelect** Valve for concealed installation for 3 functions	Chrome	15764000	415.00



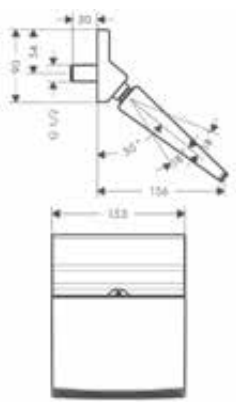

Raindance Rainfall Overhead shower 150 1jet stream

	finish	code no.	Euro
	Chrome	26443000	272.50

XXL Performance

- shower head size: 153 mm
- spray type: Stream
- ball-joint: overhead shower angle adjustable
- maximum flow rate at 3 bar: 18 l/min
- flow rate RainStream spray (at 3 bar): 18 l/min
- minimum flow pressure: 1,7 bar
- installation: wall
- connection thread G ½
- connection dimension: DN15

Optional parts:

· **ShowerSelect** Thermostat for concealed installation for 1 function	Chrome	15762000	574.50



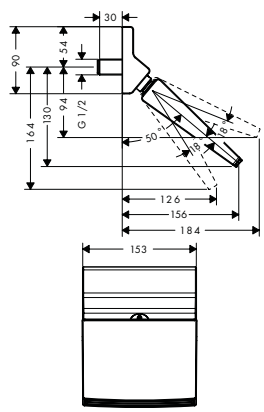

Raindance Rainfall Overhead shower 150 1jet

	finish	code no.	Euro
	Chrome	26442000	272.50

XXL Performance

- shower head size: 153 mm
- spray type: RainFlow
- ball-joint: overhead shower angle adjustable
- maximum flow rate at 3 bar: 18 l/min
- flow rate RainFlow spray (at 3 bar): 18 l/min
- minimum flow pressure: 1,7 bar
- installation: wall
- connection thread G ½
- connection dimension: DN15

Optional parts:

· **ShowerSelect** Thermostat for concealed installation for 1 function	Chrome	15762000	574.50

Measurements within scale drawings are in mm.

Raindance 260 x 260 mm overhead shower for concealed installation

	finish	code no.	Euro
Raindance Overhead shower 260/260 1jet	Chrome	26472000	439.30



- shower head size: 260 x 260 mm
- spray type: RainAir
- material spray disc: metal
- maximum flow rate at 3 bar: 15 l/min
- flow rate RainAir spray (at 3 bar): 15 l/min
- minimum flow pressure: 1,7 bar
- spray disc removable for cleaning
- installation: flush with the ceiling
- connection thread G ½
- connection dimension: DN15
- not included: basic set

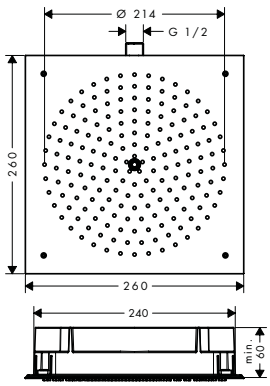

Water saving EcoSmart version:			
· **Raindance** Overhead shower 260/260 1jet EcoSmart 9 l/min	Chrome	26481000	439.30
Required parts:			
· **Raindance** Basic set for overhead shower 260/260 1jet		26471180	100.50
Optional parts:			
· **ShowerSelect** Thermostat for concealed installation for 2 functions	Chrome	15763000	625.60

Raindance Basic set for overhead shower 260/260 1jet		26471180	100.50

- connection dimension: G ½

Optional parts:			
· **Raindance** Overhead shower 260/260 1jet	Chrome	26472000	439.30
· **Raindance** Overhead shower 260/260 1jet EcoSmart 9 l/min	Chrome	26481000	439.30



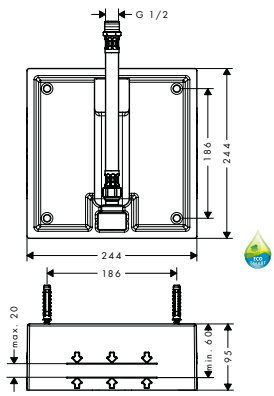

Raindance Select S

Raindance Select S Overhead shower 300 2jet with ceiling connector	Chrome White/Chrome	27337000 27337400	534.10 534.10



- consists of: overhead shower, ceiling connector
- shower head size: 301 mm
- spray type: Rain, RainAir
- Select button on overhead shower
- ball-joint: overhead shower angle adjustable
- material spray disc: metal
- spray disc surface in two variants: chrome or white
- brass ceilling connector
- ceiling connection length: 100 mm
- maximum flow rate at 3 bar: 17 l/min
- flow rate Rain spray (at 3 bar): 17 l/min
- flow rate RainAir spray (at 3 bar): 17 l/min
- minimum flow pressure: 1,5 bar
- spray disc removable for cleaning
- installation: ceiling
- connection thread G ½
- connection dimension: DN15

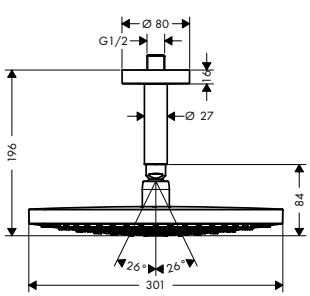

Measurements within scale drawings are in mm.

Technical specifications and units of measure are subject to change.

	finish	code no.	Euro
Raindance Select S Overhead shower 300 2jet with shower arm	Chrome	27378000	572.20
	White/Chrome	27378400	572.20



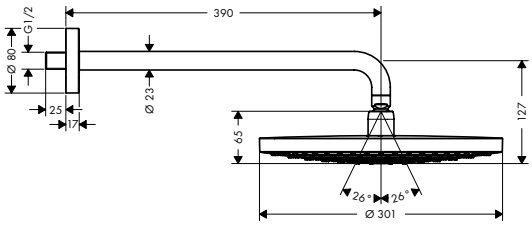

- consists of: overhead shower, shower arm
- shower head size: 301 mm
- spray type: RainAir, Rain
- Select button on overhead shower
- ball-joint: overhead shower angle adjustable
- material spray disc: metal
- spray disc surface in two variants: chrome or white
- shower arm length 390 mm
- maximum flow rate at 3 bar: 17 l/ min
- flow rate Rain spray (at 3 bar): 17 l/ min
- flow rate RainAir spray (at 3 bar): 17 l/ min
- minimum flow pressure: 1,5 bar
- spray disc removable for cleaning
- installation: wall
- connection thread G ½
- connection dimension: DN15

Raindance Select S Overhead shower 240 2jet with ceiling connector	Chrome	26467000	406.90
	White/Chrome	26467400	406.90



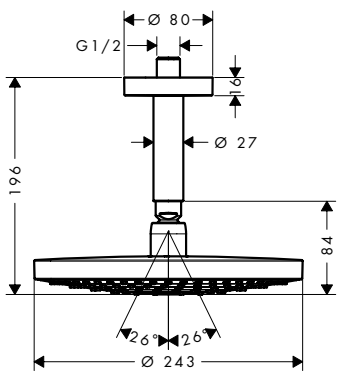

- consists of: overhead shower, ceiling connector
- shower head size: 243 mm
- spray type: RainAir, Rain
- Select button on overhead shower
- ball-joint: overhead shower angle adjustable
- material spray disc: metal
- spray disc surface in two variants: chrome or white
- brass ceilling connector
- ceiling connection length: 100 mm
- maximum flow rate at 3 bar: 17 l/ min
- flow rate Rain spray (at 3 bar): 17 l/ min
- flow rate RainAir spray (at 3 bar): 16 l/ min
- minimum flow pressure: 1 bar
- spray disc removable for cleaning
- installation: ceiling
- connection thread G ½
- connection dimension: DN15

Water saving EcoSmart version:

· **Raindance Select S** Overhead shower 240 2jet EcoSmart 9 l/ min with ceiling connector	Chrome	26469000	406.90

Measurements within scale drawings are in mm.

	finish	code no.	Euro



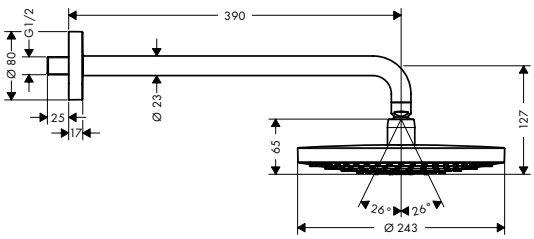

Raindance Select S Overhead shower 240 2jet with shower arm

- consists of: overhead shower, shower arm
- shower head size: 243 mm
- spray type: RainAir, Rain
- Select button on overhead shower
- ball-joint: overhead shower angle adjustable
- material spray disc: metal
- spray disc surface in two variants: chrome or white
- shower arm length 390 mm
- maximum flow rate at 3 bar: 17 l/ min
- flow rate Rain spray (at 3 bar): 17 l/ min
- flow rate RainAir spray (at 3 bar): 16 l/ min
- minimum flow pressure: 1 bar
- spray disc removable for cleaning
- installation: wall
- connection thread G ½
- connection dimension: DN15

Chrome	26466000	445.00
White/Chrome	26466400	445.00

Water saving EcoSmart version:

- **Raindance Select S** Overhead shower 240 2jet EcoSmart 9 l/ min with shower arm

Chrome	26470000	445.00
White/Chrome	26470400	445.00





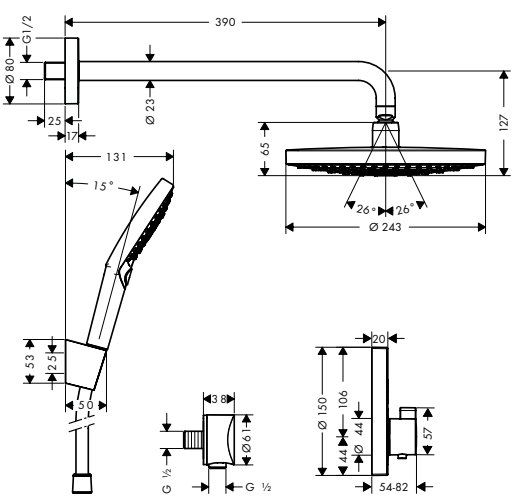

Raindance Select S Shower system for concealed installation with ShowerSelect S thermostat

- consists of: overhead shower, hand shower, shower thermostat, basic set, shower arm, shower holder, wall outlet, shower hose
- maximum flow rate at 3 bar: 17 l/ min

Chrome	27297000	1,212.30

Consisting of:

- **Raindance Select S** Overhead shower 240 2jet with shower arm (# 26466000)
- **Raindance Select S** Hand shower 120 3jet (# 26530000)
- **Isiflex** Shower hose 125 cm (# 28272000)
- Shower holder Porter S (# 28331000)
- **FixFit** Wall outlet S without non-return valve (# 27453000)
- **ShowerSelect S** Thermostat for concealed installation for 2 functions (# 15743000)
- Basic set iBox universal (# 01800180)

Measurements within scale drawings are in mm.

Technical specifications and units of measure are subject to change.

Raindance E



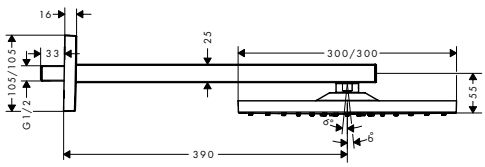

	finish	code no.	Euro
Raindance E Overhead shower 300 1jet with shower arm	Chrome	26238000	565.30
	Brushed Bronze	26238140	848.00
	Brushed Black Chrome	26238340	848.00
	Matt Black	26238670	791.60
	Matt White	26238700	791.60
	Polished Gold Optic	26238990	848.00

AirPower · Quick Clean · XXL Performance

- consists of: overhead shower, shower arm
- shower head size: 300 x 300 mm
- spray type: RainAir
- ball-joint: overhead shower angle adjustable
- material spray disc: metal
- shower arm length 390 mm
- maximum flow rate at 3 bar: 17 l/min
- flow rate RainAir spray (at 3 bar): 17 l/min
- minimum flow pressure: 1,6 bar
- spray disc removable for cleaning
- installation: wall
- connection thread G ½
- connection dimension: DN15

Water saving EcoSmart version:

· **Raindance E** Overhead shower 300 1jet EcoSmart 9 l/min with shower arm	Chrome	26239000	565.30

NEW





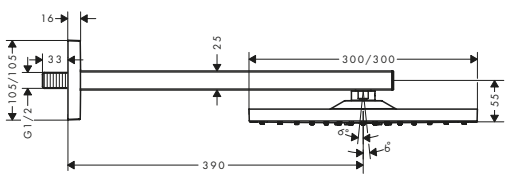

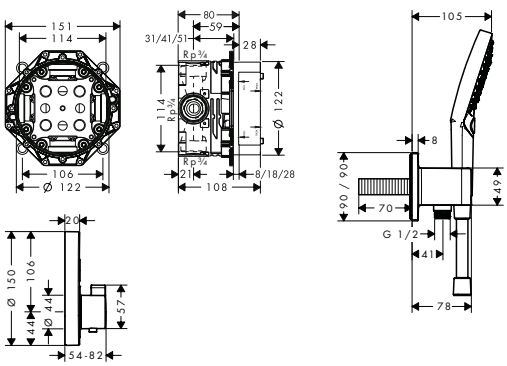

Raindance E Shower system 300 1jet with ShowerSelect Square

	Chrome	27952000	1,532.30

AirPower · XXL Performance

- consists of: overhead shower, hand shower, Thermostat, basic set, wall outlet, shower hose
- shower head size: 300 x 300 mm
- spray type overhead shower: RainAir
- spray type hand shower: PowderRain, Rain, Whirl
- maximum flow rate at 3 bar: 17,1 l/min
- minimum flow pressure: 1,5 bar
- pivot connector prevent hose from tangling

Consisting of:

- **Raindance E** Overhead shower 300 1jet with shower arm (# 26238000)
- **Raindance Select S** Hand shower 120 3jet PowderRain (# 26014000)
- **ShowerSelect** Thermostat for concealed installation for 2 functions (# 15763000)
- Basic set iBox universal (# 01800180)
- **FixFit** Wall outlet square with shower holder (# 26486000)
- **Isiflex** Shower hose 125 cm (# 28272000)

Measurements within scale drawings are in mm.

Technical specifications and units of measure are subject to change.

	finish	code no.	Euro

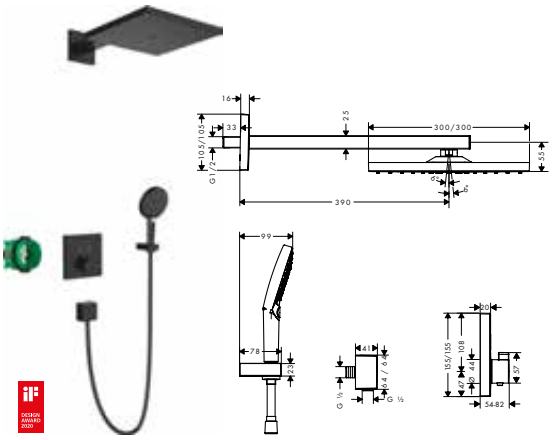

Raindance E Shower system for concealed installation with ShowerSelect thermostat

- consists of: overhead shower, hand shower, shower thermostat, shower arm, shower holder, wall outlet, shower hose, basic set

Matt Black	27939670	2,071.40

Consisting of:
- **Raindance E** Overhead shower 300 1jet with shower arm (# 26238670)
- **Raindance Select S** Hand shower 120 3jet (# 26530670)
- **ShowerSelect** Thermostat for concealed installation for 2 functions (# 15763670)
- Shower holder Porter E (# 28387670)
- **FixFit** Wall outlet Square with non-return valve (# 26455670)
- **Isiflex** Shower hose 125 cm (# 28272670)
- Basic set iBox universal (# 01800180)



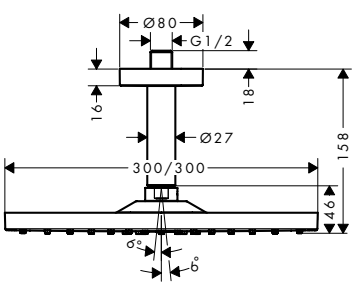

Raindance E Overhead shower 300 1jet with ceiling connector

- consists of: overhead shower, ceiling connector
- shower head size: 300 x 300 mm
- spray type: RainAir
- ball-joint: overhead shower angle adjustable
- material spray disc: metal
- brass ceilling connector
- ceiling connection length: 158 mm
- maximum flow rate at 3 bar: 17 l/min
- flow rate RainAir spray (at 3 bar): 17 l/min
- minimum flow pressure: 1,4 bar
- spray disc removable for cleaning
- installation: ceiling
- connection thread G ½
- connection dimension: DN15

Chrome	26250000	531.10
Brushed Bronze	26250140	796.70
Brushed Black Chrome	26250340	796.70
Matt Black	26250670	743.70
Matt White	26250700	743.70
Polished Gold Optic	26250990	796.70

AirPower · Quick Clean · XXL Performance

Water saving EcoSmart version:
- **Raindance E** Overhead shower 300 1jet EcoSmart 9 l/min with ceiling connector

Chrome	26251000	531.10



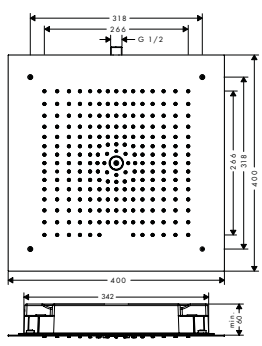

Raindance E Overhead shower 400/400 1jet

- shower head size: 400 x 400 mm
- spray type: RainAir
- material spray disc: metal
- maximum flow rate at 3 bar: 20 l/min
- flow rate RainAir spray (at 3 bar): 20 l/min
- minimum flow pressure: 1,2 bar
- spray disc removable for cleaning
- installation: flush with the ceiling
- connection thread G ½
- connection dimension: DN15
- not included: basic set

Chrome	26252000	856.60

AirPower · Quick Clean · XXL Performance

Water saving EcoSmart version:
- **Raindance E** Overhead shower 400/400 1jet EcoSmart 9 l/min

Chrome	26253000	856.60

Required parts:
- **Raindance E** Basic set for overhead shower 400/400 1jet

	26254180	125.60

Measurements within scale drawings are in mm.

Technical specifications and units of measure are subject to change.

	finish	code no.	Euro
 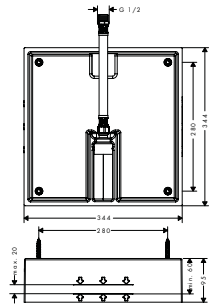 **Raindance E** Basic set for overhead shower 400/400 1jet		26254180	125.60
Optional parts:			
· **Raindance E** Overhead shower 400/400 1jet	Chrome	26252000	856.60
· **Raindance E** Overhead shower 400/400 1jet EcoSmart 9 l/min	Chrome	26253000	856.60
 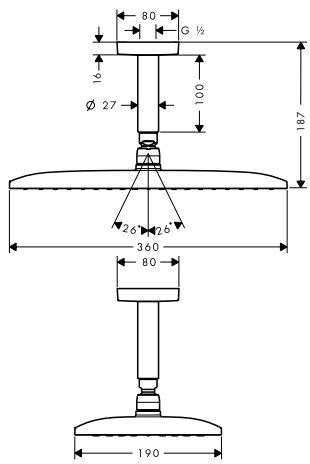 **Raindance E** Overhead shower 360 1jet with ceiling connector · consists of: overhead shower, ceiling connector · shower head size: 360 x 190 mm · spray type: RainAir · ball-joint: overhead shower angle adjustable · material spray disc: metal · brass ceilling connector · ceiling connection length: 100 mm · maximum flow rate at 3 bar: 16,5 l/min · flow rate RainAir spray (at 3 bar): 16,5 l/min · minimum flow pressure: 1,3 bar · spray disc removable for cleaning · installation: ceiling · connection thread G ½ · connection dimension: DN15	Chrome	27381000	629.00
Water saving EcoSmart version:			
· **Raindance E** Overhead shower 360 1jet EcoSmart 9 l/min with ceiling connector	Chrome	26604000	629.00
 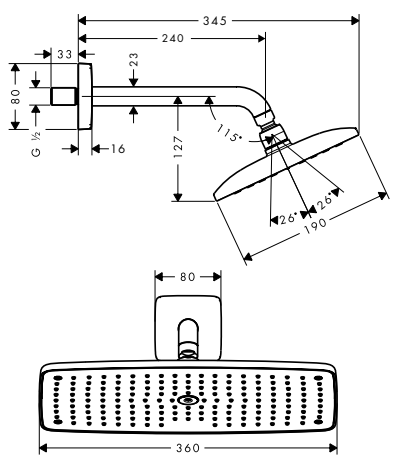 **Raindance E** Overhead shower 360 1jet with shower arm 24 cm · consists of: overhead shower, shower arm · shower head size: 360 x 190 mm · spray type: RainAir · ball-joint: overhead shower angle adjustable · material spray disc: metal · shower arm length 240 mm · maximum flow rate at 3 bar: 16,5 l/min · flow rate RainAir spray (at 3 bar): 16,5 l/min · minimum flow pressure: 1,3 bar · spray disc removable for cleaning · installation: wall · connection thread G ½ · connection dimension: DN15	Chrome	27371000	669.60

Measurements within scale drawings are in mm.

Technical specifications and units of measure are subject to change.

Overhead showers

	finish	code no.	Euro



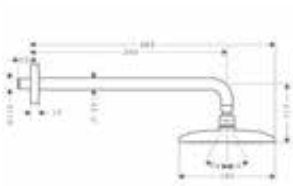

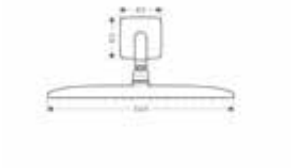

Raindance E Overhead shower 360 1jet with shower arm 39 cm

- consists of: overhead shower, shower arm
- shower head size: 360 x 190 mm
- spray type: RainAir
- ball-joint: overhead shower angle adjustable
- material spray disc: metal
- shower arm length 390 mm
- maximum flow rate at 3 bar: 16,5 l/min
- flow rate RainAir spray (at 3 bar): 16,5 l/min
- minimum flow pressure: 1,3 bar
- spray disc removable for cleaning
- installation: wall
- connection thread G ½
- connection dimension: DN15

Chrome — 27376000 — 665.20

AirPower · Quick Clean · XXL Performance

Water saving EcoSmart version:

- **Raindance E** Overhead shower 360 1jet EcoSmart 9 l/min with shower arm

Chrome — 26605000 — 665.20



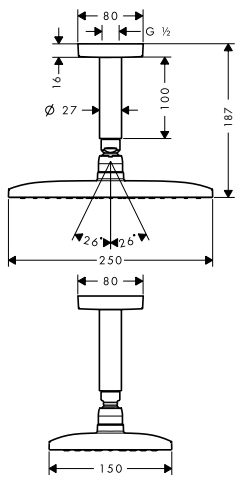

Raindance E Overhead shower 240 1jet with ceiling connector

- consists of: overhead shower, ceiling connector
- shower head size: 250 x 150 mm
- spray type: RainAir
- ball-joint: overhead shower angle adjustable
- material spray disc: metal
- brass ceilling connector
- ceiling connection length: 100 mm
- maximum flow rate at 3 bar: 19,5 l/min
- flow rate RainAir spray (at 3 bar): 19,5 l/min
- minimum flow pressure: 1 bar
- spray disc removable for cleaning
- installation: ceiling
- connection thread G ½
- connection dimension: DN15

Chrome — 27380000 — 512.90

AirPower · Quick Clean · XXL Performance



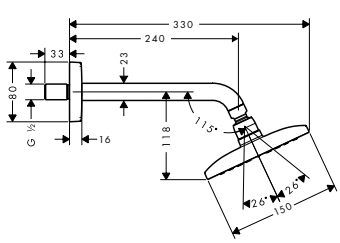

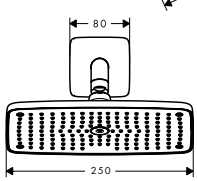

Raindance E Overhead shower 240 1jet with shower arm

- consists of: overhead shower, shower arm
- shower head size: 250 x 150 mm
- spray type: RainAir
- ball-joint: overhead shower angle adjustable
- material spray disc: metal
- shower arm length 240 mm
- maximum flow rate at 3 bar: 17,6 l/min
- flow rate RainAir spray (at 3 bar): 17,6 l/min
- minimum flow pressure: 1,1 bar
- spray disc removable for cleaning
- installation: wall
- connection thread G ½
- connection dimension: DN15

Chrome — 27370000 — 553.60

AirPower · Quick Clean · XXL Performance

Water saving EcoSmart version:

- **Raindance E** Overhead shower 240 1jet EcoSmart 9 l/min with shower arm

Chrome — 27375000 — 558.50

Measurements within scale drawings are in mm.

Technical specifications and units of measure are subject to change.

Raindance S

	finish	code no.	Euro



Raindance S Overhead shower 300 1jet with shower arm 46 cm

Chrome | 27492000 | 739.10

AirPower · Quick Clean · XXL Performance

- consists of: overhead shower, shower arm
- shower head size: 300 mm
- spray type: RainAir
- ball-joint: overhead shower angle adjustable
- material spray disc: metal
- shower arm length 460 mm
- maximum flow rate at 3 bar: 18 l/ min
- flow rate RainAir spray (at 3 bar): 18 l/ min
- minimum flow pressure: 1,5 bar
- spray disc removable for cleaning
- installation: wall
- connection thread G ½
- connection dimension: DN15



Raindance S Overhead shower 300 1jet with shower arm 39 cm

Chrome | 27493000 | 714.10

AirPower · Quick Clean · XXL Performance

- consists of: overhead shower, shower arm
- shower head size: 300 mm
- spray type: RainAir
- ball-joint: overhead shower angle adjustable
- material spray disc: metal
- shower arm length 390 mm
- maximum flow rate at 3 bar: 18 l/ min
- flow rate RainAir spray (at 3 bar): 18 l/ min
- minimum flow pressure: 1,5 bar
- spray disc removable for cleaning
- installation: wall
- connection thread G ½
- connection dimension: DN15

Water saving EcoSmart version:

- **Raindance S** Overhead shower 300 1jet EcoSmart 9 l/ min with shower arm

Chrome | 26601000 | 714.10



Raindance S Overhead shower 300 1jet with ceiling connector

Chrome | 27494000 | 674.80

AirPower · Quick Clean · XXL Performance

- consists of: overhead shower, ceiling connector
- shower head size: 300 mm
- spray type: RainAir
- ball-joint: overhead shower angle adjustable
- material spray disc: metal
- ceiling connection length: 100 mm
- maximum flow rate at 3 bar: 20 l/ min
- flow rate RainAir spray (at 3 bar): 20 l/ min
- minimum flow pressure: 1,5 bar
- spray disc removable for cleaning
- installation: ceiling
- connection thread G ½
- connection dimension: DN15

Water saving EcoSmart version:

- **Raindance S** Overhead shower 300 1jet EcoSmart 9 l/ min with ceiling connector

Chrome | 26600000 | 674.80

Measurements within scale drawings are in mm.

Technical specifications and units of measure are subject to change.

	finish	code no.	Euro



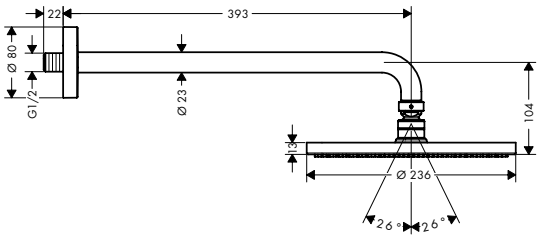

Raindance S Overhead shower 240 1jet PowderRain with shower arm

Chrome	27607000	427.40

Quick Clean · XXL Performance

- consists of: overhead shower, shower arm
- shower head size: 240 mm
- spray type: PowderRain
- ball-joint: overhead shower angle adjustable
- material spray disc: metal
- shower arm length 390 mm
- maximum flow rate at 3 bar: 18,1 l/min
- flow rate PowderRain spray (at 3 bar): 18,1 l/min
- minimum flow pressure: 1,6 bar
- spray disc removable for cleaning
- installation: wall
- connection thread G ½
- connection dimension: DN15

Alternative products:

· **Raindance S** Overhead shower 240 1jet PowderRain with ceiling connector	Chrome	27620000	394.40
· **Raindance S** Overhead shower 240 1jet PowderRain	Chrome	27623000	361.50
	Matt Black	27623670	508.20
	Matt White	27623700	508.20

NEW



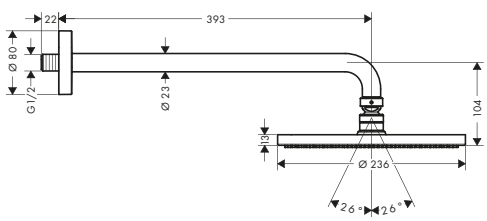

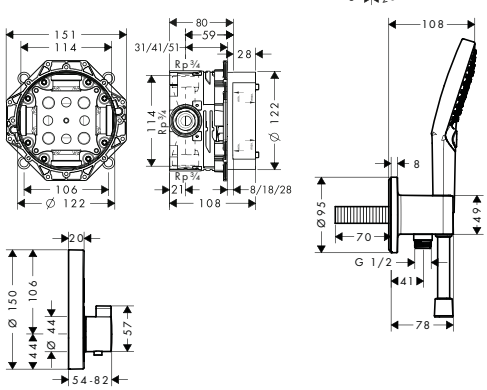

Raindance S Shower system 240 1 jet PowderRain with ShowerSelect S

Chrome	27951000	1,394.40

XXL Performance

- consists of: overhead shower, hand shower, shower thermostat, basic set, wall outlet, shower hose
- shower head size: 240 mm
- spray type overhead shower: PowderRain
- spray type hand shower: PowderRain, Rain, Whirl
- maximum flow rate at 3 bar: 18,1 l/min
- minimum flow pressure: 1 bar
- pivot connector prevent hose from tangling

Consisting of:

- **Raindance S** Overhead shower 240 1jet PowderRain with shower arm (# 27607000)
- **Raindance Select S** Hand shower 120 3jet PowderRain (# 26014000)
- **ShowerSelect S** Thermostat for concealed installation for 2 functions (# 15743000)
- Basic set iBox universal (# 01800180)
- **FixFit** Wall outlet S with shower holder (# 26487000)
- **Isiflex** Shower hose 125 cm (# 28272000)

Measurements within scale drawings are in mm.

Technical specifications and units of measure are subject to change.



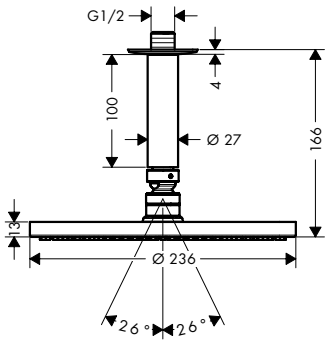

	finish	code no.	Euro
Raindance S Overhead shower 240 1jet PowderRain with ceiling connector	Chrome	27620000	394.40

Quick Clean · XXL Performance

- consists of: overhead shower, ceiling connector
- shower head size: 240 mm
- spray type: PowderRain
- ball-joint: overhead shower angle adjustable
- material spray disc: metal
- ceiling connection length: 100 mm
- maximum flow rate at 3 bar: 18 l/min
- flow rate PowderRain spray (at 3 bar): 18 l/min
- minimum flow pressure: 1 bar
- spray disc removable for cleaning
- installation: ceiling
- connection thread G ½
- connection dimension: DN15

Alternative products:

· **Raindance S** Overhead shower 240 1jet PowderRain with shower arm	Chrome	27607000	427.40
· **Raindance S** Overhead shower 240 1jet PowderRain	Chrome	27623000	361.50
	Matt Black	27623670	508.20
	Matt White	27623700	508.20



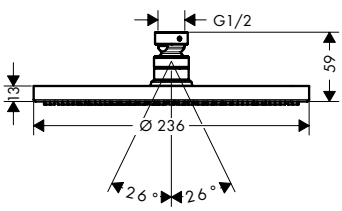

Raindance S Overhead shower 240 1jet PowderRain	Chrome	27623000	361.50
	Matt Black	27623670	508.20
	Matt White	27623700	508.20

Quick Clean · XXL Performance

- shower head size: 240 mm
- spray type: PowderRain
- ball-joint: overhead shower angle adjustable
- material spray disc: metal
- maximum flow rate at 3 bar: 18 l/min
- flow rate PowderRain spray (at 3 bar): 18 l/min
- minimum flow pressure: 1 bar
- spray disc removable for cleaning
- installation: ceiling or wall
- connection thread G ½
- connection dimension: DN15

Alternative products:

· **Raindance S** Overhead shower 240 1jet PowderRain with shower arm	Chrome	27607000	427.40
· **Raindance S** Overhead shower 240 1jet PowderRain with ceiling connector	Chrome	27620000	394.40

Optional parts:

· Shower arm 38.9 cm	Chrome	27413000	87.30
	Matt Black	27413670	122.20
	Matt White	27413700	122.20
· Ceiling connector 10 cm	Chrome	27479000	58.90
	Matt Black	27479670	82.40
	Matt White	27479700	82.40

Measurements within scale drawings are in mm.

Technical specifications and units of measure are subject to change.

	finish	code no.	Euro

NEW





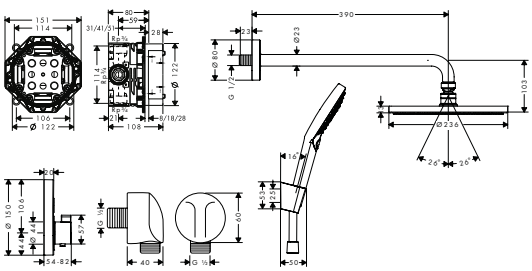

Raindance S Shower system 240 1 jet PowderRain with ShowerSelect S

Matt Black | 27959670 | 1,877.90

XXL Performance

- consists of: overhead shower, hand shower, Thermostat, basic set, wall outlet, shower holder, shower hose
- shower head size: 240 mm
- spray type overhead shower: PowderRain
- spray type hand shower: Rain, RainAir, Whirl
- minimum flow pressure: 1 bar
- pivot connector prevent hose from tangling

Consisting of:

- **Raindance S** Overhead shower 240 1jet PowderRain (# 27623670)
- Shower arm 38.9 cm (# 27413670)
- **Raindance Select S** Hand shower 120 3jet (# 26530670)
- **ShowerSelect S** Thermostat for concealed installation for 2 functions (# 15743670)
- Basic set iBox universal (# 01800180)
- Shower holder Porter S (# 28331670)
- **FixFit** Wall outlet E without non-return valve (# 27454670)
- **Isiflex** Shower hose 125 cm (# 28272670)



Raindance S Overhead shower 240 1jet with shower arm

Chrome | 27474000 | 595.70

AirPower | Quick Clean | XXL Performance

- consists of: overhead shower, shower arm
- shower head size: 240 mm
- spray type: RainAir
- ball-joint: overhead shower angle adjustable
- material spray disc: metal
- shower arm length 390 mm
- maximum flow rate at 3 bar: 18 l/min
- flow rate RainAir spray (at 3 bar): 18 l/min
- minimum flow pressure: 1 bar
- spray disc removable for cleaning
- installation: wall
- connection thread G ½
- connection dimension: DN15

Consisting of:

- Shower arm 38.9 cm (# 27413000)

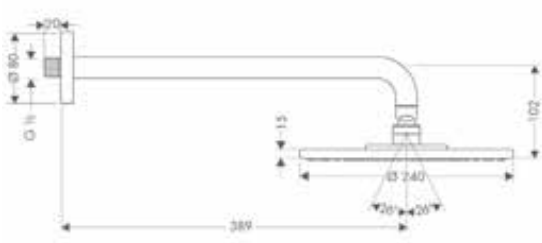

Water saving EcoSmart version:

- **Raindance S** Overhead shower 240 1jet EcoSmart 9 l/min with shower arm — Chrome | 27461000 | 600.80

Measurements within scale drawings are in mm.

Technical specifications and units of measure are subject to change.

	finish	code no.	Euro



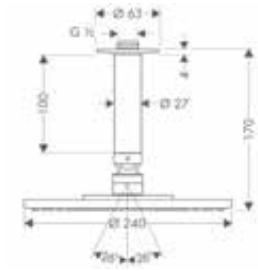

Raindance S Overhead shower 240 1jet with ceiling connector

Chrome 27477000 553.30

AirPower · Quick Clean · XXL Performance

- consists of: overhead shower, ceiling connector
- shower head size: 240 mm
- spray type: RainAir
- ball-joint: overhead shower angle adjustable
- material spray disc: metal
- ceiling connection length: 100 mm
- maximum flow rate at 3 bar: 18 l/min
- flow rate RainAir spray (at 3 bar): 18 l/min
- minimum flow pressure: 1 bar
- installation: ceiling
- connection thread G ½
- connection dimension: DN15

Water saving EcoSmart version:

- **Raindance S** Overhead shower 240 1jet EcoSmart 9 l/min with ceiling connector — Chrome 27463000 558.20



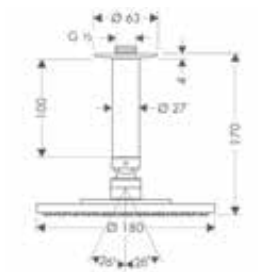

Raindance S Overhead shower 180 1jet with ceiling connector

Chrome 27478000 417.20

AirPower · Quick Clean · XXL Performance

- consists of: overhead shower, ceiling connector
- shower head size: 180 mm
- spray type: RainAir
- ball-joint: overhead shower angle adjustable
- material spray disc: metal
- ceiling connection length: 100 mm
- maximum flow rate at 3 bar: 18 l/min
- flow rate RainAir spray (at 3 bar): 18 l/min
- minimum flow pressure: 1,2 bar
- installation: ceiling
- connection thread G ½
- connection dimension: DN15

Raindance Classic



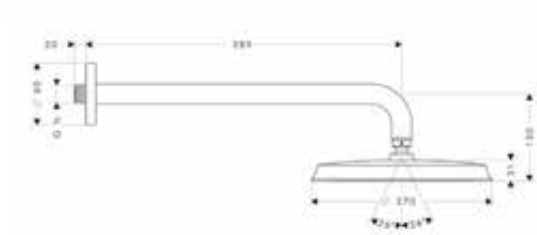

Raindance Classic Overhead shower 240 1jet with shower arm

Chrome 27424000 698.80
Chrome/Gold Optic 27424090 873.40

AirPower · Quick Clean · XXL Performance

- consists of: overhead shower, shower arm
- shower head size: 270 mm
- spray type: RainAir
- ball-joint: overhead shower angle adjustable
- material spray disc: metal
- shower arm length 390 mm
- maximum flow rate at 3 bar: 19 l/min
- flow rate RainAir spray (at 3 bar): 19 l/min
- minimum flow pressure: 1 bar
- spray disc removable for cleaning
- installation: wall
- connection thread G ½
- connection dimension: DN15

Measurements within scale drawings are in mm.

Technical specifications and units of measure are subject to change.

	finish	code no.	Euro
Raindance Classic Overhead shower 240 1jet with ceiling connector	Chrome	27405000	657.00
	Chrome/Gold Optic	27405090	821.20

AirPower · Quick Clean · XXL Performance



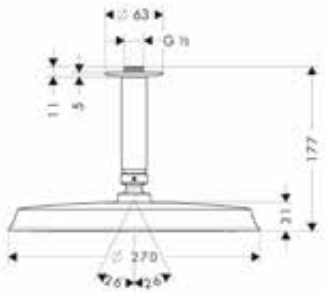

- consists of: overhead shower, ceiling connector
- shower head size: 270 mm
- spray type: RainAir
- ball-joint: overhead shower angle adjustable
- material spray disc: metal
- ceiling connection length: 100 mm
- maximum flow rate at 3 bar: 19 l/min
- flow rate RainAir spray (at 3 bar): 19 l/min
- minimum flow pressure: 1 bar
- spray disc removable for cleaning
- installation: ceiling
- connection thread G ½
- connection dimension: DN15

Pulsify S

NEW



Pulsify S Overhead shower 260 2jet with wall connector	Chrome	24150000	470.00
	Matt Black	24150670	611.00
	Matt White	24150700	611.00

Fast Drain · Adjustable Shower Head · Quick Clean · XXL Performance

available from January 2023

- consists of: overhead shower, wall connector
- shower head size: 260 mm
- spray type: PowderRain, Intense PowderRain
- Fast Drain empties the overhead shower from an angle of 10°
- ball-joint: overhead shower angle adjustable
- material spray disc: plastic
- spray disc surface: graphite
- maximum flow rate at 3 bar: 11,3 l/min
- flow rate PowderRain spray (at 3 bar): 11,3 l/min
- flow rate Intense PowderRain (at 3 bar): 7,2 l/min
- minimum flow pressure: 1,4 bar
- overhead shower removable for cleaning
- not included: basic set

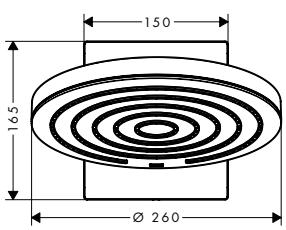

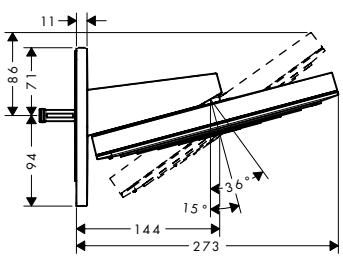

NEW

Water saving EcoSmart version:			
Pulsify S Overhead shower 260 2jet EcoSmart with wall connector	Chrome	24151000	470.00
	Matt Black	24151670	611.00
	Matt White	24151700	611.00
Required parts:			
Basic set iBox universal		01800180	137.30

Measurements within scale drawings are in mm.

Technical specifications and units of measure are subject to change.

	finish	code no.	Euro

NEW



Pulsify S Overhead shower 260 1jet

- shower head size: 260 mm
- spray type: PowderRain
- Fast Drain empties the overhead shower from an angle of 10°
- ball-joint: overhead shower angle adjustable
- material spray disc: plastic
- spray disc surface: graphite
- maximum flow rate at 3 bar: 12,3 l/min
- flow rate PowderRain spray (at 3 bar): 12,3 l/min
- minimum flow pressure: 1 bar
- installation: ceiling or wall
- connection thread G ½
- connection dimension: DN15

Fast Drain · Adjustable Shower Head · Quick Clean · XXL Performance

available from January 2023

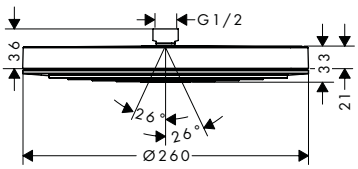

Alternative sizes:

NEW
- **Pulsify S** Overhead shower 105 1jet

Chrome	24130000	85.00
Matt Black	24130670	110.50
Matt White	24130700	110.50

Water saving EcoSmart version:

NEW
- **Pulsify S** Overhead shower 260 1jet EcoSmart

Chrome	24141000	250.00
Matt Black	24141670	325.00
Matt White	24141700	325.00

Optional parts:

NEW
- **Pulsify** Wall connector for overhead shower 260

Chrome	24149000	80.00
Matt Black	24149670	104.00
Matt White	24149700	104.00

NEW



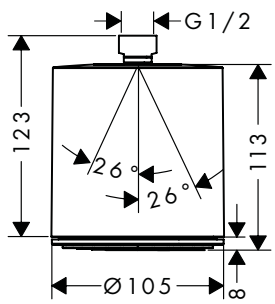

Pulsify S Overhead shower 105 1jet

- shower head size: 105 mm
- spray type: PowderRain
- ball-joint: overhead shower angle adjustable
- material spray disc: plastic
- spray disc surface: graphite
- maximum flow rate at 3 bar: 11,7 l/min
- flow rate PowderRain spray (at 3 bar): 11,7 l/min
- connection thread G ½
- connection dimension: DN15

Adjustable Shower Head · Quick Clean · XXL Performance

Chrome	24130000	85.00
Matt Black	24130670	110.50
Matt White	24130700	110.50

Alternative sizes:

NEW
- **Pulsify S** Overhead shower 260 1jet

Chrome	24140000	250.00
Matt Black	24140670	325.00
Matt White	24140700	325.00

Water saving EcoSmart version:

NEW
- **Pulsify S** Overhead shower 105 1jet Green

Chrome	24132000	85.00
Matt Black	24132670	110.50
Matt White	24132700	110.50

Optional parts:

NEW
- **Pulsify** Wall connector for overhead shower 105

Chrome	24139000	50.00
Matt Black	24139670	65.00
Matt White	24139700	65.00

Measurements within scale drawings are in mm.

Technical specifications and units of measure are subject to change.

Croma Select E



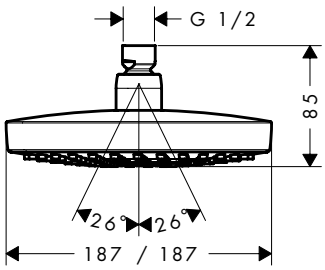

	finish	code no.	Euro
Croma Select E Overhead shower 180 2jet	Chrome	26524000	251.20
	White/Chrome	26524400	251.20

Select · Quick Clean · XXL Performance

- shower head size: 187 x 187 mm
- spray type: Rain, IntenseRain
- Select button on overhead shower
- ball-joint: overhead shower angle adjustable
- material spray disc: plastic
- maximum flow rate at 3 bar: 17 l/min
- flow rate Rain spray (at 3 bar): 17 l/min
- flow rate IntenseRain spray (at 3 bar): 16 l/min
- minimum flow pressure: 1 bar
- spray disc removable for cleaning
- installation: ceiling or wall
- connection thread G ½
- connection dimension: DN15

Water saving EcoSmart version:

· **Croma Select E** Overhead shower 180 2jet EcoSmart 9 l/min	Chrome	26528000	251.20
	White/Chrome	26528400	251.20

Optional parts:

· Shower arm E 38.9 cm	Chrome	27446000	87.30
· Ceiling connector E 10 cm	Chrome	27467000	58.90





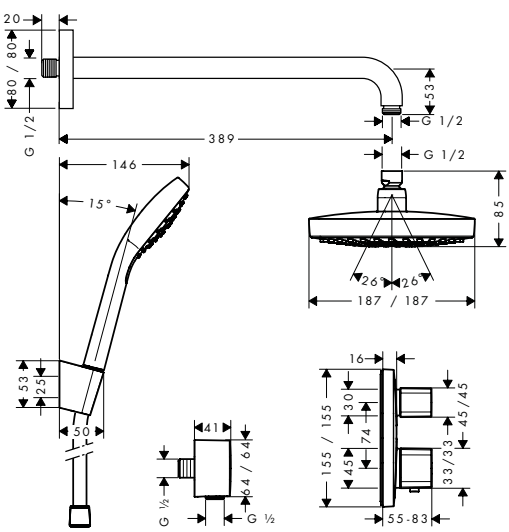

Croma Select E Shower system for concealed installation with Ecostat E thermostat	Chrome	27294000	857.00

- consists of: overhead shower, hand shower, shower thermostat, basic set, shower arm, shower holder, wall outlet, shower hose
- maximum flow rate at 3 bar: 17 l/min

Consisting of:

- **Croma Select E** Overhead shower 180 2jet (# 26524000)
- **Croma E** Hand shower 1jet (# 26814400)
- Shower arm E 38.9 cm (# 27446000)
- **Isiflex** Shower hose 125 cm (# 28272000)
- Shower holder Porter S (# 28331000)
- **FixFit** Wall outlet with non-return valve (# 26457000)
- **Ecostat E** Thermostat for concealed installation for 2 functions (# 15708000)
- Basic set iBox universal (# 01800180)

Measurements within scale drawings are in mm.

Technical specifications and units of measure are subject to change.

Croma Select S

	finish	code no.	Euro



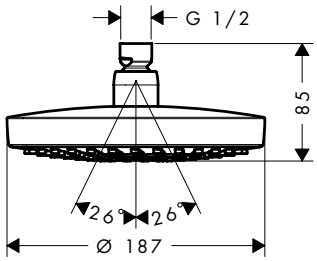

Croma Select S Overhead shower 180 2jet

Chrome 26522000 251.20
White/Chrome 26522400 251.20

Select · Quick Clean · XXL Performance

- shower head size: 187 mm
- spray type: Rain, IntenseRain
- Select button on overhead shower
- ball-joint: overhead shower angle adjustable
- material spray disc: plastic
- maximum flow rate at 3 bar: 17 l/ min
- flow rate Rain spray (at 3 bar): 17 l/ min
- flow rate IntenseRain spray (at 3 bar): 16 l/ min
- minimum flow pressure: 1 bar
- spray disc removable for cleaning
- installation: ceiling or wall
- connection thread G ½
- connection dimension: DN15

Water saving EcoSmart version:

- **Croma Select S** Overhead shower 180 2jet EcoSmart 9 l/ min — Chrome 26523000 251.20

Optional parts:

- Shower arm 38.9 cm — Chrome 27413000 87.30
- Ceiling connector 10 cm — Chrome 27479000 58.90



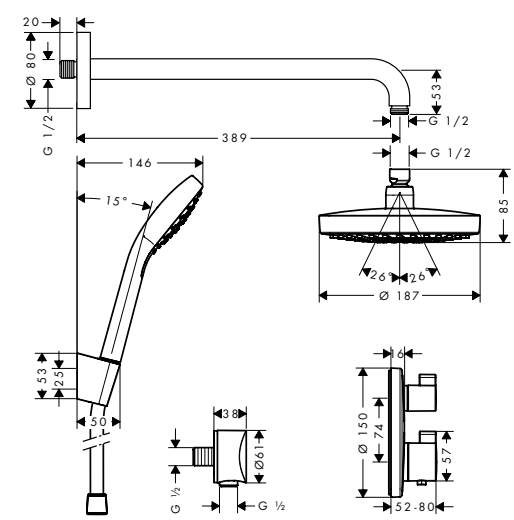

Croma Select S Shower system for concealed installation with Ecostat S thermostat

Chrome 27295000 857.00

- consists of: overhead shower, hand shower, shower thermostat, basic set, shower arm, shower holder, wall outlet, shower hose
- maximum flow rate at 3 bar: 17 l/ min

Consisting of:

- **Croma Select S** Overhead shower 180 2jet (# 26522000)
- Shower arm 38.9 cm (# 27413000)
- **Croma S** Hand shower 1jet (# 26804400)
- **Isiflex** Shower hose 125 cm (# 28272000)
- Shower holder Porter S (# 28331000)
- **FixFit** Wall outlet S without non-return valve (# 27453000)
- **Ecostat S** Thermostat for concealed installation for 2 functions (# 15758000)
- Basic set iBox universal (# 01800180)

Measurements within scale drawings are in mm.

Technical specifications and units of measure are subject to change.

Croma E

	finish	code no.	Euro



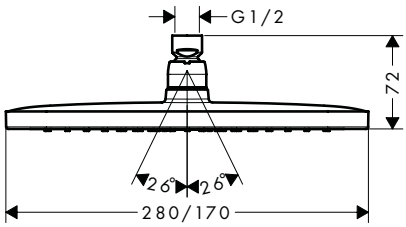

Croma E Overhead shower 280 1jet — Chrome — 26257000 — 337.10

AirPower · Quick Clean · XXL Performance

- shower head size: 280 x 170 mm
- spray type: RainAir
- ball-joint: overhead shower angle adjustable
- material spray disc: metal
- maximum flow rate at 3 bar: 18,3 l/min
- minimum flow pressure: 1,1 bar
- spray disc removable for cleaning
- installation: ceiling or wall
- connection thread G ½
- connection dimension: DN15

Water saving EcoSmart version:

- **Croma E** Overhead shower 280 1jet EcoSmart — Chrome — 26258000 — 337.10

Optional parts:

- Ceiling connector E 30 cm — Chrome — 27388000 — 84.10
- Ceiling connector E 10 cm — Chrome — 27467000 — 58.90
- Shower arm E 38.9 cm — Chrome — 27446000 — 87.30

NEW





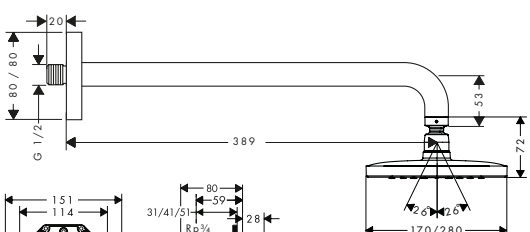

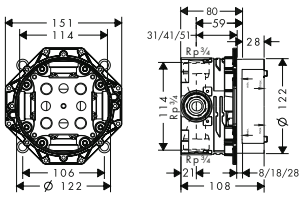

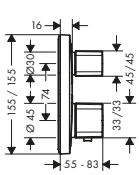

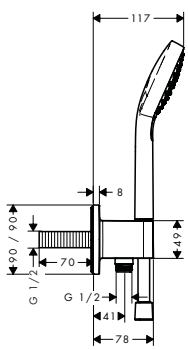

Croma E Shower system 280 1jet with Ecostat E — Chrome — 27953000 — 1,175.90

AirPower · XXL Performance

- consists of: overhead shower, hand shower, shower arm, Thermostat, basic set, wall outlet, shower hose
- shower head size: 280 x 170 mm
- spray type overhead shower: RainAir
- spray type hand shower: Rain, IntenseRain, TurboRain
- maximum flow rate at 3 bar: 18,3 l/min
- minimum flow pressure: 1 bar
- pivot connector prevent hose from tangling

Consisting of:

- **Croma E** Overhead shower 280 1jet (# 26257000)
- Shower arm E 38.9 cm (# 27446000)
- **Croma Select E** Hand shower Vario (# 26812400)
- **Ecostat E** Thermostat for concealed installation for 2 functions (# 15708000)
- Basic set iBox universal (# 01800180)
- **FixFit** Wall outlet E with shower holder (# 26485000)
- **Isiflex** Shower hose 125 cm (# 28272000)

Measurements within scale drawings are in mm.

Technical specifications and units of measure are subject to change.

Croma



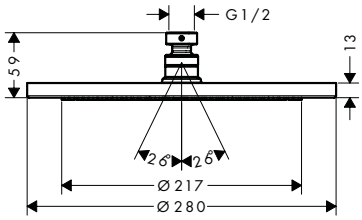

Croma Overhead shower 280 1jet

- shower head size: 280 mm
- spray type: RainAir
- ball-joint: overhead shower angle adjustable
- material spray disc: metal
- maximum flow rate at 3 bar: 15,6 l/min
- flow rate RainAir spray (at 3 bar): 15,6 l/min
- minimum flow pressure: 1,5 bar
- spray disc removable for cleaning
- installation: ceiling or wall
- connection thread G ½
- connection dimension: DN15

finish	code no.	Euro
Chrome	26220000	337.50
Brushed Bronze	26220140	506.20
Brushed Black Chrome	26220340	506.20
Matt Black	26220670	472.50
Matt White	26220700	472.50
Polished Gold Optic	26220990	506.20

AirPower · Quick Clean · XXL Performance

Water saving EcoSmart version:

- **Croma** Overhead shower 280 1jet EcoSmart 9 l/min

Chrome	26221000	339.60
Brushed Bronze	26221140	509.40
Brushed Black Chrome	26221340	509.40
Matt Black	26221670	475.50
Matt White	26221700	475.50
Polished Gold Optic	26221990	509.40

Optional parts:

- Shower arm 38.9 cm

Chrome	27413000	87.30
Brushed Bronze	27413140	130.90
Brushed Black Chrome	27413340	130.90
Matt Black	27413670	122.20
Matt White	27413700	122.20
Polished Gold Optic	27413990	130.90

- Ceiling connector 10 cm

Chrome	27479000	58.90
Brushed Bronze	27479140	88.30
Brushed Black Chrome	27479340	88.30
Matt Black	27479670	82.40
Matt White	27479700	82.40
Polished Gold Optic	27479990	88.30

NEW





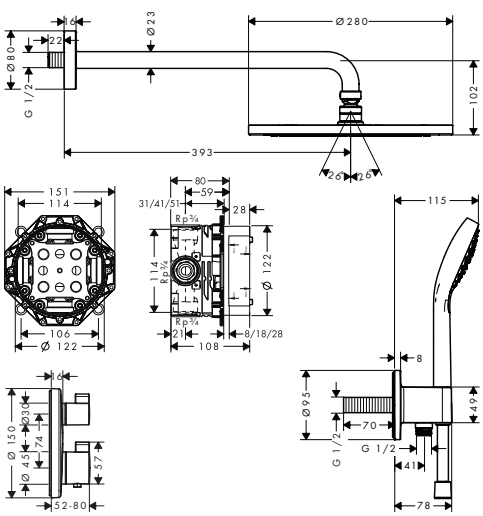

Croma Shower system 280 1jet with Ecostat S

finish	code no.	Euro
Chrome	27954000	1,176.30

AirPower · XXL Performance

- consists of: overhead shower, hand shower, shower arm, Thermostat, basic set, wall outlet, shower hose
- shower head size: 280 mm
- spray type overhead shower: RainAir
- spray type hand shower: Rain, IntenseRain, TurboRain
- maximum flow rate at 3 bar: 15,6 l/min
- minimum flow pressure: 1 bar
- pivot connector prevent hose from tangling

Consisting of:

- **Croma** Overhead shower 280 1jet (# 26220000)
- Shower arm 38.9 cm (# 27413000)
- **Croma Select S** Hand shower Vario (# 26802400)
- **Ecostat S** Thermostat for concealed installation for 2 functions (# 15758000)
- Basic set iBox universal (# 01800180)
- **FixFit** Wall outlet S with shower holder (# 26487000)
- **Isiflex** Shower hose 125 cm (# 28272000)

Measurements within scale drawings are in mm.

Technical specifications and units of measure are subject to change.

	finish	code no.	Euro

NEW





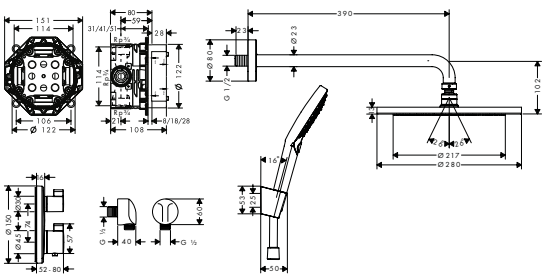

Croma Shower system 280 1jet with Ecostat S

Matt Black | 27961670 | 1,602.20

AirPower | XXL Performance

- consists of: overhead shower, hand shower, shower arm, Thermostat, basic set, wall outlet, shower holder, shower hose
- shower head size: 280 mm
- spray type overhead shower: RainAir
- spray type hand shower: Rain, RainAir, Whirl
- minimum flow pressure: 1 bar
- pivot connector prevent hose from tangling

Consisting of:

- **Croma** Overhead shower 280 1jet (# 26220670)
- Shower arm 38.9 cm (# 27413670)
- **Raindance Select S** Hand shower 120 3jet (# 26530670)
- **Ecostat S** Thermostat for concealed installation for 2 functions (# 15758670)
- Basic set iBox universal (# 01800180)
- Shower holder Porter S (# 28331670)
- **FixFit** Wall outlet E without non-return valve (# 27454670)
- **Isiflex** Shower hose 125 cm (# 28272670)



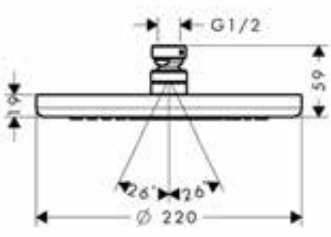

Croma Overhead shower 220 1jet

Chrome | 26464000 | 236.50

AirPower | Quick Clean | XXL Performance

- shower head size: 220 mm
- spray type: RainAir
- ball-joint: overhead shower angle adjustable
- material spray disc: metal
- maximum flow rate at 3 bar: 19 l/min
- flow rate RainAir spray (at 3 bar): 19 l/min
- minimum flow pressure: 1 bar
- spray disc removable for cleaning
- installation: ceiling or wall
- connection thread G ½
- connection dimension: DN15

Water saving EcoSmart version:

- **Croma** Overhead shower 220 1jet EcoSmart 9 l/min — Chrome | 26465000 | 236.50

Optional parts:

- Shower arm 38.9 cm — Chrome | 27413000 | 87.30
- Ceiling connector 10 cm — Chrome | 27479000 | 58.90

Measurements within scale drawings are in mm.

Technical specifications and units of measure are subject to change.

Croma 100

	finish	code no.	Euro
Croma 100 Overhead shower Multi	Chrome	27443000	81.30



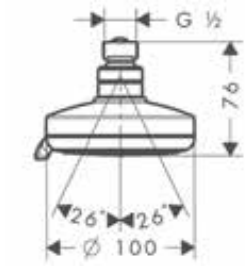

- shower head size: 100 mm
- spray type: Rain, MonoRain, Massage spray
- adjustment with shift on overhead shower
- ball-joint: overhead shower angle adjustable
- material spray disc: plastic
- grey spray disc
- maximum flow rate at 3 bar: 20 l/ min
- flow rate Rain spray (at 3 bar): 20 l/ min
- flow rate Mono spray (at 3 bar): 15 l/ min
- flow rate massage spray (at 3 bar): 14 l/ min
- minimum flow pressure: 1,2 bar
- installation: ceiling or wall
- connection thread G ½
- connection dimension: DN15

Optional parts:

· Shower arm 12.8 cm	Chrome	27411000	22.60

Croma 100 Overhead shower Vario	Chrome	27441000	52.00



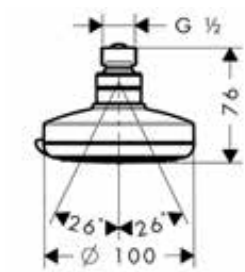

- shower head size: 100 mm
- spray type: Rain, Shampoo spray, normal spray, Massage spray
- adjustment with shift on overhead shower
- ball-joint: overhead shower angle adjustable
- material spray disc: plastic
- grey spray disc
- maximum flow rate at 3 bar: 22 l/ min
- flow rate Rain spray (at 3 bar): 22 l/ min
- flow rate shampoo spray (at 3 bar): 17 l/ min
- flow rate normal spray (at 3 bar): 20 l/ min
- flow rate massage spray (at 3 bar): 11 l/ min
- minimum flow pressure: 1,2 bar
- installation: ceiling or wall
- connection thread G ½
- connection dimension: DN15

Water saving EcoSmart version:

· **Croma 100** Overhead shower Vario EcoSmart 9 l/ min	Chrome	28462000	59.50

Optional parts:

· Shower arm 12.8 cm	Chrome	27411000	22.60

Measurements within scale drawings are in mm.

Technical specifications and units of measure are subject to change.

Crometta E

	finish	code no.	Euro
Crometta E Overhead shower 240 1jet	Chrome	26726000	212.30



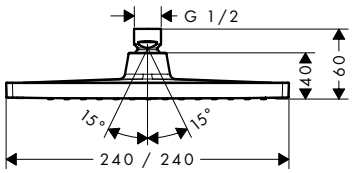

- shower head size: 240 x 240 mm
- spray type: Rain
- ball-joint: overhead shower angle adjustable
- material spray disc: plastic
- maximum flow rate at 3 bar: 18 l/min
- flow rate Rain spray (at 3 bar): 18 l/min
- minimum flow pressure: 1 bar
- installation: ceiling or wall
- connection thread G ½
- connection dimension: DN15

Water saving EcoSmart version:

· **Crometta E** Overhead shower 240 1jet EcoSmart 9 l/min	Chrome	26727000	214.50

Alternative products:

· **Crometta E** Overhead shower 240 1jet LowPressure	Chrome	26722000	212.30

Optional parts:

· Shower arm E 38.9 cm	Chrome	27446000	87.30
· Ceiling connector E 10 cm	Chrome	27467000	58.90

NEW



Crometta E Shower system 240 1jet with single lever mixer	Chrome	27957000	632.80



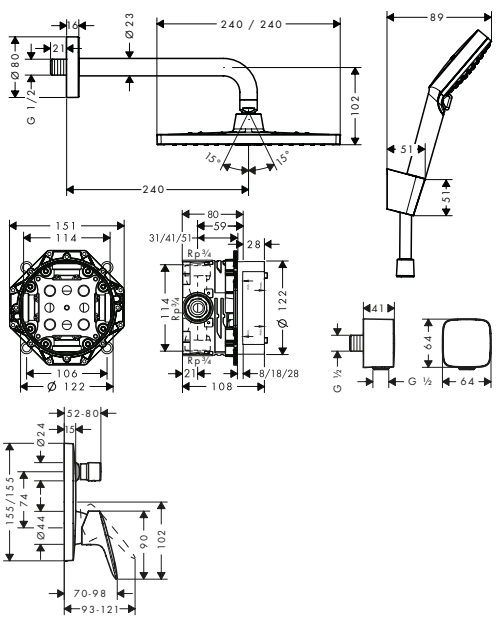

- consists of: overhead shower, hand shower, shower arm, Single lever bath mixer, basic set, wall outlet, shower holder, shower hose
- shower head size: 240 x 240 mm
- spray type overhead shower: Rain
- spray type hand shower: Rain, IntenseRain
- maximum flow rate at 3 bar: 18 l/min
- minimum flow pressure: 1 bar
- pivot connector prevent hose from tangling

Consisting of:

- **Crometta E** Overhead shower 240 1jet (# 26726000)
- Shower arm 24.1 cm (# 27409000)
- **Crometta** Hand shower Vario (# 26330400)
- **Logis** Single lever bath mixer for concealed installation for iBox universal (# 71405000)
- Basic set iBox universal (# 01800180)
- Shower holder Porter S (# 28331000)
- **FixFit** Wall outlet with non-return valve (# 26457000)
- **Isiflex** Shower hose 125 cm (# 28272000)

Measurements within scale drawings are in mm.

Technical specifications and units of measure are subject to change.

Crometta S

	finish	code no.	Euro
Crometta S Overhead shower 240 1jet · shower head size: 240 mm · spray type: Rain · ball-joint: overhead shower angle adjustable · material spray disc: plastic · maximum flow rate at 3 bar: 18 l/min · flow rate Rain spray (at 3 bar): 18 l/min · minimum flow pressure: 1 bar · installation: ceiling or wall · connection thread G ½ · connection dimension: DN15	Chrome	26723000	212.30
Water saving EcoSmart version: · **Crometta S** Overhead shower 240 1jet EcoSmart 9 l/min	Chrome	26724000	214.50
Alternative products: · **Crometta S** Overhead shower 240 1jet LowPressure	Chrome	26725000	212.30
Optional parts: · Shower arm 38.9 cm · Ceiling connector S 10 cm	Chrome Chrome	27413000 27393000	87.30 59.10



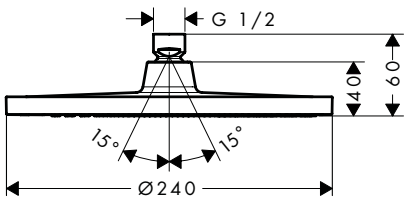

NEW

	finish	code no.	Euro
Crometta S Shower system 240 1jet with single lever mixer · consists of: overhead shower, hand shower, shower arm, Single lever bath mixer, basic set, wall outlet, shower holder, shower hose · shower head size: 240 mm · spray type overhead shower: Rain · spray type hand shower: Rain, IntenseRain · minimum flow pressure: 1 bar · pivot connector prevent hose from tangling	Chrome	27958000	682.10
Consisting of: · **Crometta S** Overhead shower 240 1jet (# 26723000) · Shower arm 24.1 cm (# 27409000) · **Crometta** Hand shower Vario (# 26330400) · **Focus** Single lever bath mixer for concealed installation for iBox universal (# 31945000) · Basic set iBox universal (# 01800180) · Shower holder Porter S (# 28331000) · **FixFit** Wall outlet S with non-return valve (# 27456000) · **Isiflex** Shower hose 125 cm (# 28272000)			



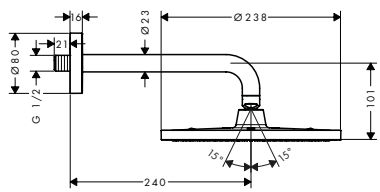

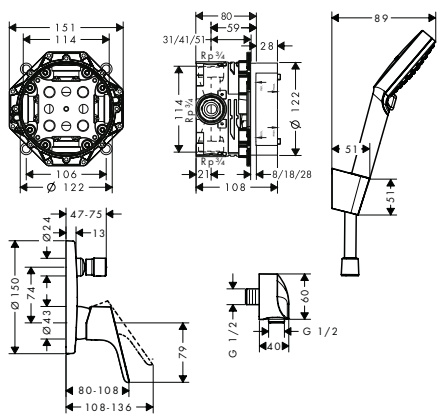

Measurements within scale drawings are in mm.

Technical specifications and units of measure are subject to change.

Crometta 85

	finish	code no.	Euro



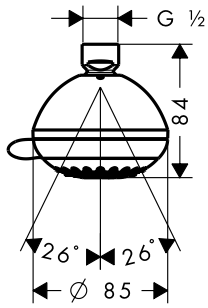

Crometta 85 Overhead shower Multi — Chrome — 28425000 — 57.30

Quick Clean

- shower head size: 85 mm
- spray type: MonoRain, normal spray, Massage spray
- adjustment with shift on overhead shower
- ball-joint: overhead shower angle adjustable
- material spray disc: plastic
- grey spray disc
- maximum flow rate at 3 bar: 15 l/min
- flow rate Mono spray (at 3 bar): 13 l/min
- flow rate normal spray (at 3 bar): 15 l/min
- flow rate massage spray (at 3 bar): 13 l/min
- minimum flow pressure: 1 bar
- installation: ceiling or wall
- connection thread G ½
- connection dimension: DN15

Optional parts:

- Shower arm 12.8 cm — Chrome — 27411000 — 22.60



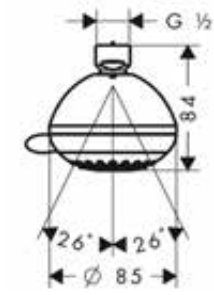

Crometta 85 Overhead shower Vario — Chrome — 28424000 — 46.20

Quick Clean

- shower head size: 85 mm
- spray type: normal spray, Vario spray
- adjustment with shift on overhead shower
- ball-joint: overhead shower angle adjustable
- material spray disc: plastic
- grey spray disc
- maximum flow rate at 3 bar: 18 l/min
- flow rate normal spray (at 3 bar): 18 l/min
- flow rate Vario spray (at 3 bar): 14 l/min
- minimum flow pressure: 0.05 MPa
- installation: ceiling or wall
- connection thread G ½
- connection dimension: DN15

Optional parts:

- Shower arm 12.8 cm — Chrome — 27411000 — 22.60



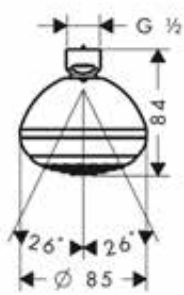

Crometta 85 Overhead shower 1jet Green 6 l/min — Chrome — 28423000 — 45.60

EcoSmart Quick Clean

- shower head size: 85 mm
- spray type: normal spray
- ball-joint: overhead shower angle adjustable
- material spray disc: plastic
- grey spray disc
- maximum flow rate at 3 bar: 5,7 l/min
- flow rate normal spray (at 3 bar): 5,7 l/min
- minimum flow pressure: 1 bar
- installation: ceiling or wall
- connection thread G ½
- connection dimension: DN15

Optional parts:

- Shower arm 12.8 cm — Chrome — 27411000 — 22.60

Measurements within scale drawings are in mm.

Technical specifications and units of measure are subject to change.

Vernis Blend

		finish	code no.	Euro
NEW	**Vernis Blend** Overhead shower 200 1jet · shower head size: 205 mm · spray type: Rain · ball-joint: overhead shower angle adjustable · material spray disc: plastic · maximum flow rate at 3 bar: 12,4 l/min · minimum flow pressure: 1 bar · overhead shower removable for cleaning · installation: ceiling or wall · connection thread G ½ · connection dimension: DN15	Chrome Matt Black	26271000 26271670	100.00 140.00
	Water saving EcoSmart version:			
NEW	· **Vernis Blend** Overhead shower 200 1jet EcoSmart	Chrome Matt Black	26277000 26277670	100.00 140.00
NEW	· **Vernis Blend** Overhead shower 200 1jet Green	Chrome	26093000	100.00
	Alternative products:			
NEW	· **Vernis Blend** Overhead shower 200 1jet LowPressure	Chrome	26095000	100.00
	Optional parts:			
NEW	· **Vernis Blend** Shower arm 24 cm	Chrome Matt Black	27809000 27809670	47.00 65.80
NEW	· **Vernis Blend** Ceiling connector 10 cm	Chrome Matt Black	27804000 27804670	45.00 63.00
NEW	· **Vernis Blend** Ceiling connector 30 cm	Chrome Matt Black	27805000 27805670	60.00 84.00
NEW	**Vernis Blend** Overhead shower 200 1jet project pack (12 pcs.) · shower head size: 205 mm · spray type: Rain · ball-joint: overhead shower angle adjustable · material spray disc: plastic · maximum flow rate at 3 bar: 12,4 l/min · minimum flow pressure: 1 bar · overhead shower removable for cleaning · installation: ceiling or wall · connection thread G ½ · connection dimension: DN15 · packaging unit optional parts: 1 piece · packaging unit: 12 pieces	Chrome	26365000	1,175.00
	Consisting of:			
NEW	· **Vernis Blend** Overhead shower 200 1jet (# 26271000)			
	Optional parts:			
NEW	· **Vernis Blend** Shower arm 24 cm	Chrome	27809000	47.00
NEW	· **Vernis Blend** Ceiling connector 10 cm	Chrome	27804000	45.00
NEW	· **Vernis Blend** Ceiling connector 30 cm	Chrome	27805000	60.00

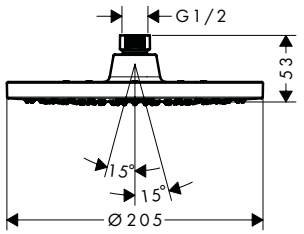



Measurements within scale drawings are in mm.

Technical specifications and units of measure are subject to change.

Vernis Shape

		finish	code no.	Euro
NEW	**Vernis Shape** Overhead shower 230 1jet · shower head size: 230 x 170 mm · spray type: Rain · ball-joint: overhead shower angle adjustable · material spray disc: plastic · maximum flow rate at 3 bar: 12,4 l/min · minimum flow pressure: 1 bar · overhead shower removable for cleaning · installation: ceiling or wall · connection thread G ½ · connection dimension: DN15	Chrome Matt Black	26281000 26281670	100.00 140.00
	Water saving EcoSmart version:			
NEW	· **Vernis Shape** Overhead shower 230 1jet EcoSmart	Chrome Matt Black	26283000 26283670	100.00 140.00
NEW	· **Vernis Shape** Overhead shower 230 1jet Green	Chrome	26094000	100.00
	Alternative products:			
NEW	· **Vernis Shape** Overhead shower 200 1jet LowPressure	Chrome	26096000	100.00
	Optional parts:			
NEW	· **Vernis Shape** Shower arm 24 cm	Chrome Matt Black	26405000 26405670	47.00 65.80
NEW	· **Vernis Shape** Ceiling connector 10 cm	Chrome Matt Black	26406000 26406670	45.00 63.00
NEW	· **Vernis Shape** Ceiling connector 30 cm	Chrome Matt Black	26407000 26407670	60.00 84.00



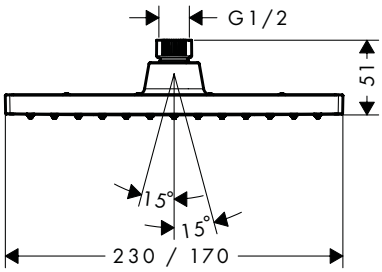

		finish	code no.	Euro
NEW	**Vernis Shape** Overhead shower 230 1jet project pack (12 pcs.) · shower head size: 230 x 170 mm · spray type: Rain · ball-joint: overhead shower angle adjustable · material spray disc: plastic · maximum flow rate at 3 bar: 12,4 l/min · minimum flow pressure: 1 bar · overhead shower removable for cleaning · installation: ceiling or wall · connection thread G ½ · connection dimension: DN15 · packaging unit optional parts: 1 piece · packaging unit: 12 pieces	Chrome	26579000	1,175.00
	Consisting of:			
NEW	· **Vernis Shape** Overhead shower 230 1jet (# 26281000)			
	Optional parts:			
NEW	· **Vernis Shape** Shower arm 24 cm	Chrome	26405000	47.00
NEW	· **Vernis Shape** Ceiling connector 10 cm	Chrome	26406000	45.00
NEW	· **Vernis Shape** Ceiling connector 30 cm	Chrome	26407000	60.00



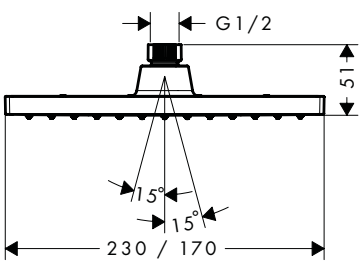

Measurements within scale drawings are in mm.

Technical specifications and units of measure are subject to change.

Clubmaster



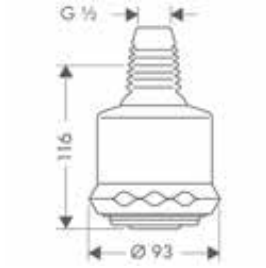

	finish	code no.	Euro
Clubmaster Overhead shower 3jet	Chrome	28496000	213.50

Quick Clean

- shower head size: 93 mm
- spray type: Soft spray, normal spray, Massage spray
- adjustment with shift on overhead shower
- ball-joint: overhead shower angle adjustable
- material spray disc: plastic
- grey spray disc
- maximum flow rate at 3 bar: 19 l/min
- flow rate soft spray (at 3 bar): 17 l/min
- flow rate normal spray (at 3 bar): 19 l/min
- flow rate massage spray (at 3 bar): 12 l/min
- minimum flow pressure: 2 bar
- installation: wall
- connection thread G ½
- connection dimension: DN15

Optional parts:

· Shower arm 10 cm	Chrome	27438000	75.20
· Shower arm 12.8 cm	Chrome	27411000	22.60

Shower arms for overhead showers



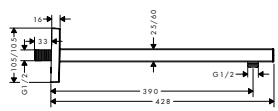

Shower arm square 39 cm	Chrome	27694000	195.00
	Brushed Bronze	27694140	292.70
	Brushed Black	27694340	292.70
	Chrome Matt Black	27694670	273.10
	Matt White	27694700	273.10
	Polished Gold Optic	27694990	292.70

- length: 390 mm
- installation type: exposed installation
- connection thread G ½
- connection dimension DN15

NEW



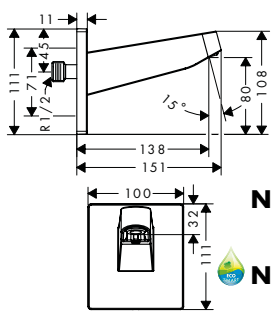

Pulsify Wall connector for overhead shower 260	Chrome	24149000	80.00
	Matt Black	24149670	104.00
	Matt White	24149700	104.00

available from January 2023

- material: plastic
- connection type: G ½

Optional parts:

· **Pulsify S** Overhead shower 260 1jet	Chrome	24140000	250.00
	Matt Black	24140670	325.00
	Matt White	24140700	325.00
· **Pulsify S** Overhead shower 260 1jet EcoSmart	Chrome	24141000	250.00
	Matt Black	24141670	325.00
	Matt White	24141700	325.00

NEW

NEW

NEW



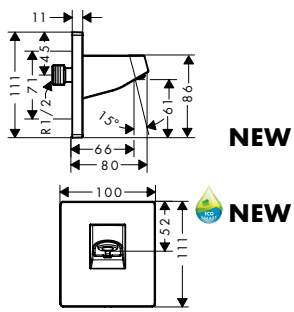

Pulsify Wall connector for overhead shower 105	Chrome	24139000	50.00
	Matt Black	24139670	65.00
	Matt White	24139700	65.00

- material: plastic
- connection type: G ½

Optional parts:

· **Pulsify S** Overhead shower 105 1jet	Chrome	24130000	85.00
	Matt Black	24130670	110.50
	Matt White	24130700	110.50
· **Pulsify S** Overhead shower 105 1jet Green	Chrome	24132000	85.00
	Matt Black	24132670	110.50
	Matt White	24132700	110.50

NEW

NEW

NEW

Measurements within scale drawings are in mm.

Technical specifications and units of measure are subject to change.

Overhead showers

	finish	code no.	Euro
Shower arm 10 cm · length: 100 mm · installation type: exposed installation · material: brass · connection thread G ½ · connection dimension DN15	Chrome	27438000	75.20
Optional parts: · **Clubmaster** Overhead shower 3jet	Chrome	28496000	213.50
Shower arm 12.8 cm · length: 128 mm · installation type: exposed installation · material: brass · connection thread G ½ · connection dimension DN15	Chrome	27411000	22.60
Shower arm 23 cm · length: 230 mm · installation type: exposed installation · material: brass · connection thread G ½ · connection dimension DN15	Chrome	27412000	61.80
NEW **Vernis Blend** Shower arm 24 cm · length: 240 mm · installation type: exposed installation · material: solid brass · version: 90° angle · connection thread G ½ · connection dimension DN15	Chrome Matt Black	27809000 27809670	47.00 65.80
Shower arm 24.1 cm · length: 241 mm · installation type: exposed installation · material: brass · version: 90° angle · connection thread G ½ · connection dimension DN15	Chrome	27409000	61.80
Shower arm 38.9 cm · length: 389 mm · installation type: exposed installation · material: brass · version: 90° angle · connection thread G ½ · connection dimension DN15	Chrome Brushed Bronze Brushed Black Chrome Matt Black Matt White Polished Gold Optic	27413000 27413140 27413340 27413670 27413700 27413990	87.30 130.90 130.90 122.20 122.20 130.90

Measurements within scale drawings are in mm.

Technical specifications and units of measure are subject to change.

	finish	code no.	Euro
Vernis Shape Shower arm 24 cm	Chrome	26405000	47.00
	Matt Black	26405670	65.80

NEW

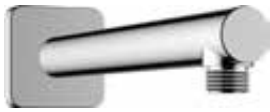

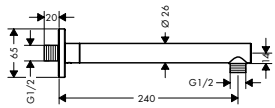

- length: 240 mm
- shaft Ø: 26 mm
- installation type: exposed installation
- material: solid brass
- version: 90° angle
- connection thread G ½
- connection dimension DN15

Shower arm E 38.9 cm	Chrome	27446000	87.30



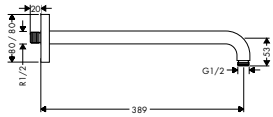

- length: 389 mm
- installation type: exposed installation
- material: brass
- version: 90° angle
- connection thread G ½
- connection dimension DN15

Ceiling connectors for overhead showers

Ceiling connector 10 cm	Chrome	27479000	58.90
	Brushed Bronze	27479140	88.30
	Brushed Black	27479340	88.30
	Chrome Matt Black	27479670	82.40
	Matt White	27479700	82.40
	Polished Gold Optic	27479990	88.30



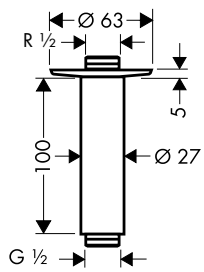

- length: 100 mm
- shaft Ø: 27 mm
- purpose of use: also usable as an extension
- installation type: exposed installation
- material: brass
- connection type: G ½ NPT
- connection thread G ½
- connection dimension G ½

Ceiling connector S 10 cm	Chrome	27393000	59.10
	Brushed Bronze	27393140	88.60
	Brushed Black	27393340	88.60
	Chrome Matt Black	27393670	82.70
	Matt White	27393700	82.70
	Polished Gold Optic	27393990	88.60



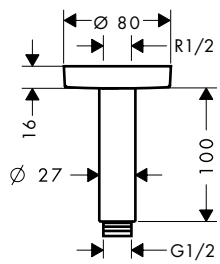

- length: 100 mm
- shaft Ø: 27 mm
- purpose of use: also usable as an extension
- installation type: exposed installation
- material: brass
- connection type: G ½ NPT
- connection thread G ½
- connection dimension DN15

Vernis Blend Ceiling connector 10 cm	Chrome	27804000	45.00
	Matt Black	27804670	63.00

NEW



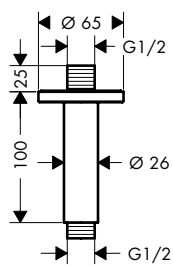

- length: 100 mm
- shaft Ø: 26 mm
- installation type: exposed installation
- material: solid brass
- connection type: G ½ NPT
- connection thread G ½
- connection dimension G ½

Alternative sizes:

· **Vernis Blend** Ceiling connector 30 cm	Chrome	27805000	60.00
	Matt Black	27805670	84.00

Measurements within scale drawings are in mm.

Technical specifications and units of measure are subject to change.

	finish	code no.	Euro



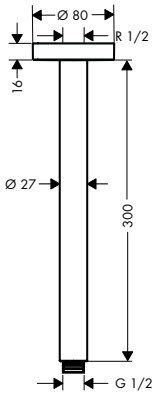

Ceiling connector S 30 cm

- length: 300 mm
- shaft Ø: 27 mm
- installation type: exposed installation
- material: brass
- connection thread G ½
- connection dimension DN15

Chrome	27389000	84.10
Brushed Bronze	27389140	126.60
Brushed Black Chrome	27389340	126.60
Matt Black	27389670	118.30
Matt White	27389700	118.30
Polished Gold Optic	27389990	126.60



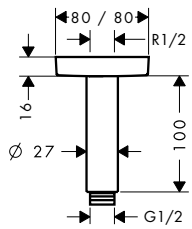

Ceiling connector E 10 cm

- length: 100 mm
- shaft Ø: 27 mm
- purpose of use: also usable as an extension
- installation type: exposed installation
- material: brass
- connection thread G ½
- connection dimension DN15

Chrome	27467000	58.90

NEW



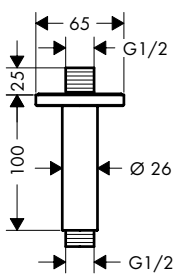

Vernis Shape Ceiling connector 10 cm

- length: 100 mm
- shaft Ø: 26 mm
- installation type: exposed installation
- material: solid brass
- connection type: G ½ NPT
- connection thread G ½
- connection dimension G ½

Chrome	26406000	45.00
Matt Black	26406670	63.00

Alternative sizes:

- **Vernis Shape** Ceiling connector 30 cm **NEW**

Chrome	26407000	60.00
Matt Black	26407670	84.00



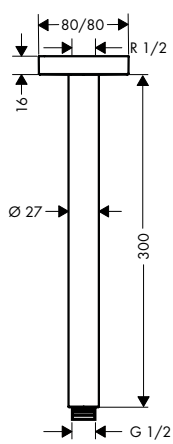

Ceiling connector E 30 cm

- length: 300 mm
- shaft Ø: 27 mm
- installation type: exposed installation
- material: brass
- connection thread G ½
- connection dimension DN15

Chrome	27388000	84.10

Measurements within scale drawings are in mm.

Technical specifications and units of measure are subject to change.

Body showers

	finish	code no.	Euro
Rainfinity Shoulder shower 500 1jet with shower shelf	Chrome Matt White	26243000 26243700	487.80 634.00



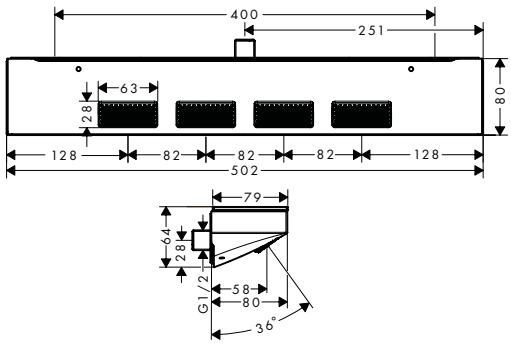

- shower head size: 502 x 80 mm
- spray type: PowderRain
- spray area: 309 x 28 mm
- field of application: functions as overhead, shoulder or side shower
- flow rate PowderRain spray (at 3 bar): 14,5 l/min
- minimum flow pressure: 1,1 bar
- connection thread: G ½
- connection dimension: DN15
- material: metal
- shelf made of safety glass
- surface of the shelf at colour variant -000 = mirror glass, at colour variant -700 = graphite colour, satined

Bodyvette Body shower 1jet	Chrome	28466000	106.10



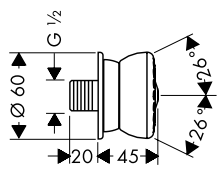

- spray type: normal spray
- grey spray disc
- ball-joint: side shower angle adjustable
- rosette: circular
- maximum flow rate at 3 bar: 5 l/min
- flow rate normal spray (at 3 bar): 5 l/min
- minimum flow pressure: 1 bar
- connection thread: G ½
- connection dimension: DN15

Alternative products:

· **Bodyvette** Body shower 1jet stop	Chrome	28467000	122.80

Measurements within scale drawings are in mm.

Technical specifications and units of measure are subject to change.

Showerpipes and shower panels



Rainmaker Select Showerpipes	page 226		
Raindance Select E / Raindance E Showerpipes	page 229		
Pulsify S Showerpipes	page 242		
Croma Select E Showerpipes	page 254		
Croma Showerpipes	page 260		
Vernis Blend Showerpipes	page 272		
Rainfinity Showerpipes	page 228		
Raindance Select S / Raindance S Showerpipes	page 236		
Croma Select S Showerpipes	page 245		
Croma E Showerpipes	page 258		
Crometta S / Crometta E Showerpipes	page 264		
Vernis Shape Showerpipes	page 276		

hansgrohe Showerpipes

Product ranges at a glance

	Rainmaker Select	**Rainfinity**	**Raindance Select E**		
			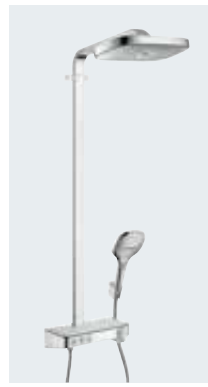	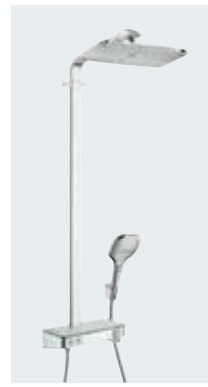	
	Showerpipe 460 3jet	Showerpipe 360 1jet	Showerpipe 300 3jet	Showerpipe 300 1jet	Showerpipe 300 1jet
Finish	-400	-000, -700	-000, -400	-000, -400	-000
Standard	27 l/min	19,6 l/min	19 l/min	16,9 l/min	16 l/min
EcoSmart 9 l/min	■				■
Green 6 l/min					
Bath					
Single lever mixer					
Reno					
Swiveling shower arm					
Riser pipe can be shortened					
Select	■	■	■	■	■
QuickClean	■	■	■	■	■
XXL Performance	■	■	■	■	■
CoolContact	■		■	■	■
Water flow control					
Fast drain					
AirPower			■	■	■
PowderRain		■			
	page 226	page 228	page 229		page 234

■ Available

Raindance E

Raindance Select S

Raindance S

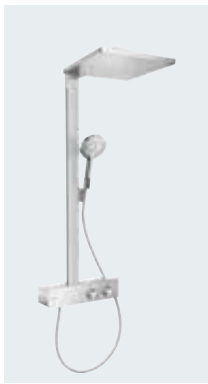

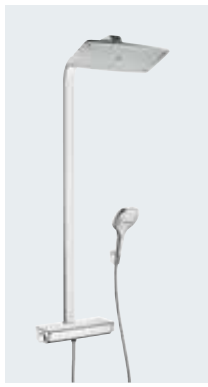

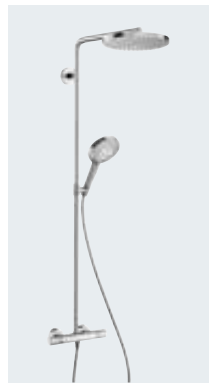

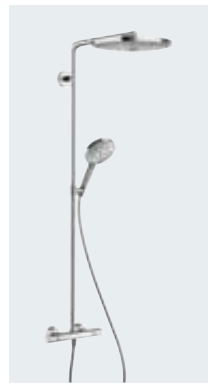

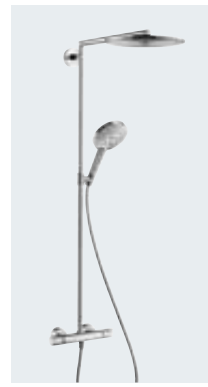



Showerpipe 300 1jet	Showerpipe 360 1jet	Showerpipe 240 1jet PowderRain	Showerpipe 300 2jet	Showerpipe 300 1jet	Showerpipe 240 1jet
-000	-000, -400	-000, -140, -340 -670, -700, -990	-000, -400	-000	-000
16 l/min	15 l/min	16 l/min	15 l/min	16 l/min	16 l/min
■					■
	■				■
		■	■	■	■
		■	■	■	■
■	■	■	■	■	■
■	■	■	■	■	■
■	■	■	■	■	■
■	■				
■	■		■	■	■
		■			
page 235		page 236		page 239	

hansgrohe Showerpipes

Product ranges at a glance

	Pulsify S		**Croma Select S**		**Croma Select E**
	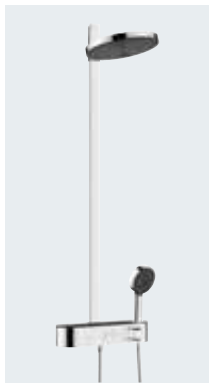	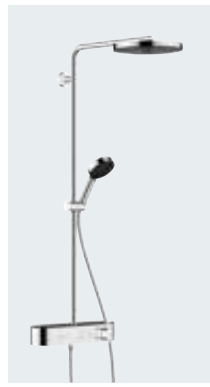	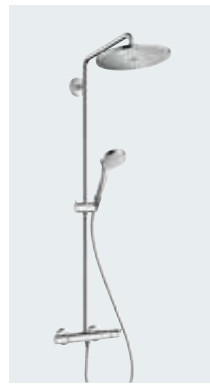	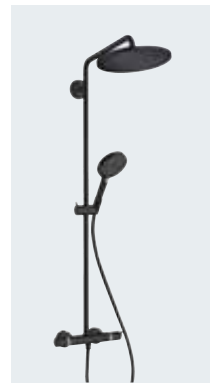	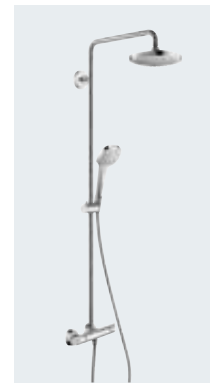
	Showerpipe 260 2jet	Showerpipe 260 1jet	Showerpipe 280 1jet	Showerpipe 280 1jet	Showerpipe 180 2jet
Finish	-000, -670, -700	-000	-000	-140, -340 -670, -700, -990	-400
Standard	12,9 l/min	10,9 l/min	16 l/min	14,5 l/min	16 l/min
EcoSmart 9 l/min	■	■	■	■	■
Green 6 l/min					
Bath		■	■		■
Single lever mixer			■		■
Reno			■		
Swiveling shower arm		■	■	■	■
Riser pipe can be shortened	■	■	■	■	■
Select	■	■		■	■
QuickClean	■	■	■	■	■
XXL Performance	■	■	■	■	■
CoolContact	■	■			
Water flow control	■	■			
Fast drain	■	■			
AirPower			■	■	
PowderRain	■	■			
	page 242		page 245		page 254

■ Available

Croma E	**Croma**	**Crometta S**	**Crometta E**	**Vernis Blend**	**Vernis Shape**
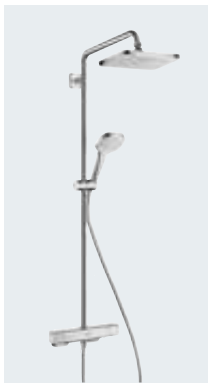		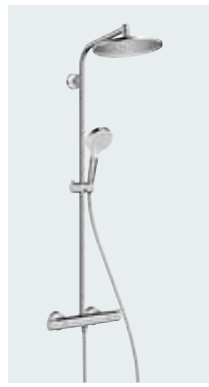	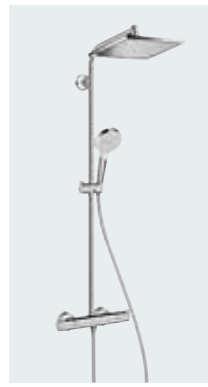	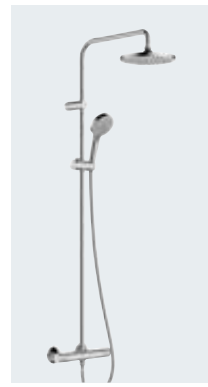	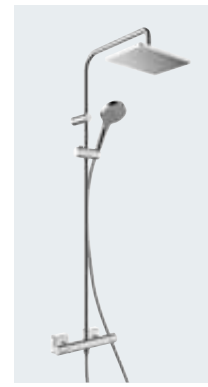
Showerpipe 280 1jet	Showerpipe 220 1jet	Showerpipe 240 1jet	Showerpipe 240 1jet	Showerpipe 200 1jet	Showerpipe 230 1jet
-000	-000	-000	-000	-000, -670	-000, -670
15 l/min	15 l/min	16 l/min	15 l/min	15,9 l/min	15,9 l/min
■	■	■	■	■	■
				■	■
■	■	■	■	■	■
	■	■	■		
	■	■	■	■	■
■	■				
■	■	■	■		
■					
■	■	■	■	■	■
■	■	■	■	■	■
■					
■	■				
page 258	page 260	page 264	page 268	page 272	page 276

Rainmaker Select Showerpipes



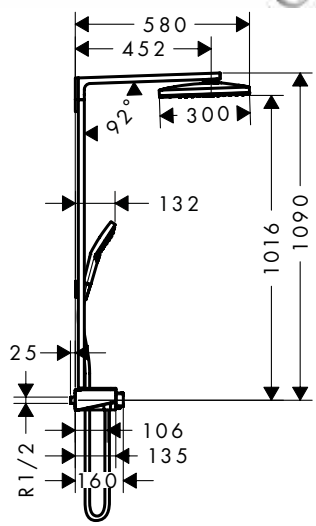

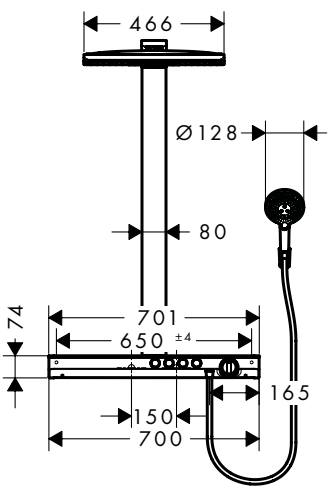

	finish	code no.	Euro
Rainmaker Select Showerpipe 460 3jet with thermostat	White/Chrome	27106400	3,922.40

Cool Contact · Select · Quick Clean · XXL Performance

- consists of: overhead shower, hand shower, shower thermostat, shower hose, shower holder, shower bar
- overhead shower Rainmaker Select 460 3jet
- shower head size overhead shower: 460 x 300 mm
- spray type overhead shower: Rain, MonoRain, RainStream
- convenient diversion via Select button
- easy cleanable spray disc in glass optics
- spray type hand shower: Rain, RainAir, Whirl
- shelf made of safety glass
- shelf finish: white
- maximum flow rate at 3 bar: 27 l/ min
- minimum flow pressure: 1,5 bar
- operating pressure: min. 1,5 bar/ max. 10 bar
- bar width: 80 mm
- shower arm length overhead shower: 450 mm
- CoolContact thermostat: Prevents the housing from heating up, making showering even safer
- thermostat ShowerTablet Select 700
- isolated water conduction
- safety lock at 40°C
- adjustable hot water limitation
- convenient diversion via Select button
- simultaneous utilization of 4 functions
- mounting type: exposed installation
- connection dimension DN15
- connection thread G ½
- centre distance 150 ± 18 mm

Consisting of:

- **Raindance Select S** Hand shower 120 3jet (# 26530400)
- Shower holder Porter S (# 28331000)
- **Isiflex** Shower hose 160 cm (# 28276000)

Water saving EcoSmart version:

Rainmaker Select Showerpipe 460 3jet EcoSmart 9 l/ min with thermostat	White/Chrome	27029400	3,922.40

Measurements within scale drawings are in mm.

Technical specifications and units of measure are subject to change.

	finish	code no.	Euro
Rainmaker Select Showerpipe 460 2jet with thermostat	White/Chrome	27109400	3,432.20



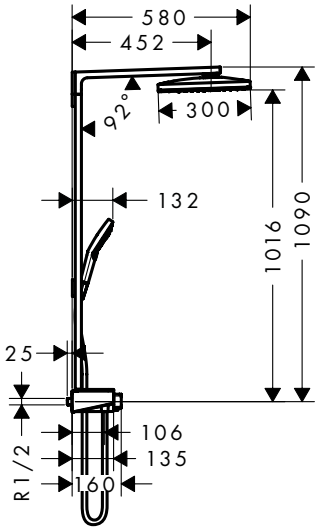

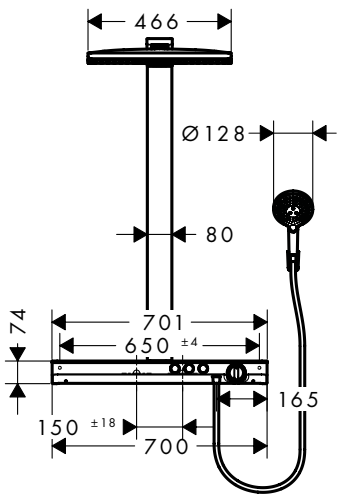

- consists of: overhead shower, hand shower, shower thermostat, shower hose, shower holder, shower bar
- overhead shower Rainmaker Select 460 2jet
- shower head size overhead shower: 460 x 300 mm
- spray type overhead shower: Rain, RainStream
- easy cleanable spray disc in glass optics
- spray type hand shower: RainAir, Rain, Whirl
- shelf made of safety glass
- shelf finish: white
- maximum flow rate at 3 bar: 27 l/min
- minimum flow pressure: 1,5 bar
- operating pressure: min. 1,5 bar/max. 10 bar
- bar width: 80 mm
- shower arm length overhead shower: 450 mm
- CoolContact thermostat: Prevents the housing from heating up, making showering even safer
- thermostat ShowerTablet Select 700
- isolated water conduction
- safety lock at 40°C
- adjustable hot water limitation
- convenient diversion via Select button
- simultaneous utilization of 3 functions
- mounting type: exposed installation
- connection dimension DN15
- connection thread G ½
- centre distance 150 ± 18 mm

Consisting of:

- **Raindance Select S** Hand shower 120 3jet (# 26530400)
- **Isiflex** Shower hose 160 cm (# 28276000)
- Shower holder Porter S (# 28331000)

Water saving EcoSmart version:

Rainmaker Select Showerpipe 460 2jet EcoSmart 9 l/min with thermostat	White/Chrome	27028400	3,432.20

Measurements within scale drawings are in mm.

Technical specifications and units of measure are subject to change.

Rainfinity Showerpipe



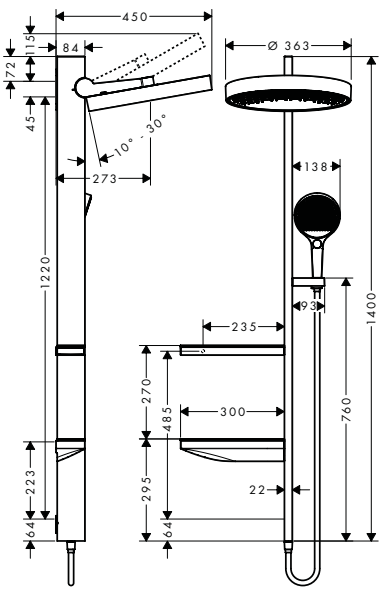

	finish	code no.	Euro
Rainfinity Showerpipe 360 1jet for concealed installation	Chrome	26842000	1,354.90
	Matt White	26842700	1,761.20

Select · Quick Clean · XXL Performance

- consists of: overhead shower, hand shower, shower holder, shower hose, 2 glass shelves, shower bar
- overhead shower Rainfinity 360 1jet
- shower head size overhead shower: 360 mm
- spray type overhead shower: PowderRain
- spray disc surface: graphite
- spray type hand shower: MonoRain, PowderRain, Intense PowderRain
- shower holder inclination angle can be adjusted continously
- shower arm vertically inclinable by 10-30°
- shelf made of safety glass
- surface of the shelf at colour variant -000 = mirror glass, at colour variant -700 = graphite colour, satined
- requires a mixer for 2 functions
- maximum flow rate at 3 bar: 19,6 l/min
- minimum flow pressure: 2,4 bar
- operating pressure: min. 2,4 bar/ max. 6 bar
- mounting type: exposed installation
- bar width: 22 mm
- isolated water conduction
- water connection: in the lower shelf, covert
- connection dimension: DN15
- connection thread G ½

Consisting of:

- **Rainfinity** Hand shower 130 3jet (# 26864XXX)
- **Isiflex** Shower hose 160 cm (# 28276XXX)

Required parts:

· **Rainfinity** Basic set for showerpipe 360 1jet for concealed installation		26840180	119.20
· **RainSelect** Thermostat for concealed installation for 2 functions	Chrome	15380000	1,154.40
	Matt White	15380700	1,500.60
· **RainSelect** Basic set for 2 functions		15310180	630.00



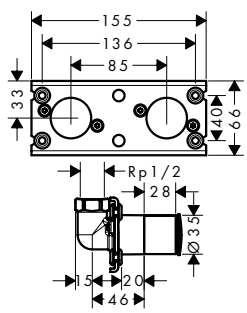

Rainfinity Basic set for showerpipe 360 1jet for concealed installation		26840180	119.20

- suitable for Showerpipe 360 1jet for concealed installation
- sound-decoupled installation
- The position of the connections is given, thus easy installation
- easy mounting
- connection dimension: G ½

Optional parts:

· **Rainfinity** Showerpipe 360 1jet for concealed installation	Chrome	26842000	1,354.90
	Matt White	26842700	1,761.20

Measurements within scale drawings are in mm.

Technical specifications and units of measure are subject to change.

Raindance Select E Showerpipes



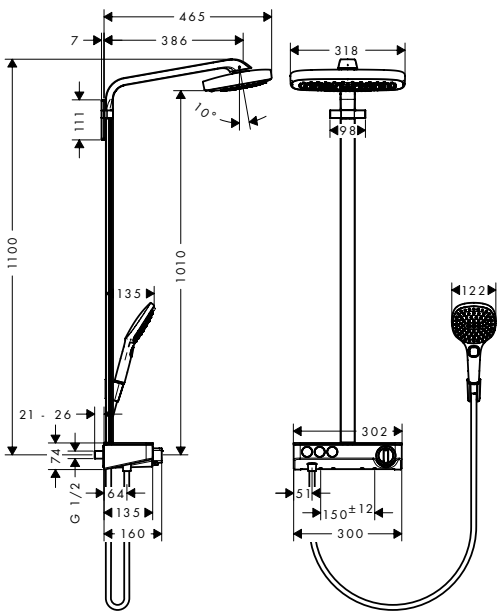

Raindance Select E
Showerpipe 300 3jet
with ShowerTablet Select 300

- consists of: overhead shower, hand shower, shower thermostat, shower hose, shower holder, shower bar
- overhead shower Raindance Select E 300 3jet
- shower head size overhead shower: 300 x 190 mm
- spray type overhead shower: RainAir, Rain, RainStream
- convenient diversion via Select button
- spray disc surface in two variants: chrome or white
- spray type hand shower: RainAir, Rain, Whirl
- shelf made of safety glass
- surface of the shelf at color variant -000 = mirror glass, at color variant -400 = white glass
- maximum flow rate at 3 bar: 19 l/min
- flow rate RainAir spray (at 3 bar): 16 l/min
- flow rate Rain spray (at 3 bar): 16 l/min
- flow rate RainStream spray (at 3 bar): 19 l/min
- minimum flow pressure: 2 bar
- operating pressure: min. 2 bar/max. 10 bar
- bar width: 40 mm
- shower arm length overhead shower: 380 mm
- CoolContact thermostat: Prevents the housing from heating up, making showering even safer
- thermostat ShowerTablet Select 300
- isolated water conduction
- safety lock at 40°C
- adjustable hot water limitation
- convenient diversion via Select button
- mounting type: exposed installation
- connection dimension DN15
- connection thread G ½
- centre distance 150 ± 12 mm
- in case of installation on existing G ¾ connections, adaptor # 02026000 must be used

Consisting of:
- **Raindance Select E** Hand shower 120 3jet (# 26520XXX)
- Shower holder Porter S (# 28331000)
- **Isiflex** Shower hose 160 cm (# 28276000)

Optional parts:
- S-connections adapter G ¾ for renovation

finish	code no.	Euro
Chrome	27127000	2,054.30
White/Chrome	27127400	2,054.30
Chrome	02026000	32.20

Cool Contact · Select · AirPower · Quick Clean · XXL Performance

Measurements within scale drawings are in mm.

Technical specifications and units of measure are subject to change.



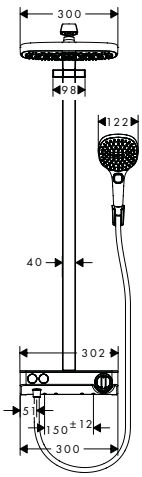

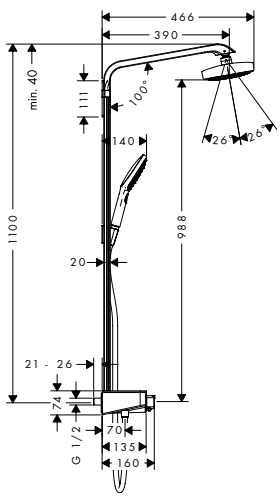

	finish	code no.	Euro
Raindance Select E Showerpipe 300 2jet with ShowerTablet Select 300	Chrome White/Chrome	27126000 27126400	1,733.50 1,733.50

- consists of: overhead shower, hand shower, shower thermostat, shower hose, shower holder, shower bar
- overhead shower Raindance Select E 300 2jet
- shower head size overhead shower: 300 x 160 mm
- spray type overhead shower: RainAir, Rain
- convenient diversion via Select button
- ball-joint: overhead shower angle adjustable
- spray disc surface in two variants: chrome or white
- spray type hand shower: RainAir, Rain, Whirl
- shelf made of safety glass
- surface of the shelf at color variant -000 = mirror glass, at color variant -400 = white glass
- maximum flow rate at 3 bar: 16 l/ min
- flow rate RainAir spray (at 3 bar): 16 l/ min
- flow rate Rain spray (at 3 bar): 16 l/ min
- minimum flow pressure: 1,5 bar
- operating pressure: min. 1,5 bar/ max. 10 bar
- bar width: 40 mm
- hand shower wall support
- shower arm length overhead shower: 380 mm
- CoolContact thermostat: Prevents the housing from heating up, making showering even safer
- thermostat ShowerTablet Select 300
- isolated water conduction
- safety lock at 40°C
- adjustable hot water limitation
- convenient diversion via Select button
- mounting type: exposed installation
- connection dimension DN15
- connection thread G ½
- centre distance 150 ± 12 mm
- in case of installation on existing G ¾ connections, adaptor # 02026000 must be used

Consisting of:
- **Raindance Select E** Hand shower 120 3jet (# 26520XXX)
- Shower holder Porter S (# 28331000)
- **Isiflex** Shower hose 160 cm (# 28276000)

Water saving EcoSmart version:

· **Raindance Select E** Showerpipe 300 2jet EcoSmart 9 l/ min with ShowerTablet Select 300	Chrome White/Chrome	27283000 27283400	1,733.50 1,733.50

Optional parts:

· S-connections adapter G ¾ for renovation	Chrome	02026000	32.20

Measurements within scale drawings are in mm.

Technical specifications and units of measure are subject to change.

Raindance E Showerpipes



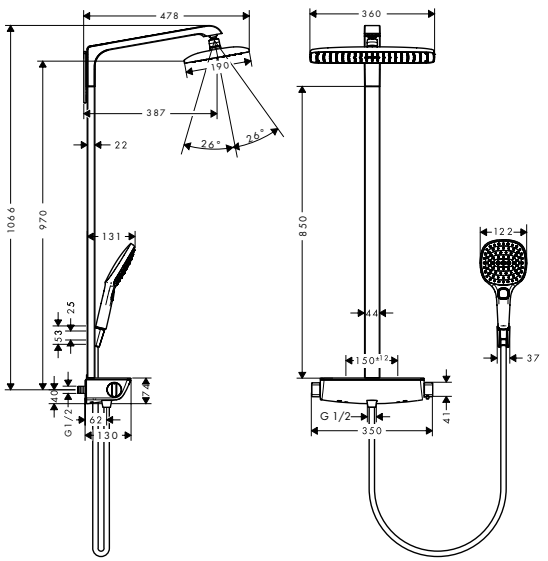

Raindance E Showerpipe 360 1jet with thermostat

finish	code no.	Euro
Chrome	27112000	1,459.80
White/Chrome	27112400	1,459.80

Cool Contact · Select · AirPower · Quick Clean · XXL Performance

- consists of: overhead shower, hand shower, shower thermostat, shower hose, shower holder, shower bar
- overhead shower Raindance E 360 Air
- shower head size overhead shower: 360 x 190 mm
- spray type overhead shower: RainAir
- ball-joint: overhead shower angle adjustable
- spray type hand shower: RainAir, Rain, Whirl
- shelf made of safety glass
- shelf finish: chrome or white
- surface of the shelf at color variant -000 = mirror glass, at color variant -400 = white glass
- maximum flow rate at 3 bar: 15 l/min
- minimum flow pressure: 1 bar
- operating pressure: min. 1 bar/max. 10 bar
- bar width: 44 mm
- shower arm length overhead shower: 380 mm
- CoolContact thermostat: Prevents the housing from heating up, making showering even safer
- thermostat Ecostat Select
- isolated water conduction
- safety lock at 40°C
- adjustable hot water limitation
- outlets controlled via turning handle
- will not run two outlets at same time
- mounting type: exposed installation
- connection dimension DN15
- connection thread G ½
- centre distance 150 ± 12 mm
- in case of installation on existing G ¾ connections, adaptor # 02026000 must be used

Consisting of:

- **Raindance E** Overhead shower 360 1jet with ceiling connector (# 27381000)
- **Raindance Select E** Hand shower 120 3jet (# 26520XXX)
- Shower holder Porter S (# 28331000)
- **Isiflex** Shower hose 160 cm (# 28276000)

Water saving EcoSmart version:

· **Raindance E** Showerpipe 360 1jet EcoSmart 9 l/min with thermostat	Chrome	27286000	1,459.80
	White/Chrome	27286400	1,459.80

Optional parts:

· S-connections adapter G ¾ for renovation	Chrome	02026000	32.20
· Wall bar spacer for Raindance Select	Chrome	95960000	28.20

Measurements within scale drawings are in mm.

Technical specifications and units of measure are subject to change.



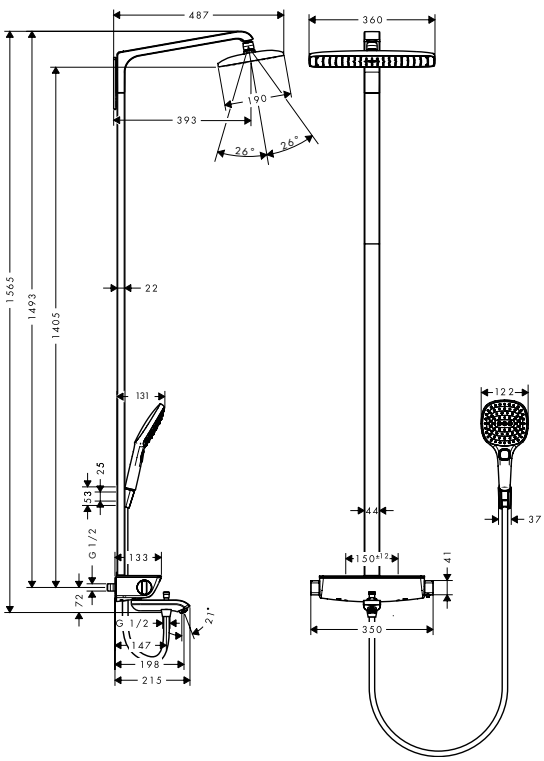

Raindance E Showerpipe 360 1jet with bath thermostat

finish	code no.	Euro
Chrome	27113000	1,590.80
White/Chrome	27113400	1,590.80

Cool Contact · Select · AirPower · Quick Clean · XXL Performance

- consists of: overhead shower, hand shower, bath thermostat, shower hose, shower holder
- overhead shower Raindance E 360 Air
- shower head size overhead shower: 360 x 190 mm
- spray type overhead shower: RainAir
- ball-joint: overhead shower angle adjustable
- spray type hand shower: RainAir, Rain, Whirl
- shelf made of safety glass
- surface of the shelf at color variant -000 = mirror glass, at color variant -400 = white glass
- maximum flow rate at 3 bar: 20 l/min
- flow rate RainAir spray (at 3 bar): 15 l/min
- flow rate bath filler: 20 l/min
- minimum flow pressure: 1,3 bar
- operating pressure: min. 1,3 bar/max. 10 bar
- bar width: 44 mm
- shower arm length overhead shower: 380 mm
- CoolContact thermostat: Prevents the housing from heating up, making showering even safer
- thermostat Ecostat Select
- isolated water conduction
- safety lock at 40°C
- adjustable hot water limitation
- outlets controlled via turning handle
- mounting type: exposed installation
- connection dimension DN15
- connection thread G ½
- centre distance 150 ± 12 mm
- intrinsically safe against backflow
- in case of installation on existing G ¾ connections, adaptor # 02026000 must be used

Consisting of:

- **Raindance Select E** Hand shower 120 3jet (# 26520XXX)
- Shower holder Porter S (# 28331000)
- **Isiflex** Shower hose 160 cm (# 28276000)

Optional parts:

· S-connections adapter G ¾ for renovation	Chrome	02026000	32.20
· Wall bar spacer for Raindance Select	Chrome	95960000	28.20

Measurements within scale drawings are in mm.

Technical specifications and units of measure are subject to change.

	finish	code no.	Euro
Raindance E Showerpipe 360 1jet with ShowerTablet Select 300	Chrome	27288000	1,733.50
	White/Chrome	27288400	1,733.50



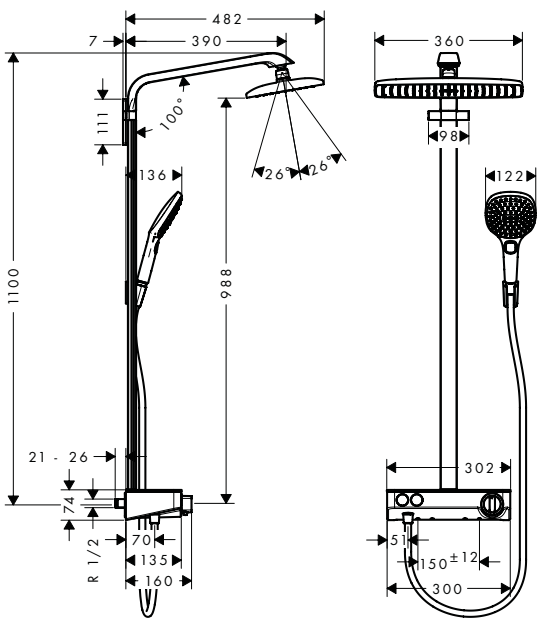

- consists of: overhead shower, hand shower, shower thermostat, shower hose, shower holder, shower bar
- overhead shower Raindance E 360 Air
- shower head size overhead shower: 360 x 190 mm
- spray type overhead shower: RainAir
- ball-joint: overhead shower angle adjustable
- spray type hand shower: RainAir, Rain, Whirl
- shelf made of safety glass
- surface of the shelf at color variant -000 = mirror glass, at color variant -400 = white glass
- maximum flow rate at 3 bar: 16,9 l/min
- minimum flow pressure: 0,08 MPa (hydrodynamic pressure)
- operating pressure: min. 0,8 bar/ max. 5 bar
- bar width: 40 mm
- shower arm length overhead shower: 380 mm
- CoolContact thermostat: Prevents the housing from heating up, making showering even safer
- thermostat ShowerTablet Select 300
- isolated water conduction
- safety lock at 40°C
- adjustable hot water limitation
- convenient diversion via Select button
- mounting type: exposed installation
- connection dimension DN15
- connection thread G ½
- centre distance 150 ± 12 mm
- in case of installation on existing G ¾ connections, adaptor # 02026000 must be used

Consisting of:

- **Raindance E** Overhead shower 360 1jet with ceiling connector (# 27381000)
- **Raindance Select E** Hand shower 120 3jet (# 26520XXX)
- Shower holder Porter S (# 28331000)
- **Isiflex** Shower hose 160 cm (# 28276000)

Optional parts:

· S-connections adapter G ¾ for renovation	Chrome	02026000	32.20



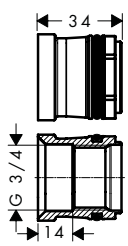

S-connections adapter G ¾ for renovation

Chrome	02026000	32.20

- installation type: exposed installation
- adapter for installation on existing s-unions G ½ x G ¾
- connection dimension G ¾



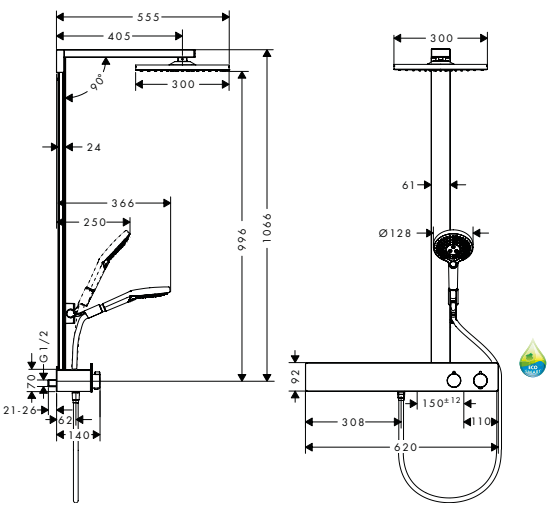

	finish	code no.	Euro
Raindance E Showerpipe 300 1jet with ShowerTablet 600	Chrome	27363000	1,667.40

- consists of: overhead shower, hand shower, shower thermostat, shower hose, slider, shower bar
- overhead shower Raindance E 300 Air 1jet
- shower head size overhead shower: 300 x 300 mm
- spray type overhead shower: RainAir
- ball-joint: overhead shower angle adjustable
- 90° position adjustable hand shower holder, pivots left and right, up and down
- spray type hand shower: Rain, RainAir, Whirl
- shelf finish: aluminium anodized
- maximum flow rate at 3 bar: 16 l/min
- minimum flow pressure: 1,5 bar
- operating pressure: min. 1,5 bar/max. 10 bar
- bar width: 61 mm
- shower arm length overhead shower: 405 mm
- CoolContact thermostat: Prevents the housing from heating up, making showering even safer
- thermostat ShowerTablet 600
- isolated water conduction
- safety lock at 40°C
- outlets controlled via turning handle
- will not run two outlets at same time
- mounting type: exposed installation
- connection dimension DN15
- connection thread G ½
- centre distance 150 ± 12 mm

Consisting of:
- **Raindance Select S** Hand shower 120 3jet (# 26530000)
- **Isiflex** Shower hose 160 cm (# 28276000)

Water saving EcoSmart version:			
Raindance E Showerpipe 300 1jet EcoSmart 9 l/min with ShowerTablet 600	Chrome	27364000	1,667.40
Optional parts:			
Casetta Soap dish/ shelf E	Chrome	26511000	68.50

Measurements within scale drawings are in mm.

Technical specifications and units of measure are subject to change.



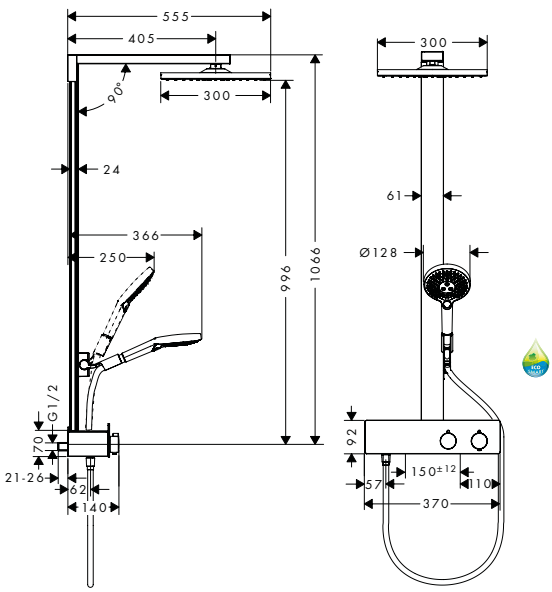

	finish	code no.	Euro
Raindance E Showerpipe 300 1jet with ShowerTablet 350	Chrome	27361000	1,427.60

· consists of: overhead shower, hand shower, shower thermostat, shower hose, slider, shower bar
· overhead shower Raindance E 300 Air 1jet
· shower head size overhead shower: 300 x 300 mm
· spray type overhead shower: RainAir
· ball-joint: overhead shower angle adjustable
· 90° position adjustable hand shower holder, pivots left and right, up and down
· spray type hand shower: RainAir, Rain, Whirl
· shelf finish: aluminium anodized
· maximum flow rate at 3 bar: 16 l/min
· minimum flow pressure: 1,5 bar
· operating pressure: min. 1,5 bar/max. 10 bar
· bar width: 61 mm
· shower arm length overhead shower: 405 mm
· CoolContact thermostat: Prevents the housing from heating up, making showering even safer
· thermostat ShowerTablet 350
· isolated water conduction
· safety lock at 40°C
· outlets controlled via turning handle
· will not run two outlets at same time
· mounting type: exposed installation
· connection dimension DN15
· connection thread G ½
· centre distance 150 ± 12 mm

Consisting of:
· **Raindance Select S** Hand shower 120 3jet (# 26530000)
· **Isiflex** Shower hose 160 cm (# 28276000)

Water saving EcoSmart version:

· **Raindance E** Showerpipe 300 1jet EcoSmart 9 l/min with ShowerTablet 350	Chrome	27362000	1,427.60

Optional parts:

· **Casetta** Soap dish/ shelf E	Chrome	26511000	68.50

Measurements within scale drawings are in mm.

Raindance Select S Showerpipes



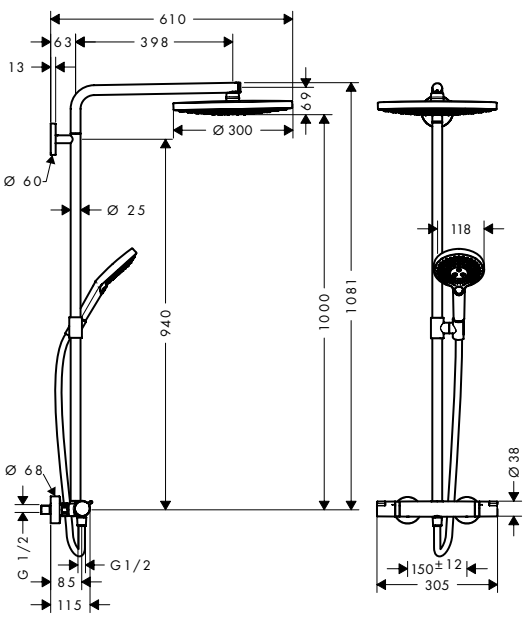

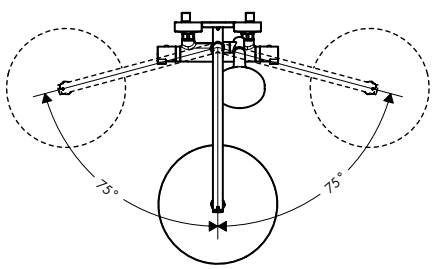

	finish	code no.	Euro
Raindance Select S Showerpipe 300 2jet with thermostat	Chrome	27133000	1,279.90
	White/Chrome	27133400	1,279.90

Select · AirPower · Quick Clean · XXL Performance

- consists of: overhead shower, hand shower, shower thermostat, shower hose, slider, shower bar
- overhead shower Raindance Select S 300 2jet
- shower head size overhead shower: 300 mm
- spray type overhead shower: RainAir, Rain
- convenient diversion via Select button
- spray disc surface in two variants: chrome or white
- spray type hand shower: RainAir, Rain, Whirl
- maximum flow rate at 3 bar: 15 l/min
- minimum flow pressure: 1 bar
- operating pressure: min. 1 bar/max. 10 bar
- pipe can be shortened in height
- shower bar diameter: 25 mm
- height-adjustable hand shower holder
- shower arm length overhead shower: 460 mm
- swivel shower arm
- thermostat Ecostat Comfort
- safety lock at 40°C
- adjustable hot water limitation
- outlets controlled via turning handle
- suitable for continuous flow water heaters
- mounting type: exposed installation
- connection dimension DN15
- connection thread G ½
- centre distance 150 ± 12 mm

Consisting of:

- **Raindance Select S** Hand shower 120 3jet (# 26530XXX)
- **Isiflex** Shower hose 160 cm (# 28276000)

Optional parts:

· Wall bar spacer for Croma 100 Showerpipe	Chrome	95239000	10.90

Measurements within scale drawings are in mm.

Technical specifications and units of measure are subject to change.



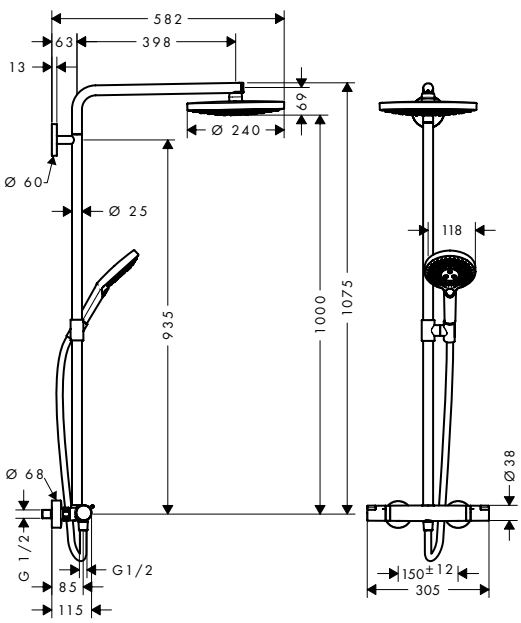

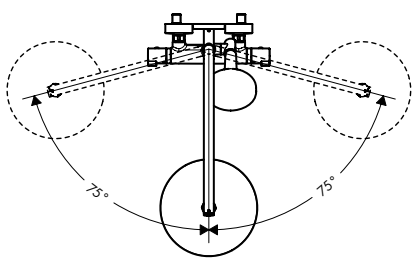

Raindance Select S

Showerpipe 240 2jet
with thermostat

- consists of: overhead shower, hand shower, shower thermostat, shower hose, slider, shower bar
- overhead shower Raindance Select S 240 2jet
- shower head size overhead shower: 240 mm
- spray type overhead shower: RainAir, Rain
- convenient diversion via Select button
- spray disc surface in two variants: chrome or white
- spray type hand shower: RainAir, Rain, Whirl
- maximum flow rate at 3 bar: 15 l/min
- minimum flow pressure: 1 bar
- operating pressure: min. 1 bar/max. 10 bar
- pipe can be shortened in height
- shower bar diameter: 25 mm
- height-adjustable hand shower holder
- shower arm length overhead shower: 398 mm
- swivel shower arm
- thermostat Ecostat Comfort
- safety lock at 40°C
- adjustable hot water limitation
- outlets controlled via turning handle
- suitable for continuous flow water heaters
- mounting type: exposed installation
- connection dimension DN15
- connection thread G ½
- centre distance 150 ± 12 mm

Consisting of:

- **Raindance Select S** Hand shower 120 3jet (# 26530XXX)
- **Isiflex** Shower hose 160 cm (# 28276000)

finish	code no.	Euro
Chrome	27129000	1,077.80
White/Chrome	27129400	1,077.80

Select · AirPower · Quick Clean · XXL Performance

Optional parts:

· Wall bar spacer for Croma 100 Showerpipe	Chrome	95239000	10.90

Measurements within scale drawings are in mm.

Technical specifications and units of measure are subject to change.



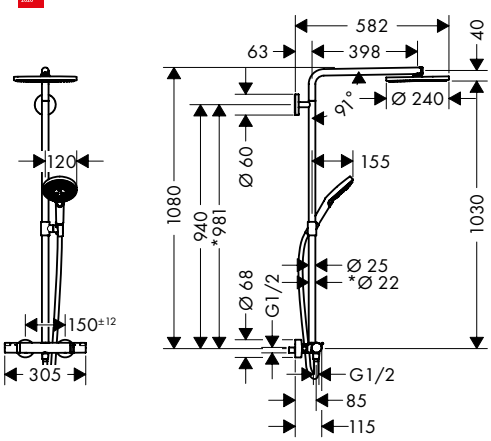

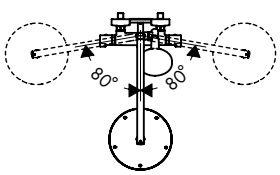

Raindance Select S

Showerpipe 240 1jet
PowderRain with thermostat

- consists of: overhead shower, hand shower, shower thermostat, shower hose, slider, shower bar
- overhead shower Raindance S240 P
- shower head size overhead shower: 240 mm
- spray type overhead shower: PowderRain
- spray type hand shower: Rain, PowderRain, Whirl
- maximum flow rate at 3 bar: 16 l/ min
- flow rate PowderRain spray (at 3 bar): 16 l/ min
- minimum flow pressure: 1,5 bar
- operating pressure: min. 1 bar/ max. 10 bar
- pipe can be shortened in height
- shower bar diameter: 25 mm, for surfaces 670 and 700: 22 mm
- height-adjustable hand shower holder
- shower arm length overhead shower: 460 mm
- swivel shower arm
- thermostat Ecostat Comfort
- safety lock at 40 °C
- adjustable hot water limitation
- outlets controlled via turning handle
- mounting type: exposed installation
- connection dimension DN15
- connection thread G ½
- centre distance 150 ± 12 mm

Consisting of:

- **Raindance Select S** Hand shower 120 3jet PowderRain (# 26014XXX)
- **Isiflex** Shower hose 160 cm (# 28276XXX)

Optional parts:

- Wall bar spacer for Croma 100 Showerpipe

finish	code no.	Euro
Chrome	27633000	987.90
Brushed Bronze	27633140	1,481.90
Brushed Black Chrome	27633340	1,481.90
Matt Black	27633670	1,383.00
Matt White	27633700	1,383.00
Polished Gold Optic	27633990	1,481.90
Chrome	95239000	10.90

Select · Quick Clean · XXL Performance

Measurements within scale drawings are in mm.

Technical specifications and units of measure are subject to change.

Raindance S Showerpipes



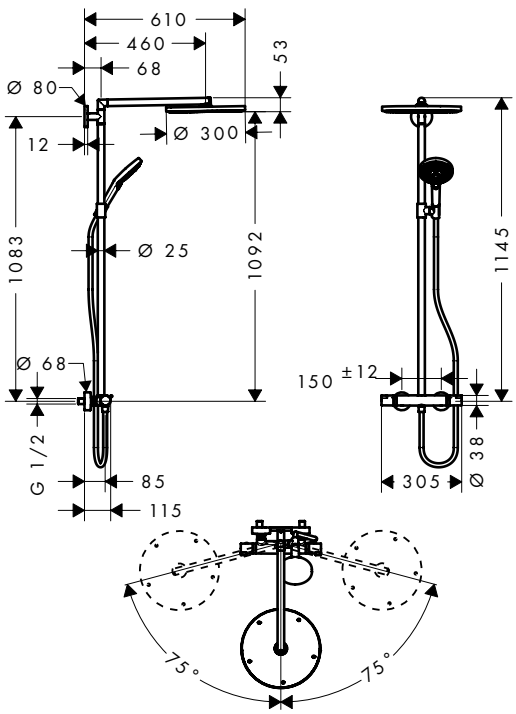

	finish	code no.	Euro
Raindance S Showerpipe 300 1jet with thermostat	Chrome	27114000	1,116.20

Select · AirPower · Quick Clean · XXL Performance

- consists of: overhead shower, hand shower, shower thermostat, shower hose, slider, shower bar
- overhead shower Raindance S 300 Air
- shower head size overhead shower: 300 mm
- spray type overhead shower: RainAir
- fully chrome-plated spray disc
- spray type hand shower: Rain, RainAir, Whirl
- maximum flow rate at 3 bar: 16 l/ min
- minimum flow pressure: 2 bar
- operating pressure: min. 2 bar/ max. 10 bar
- pipe can be shortened in height
- shower bar diameter: 25 mm
- height-adjustable hand shower holder
- shower arm length overhead shower: 460 mm
- swivel shower arm
- thermostat Ecostat Comfort
- safety lock at 40°C
- adjustable hot water limitation
- outlets controlled via turning handle
- suitable for continuous flow water heaters
- mounting type: exposed installation
- connection dimension DN15
- connection thread G ½
- centre distance 150 ± 12 mm

Consisting of:

- **Raindance Select S** Hand shower 120 3jet (# 26530000)
- **Isiflex** Shower hose 160 cm (# 28276000)

Optional parts:

· Wall bar spacer	Chrome	98681000	14.40

Measurements within scale drawings are in mm.

Technical specifications and units of measure are subject to change.



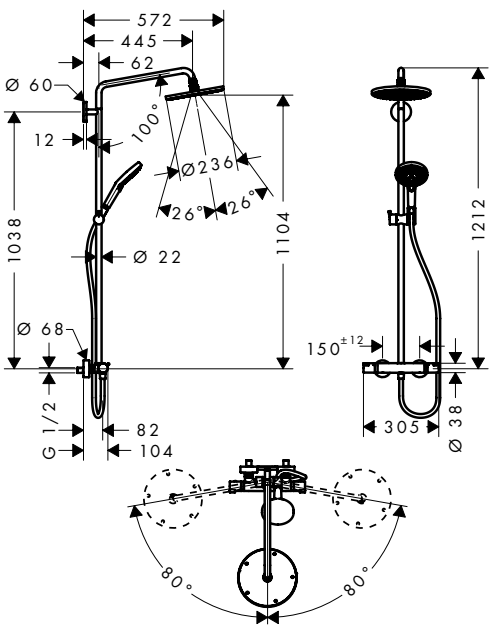

	finish	code no.	Euro
Raindance S Showerpipe 240 1jet with thermostat	Chrome	27115000	893.10

Select · AirPower · Quick Clean · XXL Performance

- consists of: overhead shower, hand shower, shower thermostat, shower hose, slider, shower bar
- overhead shower Raindance S 240 Air
- shower head size overhead shower: 236 mm
- spray type overhead shower: RainAir
- ball-joint: overhead shower angle adjustable
- spray type hand shower: RainAir, Rain, Whirl
- maximum flow rate at 3 bar: 16 l/min
- flow rate RainAir spray (at 3 bar): 16 l/min
- minimum flow pressure: 1 bar
- operating pressure: min. 1 bar/max. 10 bar
- pipe can be shortened in height
- shower bar diameter: 22 mm
- height-adjustable hand shower holder
- shower arm length overhead shower: 460 mm
- swivel shower arm
- thermostat Ecostat Comfort
- safety lock at 40°C
- adjustable hot water limitation
- outlets controlled via turning handle
- will not run two outlets at same time
- mounting type: exposed installation
- connection dimension DN15
- connection thread G ½
- centre distance 150 ± 12 mm

Consisting of:

- **Raindance Select S** Hand shower 120 3jet (# 26530000)
- **Isiflex** Shower hose 160 cm (# 28276000)

Water saving EcoSmart version:

Raindance S Showerpipe 240 1jet EcoSmart 9 l/min with thermostat	Chrome	27116000	893.10

Optional parts:

Wall bar spacer for Croma 100 Showerpipe	Chrome	95239000	10.90

Measurements within scale drawings are in mm.

Technical specifications and units of measure are subject to change.



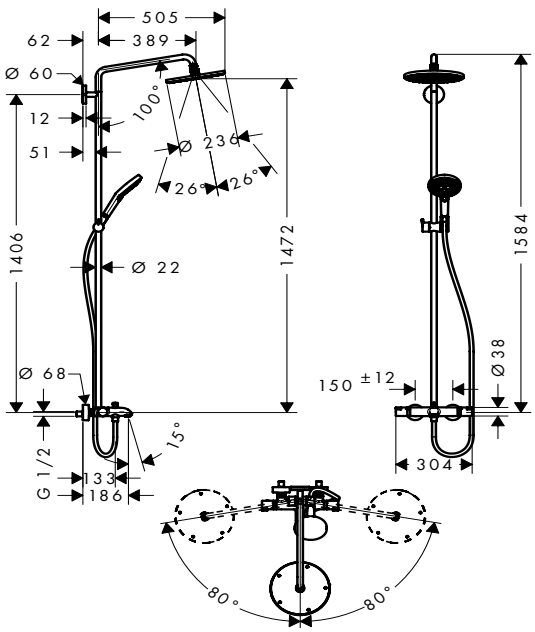

	finish	code no.	Euro
Raindance S Showerpipe 240 1jet with bath thermostat	Chrome	27117000	1,130.00

Select · AirPower · Quick Clean · XXL Performance

- consists of: overhead shower, hand shower, bath thermostat, shower hose, slider, shower bar
- overhead shower Raindance S 240 Air
- shower head size overhead shower: 236 mm
- spray type overhead shower: RainAir
- ball-joint: overhead shower angle adjustable
- fully chrome-plated spray disc
- spray type hand shower: Rain, RainAir, Whirl
- flow rate RainAir spray (at 3 bar): 17 l/min
- flow rate bath filler: 20 l/min
- minimum flow pressure: 1 bar
- operating pressure: min. 1 bar/max. 10 bar
- pipe can be shortened in height
- shower bar diameter: 22 mm
- height-adjustable hand shower holder
- shower arm length overhead shower: 460 mm
- swivel shower arm
- thermostat Ecostat Comfort
- safety lock at 40°C
- adjustable hot water limitation
- outlets controlled via turning handle
- mounting type: exposed installation
- connection dimension DN15
- connection thread G ½
- centre distance 150 ± 12 mm

Consisting of:

- **Raindance Select S** Hand shower 120 3jet (# 26530000)
- **Isiflex** Shower hose 200 cm (# 28274000)

Optional parts:

· Wall bar spacer for Croma 100 Showerpipe	Chrome	95239000	10.90

Measurements within scale drawings are in mm.

Technical specifications and units of measure are subject to change.

Pulsify S Showerpipes

NEW



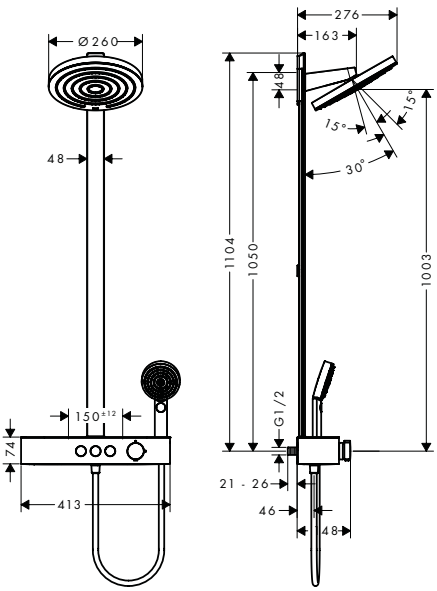

Pulsify S Showerpipe 260 2jet with ShowerTablet Select 400

finish	code no.	Euro
Chrome	24240000	840.00
Matt Black	24240670	1,092.00
Matt White	24240700	1,092.00

Fast Drain · Water Flow Control · Cool Contact · Select · Quick Clean · XXL Performance

available from January 2023

- consists of: overhead shower, hand shower, shower thermostat, shower bar, shower hose
- overhead shower Pulsify 260 2jet
- shower head size overhead shower: 260 mm
- spray type overhead shower: PowderRain, Intense PowderRain
- ball-joint: overhead shower inclinable by 10-30°
- spray disc surface: graphite
- spray type hand shower: PowderRain, IntenseRain, Massage spray
- Fast Drain empties the overhead shower from an angle of 10°
- removable shower head
- shelf made of plastic
- maximum flow rate at 3 bar: 12,9 l/min
- minimum flow pressure: 1,3 bar
- pipe can be shortened in height
- shower arm length overhead shower: 163 mm
- CoolContact thermostat: Prevents the housing from heating up, making showering even safer
- thermostat ShowerTablet Select 400
- simultaneous utilization of 3 functions
- mounting type: exposed installation
- centre distance 150 ± 12 mm
- Thermostat is delivered with buttons hand shower, PowderRain, Intense PowderRain
- Eco-Function: the volume control regulates up to 30% of the water flow

Consisting of:

NEW
- **Pulsify S** Overhead shower 260 2jet with wall connector (# 24150XXX)

NEW
- **Pulsify Select S** Hand shower 105 3jet Relaxation (# 24110XXX)
- **Isiflex** Shower hose 160 cm (# 28276XXX)

Water saving EcoSmart version:

NEW
- **Pulsify S** Showerpipe 260 2jet EcoSmart with ShowerTablet Select 400

Chrome	24241000	840.00
Matt Black	24241670	1,092.00
Matt White	24241700	1,092.00

Measurements within scale drawings are in mm.

Technical specifications and units of measure are subject to change.

	finish	code no.	Euro
Pulsify S Showerpipe 260 1jet with ShowerTablet Select 400	Chrome	24220000	740.00

Push slider · Fast Drain · Water Flow Control · Cool Contact · Select · Quick Clean · XXL Performance

available from January 2023



- consists of: overhead shower, hand shower, shower thermostat, shower bar, slider, shower hose
- overhead shower Pulsify 260 1jet
- shower head size overhead shower: 260 mm
- spray type overhead shower: PowderRain
- ball-joint: overhead shower angle adjustable
- spray type hand shower: PowderRain, IntenseRain, Massage spray
- Fast Drain empties the overhead shower from an angle of 10°
- removable shower head
- shelf made of plastic
- maximum flow rate at 3 bar: 10,9 l/min
- minimum flow pressure: 1,2 bar
- pipe can be shortened in height
- height-adjustable slider with locking push-button slider
- shower arm length overhead shower: 398 mm
- swivel shower arm
- CoolContact thermostat: Prevents the housing from heating up, making showering even safer
- thermostat ShowerTablet Select 400
- safety lock at 40°C
- convenient diversion via Select button
- simultaneous utilization of 2 functions
- mounting type: exposed installation
- centre distance 150 ± 12 mm
- Thermostat is delivered with buttons hand shower and overhead shower
- Eco-Function: the volume control regulates up to 30% of the water flow

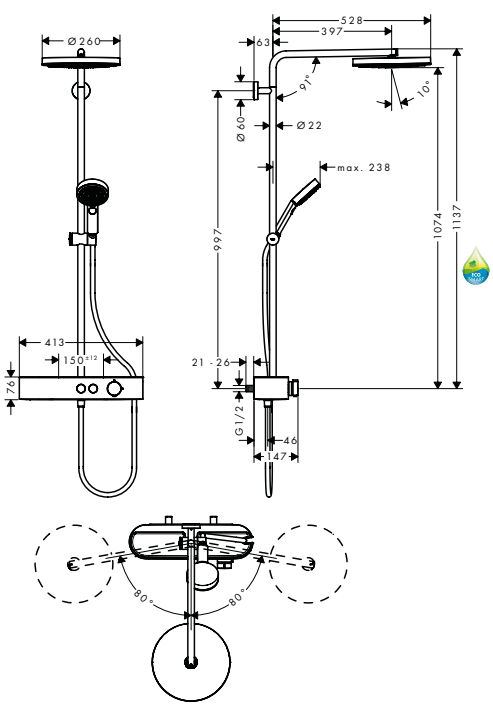

Consisting of:

- **Pulsify S** Overhead shower 260 1jet (# 24140000)
- **Pulsify Select S** Hand shower 105 3jet Relaxation (# 24110000)
- **Isiflex** Shower hose 160 cm (# 28276XXX)

Water saving EcoSmart version:

Pulsify S Showerpipe 260 1jet EcoSmart with ShowerTablet Select 400	Chrome	24221000	740.00

NEW



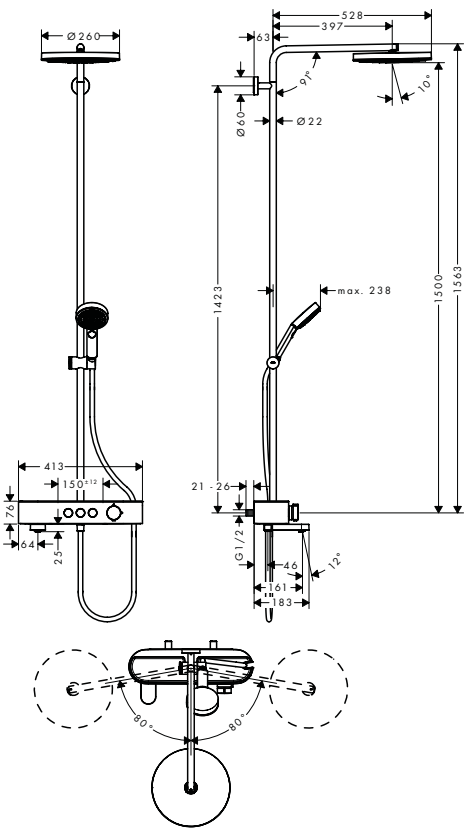

Pulsify S Showerpipe 260 1jet with bath thermostat ShowerTablet 400

finish	code no.	Euro
Chrome	24230000	795.00

Push slider · Rotatable Bath Spout · Fast Drain · Water Flow Control · Cool Contact · Select · Quick Clean · XXL Performance

available from January 2023

- consists of: overhead shower, hand shower, bath thermostat, shower bar, slider, shower hose
- overhead shower Pulsify 260 1jet
- shower head size overhead shower: 260 mm
- spray type overhead shower: PowderRain
- ball-joint: overhead shower angle adjustable
- spray type hand shower: PowderRain, IntenseRain, Massage spray
- Fast Drain empties the overhead shower from an angle of 10°
- removable shower head
- shelf made of plastic
- pipe can be shortened in height
- height-adjustable slider with locking push-button slider
- shower arm length overhead shower: 398 mm
- swivel shower arm
- CoolContact thermostat: Prevents the housing from heating up, making showering even safer
- thermostat ShowerTablet Select 400
- safety lock at 40°C
- convenient diversion via Select button
- simultaneous utilization of 3 functions
- mounting type: exposed installation
- centre distance 150 ± 12 mm
- Thermostat is delivered with buttons overhead shower, bath tub and hand shower
- Eco-Function: the volume control regulates up to 30% of the water flow

Consisting of:

NEW
- **Pulsify S** Overhead shower 260 1jet (# 24140000)

NEW
- **Isiflex** Shower hose 160 cm (# 28276XXX)

Measurements within scale drawings are in mm.

Technical specifications and units of measure are subject to change.

Croma Select S Showerpipes



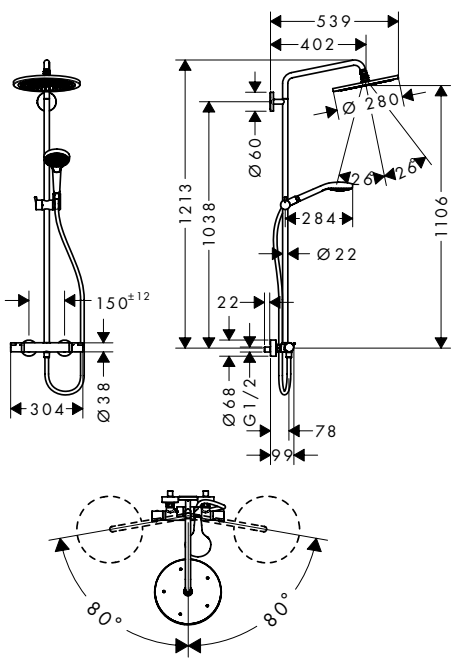

	finish	code no.	Euro
Croma Select S Showerpipe 280 1jet with thermostat	Chrome	26790000	802.90

AirPower · Quick Clean · XXL Performance

- consists of: overhead shower, hand shower, shower thermostat, shower hose, slider, shower bar
- overhead shower Croma 280
- shower head size overhead shower: 280 mm
- spray type overhead shower: RainAir
- ball-joint: overhead shower angle adjustable
- spray type hand shower: Massage spray, IntenseRain, SoftRain
- maximum flow rate at 3 bar: 16 l/ min
- flow rate RainAir spray (at 3 bar): 16 l/ min
- minimum flow pressure: 1 bar
- operating pressure: min. 1 bar/ max. 10 bar
- pipe can be shortened in height
- shower bar diameter: 22 mm
- height-adjustable hand shower holder
- shower arm length overhead shower: 400 mm
- swivel shower arm
- thermostat Ecostat Comfort
- safety lock at 40 °C
- adjustable hot water limitation
- outlets controlled via turning handle
- suitable for continuous flow water heaters
- mounting type: exposed installation
- connection dimension DN15
- connection thread G ½
- centre distance 150 ± 12 mm

Consisting of:

- **Croma** Overhead shower 280 1jet (# 26220000)
- **Croma Select S** Hand shower Multi (# 26800400)
- **Isiflex** Shower hose 160 cm (# 28276000)

Water saving EcoSmart version:

Croma Select S Showerpipe 280 1jet EcoSmart 9 l/ min with thermostat	Chrome	26794000	805.00

Optional parts:

Wall bar spacer for Croma 100 Showerpipe	Chrome	95239000	10.90

Measurements within scale drawings are in mm.



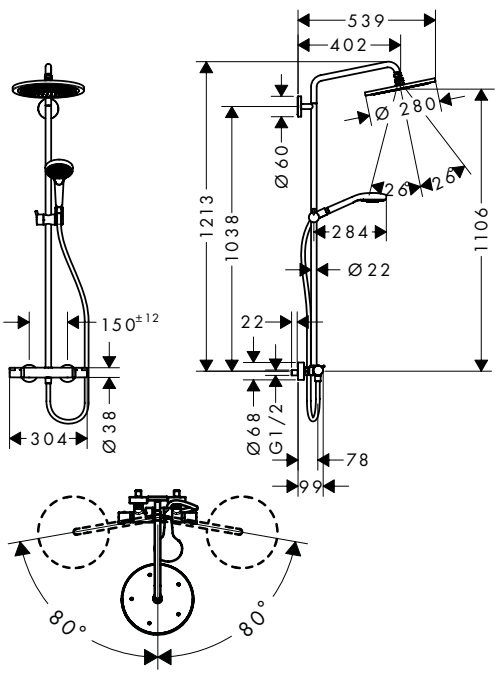

Croma Select S Showerpipe 280 1jet with thermostat and hand shower Raindance Select S 120 3jet

- consists of: overhead shower, hand shower, shower thermostat, shower hose, slider, shower bar
- overhead shower Croma 280
- shower head size overhead shower: 280 mm
- spray type overhead shower: RainAir
- ball-joint: overhead shower angle adjustable
- spray type hand shower: RainAir, Rain, Whirl
- maximum flow rate at 3 bar: 15 l/min
- flow rate RainAir spray (at 3 bar): 15 l/min
- flow rate Rain spray (at 3 bar): 11 l/min
- minimum flow pressure: 1 bar
- operating pressure: min. 1 bar/max. 10 bar
- pipe can be shortened in height
- shower bar diameter: 22 mm
- height-adjustable hand shower holder
- shower arm length overhead shower: 400 mm
- swivel shower arm
- thermostat Ecostat Comfort
- safety lock at 40°C
- adjustable hot water limitation
- outlets controlled via turning handle
- suitable for continuous flow water heaters
- mounting type: exposed installation
- connection dimension DN15
- connection thread G ½
- centre distance 150 ± 12 mm

Consisting of:

- **Croma** Overhead shower 280 1jet (# 26220XXX)
- **Raindance Select S** Hand shower 120 3jet (# 26530XXX)
- **Isiflex** Shower hose 160 cm (# 28276XXX)

finish	code no.	Euro
Brushed Bronze	26890140	1,259.50
Brushed Black Chrome	26890340	1,259.50
Matt Black	26890670	1,176.00
Matt White	26890700	1,176.00
Polished Gold Optic	26890990	1,259.50

Water saving EcoSmart version:

- **Croma Select S** Showerpipe 280 1jet EcoSmart 9 l/min with thermostat and hand shower Raindance Select S 120 3jet

Brushed Bronze	26891140	1,262.70
Brushed Black Chrome	26891340	1,262.70
Matt Black	26891670	1,179.20
Matt White	26891700	1,179.20
Polished Gold Optic	26891990	1,262.70

Optional parts:

- Wall bar spacer for Croma 100 Showerpipe

Chrome	95239000	10.90

Measurements within scale drawings are in mm.

Technical specifications and units of measure are subject to change.

	finish	code no.	Euro
Croma Select S Showerpipe 280 1jet with bath thermostat	Chrome	26792000	977.30



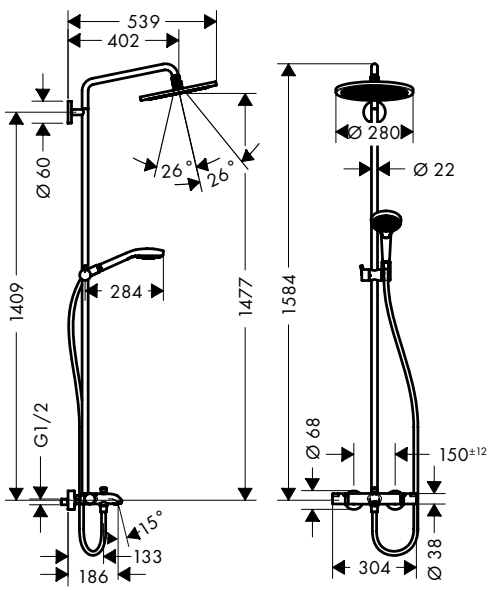

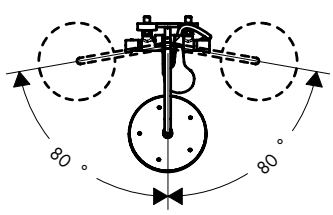

- consists of: overhead shower, hand shower, bath thermostat, shower hose, slider, shower bar
- overhead shower Croma 280
- shower head size overhead shower: 280 mm
- spray type overhead shower: RainAir
- ball-joint: overhead shower angle adjustable
- fully chrome-plated spray disc
- spray type hand shower: Massage spray, IntenseRain, SoftRain
- flow rate RainAir spray (at 3 bar): 16 l/min
- flow rate bath filler: 20 l/min
- minimum flow pressure: 1 bar
- operating pressure: min. 1 bar/max. 10 bar
- pipe can be shortened in height
- shower bar diameter: 22 mm
- height-adjustable hand shower holder
- swivel shower arm
- thermostat Ecostat Comfort
- safety lock at 40°C
- adjustable hot water limitation
- outlets controlled via turning handle
- mounting type: exposed installation
- connection dimension DN15
- connection thread G ½
- centre distance 150 ± 12 mm

Consisting of:

- **Croma** Overhead shower 280 1jet (# 26220000)
- **Croma Select S** Hand shower Multi (# 26800400)
- **Isiflex** Shower hose 200 cm (# 28274000)

Optional parts:

· Wall bar spacer for Croma 100 Showerpipe	Chrome	95239000	10.90

Measurements within scale drawings are in mm.



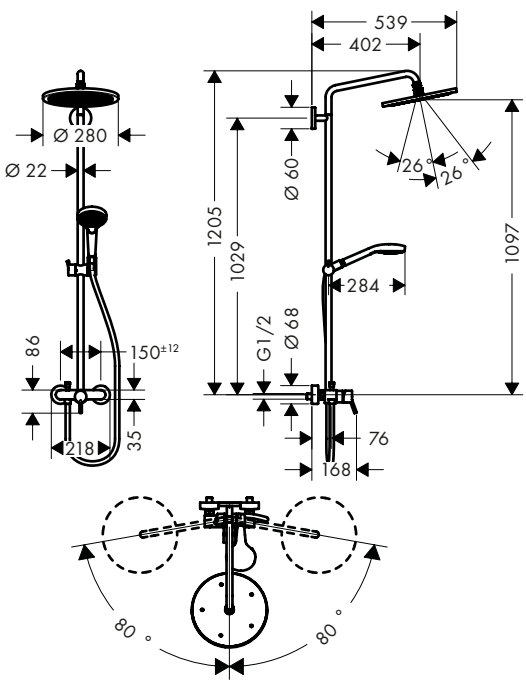

	finish	code no.	Euro
Croma Select S Showerpipe 280 1jet with single lever mixer	Chrome	26791000	767.90

AirPower · Quick Clean · XXL Performance

- consists of: overhead shower, hand shower, single lever shower mixer, shower hose, hand shower holder, shower bar
- overhead shower Croma 280
- shower head size overhead shower: 280 mm
- spray type overhead shower: RainAir
- ball-joint: overhead shower angle adjustable
- maximum flow rate at 3 bar: 15 l/min
- flow rate RainAir spray (at 3 bar): 15 l/min
- minimum flow pressure: 1 bar
- operating pressure: min. 1 bar/max. 10 bar
- pipe can be shortened in height
- shower bar diameter: 22 mm
- height-adjustable hand shower holder
- shower arm length overhead shower: 400 mm
- swivelling shower arm
- mounting type: exposed installation
- connection dimension DN15
- connection thread G ½
- centre distance 150 ± 12 mm
- ceramic cartridge
- temperature limitation adjustable

Consisting of:

- **Croma** Overhead shower 280 1jet (# 26220000)
- **Croma Select S** Hand shower Multi (# 26800400)
- **Isiflex** Shower hose 160 cm (# 28276000)

Optional parts:

· Wall bar spacer for Croma 100 Showerpipe	Chrome	95239000	10.90

Measurements within scale drawings are in mm.

Technical specifications and units of measure are subject to change.

	finish	code no.	Euro
Croma Select S Showerpipe 280 1jet Reno	Chrome	26793000	721.40



- consists of: overhead shower, hand shower, shower hose, hand shower holder, shower bar
- overhead shower Croma 280
- shower head size overhead shower: 280 mm
- spray type overhead shower: RainAir
- ball-joint: overhead shower angle adjustable
- spray type hand shower: Massage spray, IntenseRain, SoftRain
- flow rate RainAir spray (at 3 bar): 10 l/ min
- minimum flow pressure: 1,5 bar
- operating pressure: min. 1,5 bar/ max. 10 bar
- mounting type: exposed installation
- pipe can be shortened in height
- shower bar diameter: 22 mm
- height-adjustable hand shower holder
- shower arm length: 400 mm
- swivelling shower arm
- water connection: Isiflex shower hose 80 cm
- connection dimension: DN15
- connection thread G ½

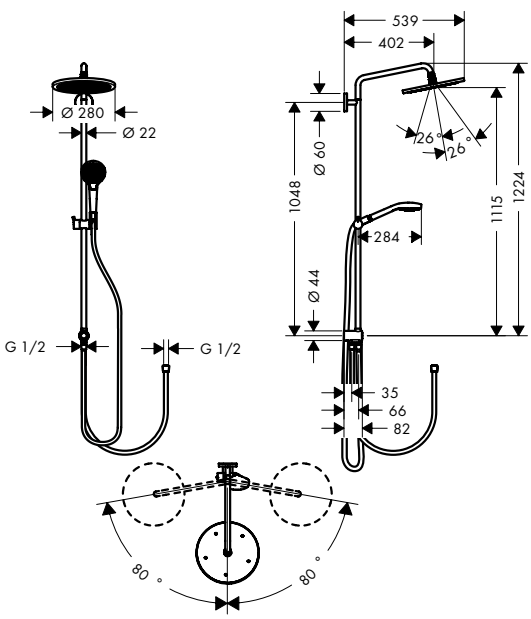

Consisting of:

- **Croma** Overhead shower 280 1jet (# 26220000)
- **Croma Select S** Hand shower Multi (# 26800400)
- **Isiflex** Shower hose 160 cm (# 28276000)
- **Isiflex** Shower hose B 80 cm (# 28278000)

Optional parts:

· Wall bar spacer for Croma 100 Showerpipe	Chrome	95239000	10.90

Measurements within scale drawings are in mm.



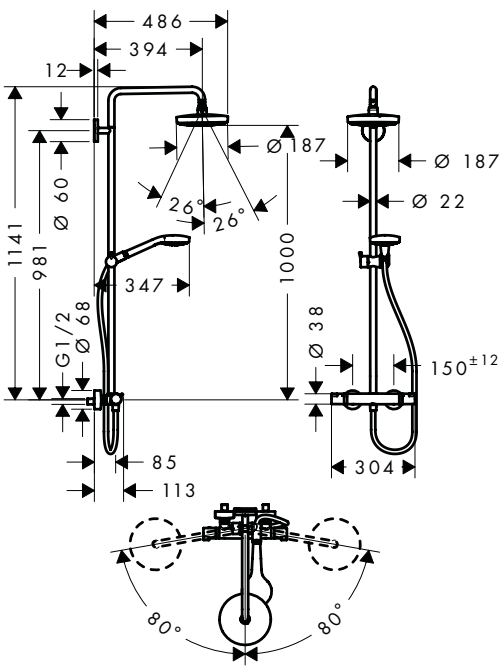

	finish	code no.	Euro
Croma Select S Showerpipe 180 2jet with thermostat	White/Chrome	27253400	719.00

Select · Quick Clean · XXL Performance

- consists of: overhead shower, hand shower, shower thermostat, shower hose, slider, shower bar
- overhead shower Croma Select S 180 2jet
- shower head size overhead shower: 180 mm
- spray type overhead shower: Rain, IntenseRain
- convenient diversion via Select button
- ball-joint: overhead shower angle adjustable
- spray type hand shower: Massage spray, IntenseRain, SoftRain
- flow rate IntenseRain spray (at 3 bar): 16 l/min
- flow rate Rain spray (at 3 bar): 16 l/min
- minimum flow pressure: 1 bar
- operating pressure: min. 1,1 bar/max. 10 bar
- pipe can be shortened in height
- shower bar diameter: 22 mm
- height-adjustable hand shower holder
- shower arm length overhead shower: 400 mm
- swivel shower arm
- thermostat Ecostat Comfort
- safety lock at 40°C
- adjustable hot water limitation
- outlets controlled via turning handle
- mounting type: exposed installation
- connection dimension DN15
- connection thread G ½
- centre distance 150 ± 12 mm

Consisting of:

- **Croma Select S** Overhead shower 180 2jet (# 26522400)
- **Croma Select S** Hand shower Multi (# 26800400)
- **Isiflex** Shower hose 160 cm (# 28276000)

Water saving EcoSmart version:			
· **Croma Select S** Showerpipe 180 2jet EcoSmart 9 l/min with thermostat	White/Chrome	27254400	719.00
Optional parts:			
· Wall bar spacer for Croma 100 Showerpipe	Chrome	95239000	10.90

Measurements within scale drawings are in mm.

Technical specifications and units of measure are subject to change.

	finish	code no.	Euro
Croma Select S Showerpipe 180 2jet with bath thermostat	White/Chrome	27351400	908.10



- consists of: overhead shower, hand shower, bath thermostat, shower hose, slider, shower bar
- overhead shower Croma Select S 180 2jet
- shower head size overhead shower: 180 mm
- spray type overhead shower: Rain, IntenseRain
- convenient diversion via Select button
- ball-joint: overhead shower angle adjustable
- spray type hand shower: Massage spray, IntenseRain, SoftRain
- flow rate IntenseRain spray (at 3 bar): 17 l/ min
- flow rate Rain spray (at 3 bar): 17 l/ min
- flow rate bath filler: 20 l/ min
- minimum flow pressure: 1 bar
- operating pressure: min. 1 bar/ max. 10 bar
- pipe can be shortened in height
- shower bar diameter: 22 mm
- height-adjustable hand shower holder
- swivel shower arm
- thermostat Ecostat Comfort
- safety lock at 40°C
- adjustable hot water limitation
- outlets controlled via turning handle
- mounting type: exposed installation
- connection dimension DN15
- connection thread G ½
- centre distance 150 ± 12 mm

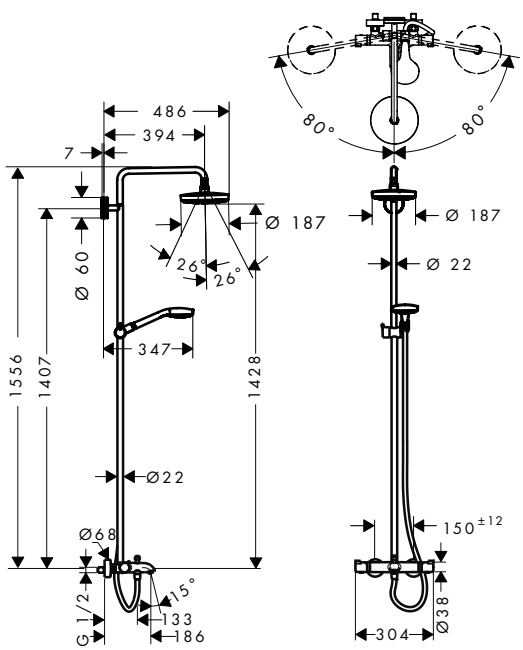

Consisting of:

- **Croma Select S** Overhead shower 180 2jet (# 26522400)
- **Croma Select S** Hand shower Multi (# 26800400)
- **Isiflex** Shower hose 200 cm (# 28274000)

Optional parts:

· Wall bar spacer for Croma 100 Showerpipe	Chrome	95239000	10.90

Measurements within scale drawings are in mm.

Technical specifications and units of measure are subject to change.

	finish	code no.	Euro
Croma Select S Showerpipe 180 2jet with single lever mixer	White/Chrome	27255400	681.10



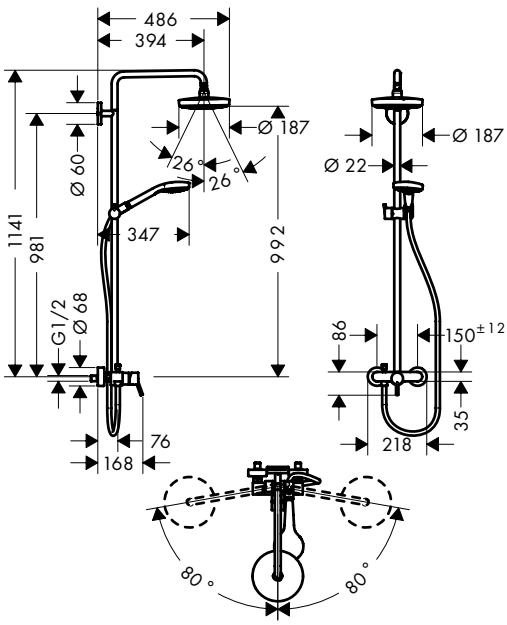

- consists of: overhead shower, hand shower, single lever shower mixer, shower hose, hand shower holder, shower bar
- overhead shower Croma Select S 180 2jet
- shower head size overhead shower: 180 mm
- spray type overhead shower: Rain, IntenseRain
- convenient diversion via Select button
- ball-joint: overhead shower angle adjustable
- spray type hand shower: Massage spray, IntenseRain, SoftRain
- flow rate IntenseRain spray (at 3 bar): 16 l/min
- flow rate Rain spray (at 3 bar): 16 l/min
- minimum flow pressure: 1 bar
- operating pressure: min. 1,5 bar/max. 10 bar
- shower bar diameter: 22 mm
- height-adjustable hand shower holder
- shower arm length overhead shower: 400 mm
- swivelling shower arm
- mounting type: exposed installation
- connection dimension DN15
- connection thread G ½
- centre distance 150 ± 12 mm
- ceramic cartridge
- temperature limitation adjustable

Consisting of:

- **Croma Select S** Overhead shower 180 2jet (# 26522400)
- **Croma Select S** Hand shower Multi (# 26800400)
- **Isiflex** Shower hose 160 cm (# 28276000)

Optional parts:

· Wall bar spacer for Croma 100 Showerpipe	Chrome	95239000	10.90

Measurements within scale drawings are in mm.

Technical specifications and units of measure are subject to change.

	finish	code no.	Euro
Croma Select S SemiPipe Multi with thermostat	White/Chrome	27247400	353.10



- consists of: hand shower, shower thermostat, shower hose, slider, shower bar
- spray type hand shower: Massage spray, IntenseRain, SoftRain
- wallbar could be also used as grab bar
- maximum flow rate at 3 bar: 16 l/min
- minimum flow pressure: 1 bar
- operating pressure: min. 1 bar/max. 10 bar
- wall bar: 900 mm
- shower bar diameter: 25 mm
- height-adjustable hand shower holder
- thermostat Ecostat Comfort
- safety lock at 40°C
- adjustable hot water limitation
- outlets controlled via turning handle
- mounting type: exposed installation
- connection dimension DN15
- connection thread G ½
- centre distance 150 ± 12 mm
- TÜV certified

Consisting of:
- **Croma Select S** Hand shower Multi (# 26800400)
- **Isiflex** Shower hose 160 cm (# 28276000)

Optional parts:

· Wall bar spacer for Croma 100 Showerpipe	Chrome	95239000	10.90

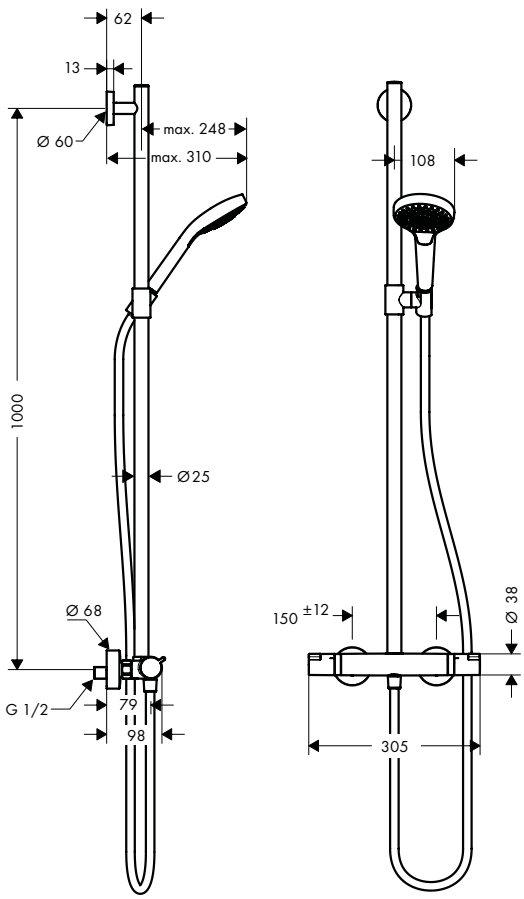

Measurements within scale drawings are in mm.

Technical specifications and units of measure are subject to change.

Croma Select E Showerpipes



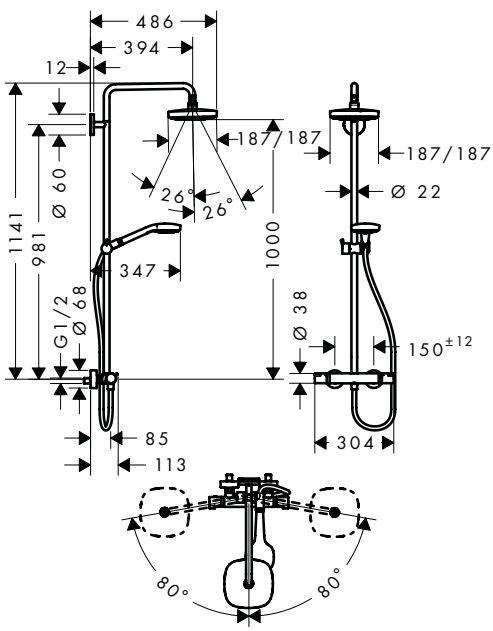

	finish	code no.	Euro
Croma Select E Showerpipe 180 2jet with thermostat	White/Chrome	27256400	719.00

· consists of: overhead shower, hand shower, shower thermostat, shower hose, slider, shower bar
· overhead shower Croma Select E 180 2jet
· shower head size overhead shower: 180 x 180 mm
· spray type overhead shower: Rain, IntenseRain
· convenient diversion via Select button
· ball-joint: overhead shower angle adjustable
· spray type hand shower: Massage spray, IntenseRain, SoftRain
· flow rate IntenseRain spray (at 3 bar): 16 l/min
· flow rate Rain spray (at 3 bar): 16 l/min
· minimum flow pressure: 1,1 bar
· operating pressure: min. 1,1 bar/max. 10 bar
· pipe can be shortened in height
· shower bar diameter: 22 mm
· height-adjustable hand shower holder
· shower arm length overhead shower: 400 mm
· swivel shower arm
· thermostat Ecostat Comfort
· safety lock at 40°C
· adjustable hot water limitation
· outlets controlled via turning handle
· mounting type: exposed installation
· connection dimension DN15
· connection thread G ½
· centre distance 150 ± 12 mm

Consisting of:
· **Croma Select E** Overhead shower 180 2jet (# 26524400)
· **Croma Select E** Hand shower Multi (# 26810400)
· **Isiflex** Shower hose 160 cm (# 28276000)

Water saving EcoSmart version:			
· **Croma Select E** Showerpipe 180 2jet EcoSmart 9 l/min with thermostat	White/Chrome	27257400	719.00
Optional parts:			
· Wall bar spacer for Croma 100 Showerpipe	Chrome	95239000	10.90

Measurements within scale drawings are in mm.

Technical specifications and units of measure are subject to change.

	finish	code no.	Euro
Croma Select E Showerpipe 180 2jet with bath thermostat	White/Chrome	27352400	908.10



- consists of: overhead shower, hand shower, bath thermostat, shower hose, slider, shower bar
- overhead shower Croma Select E 180 2jet
- shower head size overhead shower: 180 x 180 mm
- spray type overhead shower: Rain, IntenseRain
- ball-joint: overhead shower angle adjustable
- spray type hand shower: Massage spray, IntenseRain, SoftRain
- maximum flow rate at 3 bar: 18 l/ min
- flow rate IntenseRain spray (at 3 bar): 17 l/ min
- flow rate Rain spray (at 3 bar): 17 l/ min
- flow rate bath filler: 20 l/ min
- minimum flow pressure: 1 bar
- operating pressure: min. 1 bar/ max. 10 bar
- pipe can be shortened in height
- shower bar diameter: 22 mm
- height-adjustable hand shower holder
- swivel shower arm
- thermostat Ecostat Comfort
- safety lock at 40°C
- adjustable hot water limitation
- outlets controlled via turning handle
- suitable for continuous flow water heaters
- mounting type: exposed installation
- connection dimension DN15
- connection thread G ½
- centre distance 150 ± 12 mm

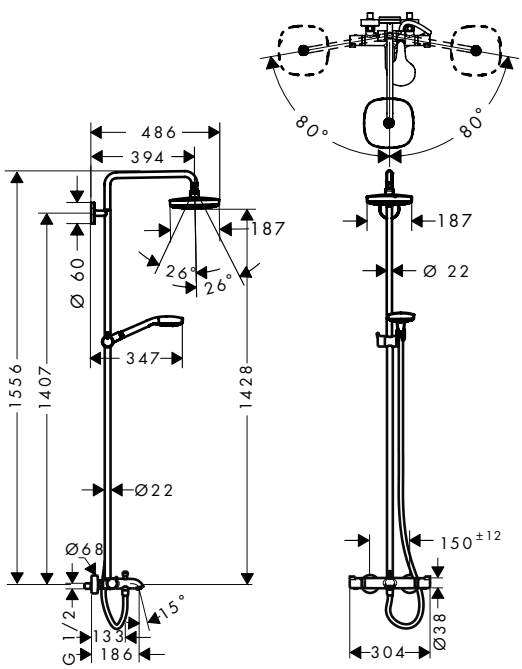

Consisting of:

- **Croma Select E** Overhead shower 180 2jet (# 26524400)
- **Croma Select E** Hand shower Multi (# 26810400)
- **Isiflex** Shower hose 200 cm (# 28274000)

Optional parts:

· Wall bar spacer for Croma 100 Showerpipe	Chrome	95239000	10.90

Measurements within scale drawings are in mm.

Technical specifications and units of measure are subject to change.

	finish	code no.	Euro
Croma Select E Showerpipe 180 2jet with single lever mixer	White/Chrome	27258400	681.10



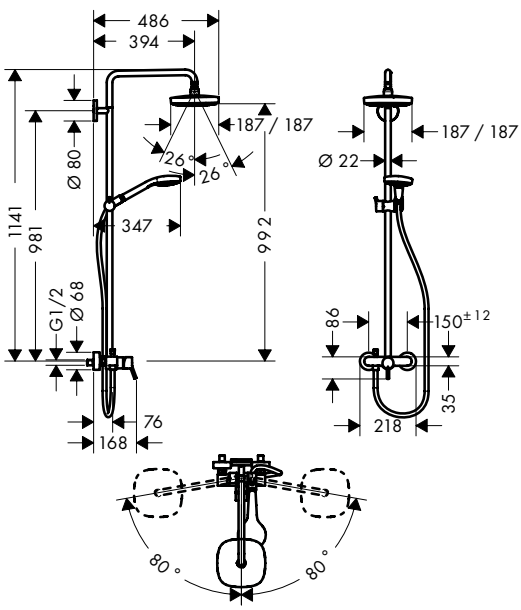

- consists of: overhead shower, hand shower, single lever shower mixer, shower hose, hand shower holder, shower bar
- overhead shower Croma Select E 180 2jet
- shower head size overhead shower: 180 x 180 mm
- spray type overhead shower: Rain, IntenseRain
- ball-joint: overhead shower angle adjustable
- spray type hand shower: Massage spray, IntenseRain, SoftRain
- flow rate IntenseRain spray (at 3 bar): 16 l/min
- flow rate Rain spray (at 3 bar): 16 l/min
- minimum flow pressure: 1 bar
- operating pressure: min. 1 bar/max. 10 bar
- pipe can be shortened in height
- shower bar diameter: 22 mm
- height-adjustable hand shower holder
- shower arm length overhead shower: 400 mm
- swivelling shower arm
- mounting type: exposed installation
- connection dimension DN15
- connection thread G ½
- centre distance 150 ± 12 mm
- ceramic cartridge
- temperature limitation adjustable

Consisting of:

- **Croma Select E** Overhead shower 180 2jet (# 26524400)
- **Croma Select E** Hand shower Multi (# 26810400)
- **Isiflex** Shower hose 160 cm (# 28276000)

Optional parts:

· Wall bar spacer for Croma 100 Showerpipe	Chrome	95239000	10.90

Measurements within scale drawings are in mm.

Technical specifications and units of measure are subject to change.

	finish	code no.	Euro
Croma Select E SemiPipe Multi with thermostat	White/Chrome	27248400	353.10



- consists of: hand shower, shower thermostat, shower hose, slider, shower bar
- spray type hand shower: Massage spray, IntenseRain, SoftRain
- wallbar could be also used as grab bar
- maximum flow rate at 3 bar: 16 l/min
- minimum flow pressure: 1 bar
- operating pressure: min. 1 bar/max. 10 bar
- wall bar: 1000 mm
- shower bar diameter: 25 mm
- height-adjustable hand shower holder
- thermostat Ecostat Comfort
- safety lock at 40°C
- adjustable hot water limitation
- outlets controlled via turning handle
- mounting type: exposed installation
- connection dimension DN15
- connection thread G ½
- centre distance 150 ± 12 mm
- TÜV certified

Consisting of:
- **Croma Select E** Hand shower Multi (# 26810400)
- **Isiflex** Shower hose 160 cm (# 28276000)

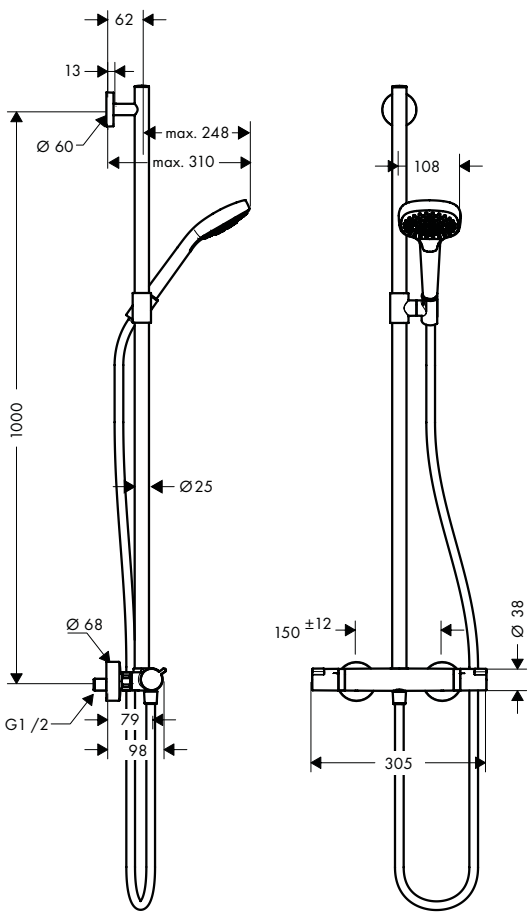

Optional parts:

· Wall bar spacer for Croma 100 Showerpipe	Chrome	95239000	10.90

Measurements within scale drawings are in mm.

Technical specifications and units of measure are subject to change.

Croma E Showerpipes



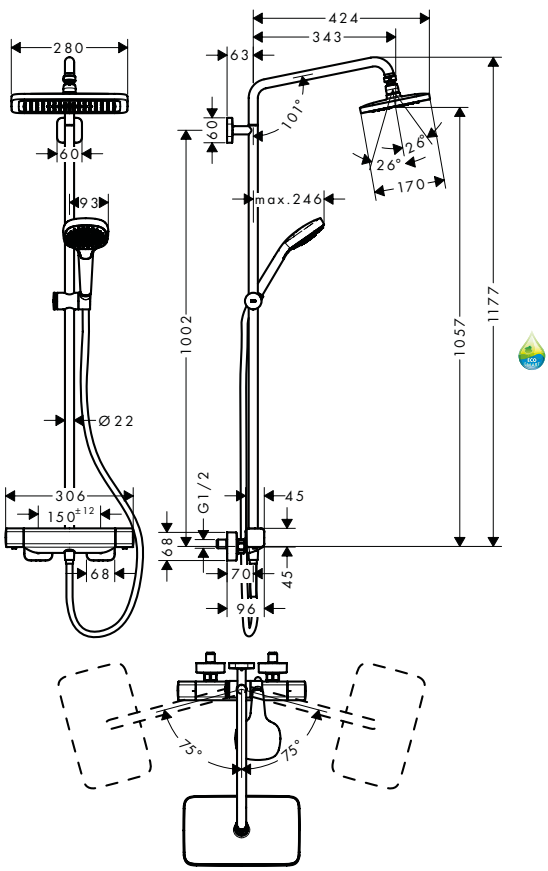

	finish	code no.	Euro
Croma E Showerpipe 280 1jet with thermostat	Chrome	27630000	759.70

Cool Contact · Select · AirPower · Quick Clean · XXL Performance

- consists of: overhead shower, hand shower, shower thermostat, shower hose, slider, shower bar
- overhead shower Croma E 280 1jet
- shower head size overhead shower: 280 x 170 mm
- spray type overhead shower: RainAir
- ball-joint: overhead shower angle adjustable
- fully chrome-plated spray disc
- spray type hand shower: Massage spray, IntenseRain, SoftRain
- maximum flow rate at 3 bar: 15 l/min
- minimum flow pressure: 1,7 bar
- operating pressure: min. 0.17 MPa/max. 1.0 MPa
- pipe can be shortened in height
- shower bar diameter: 22 mm
- height-adjustable slider with locking push-button slider
- shower arm length overhead shower: 340 mm
- swivel shower arm
- CoolContact thermostat: Prevents the housing from heating up, making showering even safer
- thermostat Ecostat E
- safety lock at 40°C
- suitable for continuous flow water heaters
- mounting type: exposed installation
- connection thread G ½
- centre distance 150 ± 12 mm

Consisting of:

- **Croma E** Overhead shower 280 1jet (# 26257000)
- **Ecostat E** Shower thermostat for exposed installation (# 15773000)
- **Croma Select E** Hand shower Multi (# 26810400)
- **Isiflex** Shower hose 160 cm (# 28276000)

Water saving EcoSmart version:			
Croma E Showerpipe 280 1jet EcoSmart with thermostat	Chrome	27660000	759.70

Measurements within scale drawings are in mm.

Technical specifications and units of measure are subject to change.

	finish	code no.	Euro
	Chrome	27687000	936.30



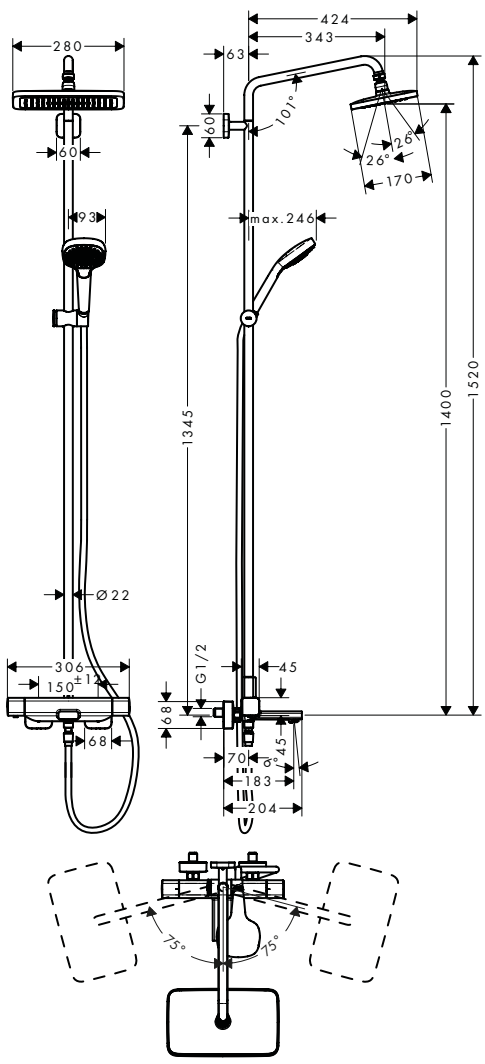

Croma E Showerpipe 280 1jet with bath thermostat

- consists of: overhead shower, hand shower, bath thermostat, shower hose, slider, shower bar
- shower head size overhead shower: 280 x 170 mm
- spray type overhead shower: RainAir
- ball-joint: overhead shower angle adjustable
- fully chrome-plated spray disc
- spray type hand shower: Massage spray, IntenseRain, SoftRain
- maximum flow rate at 3 bar: 20,3 l/min
- flow rate RainAir spray (at 3 bar): 15 l/min
- flow rate bath filler: 20 l/min
- minimum flow pressure: 1,7 bar
- operating pressure: min. 0.17 MPa/max. 1.0 MPa
- shower bar diameter: 22 mm
- height-adjustable slider with locking push-button slider
- swivel shower arm
- CoolContact thermostat: Prevents the housing from heating up, making showering even safer
- thermostat Ecostat E
- safety lock at 40°C
- mounting type: exposed installation
- connection thread G ½
- centre distance 150 ± 12 mm

Consisting of:

- **Croma E** Overhead shower 280 1jet (# 26257000)
- **Croma Select E** Hand shower Multi (# 26810400)
- **Ecostat E** Bath thermostat for exposed installation (# 15774000)
- **Isiflex** Shower hose 160 cm (# 28276000)

Measurements within scale drawings are in mm.

Croma Showerpipes



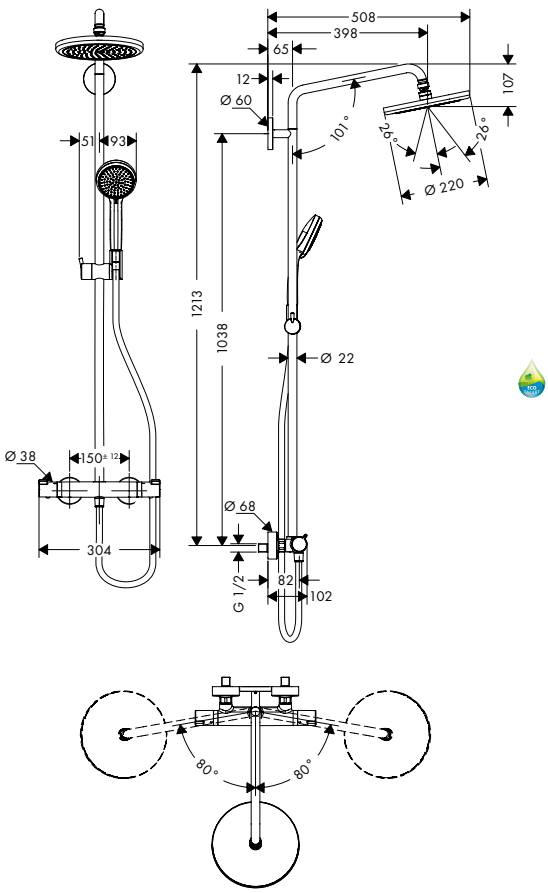

	finish	code no.	Euro
Croma Showerpipe 220 1jet with thermostat	Chrome	27185000	710.00

AirPower · Quick Clean · XXL Performance

- consists of: overhead shower, hand shower, shower thermostat, shower hose, slider, shower bar
- overhead shower Croma 220
- shower head size overhead shower: 220 mm
- spray type overhead shower: RainAir
- ball-joint: overhead shower angle adjustable
- spray type hand shower: Rain, Massage spray, Shampoo spray, normal spray
- maximum flow rate at 3 bar: 15 l/min
- minimum flow pressure: 1,2 bar
- operating pressure: min. 0.12 MPa/max. 1.0 MPa
- pipe can be shortened in height
- shower bar diameter: 22 mm
- height-adjustable hand shower holder
- shower arm length overhead shower: 400 mm
- swivel shower arm
- thermostat Ecostat Comfort
- safety lock at 40°C
- adjustable hot water limitation
- outlets controlled via turning handle
- will not run two outlets at same time
- mounting type: exposed installation
- connection dimension DN15
- connection thread G ½
- centre distance 150 ± 12 mm

Consisting of:

- **Croma** Overhead shower 220 1jet (# 26464000)
- **Croma 100** Hand shower Vario (# 28535000)
- **Isiflex** Shower hose 160 cm (# 28276000)

Water saving EcoSmart version:

Croma Showerpipe 220 1jet EcoSmart 9 l/min with thermostat	Chrome	27188000	710.00

Optional parts:

Wall bar spacer for Croma 100 Showerpipe	Chrome	95239000	10.90

Measurements within scale drawings are in mm.

Technical specifications and units of measure are subject to change.



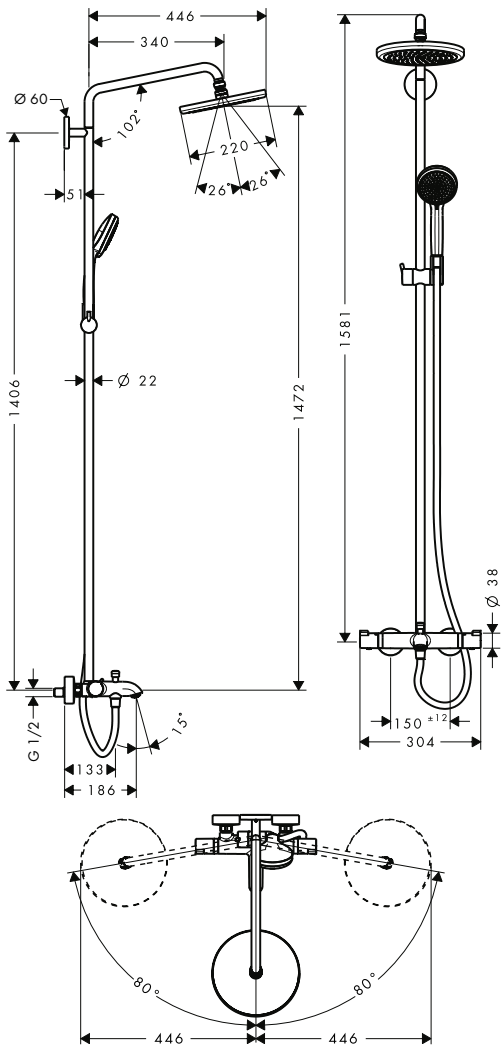

	finish	code no.	Euro
Croma Showerpipe 220 1jet with bath thermostat	Chrome	27223000	922.10

AirPower · Quick Clean · XXL Performance

- consists of: overhead shower, hand shower, bath thermostat, shower hose, slider, shower bar
- overhead shower Croma 220
- shower head size overhead shower: 220 mm
- spray type overhead shower: RainAir
- ball-joint: overhead shower angle adjustable
- fully chrome-plated spray disc
- spray type hand shower: Rain, Massage spray, Shampoo spray, normal spray
- flow rate RainAir spray (at 3 bar): 17 l/min
- flow rate bath filler: 20 l/min
- minimum flow pressure: 1 bar
- operating pressure: min. 1 bar/max. 10 bar
- shower bar diameter: 22 mm
- height-adjustable hand shower holder
- swivel shower arm
- thermostat Ecostat Comfort
- safety lock at 40°C
- adjustable hot water limitation
- outlets controlled via turning handle
- mounting type: exposed installation
- connection dimension DN15
- connection thread G ½
- centre distance 150 ± 12 mm

Consisting of:

- **Croma** Overhead shower 220 1jet (# 26464000)
- **Croma 100** Hand shower Vario (# 28535000)
- **Isiflex** Shower hose 200 cm (# 28274000)

Optional parts:

· Wall bar spacer for Croma 100 Showerpipe	Chrome	95239000	10.90

Measurements within scale drawings are in mm.

Technical specifications and units of measure are subject to change.



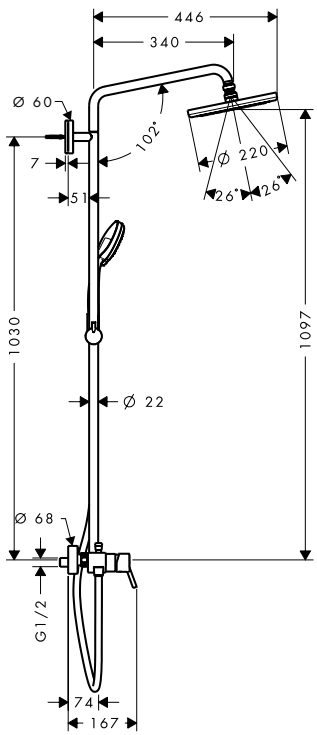

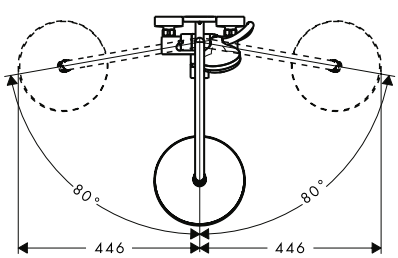

	finish	code no.	Euro
Croma Showerpipe 220 1jet with single lever mixer	Chrome	27222000	667.10

AirPower · Quick Clean · XXL Performance

- consists of: overhead shower, hand shower, single lever shower mixer, shower hose, hand shower holder, shower bar
- overhead shower Croma 220
- shower head size overhead shower: 220 mm
- spray type overhead shower: RainAir
- ball-joint: overhead shower angle adjustable
- fully chrome-plated spray disc
- spray type hand shower: Rain, Massage spray, Shampoo spray, normal spray
- flow rate RainAir spray (at 3 bar): 16 l/min
- minimum flow pressure: 1 bar
- operating pressure: min. 1 bar/max. 10 bar
- pipe can be shortened in height
- shower bar diameter: 22 mm
- height-adjustable hand shower holder
- shower arm length overhead shower: 400 mm
- swivelling shower arm
- mounting type: exposed installation
- connection dimension DN15
- connection thread G ½
- centre distance 150 ± 12 mm
- ceramic cartridge
- temperature limitation adjustable

Consisting of:

- **Croma** Overhead shower 220 1jet (# 26464000)
- **Croma 100** Hand shower Vario (# 28535000)
- **Isiflex** Shower hose 160 cm (# 28276000)

Optional parts:

· Wall bar spacer for Croma 100 Showerpipe	Chrome	95239000	10.90

Measurements within scale drawings are in mm.

Technical specifications and units of measure are subject to change.

	finish	code no.	Euro
Croma Showerpipe 220 1jet Reno	Chrome	27224000	539.20



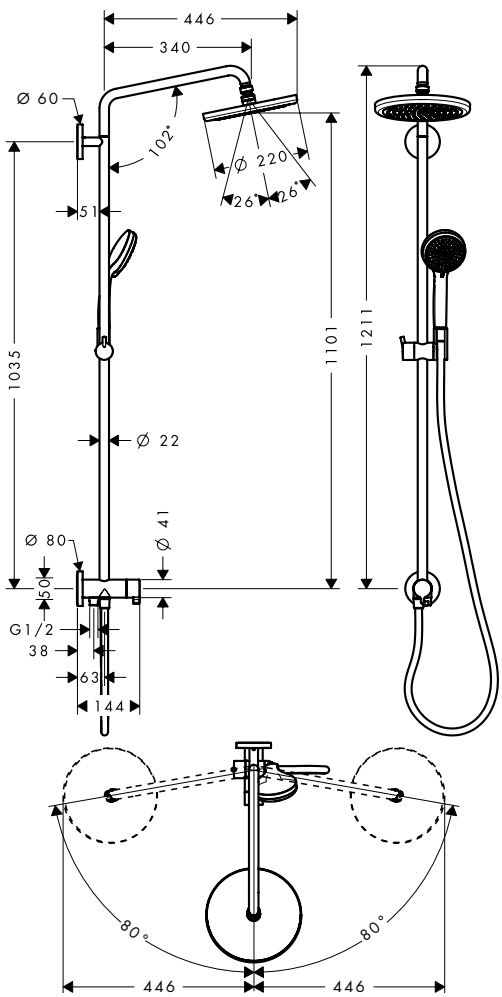

- consists of: overhead shower, hand shower, shower hose, hand shower holder, shower bar
- overhead shower Croma 220
- shower head size overhead shower: 220 mm
- spray type overhead shower: RainAir
- fully chrome-plated spray disc
- ball-joint: overhead shower angle adjustable
- spray type hand shower: Rain, Massage spray, Shampoo spray, normal spray
- flow rate RainAir spray (at 3 bar): 14 l/min
- minimum flow pressure: 1,7 bar
- operating pressure: min. 0.17 MPa/max. 0.6 MPa
- mounting type: exposed installation
- pipe can be shortened in height
- shower bar diameter: 22 mm
- height-adjustable hand shower holder
- shower arm length: 400 mm
- swivelling shower arm
- water connection: Isiflex shower hose 80 cm
- connection dimension: DN15
- connection thread G ½

Consisting of:
- **Croma** Overhead shower 220 1jet (# 26464000)
- **Croma 100** Hand shower Vario (# 28535000)
- **Isiflex** Shower hose 160 cm (# 28276000)
- **Isiflex** Shower hose B 80 cm (# 28278000)

Optional parts:			
· Wall bar spacer for Croma 100 Showerpipe	Chrome	95239000	10.90

Measurements within scale drawings are in mm.

Technical specifications and units of measure are subject to change.

Crometta S Showerpipes



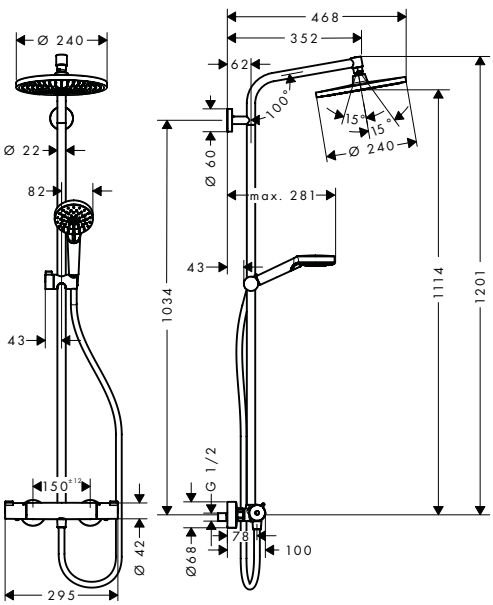

	finish	code no.	Euro
Crometta S Showerpipe 240 1jet with thermostat	Chrome	27267000	459.70

Quick Clean · XXL Performance

- consists of: overhead shower, hand shower, shower thermostat, shower hose, slider, shower bar
- overhead shower Crometta S 240
- shower head size overhead shower: 240 mm
- spray type overhead shower: Rain
- ball-joint: overhead shower angle adjustable
- hand shower holder inclination angle can be adjusted by 45°
- spray type hand shower: Rain, IntenseRain
- maximum flow rate at 3 bar: 16 l/min
- flow rate Rain spray (at 3 bar): 16 l/min
- minimum flow pressure: 1,2 bar
- operating pressure: min. 0.12 MPa/max. 1.0 MPa
- pipe can be shortened in height
- shower bar diameter: 22 mm
- height-adjustable hand shower holder
- shower arm length overhead shower: 350 mm
- thermostat Ecostat 1001 CL
- safety lock at 40°C
- adjustable hot water limitation
- outlets controlled via turning handle
- mounting type: exposed installation
- connection dimension DN15
- connection thread G ½
- centre distance 150 ± 12 mm

Consisting of:

- **Crometta S** Overhead shower 240 1jet (# 26723000)
- **Crometta** Hand shower Vario (# 26330400)
- **Isiflex** Shower hose 160 cm (# 28276000)

Water saving EcoSmart version:

Crometta S Showerpipe 240 1jet EcoSmart 9 l/min with thermostat	Chrome	27268000	461.90

Optional parts:

Wall bar spacer for Croma 100 Showerpipe	Chrome	95239000	10.90

Measurements within scale drawings are in mm.

Technical specifications and units of measure are subject to change.

	finish	code no.	Euro
Crometta S Showerpipe 240 1jet with bath thermostat	Chrome	27320000	636.60



- consists of: overhead shower, hand shower, bath thermostat, shower hose, slider, shower bar
- overhead shower Crometta S 240
- shower head size overhead shower: 240 mm
- spray type overhead shower: Rain
- ball-joint: overhead shower angle adjustable
- hand shower holder inclination angle can be adjusted by 45°
- fully chrome-plated spray disc
- spray type hand shower: Rain, IntenseRain
- flow rate Rain spray (at 3 bar): 17 l/min
- flow rate bath filler: 20 l/min
- minimum flow pressure: 1 bar
- operating pressure: min. 1 bar/max. 10 bar
- pipe can be shortened in height
- shower bar diameter: 22 mm
- height-adjustable hand shower holder
- shower arm length overhead shower: 350 mm
- thermostat Ecostat Comfort
- safety lock at 40°C
- adjustable hot water limitation
- outlets controlled via turning handle
- mounting type: exposed installation
- connection dimension DN15
- connection thread G ½
- centre distance 150 ± 12 mm

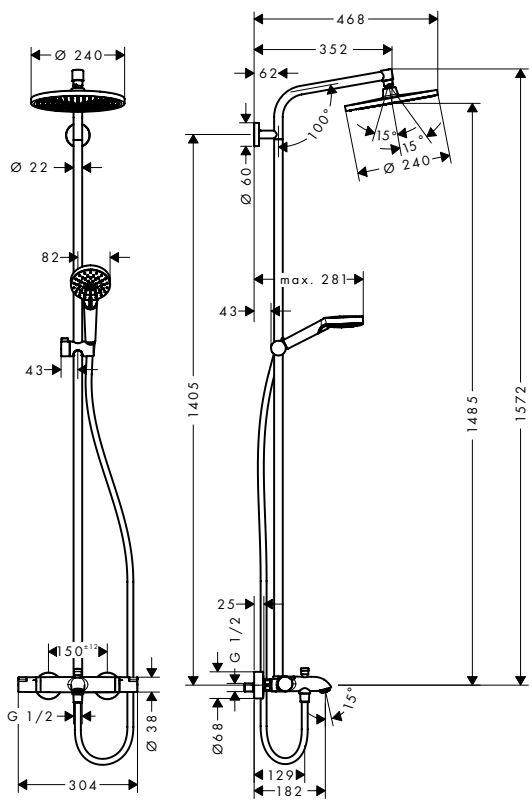

Consisting of:

- **Crometta S** Overhead shower 240 1jet (# 26723000)
- **Crometta** Hand shower Vario (# 26330400)
- **Isiflex** Shower hose 200 cm (# 28274000)

Optional parts:

· Wall bar spacer for Croma 100 Showerpipe	Chrome	95239000	10.90

Measurements within scale drawings are in mm.

Technical specifications and units of measure are subject to change.

	finish	code no.	Euro
Crometta S Showerpipe 240 1jet with single lever mixer	Chrome	27269000	424.30



- consists of: overhead shower, hand shower, single lever shower mixer, shower hose, hand shower holder, shower bar
- overhead shower Crometta S 240
- shower head size overhead shower: 240 mm
- spray type overhead shower: Rain
- ball-joint: overhead shower angle adjustable
- hand shower holder inclination angle can be adjusted by 45°
- fully chrome-plated spray disc
- spray type hand shower: Rain, IntenseRain
- flow rate Rain spray (at 3 bar): 15 l/min
- minimum flow pressure: 1,8 bar
- operating pressure: min. 0.18 MPa/max. 1.0 MPa
- pipe can be shortened in height
- shower bar diameter: 22 mm
- height-adjustable hand shower holder
- shower arm length overhead shower: 350 mm
- mounting type: exposed installation
- connection dimension DN15
- connection thread G ½
- centre distance 150 ± 12 mm
- ceramic cartridge
- adjustable hot water limitation

Consisting of:
- **Crometta S** Overhead shower 240 1jet (# 26723000)
- **Crometta** Hand shower Vario (# 26330400)
- **Isiflex** Shower hose 160 cm (# 28276000)

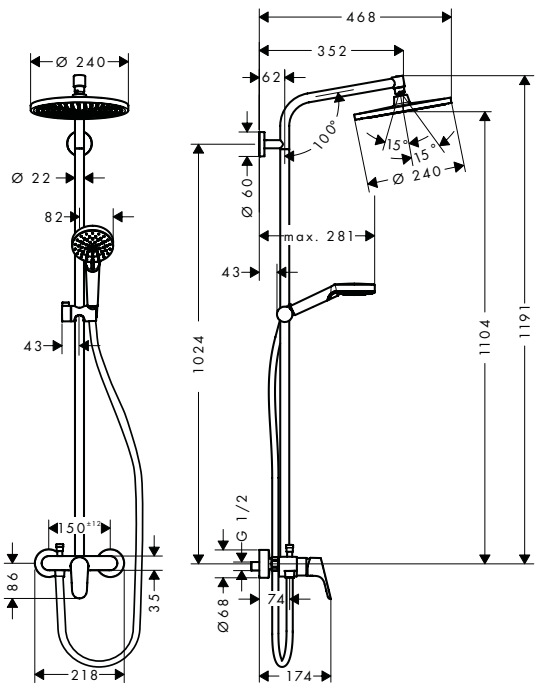

Optional parts:

· Wall bar spacer for Croma 100 Showerpipe	Chrome	95239000	10.90

Measurements within scale drawings are in mm.

Technical specifications and units of measure are subject to change.

	finish	code no.	Euro
Crometta S Showerpipe 240 1jet EcoSmart 9 l/ min Reno	Chrome	27270000	377.10



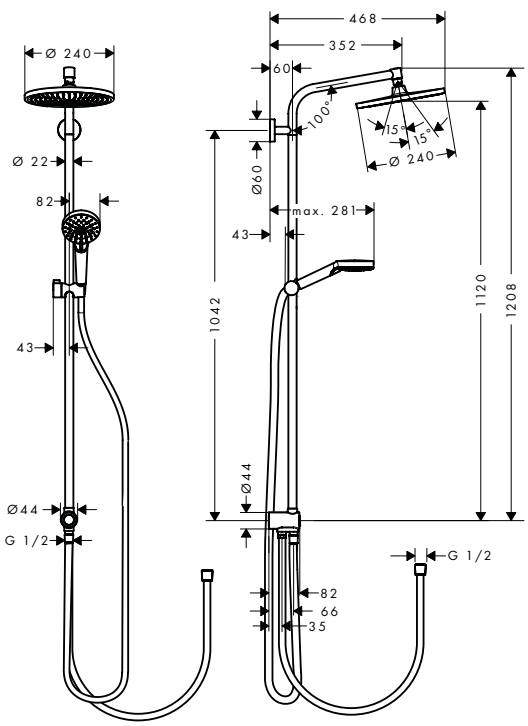

- consists of: overhead shower, hand shower, shower bar, hand shower holder, shower hose
- overhead shower Crometta S 240
- shower head size overhead shower: 240 mm
- spray type overhead shower: Rain
- fully chrome-plated spray disc
- ball-joint: overhead shower angle adjustable
- spray type hand shower: Rain, IntenseRain
- hand shower holder inclination angle can be adjusted by 45°
- maximum flow rate at 3 bar: 9 l/ min
- flow rate Rain spray (at 3 bar): 9 l/ min
- minimum flow pressure: 1 bar
- operating pressure: min. 1 bar/ max. 10 bar
- mounting type: exposed installation
- pipe can be shortened in height
- shower bar diameter: 22 mm
- height-adjustable hand shower holder
- shower arm length: 350 mm
- water connection: Isiflex shower hose 80 cm
- connection dimension: DN15
- connection thread G ½

Consisting of:

- **Crometta S** Overhead shower 240 1jet EcoSmart 9 l/ min (# 26724000)
- **Crometta** Hand shower Vario EcoSmart 9 l/ min (# 26332400)
- **Isiflex** Shower hose 160 cm (# 28276000)
- **Isiflex** Shower hose B 80 cm (# 28278000)

Optional parts:

· Wall bar spacer for Croma 100 Showerpipe	Chrome	95239000	10.90

Measurements within scale drawings are in mm.

Technical specifications and units of measure are subject to change.

Crometta E Showerpipes



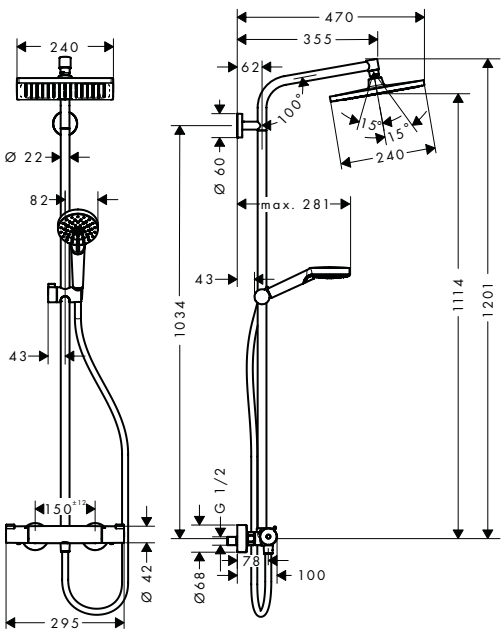

	finish	code no.	Euro
Crometta E Showerpipe 240 1jet with thermostat	Chrome	27271000	459.70

Quick Clean · XXL Performance

- consists of: overhead shower, hand shower, shower thermostat, shower hose, slider, shower bar
- overhead shower Crometta E 240
- shower head size overhead shower: 240 x 240 mm
- spray type overhead shower: Rain
- ball-joint: overhead shower angle adjustable
- hand shower holder inclination angle can be adjusted by 45°
- fully chrome-plated spray disc
- spray type hand shower: Rain, IntenseRain
- flow rate Rain spray (at 3 bar): 15 l/min
- minimum flow pressure: 1,2 bar
- operating pressure: min. 0.12 MPa/max. 1.0 MPa
- pipe can be shortened in height
- shower bar diameter: 22 mm
- height-adjustable hand shower holder
- shower arm length overhead shower: 350 mm
- thermostat Ecostat 1001 CL
- safety lock at 40°C
- adjustable hot water limitation
- outlets controlled via turning handle
- mounting type: exposed installation
- connection dimension DN15
- connection thread G ½
- centre distance 150 ± 12 mm

Consisting of:

- **Crometta E** Overhead shower 240 1jet (# 26726000)
- **Crometta** Hand shower Vario (# 26330400)
- **Isiflex** Shower hose 160 cm (# 28276000)

Water saving EcoSmart version:			
· **Crometta E** Showerpipe 240 1jet EcoSmart with thermostat	Chrome	27281000	461.90
Optional parts:			
· Wall bar spacer for Croma 100 Showerpipe	Chrome	95239000	10.90

Measurements within scale drawings are in mm.

Technical specifications and units of measure are subject to change.

	finish	code no.	Euro
Crometta E Showerpipe 240 1jet with bath thermostat	Chrome	27298000	636.60



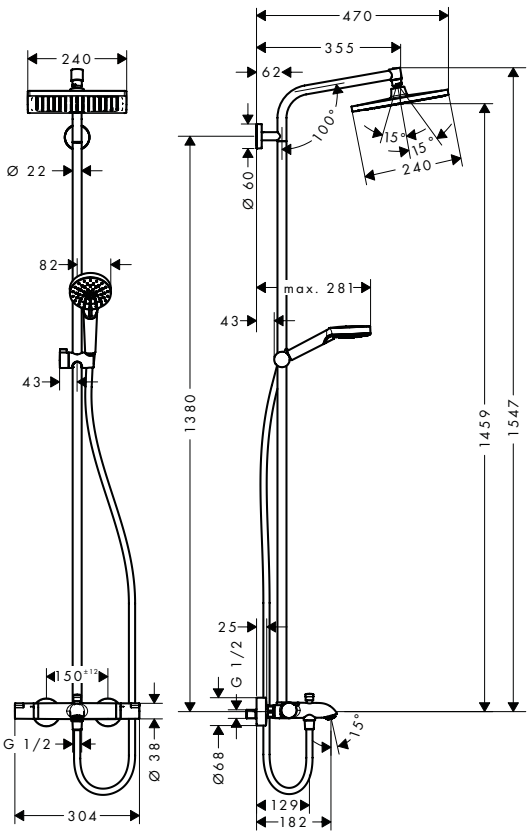

- consists of: overhead shower, hand shower, bath thermostat, shower hose, slider, shower bar
- overhead shower Crometta E 240
- shower head size overhead shower: 240 x 240 mm
- spray type overhead shower: Rain
- ball-joint: overhead shower angle adjustable
- hand shower holder inclination angle can be adjusted by 45°
- fully chrome-plated spray disc
- spray type hand shower: Rain, IntenseRain
- flow rate Rain spray (at 3 bar): 17 l/min
- flow rate bath filler: 20 l/min
- minimum flow pressure: 1 bar
- operating pressure: min. 1 bar/max. 10 bar
- pipe can be shortened in height
- shower bar diameter: 22 mm
- height-adjustable hand shower holder
- shower arm length overhead shower: 350 mm
- thermostat Ecostat Comfort
- safety lock at 40°C
- adjustable hot water limitation
- outlets controlled via turning handle
- mounting type: exposed installation
- connection dimension DN15
- connection thread G ½
- centre distance 150 ± 12 mm

Consisting of:

- **Crometta E** Overhead shower 240 1jet (# 26726000)
- **Crometta** Hand shower Vario (# 26330400)
- **Isiflex** Shower hose 200 cm (# 28274000)

Optional parts:

· Wall bar spacer for Croma 100 Showerpipe	Chrome	95239000	10.90

Measurements within scale drawings are in mm.

Technical specifications and units of measure are subject to change.



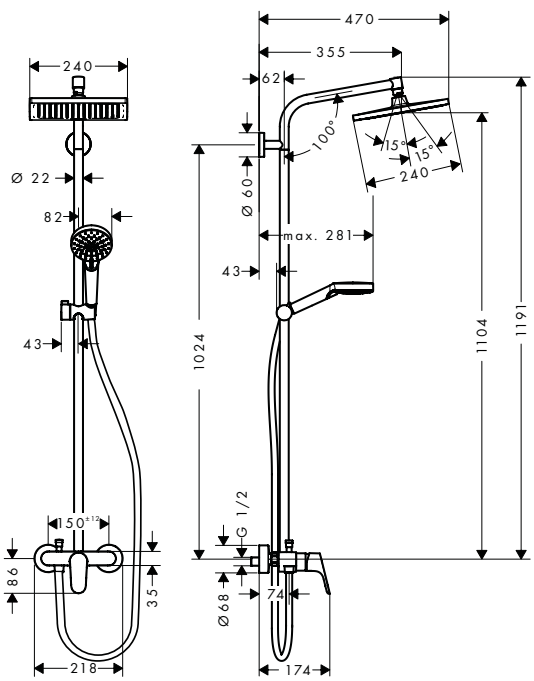

	finish	code no.	Euro
Crometta E Showerpipe 240 1jet with single lever mixer	Chrome	27284000	424.30

Quick Clean · XXL Performance

- consists of: overhead shower, hand shower, single lever shower mixer, shower hose, hand shower holder, shower bar
- overhead shower Crometta E 240
- shower head size overhead shower: 240 x 240 mm
- spray type overhead shower: Rain
- ball-joint: overhead shower angle adjustable
- hand shower holder inclination angle can be adjusted by 45°
- fully chrome-plated spray disc
- spray type hand shower: Rain, IntenseRain
- maximum flow rate at 3 bar: 15 l/min
- flow rate Rain spray (at 3 bar): 15 l/min
- minimum flow pressure: 1,8 bar
- operating pressure: min. 0.18 MPa/max. 1.0 MPa
- pipe can be shortened in height
- shower bar diameter: 22 mm
- height-adjustable hand shower holder
- shower arm length overhead shower: 350 mm
- mounting type: exposed installation
- connection dimension DN15
- connection thread G ½
- centre distance 150 ± 12 mm
- ceramic cartridge
- adjustable hot water limitation

Consisting of:

- **Crometta E** Overhead shower 240 1jet (# 26726000)
- **Crometta** Hand shower Vario (# 26330400)
- **Isiflex** Shower hose 160 cm (# 28276000)

Optional parts:

· Wall bar spacer for Croma 100 Showerpipe	Chrome	95239000	10.90

Measurements within scale drawings are in mm.

Technical specifications and units of measure are subject to change.

	finish	code no.	Euro
Crometta E Showerpipe 240 1jet EcoSmart 9 l/ min Reno	Chrome	27289000	377.10



- consists of: overhead shower, hand shower, shower bar, hand shower holder, shower hose
- overhead shower Crometta E 240
- shower head size overhead shower: 240 x 240 mm
- spray type overhead shower: Rain
- fully chrome-plated spray disc
- ball-joint: overhead shower angle adjustable
- spray type hand shower: Rain, IntenseRain
- hand shower holder inclination angle can be adjusted by 45°
- maximum flow rate at 3 bar: 9 l/ min
- flow rate Rain spray (at 3 bar): 9 l/ min
- minimum flow pressure: 1 bar
- operating pressure: min. 1 bar/ max. 10 bar
- mounting type: exposed installation
- pipe can be shortened in height
- shower bar diameter: 22 mm
- height-adjustable hand shower holder
- shower arm length: 350 mm
- water connection: Isiflex shower hose 80 cm
- connection dimension: DN15
- connection thread G ½

Consisting of:

- **Crometta E** Overhead shower 240 1jet EcoSmart 9 l/ min (# 26727000)
- **Crometta** Hand shower Vario EcoSmart 9 l/ min (# 26332400)
- **Isiflex** Shower hose 160 cm (# 28276000)
- **Isiflex** Shower hose B 80 cm (# 28278000)

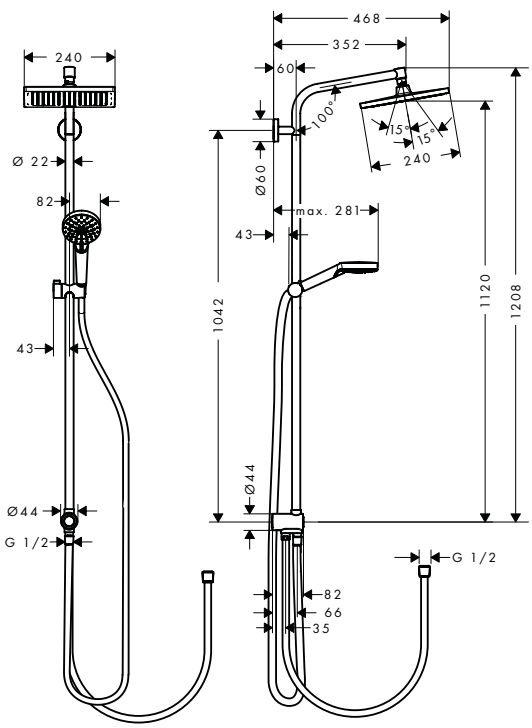

Optional parts:

· Wall bar spacer for Croma 100 Showerpipe	Chrome	95239000	10.90

Measurements within scale drawings are in mm.

Technical specifications and units of measure are subject to change.

Vernis Blend Showerpipes

NEW



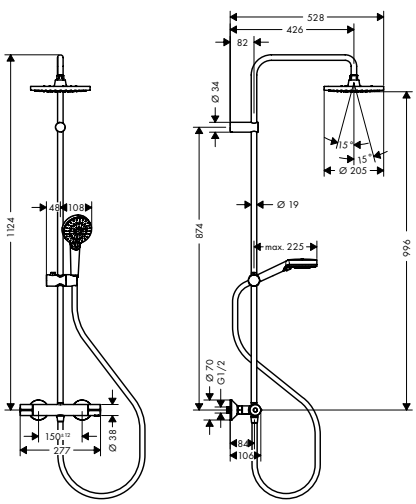

		finish	code no.	Euro
	Vernis Blend Showerpipe 200 1jet with thermostat	Chrome Matt Black	26276000 26276670	385.00 539.00

Quick Clean | XXL Performance

- consists of: overhead shower, hand shower, shower thermostat, shower hose, slider
- overhead shower Vernis Blend 200 1jet
- shower head size overhead shower: 205 mm
- spray type overhead shower: Rain
- ball-joint: overhead shower angle adjustable
- spray type hand shower: Rain, IntenseRain
- maximum flow rate at 3 bar: 15,9 l/min
- minimum flow pressure: 1 bar
- operating pressure: min. 1 bar/max. 10 bar
- shower bar diameter: 19 mm
- height-adjustable slider with locking push-button slider
- shower arm length overhead shower: 426 mm
- thermostat Vernis
- safety lock at 40°C
- adjustable hot water limitation
- outlets controlled via turning handle
- mounting type: exposed installation
- connection dimension DN15
- connection thread G ½
- centre distance 150 ± 12 mm
- intrinsically safe against backflow

Consisting of:

NEW
- **Vernis Blend** Overhead shower 200 1jet (# 26271XXX)

NEW
- **Vernis Blend** Hand shower Vario (# 26270XXX)
- **Metaflex** Shower hose 160 cm (# 28266000)

Water saving EcoSmart version:

NEW	**Vernis Blend** Showerpipe 200 1jet EcoSmart with thermostat	Chrome Matt Black	26089000 26089670	385.00 539.00
NEW	**Vernis Blend** Showerpipe 200 1jet Green with thermostat	Chrome	26318000	385.00

Measurements within scale drawings are in mm.

Technical specifications and units of measure are subject to change.

	finish	code no.	Euro
Vernis Blend Showerpipe 200 1jet with thermostat project pack (2 pcs.)	Chrome	26285000	755.00

Quick Clean · XXL Performance

NEW

2x



- consists of: overhead shower, hand shower, shower thermostat, shower hose, slider
- overhead shower Vernis Blend 200 1jet
- shower head size overhead shower: 205 mm
- spray type overhead shower: Rain
- ball-joint: overhead shower angle adjustable
- spray type hand shower: Rain, IntenseRain
- maximum flow rate at 3 bar: 15,9 l/min
- minimum flow pressure: 1 bar
- operating pressure: min. 1 bar/max. 10 bar
- shower bar diameter: 19 mm
- height-adjustable slider with locking push-button slider
- shower arm length overhead shower: 426 mm
- thermostat Vernis
- safety lock at 40°C
- adjustable hot water limitation
- outlets controlled via turning handle
- mounting type: exposed installation
- connection dimension DN15
- connection thread G ½
- centre distance 150 ± 12 mm
- intrinsically safe against backflow
- packaging unit: 2 pieces

Consisting of:

NEW

- **Vernis Blend** Showerpipe 200 1jet with thermostat (# 26276000)

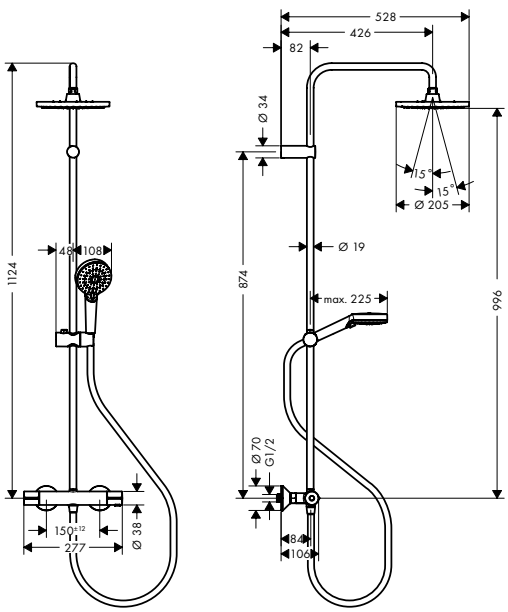

Measurements within scale drawings are in mm.

Technical specifications and units of measure are subject to change.

		finish	code no.	Euro
NEW	**Vernis Blend** Showerpipe 200 1jet with bath thermostat · consists of: overhead shower, hand shower, bath thermostat, shower hose, shower holder · overhead shower Vernis Blend 200 1jet · shower head size overhead shower: 205 mm · spray type overhead shower: Rain · ball-joint: overhead shower angle adjustable · spray type hand shower: Rain, IntenseRain · maximum flow rate at 3 bar: 20 l/min · minimum flow pressure: 1 bar · operating pressure: min. 1 bar/ max. 10 bar · shower bar diameter: 19 mm · height-adjustable slider with locking push-button slider · shower arm length overhead shower: 426 mm · thermostat Vernis · safety lock at 40°C · adjustable hot water limitation · outlets controlled via turning handle · mounting type: exposed installation · connection dimension DN15 · connection thread G ½ · centre distance 150 ± 12 mm · intrinsically safe against backflow	Chrome	26274000	500.00
	Consisting of: · **Vernis Blend** Overhead shower 200 1jet (# 26271000)			
NEW	· **Vernis Blend** Hand shower Vario (# 26270000)			
NEW	· **Metaflex** Shower hose 160 cm (# 28266000)			
	Water saving EcoSmart version:			
NEW	· **Vernis Blend** Showerpipe 200 1jet EcoSmart with bath thermostat	Chrome	26079000	500.00

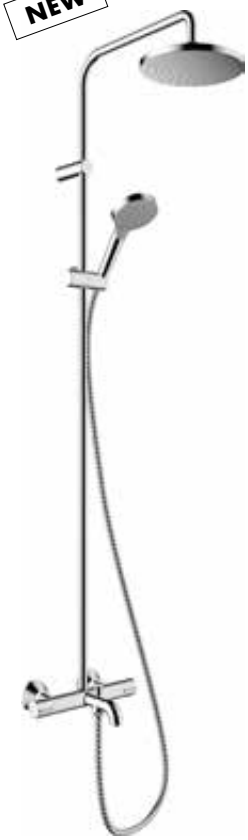

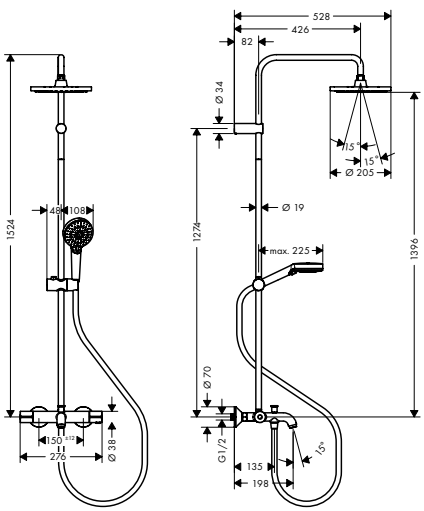

Measurements within scale drawings are in mm.

Technical specifications and units of measure are subject to change.

NEW



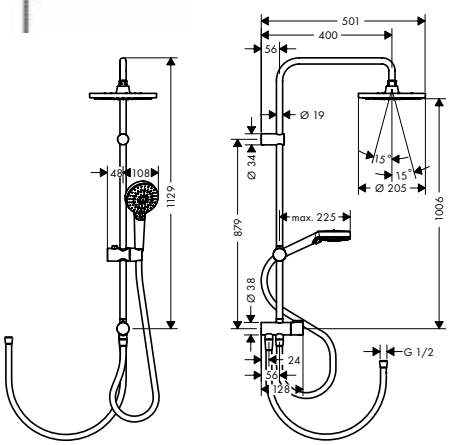

		finish	code no.	Euro
	Vernis Blend Showerpipe 200 1jet Reno	Chrome	26272000	315.00
		Matt Black	26272670	441.00

Quick Clean | XXL Performance

- consists of: overhead shower, hand shower, shower hose, hand shower holder
- overhead shower Vernis Blend 200 1jet
- shower head size overhead shower: 205 mm
- spray type overhead shower: Rain
- ball-joint: overhead shower angle adjustable
- spray type hand shower: Rain, IntenseRain
- maximum flow rate at 3 bar: 14,6 l/min
- minimum flow pressure: 1 bar
- operating pressure: min. 1 bar/max. 10 bar
- mounting type: exposed installation
- shower bar diameter: 19 mm
- height-adjustable slider with locking push-button slider
- shower arm length: 400 mm
- water connection: Metaflex shower hose 80 cm and 160 cm
- connection dimension: DN15
- connection thread G ½

Consisting of:

NEW
- **Vernis Blend** Overhead shower 200 1jet (# 26271XXX)

NEW
- **Vernis Blend** Hand shower Vario (# 26270XXX)
- **Metaflex** Shower hose 160 cm (# 28266000)
- **Isiflex** Shower hose B 80 cm (# 28278000)

Water saving EcoSmart version:

NEW **Vernis Blend** Showerpipe 200 1jet Reno EcoSmart	Chrome	26099000	315.00
	Matt Black	26099670	441.00

Measurements within scale drawings are in mm.

Technical specifications and units of measure are subject to change.

Vernis Shape Showerpipes

NEW



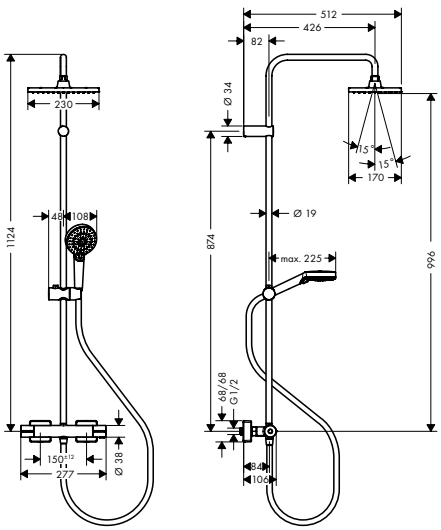

	finish	code no.	Euro
Vernis Shape Showerpipe 230 1jet with thermostat	Chrome	26286000	385.00
	Matt Black	26286670	539.00

Quick Clean · XXL Performance

- consists of: overhead shower, hand shower, shower thermostat, shower hose, slider
- overhead shower Vernis Shape 230 1jet
- shower head size overhead shower: 230 x 170 mm
- spray type overhead shower: Rain
- ball-joint: overhead shower angle adjustable
- spray type hand shower: Rain, IntenseRain
- maximum flow rate at 3 bar: 15,9 l/min
- minimum flow pressure: 1 bar
- operating pressure: min. 1 bar/max. 10 bar
- shower bar diameter: 19 mm
- height-adjustable slider with locking push-button slider
- shower arm length overhead shower: 426 mm
- thermostat Vernis
- safety lock at 40°C
- adjustable hot water limitation
- outlets controlled via turning handle
- mounting type: exposed installation
- connection dimension DN15
- connection thread G ½
- centre distance 150 ± 12 mm

Consisting of:

NEW · **Vernis Shape** Overhead shower 230 1jet (# 26281XXX)

NEW · **Vernis Blend** Hand shower Vario (# 26270XXX)

· **Metaflex** Shower hose 160 cm (# 28266000)

Water saving EcoSmart version:

NEW · **Vernis Shape** Showerpipe 230 1jet EcoSmart with thermostat	Chrome	26097000	385.00
	Matt Black	26097670	539.00
NEW · **Vernis Shape** Showerpipe 230 1jet Green with thermostat	Chrome	26319000	385.00

Measurements within scale drawings are in mm.

Technical specifications and units of measure are subject to change.

	finish	code no.	Euro
Vernis Shape Showerpipe 230 1jet with shower thermostat project pack (2 pcs.)	Chrome	26287000	755.00

NEW

2x



- consists of: overhead shower, hand shower, shower thermostat, shower hose, slider
- overhead shower Vernis Shape 230 1jet
- shower head size overhead shower: 230 x 170 mm
- spray type overhead shower: Rain
- ball-joint: overhead shower angle adjustable
- spray type hand shower: Rain, IntenseRain
- maximum flow rate at 3 bar: 14 l/min
- minimum flow pressure: 1 bar
- operating pressure: min. 1 bar/max. 10 bar
- shower bar diameter: 19 mm
- height-adjustable slider with locking push-button slider
- shower arm length overhead shower: 426 mm
- thermostat Vernis
- safety lock at 40°C
- adjustable hot water limitation
- outlets controlled via turning handle
- mounting type: exposed installation
- connection dimension DN15
- connection thread G ½
- centre distance 150 ± 12 mm
- packaging unit: 2 pieces

Consisting of:

- **Vernis Shape** Showerpipe 230 1jet with thermostat (# 26286000)

NEW

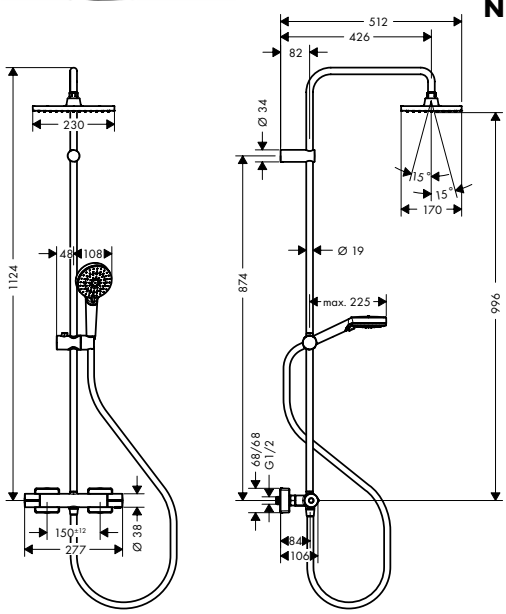

	finish	code no.	Euro

NEW



Vernis Shape Showerpipe 230 1jet with bath thermostat

Chrome | 26284000 | 500.00

Quick Clean | XXL Performance

- consists of: overhead shower, hand shower, bath thermostat, shower hose, slider
- overhead shower Vernis Shape 230 1jet
- shower head size overhead shower: 230 x 170 mm
- spray type overhead shower: Rain
- ball-joint: overhead shower angle adjustable
- spray type hand shower: Rain, IntenseRain
- maximum flow rate at 3 bar: 20 l/min
- minimum flow pressure: 1 bar
- operating pressure: min. 1 bar/max. 10 bar
- shower bar diameter: 19 mm
- height-adjustable slider with locking push-button slider
- shower arm length overhead shower: 426 mm
- thermostat Vernis
- safety lock at 40°C
- adjustable hot water limitation
- outlets controlled via turning handle
- suitable for continuous flow water heaters
- mounting type: exposed installation
- connection dimension DN15
- connection thread G ½
- centre distance 150 ± 12 mm

Consisting of:

NEW
- **Vernis Shape** Overhead shower 230 1jet (# 26281000)

NEW
- **Vernis Blend** Hand shower Vario (# 26270000)
- **Metaflex** Shower hose 160 cm (# 28266000)

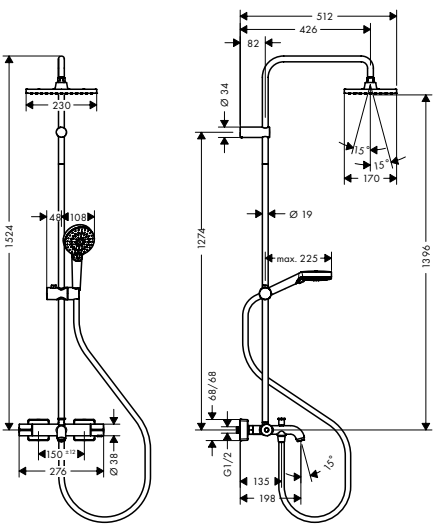

Water saving EcoSmart version:

NEW
- **Vernis Shape** Showerpipe 230 1jet EcoSmart with bath thermostat

Chrome | 26098000 | 500.00

Measurements within scale drawings are in mm.

Technical specifications and units of measure are subject to change.

	finish	code no.	Euro

NEW

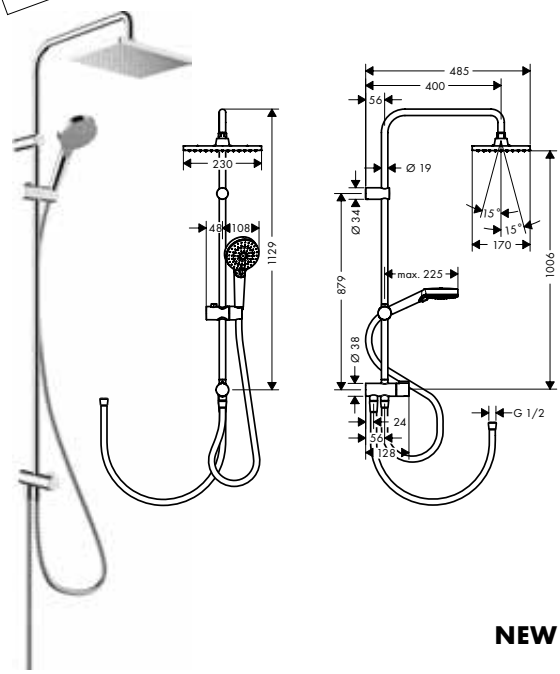

Vernis Shape Showerpipe 230 1jet Reno

	finish	code no.	Euro
	Chrome	26282000	315.00
	Matt Black	26282670	441.00

Quick Clean · XXL Performance

- consists of: overhead shower, hand shower, shower hose, hand shower holder
- overhead shower Vernis Shape 230 1jet
- shower head size overhead shower: 230 x 170 mm
- spray type overhead shower: Rain
- ball-joint: overhead shower angle adjustable
- spray type hand shower: Rain, IntenseRain
- maximum flow rate at 3 bar: 14,6 l/min
- minimum flow pressure: 1 bar
- operating pressure: min. 1 bar/max. 10 bar
- mounting type: exposed installation
- shower bar diameter: 19 mm
- height-adjustable slider with locking push-button slider
- shower arm length: 400 mm
- water connection: Metaflex shower hose 80 cm and 160 cm
- connection dimension: DN15
- connection thread G ½

Consisting of:

NEW
- **Vernis Shape** Overhead shower 230 1jet (# 26281XXX)

NEW
- **Vernis Blend** Hand shower Vario (# 26270XXX)
- **Metaflex** Shower hose 160 cm (# 28266000)
- **Isiflex** Shower hose B 80 cm (# 28278000)

Water saving EcoSmart version:

NEW

· **Vernis Shape** Showerpipe 230 1jet Reno EcoSmart	Chrome	26289000	315.00
	Matt Black	26289670	441.00

Raindance shower panels

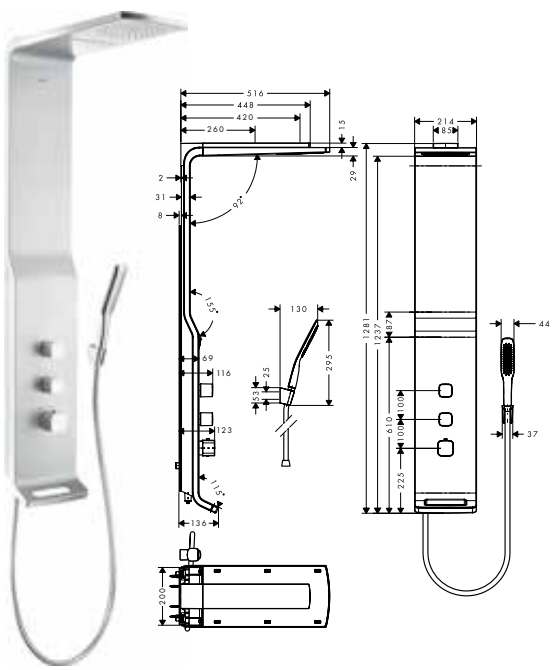

Raindance Shower panel Lift 180 2jet for exposed installation

	finish	code no.	Euro
	Satin Chrome	27008000	2,621.30
	White/Chrome	27008400	2,621.30

AirPower · Quick Clean · XXL Performance

- consists of: shower panel, overhead shower, baton hand shower, shower hose, shower holder
- overhead shower Raindance S 180 Air
- shower head size: 180 mm
- spray type (overhead shower): RainAir, wide flood jet
- shower arm length: 420 mm
- adjustable height: 200 mm
- flow rate RainAir spray (at 3 bar): 14 l/min
- flow rate RainFlow spray (at 3 bar): 17 l/min
- minimum flow pressure: 2,2 bar
- scald protection at 40°
- adjustable hot water limitation
- isolated water conduction
- centre distance: 150 ± 12 mm
- connection thread G ½
- site: wall
- mounting type: exposed installation
- suitable for continuous flow water heaters
- connection dimension: DN15

Consisting of:
- Shower holder Porter S (# 28331000)
- **Isiflex** Shower hose 160 cm (# 28276000)

Optional parts:

· **Raindance** Corner fitting set for shower panel Lift 180 2jet for exposed installation	27999000	217.80

Measurements within scale drawings are in mm.

Technical specifications and units of measure are subject to change.

Thermostatic mixers / valves





Thermostatic mixers and combis for exposed installation page 288



Thermostatic mixers for concealed installation page 308





hansgrohe thermostatic mixers

Product ranges at a glance

	ShowerTablet Select		Ecostat Select	Ecostat E
				
Finish	-000, -400	-000, -670, -700	-000, -400	-000
Standard	■	■	■	■
With bath filler	■	■	■	■
With shower holder		■		
Shelf	■	■	■	
Scald protection at 40°C	■	■	■	■
Adjustable temperature limit	■	■	■	■
EcoStop button				■
Select	■	■		
Water flow control		■		
CoolContact	■	■	■	■
	page 288	page 292	page 294	page 298

	RainSelect	Shower Select Glass	Shower Select	Shower Select S
				
Finish	-000, -140, -340, -400 -600, -670, -700, -990	-400	-000, -140, -340 -670, -700, -990	-000, -140, -340 -670, -700, -990
Standard	■	■	■	■
Tap variant			■	■
With shower holder	■		■	
Basic iBox universal		■	■	■
Scald protection at 40°C	■	■	■	■
Adjustable temperature limit	■	■	■	■
Number of outlets	2-5	1-4	1-4	1-4
Select	■	■	■	■
	page 308	page 314	page 317	page 321

■ Available

Ecostat	**Ecostat**	
		
-000, -140, -340 -670, -700, -990	-000	-000
■	■	■
■	■	■
■	■	■
■	■	■
page 299	page 305	page 306

Ecostat Square	**Ecostat E**	**Ecostat S**
		
-000, -140, -340 -670, -700, -990	-000	-000, -140, -340 -670, -700, -990
■	■	■
■	■	■
■	■	■
■	■	■
1-4	1-2	1-2
page 326	page 327	page 328

hansgrohe concealed finish sets based on the iBox universal

Concealed installation overview of functions





1 function



ShowerSelect Thermostat



ShowerSelect
Thermostat
#15762, -000
Glass surface
#15737, -400

ShowerSelect Mixer



ShowerSelect
Mixer
#15767, -000

Ecostat Thermostat



Ecostat
Thermostat
for 1 function
#15712, -000



Ecostat E
Thermostat
#15707, -000

ShowerSelect Thermostat



ShowerSelect S
Thermostat
#15744, -000

ShowerSelect Mixer



ShowerSelect S
Mixer
#15747, -000

Ecostat Thermostat



Ecostat S
Thermostat
#15757, -000

You will be able to satisfy any of your customers' requirements – and help them keep to their budgets – with hansgrohe's complete concealed range for between one and four functions. The choice starts with the operation: are the showers and spray types to be controlled conventionally by turning, or with complete ease at the touch of a button? Your customers also have complete freedom of design: the ShowerSelect is now also available in a round design and as a mixer. Ecostat thermostats are available as a circle, and now also as a square with rounded corners. Plenty of options for attractive installations that blend beautifully with the bathroom.



2 functions



ShowerSelect Thermostat



ShowerSelect
Thermostat
#15763, -000
Glass surface
#15738, -400



ShowerSelect
Thermostat
with Fixfit and Porter
#15765, -000

ShowerSelect Mixer



ShowerSelect
Mixer
#15768, -000

Ecostat Thermostat



Ecostat
Thermostat
for 2 functions
#15714, -000



Ecostat E
Thermostat
#15708, -000

ShowerSelect Thermostat



ShowerSelect S
Thermostat
#15743, -000

ShowerSelect Mixer



ShowerSelect S
Mixer
#15748, -000

Ecostat Thermostat



Ecostat S
Thermostat
#15758, -000



3 FUNCTIONS



ShowerSelect



ShowerSelect
Valve
15764, -000



ShowerSelect
Thermostat highflow
15760, -000

ShowerSelect



ShowerSelect S
Valve
15745, -000



ShowerSelect S
Thermostatic mixer highflow
15741, -000

Ecostat Thermostat mixer



Trio/Quattro S
Shut-off/ diverter valve
15932, -000



Ecostat S
Thermostatic mixer highflow
15756, -000
Thermostatic mixer
15755, -000 (not shown)



Shut-off valve S
15972, -000



4 FUNCTIONS



ShowerSelect



ShowerSelect
Valve
15764, -000



ShowerSelect
Thermostatic mixer highflow
15761, -000

ShowerSelect



ShowerSelect S
Valve
15745, -000



ShowerSelect S
Thermostatic mixer highflow
15742, -000

Ecostat Thermostatic mixer



Trio/Quattro S
Shut-off/ diverter valve
15932, -000



Shut-off valve S
15972, -000



Ecostat S
Thermostatic mixer highflow
15756, -000



Shut-off valve S
15972, -000

Thermostatic mixers and combis for exposed installation

	finish	code no.	Euro
ShowerTablet Select Thermostat 700 universal for exposed installation for 2 functions	Chrome White/Chrome	13184000 13184400	1,225.80 1,225.80



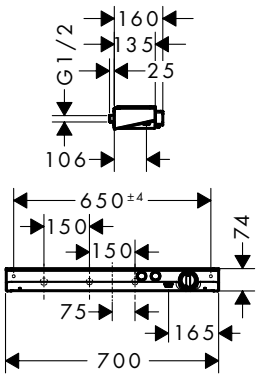

- 2 functions
- simultaneous utilization of 2 functions
- centre distance: 150 mm
- CoolContact thermostat: Prevents the housing from heating up, making showering even safer
- maximum flow rate at 3 bar: 28 l/min
- flow rate hand shower connection at 3 bar: 14 l/min
- flow rate upper outlet: 28 l/min
- Start/stop valve to operate the functions, thermostat cartridge
- safety lock at 40 °C
- temperature limitation adjustable
- with isolated water conduction
- non-return valve
- with silencer
- material handles: metal
- shelf made of safety glass
- surface of the shelf at color variant -000 = mirror glass, at color variant -400 = white glass
- control of an external shower or bath tub filler via concealed connection G ½ possible
- connection type: G ½
- connection dimension: DN15
- min. operating pressure: 1 bar
- max. operating pressure: 10 bar
- dirt filter included
- Thermostat is delivered with buttons Rain large and hand shower

Optional parts:

· **Rainmaker Select** Overhead shower 460 1jet with ceiling connector	White/Chrome	24002400	1,593.60
· **Rainmaker Select** Overhead shower 460 1jet with shower arm	White/Chrome	24003400	1,716.10

Measurements within scale drawings are in mm.

Technical specifications and units of measure are subject to change.



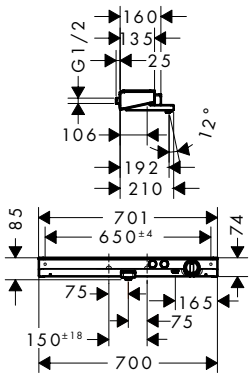

	finish	code no.	Euro
ShowerTablet Select Bath thermostat 700 for exposed installation	Chrome	13183000	1,470.80

Cool Contact · Select · AirPower · Quick Clean

- projection 192 mm
- 2 functions
- simultaneous utilization of 2 functions
- centre distance: 150 ± 18 mm
- CoolContact thermostat: Prevents the housing from heating up, making showering even safer
- maximum flow rate at 3 bar: 20 l/ min
- flow rate for bath spout at 3 bar: 20 l/ min
- flow rate of hand shower at 3 bar: 15 l/ min
- min. operating pressure: 1 bar
- max. operating pressure: 10 bar
- Start/stop valve to operate the functions, thermostat cartridge
- safety lock at 40 °C
- temperature limitation adjustable
- with isolated water conduction
- non-return valve
- protected against backflow, according to DIN EN1717
- with silencer
- material handles: metal
- shelf made of safety glass
- surface of the shelf at color variant -000 = mirror glass, at color variant -400 = white glass
- connection type: G ½
- connection dimension: DN15
- dirt filter included
- Thermostat is delivered with buttons hand shower and bath tub

Measurements within scale drawings are in mm.



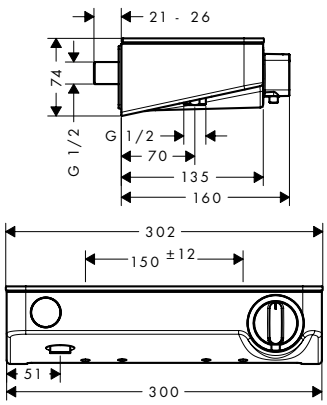

	finish	code no.	Euro
ShowerTablet Select Shower thermostat 300 for exposed installation	Chrome	13171000	488.60
	White/Chrome	13171400	488.60

Cool Contact · Select

- 1 function
- centre distance: 150 ± 12 mm
- CoolContact thermostat: Prevents the housing from heating up, making showering even safer
- maximum flow rate at 3 bar: 14 l/min
- flow rate hand shower connection at 3 bar: 14 l/min
- thermostat cartridge, Start/stop valve to operate the functions
- safety lock at 40 °C
- temperature limitation adjustable
- with isolated water conduction
- non-return valve
- with silencer
- material handles: metal
- shelf made of safety glass
- surface of the shelf at color variant -000 = mirror glass, at color variant -400 = white glass
- in case of installation on existing G ¾ connections, adaptor # 02026000 must be used
- connection type: G ½
- connection dimension: DN15
- min. operating pressure: 1 bar
- max. operating pressure: 10 bar
- dirt filter included
- Thermostat is delivered with button hand shower

Consisting of:
- S-Union Set (# 95772000)

Optional parts:

· S-connections adapter G ¾ for renovation	Chrome	02026000	32.20

Measurements within scale drawings are in mm.

Technical specifications and units of measure are subject to change.

	finish	code no.	Euro
ShowerTablet Select Bath thermostat 300 for exposed installation	Chrome	13151000	653.40
	White/Chrome	13151400	653.40

Cool Contact · Select · AirPower · Quick Clean



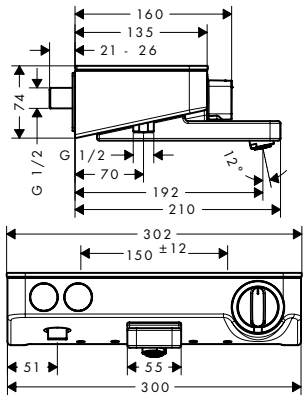

- projection 192 mm
- 2 functions
- simultaneous utilization of 2 functions
- centre distance: 150 ± 12 mm
- CoolContact thermostat: Prevents the housing from heating up, making showering even safer
- maximum flow rate at 3 bar: 20 l/ min
- flow rate for bath spout at 3 bar: 20 l/ min
- flow rate of hand shower at 3 bar: 16 l/ min
- min. operating pressure: 1 bar
- max. operating pressure: 10 bar
- thermostat cartridge, Start/stop valve to operate the functions
- safety lock at 40 °C
- temperature limitation adjustable
- with isolated water conduction
- non-return valve
- protected against backflow, according to DIN EN1717
- with silencer
- material handles: metal
- shelf made of safety glass
- surface of the shelf at color variant -000 = mirror glass, at color variant -400 = white glass
- in case of installation on existing G ¾ connections, adaptor # 02026000 must be used
- connection type: G ½
- connection dimension: DN15
- dirt filter included
- Thermostat is delivered with buttons hand shower and bath tub

Consisting of:
- S-Union Set (# 95772000)

Optional parts:

· S-connections adapter G ¾ for renovation	Chrome	02026000	32.20



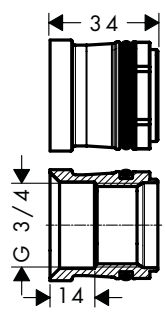

S-connections adapter G ¾ for renovation — Chrome — 02026000 — 32.20

- installation type: exposed installation
- adapter for installation on existing s-unions G ½ x G ¾
- connection dimension G ¾

Measurements within scale drawings are in mm.

	finish	code no.	Euro
ShowerTablet Select Shower thermostat 400 for exposed installation	Chrome	24360000	341.40
	Matt Black	24360670	443.80
	Matt White	24360700	443.80

NEW



Water Flow Control · Cool Contact · Select

available from April 2022

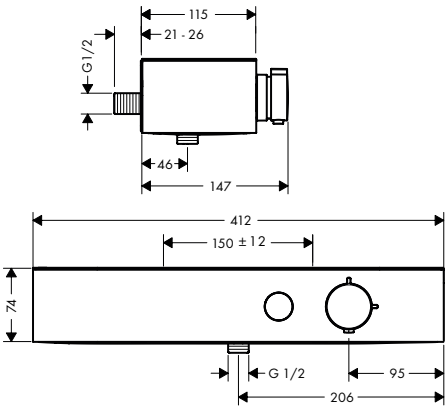

- the volume control regulates up to 30% of the water flow
- 1 function
- temperature and volume control
- centre distance: 150 ± 12 mm
- CoolContact thermostat: Prevents the housing from heating up, making showering even safer
- maximum flow rate at 3 bar: 16,7 l/ min
- safety lock at 40 °C
- temperature limitation adjustable
- with isolated water conduction
- non-return valve
- with silencer
- suitable for continous flow water heaters
- material handles: plastic
- shelf made of plastic
- shelf finish: Matt Black
- connection type: G ½
- dirt filter included
- Thermostat is delivered with button hand shower

ShowerTablet Select Bath thermostat 400 for exposed installation	Chrome	24340000	412.70
	Matt Black	24340670	536.50
	Matt White	24340700	536.50

NEW



Rotatable Bath Spout · Water Flow Control · Cool Contact · Select

available from April 2022

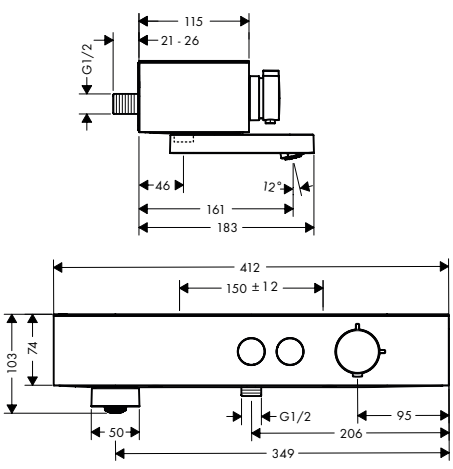

- rotatable bath spout
- the volume control regulates up to 30% of the water flow
- 2 functions
- simultaneous utilization of 2 functions
- temperature and volume control
- Select push-button on/off control for 2 outlets
- centre distance: 150 ± 12 mm
- CoolContact thermostat: Prevents the housing from heating up, making showering even safer
- safety lock at 40 °C
- temperature limitation adjustable
- with isolated water conduction
- non-return valve
- protected against backflow, according to DIN EN1717
- with silencer
- suitable for continous flow water heaters
- shelf made of plastic
- connection type: G ½
- connection dimension: DN15
- dirt filter included
- Thermostat is delivered with buttons hand shower and bath tub

Measurements within scale drawings are in mm.

Technical specifications and units of measure are subject to change.

	finish	code no.	Euro

NEW





Pulsify Select S Shower system 105 3jet Relaxation with hand shower, thermostat, shower bar 65 cm, slider and shower hose

Chrome | 24260000 | 430.00

Push slider · Cool Contact · Select · XXL Performance

available from April 2022

- consists of: hand shower, shower thermostat, shower bar, slider, shower hose
- shower head size: 105 mm
- convenient diversion via Select button
- spray type hand shower: PowderRain, IntenseRain, Massage spray
- maximum flow rate at 3 bar: 11,4 l/ min
- profile stand pipe: round
- shower bar diameter: 22 mm
- pivot connector prevent hose from tangling
- CoolContact thermostat: Prevents the housing from heating up, making showering even safer

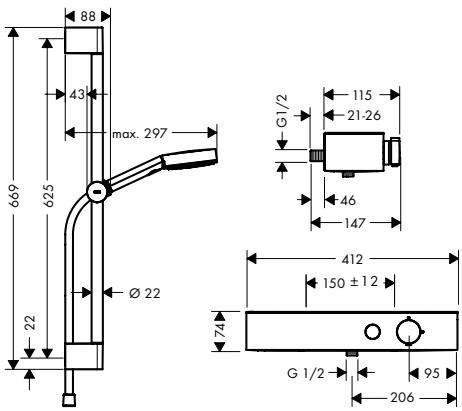

Consisting of:

NEW
- **Pulsify Select S** Hand shower 105 3jet Relaxation (# 24110000)

NEW
- **ShowerTablet Select** Shower thermostat 400 for exposed installation (# 24360000)

NEW
- **Unica** Shower bar Pulsify S 65 cm with push slider and Isiflex shower hose 160 cm (# 24400000)

Alternative sizes:

NEW
- **Pulsify Select S** Shower system 105 3jet Relaxation with hand shower, thermostat, shower bar 90 cm, slider and shower hose — Chrome | 24270000 | 445.00

Measurements within scale drawings are in mm.

Technical specifications and units of measure are subject to change.



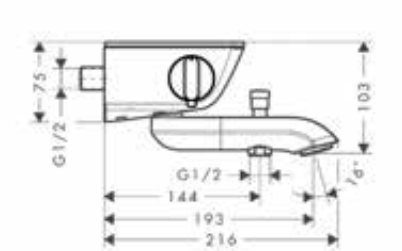

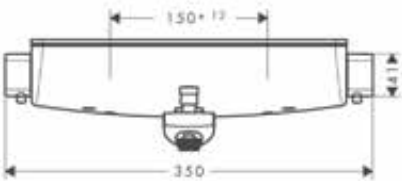

	finish	code no.	Euro
Ecostat Select Bath thermostat for exposed installation	Chrome	13141000	488.60
	White/Chrome	13141400	488.60

Cool Contact · AirPower · Quick Clean

- projection 193 mm
- 2 functions
- centre distance: 150 ± 12 mm
- CoolContact thermostat: Prevents the housing from heating up, making showering even safer
- maximum flow rate at 3 bar: 20 l/ min
- flow rate for bath spout at 3 bar: 20 l/ min
- flow rate of hand shower at 3 bar: 12 l/ min
- min. operating pressure: 1 bar
- max. operating pressure: 10 bar
- thermostat cartridge, ceramic valve 180°
- safety lock at 40 °C
- temperature limitation adjustable
- with isolated water conduction
- non-return valve
- protected against backflow, according to DIN EN1717
- with silencer
- material handles: metal
- shelf made of safety glass
- in case of installation on existing G ¾ connections, adaptor # 02026000 must be used
- surface of the shelf at color variant -000 = mirror glass, at color variant -400 = white glass
- connection type: s-shaped connections
- connection dimension: DN15
- dirt filter included

Consisting of:
- S-Union Set (# 95772000)

Optional parts:

· S-connections adapter G ¾ for renovation	Chrome	02026000	32.20

Measurements within scale drawings are in mm.

Technical specifications and units of measure are subject to change.



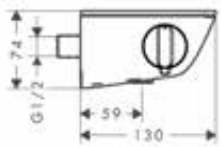

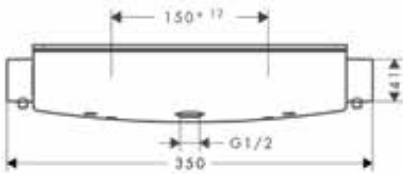

	finish	code no.	Euro
Ecostat Select Shower thermostat for exposed installation	Chrome	13161000	376.30
	White/Chrome	13161400	376.30

Cool Contact

- 1 function
- volume control for 1 outlet
- centre distance: 150 ± 12 mm
- CoolContact thermostat: Prevents the housing from heating up, making showering even safer
- EcoStop button limits the water consumption to 10 l/min
- maximum flow rate at 3 bar: 12 l/min
- flow rate hand shower connection at 3 bar: 12 l/min
- thermostat cartridge, ceramic valve 180°
- safety lock at 40 °C
- temperature limitation adjustable
- with isolated water conduction
- non-return valve
- with silencer
- shelf made of safety glass
- in case of installation on existing G ¾ connections, adaptor # 02026000 must be used
- surface of the shelf at color variant -000 = mirror glass, at color variant -400 = white glass
- connection type: s-shaped connections
- connection dimension: DN15
- min. operating pressure: 1 bar
- max. operating pressure: 10 bar
- dirt filter included

Consisting of:
- S-Union Set (# 95772000)

Optional parts:

· S-connections adapter G ¾ for renovation	Chrome	02026000	32.20

Measurements within scale drawings are in mm.



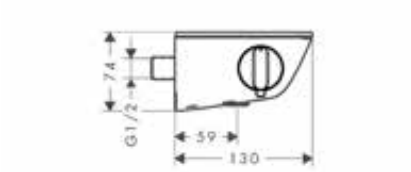

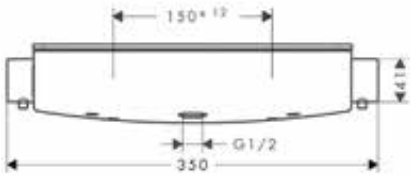

Ecostat Select Shower thermostat for exposed installation renovation

- 1 function
- volume control for 1 outlet
- centre distance: 150 ± 12 mm
- CoolContact thermostat: Prevents the housing from heating up, making showering even safer
- EcoStop button limits the water consumption to 10 l/ min
- maximum flow rate at 3 bar: 12 l/ min
- flow rate hand shower connection at 3 bar: 12 l/ min
- thermostat cartridge, ceramic valve 180°
- safety lock at 40 °C
- temperature limitation adjustable
- with isolated water conduction
- non-return valve
- with silencer
- material handles: metal
- shelf made of safety glass
- surface of the shelf at color variant -000 = mirror glass, at color variant -400 = white glass
- for installation on existing G ½ connections
- connection type: s-shaped connections
- connection dimension: DN15
- min. operating pressure: 1 bar
- max. operating pressure: 10 bar
- dirt filter included

Consisting of:

- S-connections adapter G ¾ for renovation (# 02026000)
- S-Union Set (# 95772000)

finish	code no.	Euro
Chrome	13111000	376.30
White/Chrome	13111400	376.30

Cool Contact | EcoSmart

Measurements within scale drawings are in mm.

Technical specifications and units of measure are subject to change.



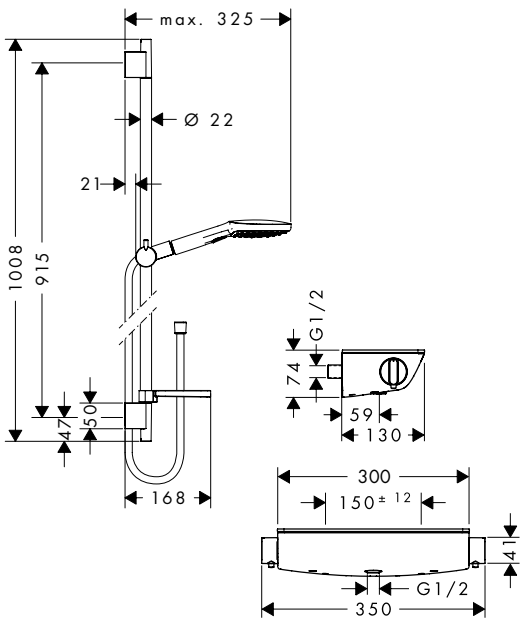

	finish	code no.	Euro
Raindance Select E Shower system for exposed installation 120 with Ecostat Select thermostat and shower bar 90 cm	Chrome	27039000	509.00
	White/Chrome	27039400	509.00

Cool Contact · Select · AirPower · XXL Performance

- consists of: hand shower, shower thermostat, shower bar, slider, soap dish, shower hose
- shower head size: 120 mm
- convenient diversion via Select button
- spray type hand shower: Rain, RainAir, Whirl
- maximum flow rate at 3 bar: 13,8 l/min
- minimum flow pressure: 1 bar
- profile stand pipe: round
- shower bar diameter: 22 mm
- pivot connector prevent hose from tangling
- 90° position adjustable hand shower holder, pivots left and right, up and down
- in case of installation on existing G ¾ connections, adaptor # 02026000 must be used
- CoolContact thermostat: Prevents the housing from heating up, making showering even safer

Consisting of:

- **Ecostat Select** Shower thermostat for exposed installation (# 13161XXX)
- **Raindance Select E** Hand shower 120 3jet (# 26520XXX)
- **Unica** Shower bar S Puro 90 cm with Isiflex shower hose 160 cm (# 28631000)
- **Casetta** Soap dish E (# 26519000)

Alternative sizes:

· **Raindance Select E** Shower system for exposed installation 120 with Ecostat Select thermostat and shower bar 65 cm	Chrome	27038000	501.10
	White/Chrome	27038400	501.10

Optional parts:

· S-connections adapter G ¾ for renovation	Chrome	02026000	32.20

Measurements within scale drawings are in mm.

Technical specifications and units of measure are subject to change.

	finish	code no.	Euro
Raindance Select S Shower system for exposed installation 150 with Ecostat Select thermostat and shower bar 90 cm	Chrome White/Chrome	27037000 27037400	559.00 559.00



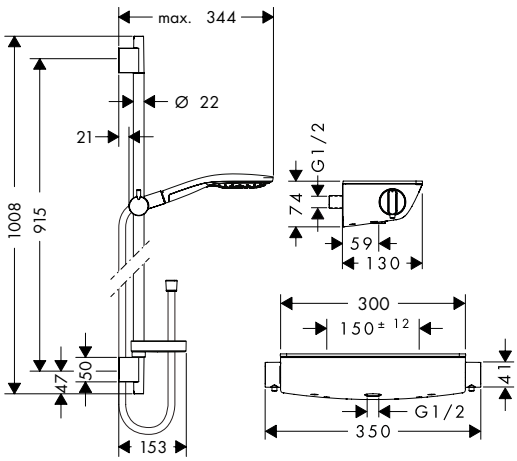

- consists of: hand shower, shower thermostat, shower bar, slider, soap dish, shower hose
- shower head size: 150 mm
- convenient diversion via Select button
- spray type hand shower: RainAir, CaresseAir, Mix
- maximum flow rate at 3 bar: 16 l/ min
- minimum flow pressure: 1 bar
- profile stand pipe: round
- shower bar diameter: 22 mm
- pivot connector prevent hose from tangling
- 90° position adjustable hand shower holder, pivots left and right, up and down
- in case of installation on existing G ¾ connections, adaptor # 02026000 must be used
- CoolContact thermostat: Prevents the housing from heating up, making showering even safer

Consisting of:

- **Ecostat Select** Shower thermostat for exposed installation (# 13161XXX)
- **Raindance Select S** Hand shower 150 3jet (# 28587XXX)
- **Unica** Shower bar S Puro 90 cm with Isiflex shower hose 160 cm (# 28631000)
- **Casetta** Soap dish S Puro (# 28679000)

Alternative sizes:			
Raindance Select S Shower system for exposed installation 150 with Ecostat Select thermostat and shower bar 65 cm	Chrome White/Chrome	27036000 27036400	551.20 551.20

Optional parts:			
S-connections adapter G ¾ for renovation	Chrome	02026000	32.20

Ecostat E Shower thermostat for exposed installation	Chrome	15773000	288.90



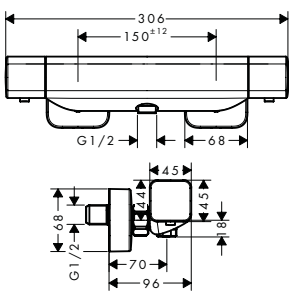

- 1 function
- centre distance: 150 ± 12 mm
- CoolContact thermostat: Prevents the housing from heating up, making showering even safer
- EcoStop button limits the water consumption to 9 l/ min
- maximum flow rate at 3 bar: 28,6 l/ min
- thermostat cartridge
- safety lock at 40 °C
- temperature limitation adjustable
- non-return valve
- with silencer
- suitable for continous flow water heaters
- material handles: metal
- connection type: s-shaped connections
- connection dimension: G ½
- min. operating pressure: 1 bar
- max. operating pressure: 10 bar
- dirt filter included

Measurements within scale drawings are in mm.

Technical specifications and units of measure are subject to change.

	finish	code no.	Euro



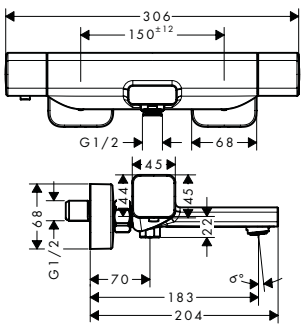

Ecostat E Bath thermostat for exposed installation

Chrome 15774000 353.10

- projection 183 mm
- 2 functions
- centre distance: 150 ± 12 mm
- CoolContact thermostat: Prevents the housing from heating up, making showering even safer
- maximum flow rate at 3 bar: 18,6 l/ min
- flow rate for bath spout at 3 bar: 18,6 l/ min
- flow rate of hand shower at 3 bar: 15,4 l/ min
- min. operating pressure: 1 bar
- max. operating pressure: 10 bar
- thermostat cartridge
- safety lock at 40 °C
- temperature limitation adjustable
- non-return valve
- protected against backflow, according to DIN EN1717
- with silencer
- material handles: metal
- connection type: s-shaped connections
- connection dimension: G ½
- dirt filter included



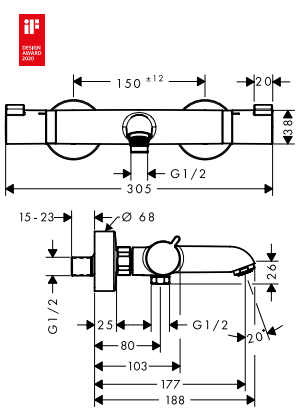

Ecostat Bath thermostat Comfort for exposed installation

Chrome	13114000	320.00
Brushed Bronze	13114140	479.90
Brushed Black Chrome	13114340	479.90
Matt Black	13114670	447.90
Matt White	13114700	447.90
Polished Gold Optic	13114990	479.90

- projection 177 mm
- 2 functions
- centre distance: 150 ± 12 mm
- spray type mixer: normal spray
- flow rate for bath spout at 3 bar: 20 l/ min
- flow rate of hand shower at 3 bar: 16 l/ min
- min. operating pressure: 1 bar
- max. operating pressure: 10 bar
- thermostat cartridge, shut-off/ diverter valve
- safety lock at 40 °C
- temperature limitation adjustable
- non-return valve
- with silencer
- material handles: metal
- connection type: s-shaped connections
- connection dimension: DN15
- dirt filter included

Measurements within scale drawings are in mm.

Technical specifications and units of measure are subject to change.



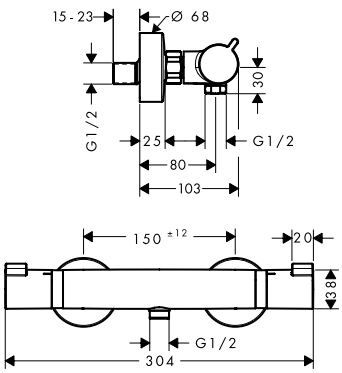

	finish	code no.	Euro
Ecostat Shower thermostat Comfort for exposed installation	Chrome	13116000	250.50
	Brushed Bronze	13116140	375.80
	Brushed Black Chrome	13116340	375.80
	Matt Black	13116670	350.60
	Matt White	13116700	350.60
	Polished Gold Optic	13116990	375.80

- 1 function
- centre distance: 150 ± 12 mm
- EcoStop button limits the water consumption to 10 l/ min
- maximum flow rate at 3 bar: 17 l/ min
- flow rate hand shower connection at 3 bar: 17 l/ min
- thermostat cartridge, ceramic valve 180°
- safety lock at 40 °C
- temperature limitation adjustable
- non-return valve
- with silencer
- material handles: metal
- connection type: s-shaped connections
- connection dimension: DN15
- min. operating pressure: 1 bar
- max. operating pressure: 10 bar
- dirt filter included



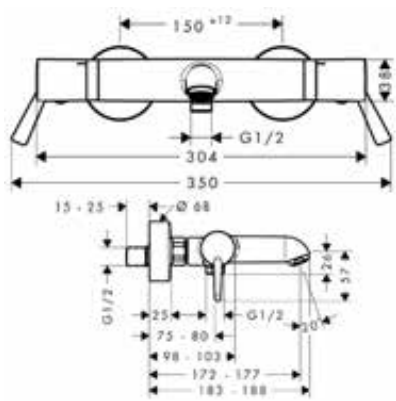

Ecostat Bath thermostat Comfort Care for exposed installation with extra long handles	Chrome	13115000	345.10

Quick Clean

- larger print for greater clarity
- with extra long barrier-free handles
- projection 172 - 177 mm
- 2 functions
- centre distance: 150 ± 12 mm
- flow rate for bath spout at 3 bar: 23 l/ min
- flow rate of hand shower at 3 bar: 15 l/ min
- min. operating pressure: 1 bar
- max. operating pressure: 10 bar
- thermostat cartridge, shut-off/ diverter valve
- safety lock at 40 °C
- temperature limitation adjustable
- non-return valve
- with silencer
- material handles: metal
- connection type: s-shaped connections
- connection dimension: DN15
- dirt filter included

Measurements within scale drawings are in mm.

Technical specifications and units of measure are subject to change.

	finish	code no.	Euro



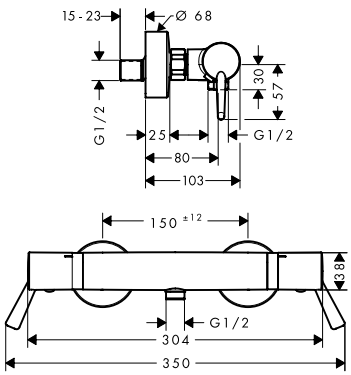

Ecostat Shower thermostat Comfort Care for exposed installation with extra long handles

Chrome | 13117000 | 275.60

- larger print for greater clarity
- with extra long barrier-free handles
- 1 function
- centre distance: 150 ± 12 mm
- flow rate hand shower connection at 3 bar: 17 l/ min
- thermostat cartridge, ceramic valve 180°
- safety lock at 40 °C
- temperature limitation adjustable
- non-return valve
- with silencer
- material handles: metal
- connection type: s-shaped connections
- connection dimension: DN15
- min. operating pressure: 1 bar
- max. operating pressure: 10 bar
- dirt filter included



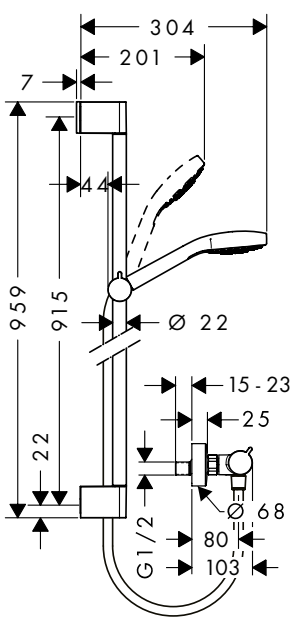

Croma Select E Shower system for exposed installation Vario with Ecostat Comfort thermostat and shower bar 90 cm

White/Chrome | 27082400 | 295.20

- consists of: hand shower, shower thermostat, shower bar, slider, shower hose
- shower head size: 110 mm
- convenient diversion via Select button
- spray type hand shower: Rain, TurboRain, IntenseRain
- maximum flow rate at 3 bar: 15 l/ min
- minimum flow pressure: 1 bar
- profile stand pipe: round
- shower bar diameter: 22 mm
- pivot connector prevent hose from tangling
- hand shower holder inclination angle can be adjusted by 45°

Consisting of:

- **Ecostat** Shower thermostat Comfort for exposed installation (# 13116000)
- **Croma Select E** Hand shower Vario (# 26812400)
- **Unica** Shower bar Croma 90 cm (# 26506000)
- **Isiflex** Shower hose 160 cm (# 28276000)

Alternative sizes:

- **Croma Select E** Shower system for exposed installation Vario with Ecostat Comfort thermostat and shower bar 65 cm

White/Chrome | 27081400 | 289.10

Measurements within scale drawings are in mm.

	finish	code no.	Euro



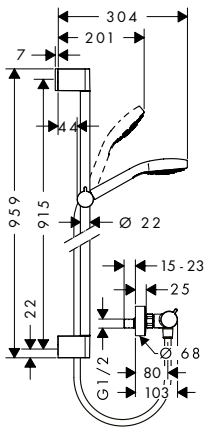

Croma Select S Shower system for exposed installation Vario with Ecostat Comfort thermostat and shower bar 90 cm

White/Chrome — 27014400 — 295.20

- consists of: hand shower, shower thermostat, shower bar, slider, shower hose
- shower head size: 110 mm
- convenient diversion via Select button
- spray type hand shower: Rain, IntenseRain, TurboRain
- maximum flow rate at 3 bar: 15 l/ min
- minimum flow pressure: 1 bar
- profile stand pipe: round
- shower bar diameter: 22 mm
- pivot connector prevent hose from tangling
- hand shower holder inclination angle can be adjusted by 45°

Consisting of:
- **Croma Select S** Hand shower Vario (# 26802400)
- **Unica** Shower bar Croma 90 cm with Isiflex shower hose 160 cm (# 26504000)
- **Ecostat** Shower thermostat Comfort for exposed installation (# 13116000)

Alternative sizes:
- **Croma Select S** Shower system for exposed installation Vario with Ecostat Comfort thermostat and shower bar 65 cm — White/Chrome — 27013400 — 289.10



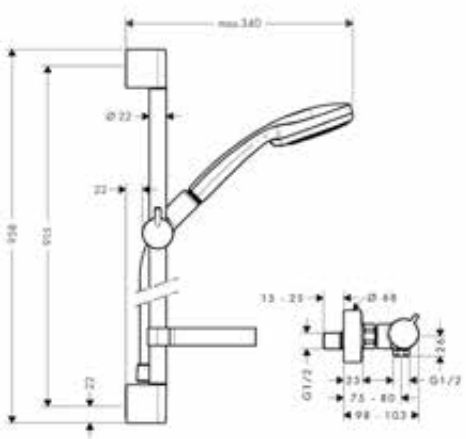

Croma 100 Shower system for exposed installation Multi with Ecostat Comfort thermostat and shower bar 90 cm

Chrome — 27085000 — 357.90

- consists of: hand shower, shower thermostat, shower bar, slider, soap dish, shower hose
- spray type overhead shower: Rain, MonoRain, Massage spray
- spray type adjustment by turning spray disc
- maximum flow rate at 3 bar: 17 l/ min
- minimum flow pressure: 1 bar
- profile stand pipe: round
- shower bar diameter: 22 mm
- pivot connector prevent hose from tangling
- 90° position adjustable hand shower holder, pivots left and right, up and down

Consisting of:
- **Ecostat** Shower thermostat Comfort for exposed installation (# 13116000)
- **Croma 100** Hand shower Multi (# 28536000)
- **Unica** Shower bar C 90 cm with Isiflex shower hose 160 cm (# 27610000)
- **Casetta** Soap dish C (# 28678000)

Alternative sizes:
- **Croma 100** Shower system for exposed installation Multi with Ecostat Comfort thermostat and shower bar 65 cm — Chrome — 27086000 — 333.80

Optional parts:
- Wall bar spacer — Chrome — 97450000 — 8.70

Measurements within scale drawings are in mm.

Technical specifications and units of measure are subject to change.



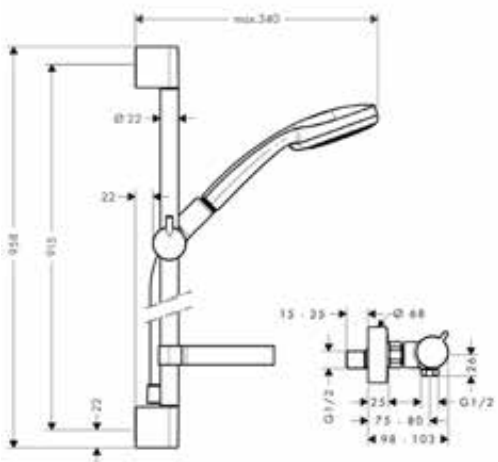

	finish	code no.	Euro
Croma 100 Shower system for exposed installation Vario with Ecostat Comfort thermostat and shower bar 90 cm · consists of: hand shower, shower thermostat, shower bar, slider, soap dish, shower hose · shower head size: 100 mm · spray type adjustment by turning spray disc · spray type hand shower: normal spray, Rain, Massage spray, Shampoo spray · maximum flow rate at 3 bar: 18 l/ min · minimum flow pressure: 1 bar · profile stand pipe: round · shower bar diameter: 22 mm · pivot connector prevent hose from tangling · 90° position adjustable hand shower holder, pivots left and right, up and down	Chrome	27035000	334.20
Consisting of: · **Croma 100** Hand shower Vario (# 28535000) · **Unica** Shower bar C 90 cm with Isiflex shower hose 160 cm (#) · **Ecostat** Shower thermostat Comfort for exposed installation (# 13116000) · **Casetta** Soap dish C (# 28678000)			
Alternative sizes: · **Croma 100** Shower system for exposed installation Vario with Ecostat Comfort thermostat and shower bar 65 cm	Chrome	27034000	327.10
Water saving EcoSmart version: · **Croma 100** Shower system for exposed installation Vario EcoSmart 9 l/ min with Ecostat Comfort thermostat and shower bar 90 cm	Chrome	27033000	340.00
Optional parts: · Wall bar spacer	Chrome	97450000	8.70

Measurements within scale drawings are in mm.



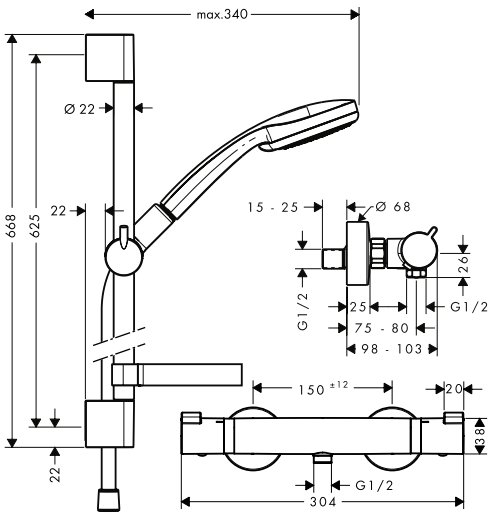

	finish	code no.	Euro
Croma 100 Shower system for exposed installation Vario with Ecostat Comfort thermostat and shower bar 65 cm · consists of: hand shower, shower thermostat, shower bar, slider, soap dish, shower hose · shower head size: 100 mm · spray type adjustment by turning spray disc · spray type hand shower: normal spray, Rain, Massage spray, Shampoo spray · maximum flow rate at 3 bar: 18 l/min · minimum flow pressure: 1 bar · profile stand pipe: round · shower bar diameter: 22 mm · pivot connector prevent hose from tangling · 90° position adjustable hand shower holder, pivots left and right, up and down **Consisting of:** · **Ecostat** Shower thermostat Comfort for exposed installation (# 13116000) · **Croma 100** Hand shower Vario (# 28535000) · **Unica** Shower bar C 65 cm with Isiflex shower hose 160 cm (# 27611000) · **Casetta** Soap dish C (# 28678000)	Chrome	27034000	327.10
Alternative sizes: · **Croma 100** Shower system for exposed installation Vario with Ecostat Comfort thermostat and shower bar 90 cm	Chrome	27035000	334.20
Water saving EcoSmart version: · **Croma 100** Shower system for exposed installation Vario EcoSmart 9 l/min with Ecostat Comfort thermostat and shower bar 65 cm	Chrome	27032000	332.90

Measurements within scale drawings are in mm.

Technical specifications and units of measure are subject to change.

	finish	code no.	Euro



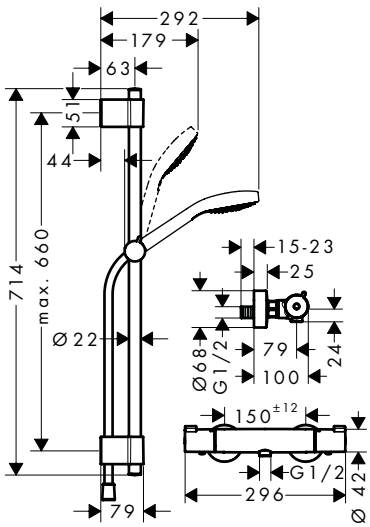

Croma Select S Shower system for exposed installation Vario with Ecostat 1001 CL thermostat and shower bar 72 cm

White/Chrome | 27833400 | 248.40

- consists of: hand shower, shower thermostat, shower bar, slider, shower hose
- shower head size: 110 mm
- convenient diversion via Select button
- spray type hand shower: Rain, IntenseRain, TurboRain
- maximum flow rate at 3 bar: 14,7 l/ min
- minimum flow pressure: 1,2 bar
- profile stand pipe: round
- shower bar diameter: 22 mm
- variable drilling hole distance: 400 - 660 mm
- pivot connector prevent hose from tangling
- 90° position adjustable hand shower holder, pivots left and right, up and down
- wall supports of plastic

Consisting of:

- **Croma Select S** Hand shower Vario (# 26802400)
- **Ecostat** Shower thermostat 1001 CL for exposed installation (# 13211000)
- **Unica** Shower bar Varia 72 cm (# 27355000)
- **Isiflex** Shower hose 160 cm (# 28276000)



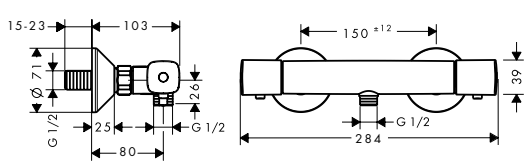

Ecostat Shower thermostat universal for exposed installation

Chrome | 13122000 | 224.90

- 1 function
- centre distance: 150 ± 12 mm
- EcoStop button limits the water consumption to 10 l/ min
- maximum flow rate at 3 bar: 17 l/ min
- flow rate hand shower connection at 3 bar: 16 l/ min
- thermostat cartridge, ceramic valve 180°
- safety lock at 40 °C
- temperature limitation adjustable
- non-return valve
- with silencer
- connection type: s-shaped connections
- connection dimension: DN15
- min. operating pressure: 1 bar
- max. operating pressure: 10 bar
- dirt filter included

Measurements within scale drawings are in mm.

Technical specifications and units of measure are subject to change.

	finish	code no.	Euro



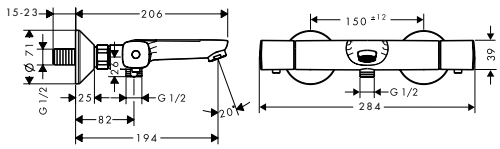

Ecostat Bath thermostat universal for exposed installation — Chrome — 13123000 — 287.40

AirPower · Quick Clean

- projection 194 mm
- 2 functions
- centre distance: 150 ± 12 mm
- flow rate for bath spout at 3 bar: 20 l/ min
- flow rate of hand shower at 3 bar: 16 l/ min
- min. operating pressure: 1 bar
- max. operating pressure: 10 bar
- thermostat cartridge, shut-off/ diverter valve
- safety lock at 40 °C
- temperature limitation adjustable
- non-return valve
- with silencer
- connection type: s-shaped connections
- connection dimension: DN15
- dirt filter included



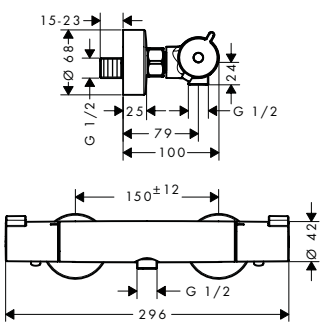

Ecostat Shower thermostat 1001 CL for exposed installation — Chrome — 13211000 — 175.70

- 1 function
- centre distance: 150 ± 12 mm
- EcoStop button limits the water consumption to 10 l/ min
- maximum flow rate at 3 bar: 16 l/ min
- flow rate hand shower connection at 3 bar: 16 l/ min
- thermostat cartridge, ceramic valve 180°
- safety lock at 40 °C
- temperature limitation adjustable
- non-return valve
- with silencer
- material handles: metal
- connection type: s-shaped connections
- connection dimension: DN15
- min. operating pressure: 1 bar
- max. operating pressure: 10 bar
- dirt filter included



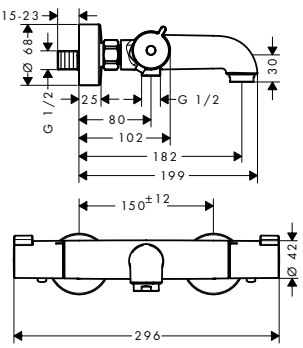

Ecostat Bath thermostat 1001 CL for exposed installation — Chrome — 13201000 — 222.90

AirPower

- projection 182 mm
- 2 functions
- centre distance: 150 ± 12 mm
- spray type mixer: normal spray
- maximum flow rate at 3 bar: 20 l/ min
- flow rate for bath spout at 3 bar: 20 l/ min
- flow rate of hand shower at 3 bar: 16 l/ min
- min. operating pressure: 1 bar
- max. operating pressure: 10 bar
- thermostat cartridge, shut-off valve
- safety lock at 40 °C
- temperature limitation adjustable
- non-return valve
- with silencer
- material handles: metal
- connection type: s-shaped connections
- connection dimension: DN15
- dirt filter included

Measurements within scale drawings are in mm.

Technical specifications and units of measure are subject to change.

	finish	code no.	Euro



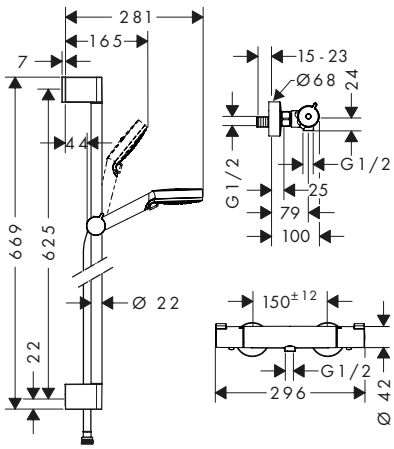

Crometta Shower system for exposed installation Vario with Ecostat 1001 CL thermostat and shower bar 65 cm

	White/Chrome	27812400	218.00

XXL Performance

- consists of: hand shower, shower thermostat, shower bar, slider, shower hose
- spray type overhead shower: Rain, IntenseRain
- spray type adjustment by turning spray disc
- maximum flow rate at 3 bar: 14 l/ min
- minimum flow pressure: 1 bar
- shower bar diameter: 22 mm
- pivot connector prevent hose from tangling
- 90° position adjustable hand shower holder, pivots left and right, up and down

Consisting of:

- **Crometta** Hand shower Vario (# 26330400)
- **Ecostat** Shower thermostat 1001 CL for exposed installation (# 13211000)
- **Unica** Shower bar Croma 65 cm (# 26505000)
- **Isiflex** Shower hose 160 cm (# 28276000)

Alternative sizes:

Crometta Shower system for exposed installation Vario with Ecostat 1001 CL thermostat and shower bar 90 cm	White/Chrome	27813400	227.40

Thermostatic mixer for exposed installation



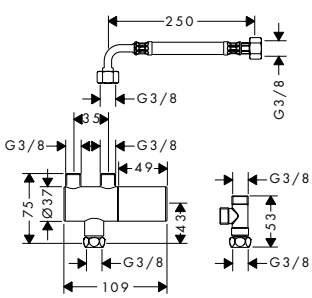

Ecostat Under-basin thermostat for exposed installation

	Chrome	15346000	277.40

- temperature limitation adjustable
- the thermostat offers the possibility for thermal disinfection
- non-return valve
- connection dimension: G ⅜
- min. operating pressure: 1 bar
- max. operating pressure: 5 bar

Measurements within scale drawings are in mm.

RainSelect thermostatic mixers for concealed installation



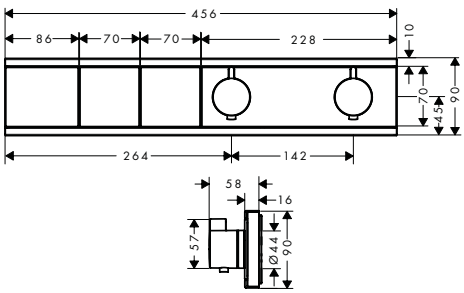

RainSelect Thermostat for concealed installation for 2 functions

finish	code no.	Euro
Chrome	15380000	1,154.40
Brushed Bronze	15380140	1,731.60
Brushed Black Chrome	15380340	1,731.60
Matt Black	15380670	1,500.60
Matt White	15380700	1,500.60
Polished Gold Optic	15380990	1,731.60

Select

- depending on volume flow and installation situation approx. 50% flow rate reduction and integrated shut off function
- 2 functions
- Select push-button on/off control for 2 outlets
- simultaneous use of several outlets
- maximum flow rate at 3 bar: 19,6 l/ min
- thermostat cartridge, Start/stop valve to operate the functions
- safety lock at 40 °C
- temperature limitation adjustable
- non-return valve
- connection type: basic set
- min. operating pressure: 1 bar
- max. operating pressure: 10 bar
- Thermostat is delivered with buttons handshower and PowderRain

Required parts:

- **RainSelect** Basic set for 2 functions — 15310180 — 630.00



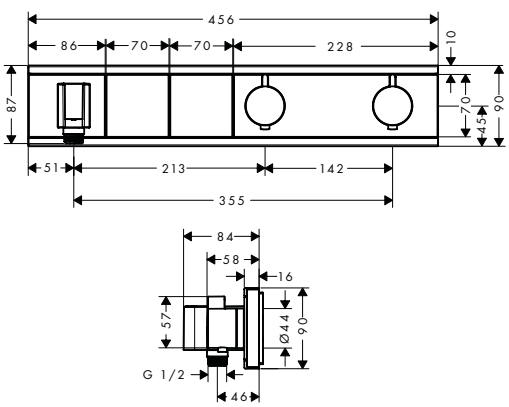

RainSelect Thermostat for concealed installation for 2 functions with integrated shower holder

Chrome	15355000	1,256.30
White/Chrome	15355400	1,256.30
Black/Chrome	15355600	1,256.30

Select

- consists of: Thermostat, shower holder
- depending on volume flow and installation situation approx. 50% flow rate reduction and integrated shut off function
- 2 functions
- Select push-button on/off control for 2 outlets
- simultaneous use of several outlets
- maximum flow rate at 3 bar: 38 l/ min
- flow rate per outlet: 26 l/ min
- flow rate by simultaneous use of all outlets: 38 l/ min
- thermostat cartridge, Start/stop valve to operate the functions
- safety lock at 40 °C
- temperature limitation adjustable
- non-return valve
- hose nut: for shower hoses with conical or cylindrical nut on both sides
- connection type: basic set
- min. operating pressure: 1 bar
- max. operating pressure: 10 bar
- Thermostat is delivered with buttons Rain large and hand shower

Required parts:

- **RainSelect** Basic set for 2 functions — 15310180 — 630.00

Measurements within scale drawings are in mm.

Technical specifications and units of measure are subject to change.

	finish	code no.	Euro



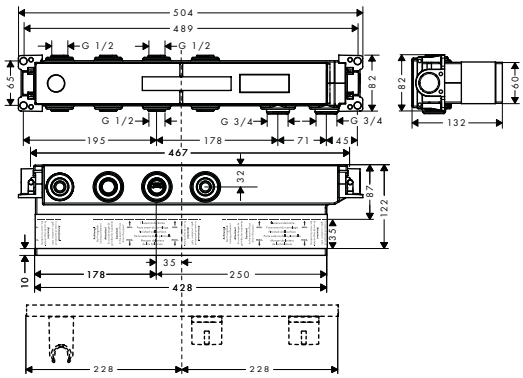

RainSelect Basic set for 2 functions

15310180 630.00

- 2 functions
- connection thread Rp ¾
- installation depth: 87 - 122 mm
- horizontal installation
- sound-decoupled installation
- connection dimension: DN15/DN20



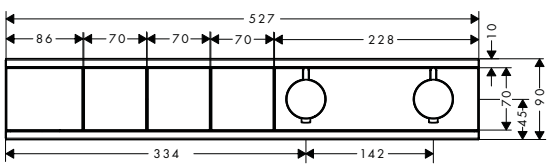

RainSelect Thermostat for concealed installation for 3 functions

Chrome 15381000 1,371.20
Matt White 15381700 1,782.40

Select

- depending on volume flow and installation situation approx. 50% flow rate reduction and integrated shut off function
- 3 functions
- Select push-button on/off control for 3 outlets
- simultaneous use of several outlets
- maximum flow rate at 3 bar: 18,5 l/min
- thermostat cartridge, Start/stop valve to operate the functions
- safety lock at 40 °C
- temperature limitation adjustable
- non-return valve
- connection type: basic set
- min. operating pressure: 1 bar
- max. operating pressure: 10 bar
- Thermostat is delivered with buttons handshower, PowderRain, shoulder shower

Required parts:

- **RainSelect** Basic set for 3 functions 15311180 735.00

Measurements within scale drawings are in mm.

Technical specifications and units of measure are subject to change.



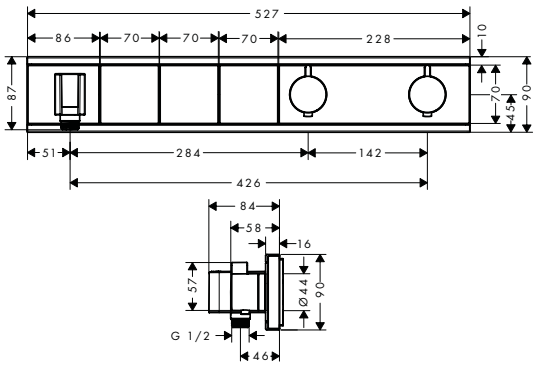

	finish	code no.	Euro
RainSelect Thermostat for concealed installation for 3 functions with integrated shower holder	Chrome	15356000	1,484.70
	White/Chrome	15356400	1,484.70
	Black/Chrome	15356600	1,484.70

· consists of: Thermostat, shower holder
· depending on volume flow and installation situation approx. 50% flow rate reduction and integrated shut off function
· 3 functions
· Select push-button on/off control for 3 outlets
· simultaneous use of several outlets
· maximum flow rate at 3 bar: 38 l/ min
· flow rate per outlet: 26 l/ min
· flow rate by simultaneous use of all outlets: 38 l/ min
· thermostat cartridge, Start/stop valve to operate the functions
· safety lock at 40 °C
· temperature limitation adjustable
· non-return valve
· hose nut: for shower hoses with conical or cylindrical nut on both sides
· connection type: basic set
· min. operating pressure: 1 bar
· max. operating pressure: 10 bar
· Thermostat is delivered with buttons hand shower, Waterfall, Rain large

Required parts:

· **RainSelect** Basic set for 3 functions	15311180	735.00



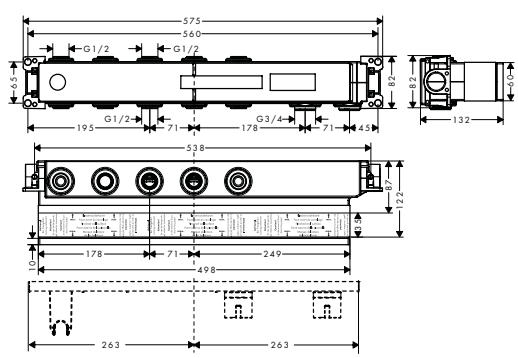

RainSelect Basic set for 3 functions	15311180	735.00

· 3 functions
· connection thread Rp ¾
· installation depth: 87 - 122 mm
· horizontal installation
· sound-decoupled installation
· connection dimension: DN15/DN20

Measurements within scale drawings are in mm.

Technical specifications and units of measure are subject to change.



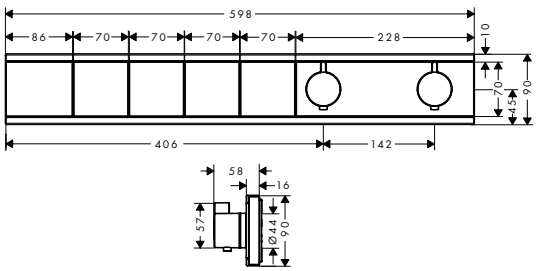

RainSelect Thermostat for concealed installation for 4 functions

- depending on volume flow and installation situation approx. 50% flow rate reduction and integrated shut off function
- 4 functions
- Select push-button on/off control for 4 outlets
- simultaneous use of several outlets
- maximum flow rate at 3 bar: 38 l/ min
- flow rate per outlet: 26 l/ min
- flow rate by simultaneous use of all outlets: 38 l/ min
- thermostat cartridge, Start/stop valve to operate the functions
- safety lock at 40 °C
- temperature limitation adjustable
- non-return valve
- connection type: basic set
- min. operating pressure: 1 bar
- max. operating pressure: 10 bar
- Thermostat is delivered with buttons handshower, PowderRain, Waterfall, Rain large

finish	code no.	Euro
Chrome	15382000	1,587.90
Brushed Bronze	15382140	2,381.90
Brushed Black Chrome	15382340	2,381.90
Matt Black	15382670	2,064.30
Matt White	15382700	2,064.30
Polished Gold Optic	15382990	2,381.90

Required parts:

· **RainSelect** Basic set for 4 functions	15312180	840.00



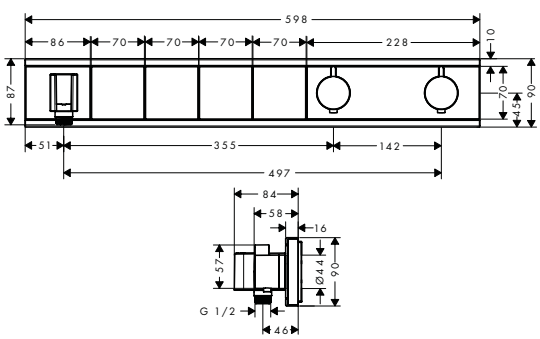

RainSelect Thermostat for concealed installation for 4 functions with integrated shower holder

- consists of: Thermostat, shower holder
- depending on volume flow and installation situation approx. 50% flow rate reduction and integrated shut off function
- 4 functions
- Select push-button on/off control for 4 outlets
- simultaneous use of several outlets
- maximum flow rate at 3 bar: 38 l/ min
- flow rate per outlet: 26 l/ min
- flow rate by simultaneous use of all outlets: 38 l/ min
- thermostat cartridge, Start/stop valve to operate the functions
- safety lock at 40 °C
- temperature limitation adjustable
- non-return valve
- hose nut: for shower hoses with conical or cylindrical nut on both sides
- connection type: basic set
- min. operating pressure: 1 bar
- max. operating pressure: 10 bar
- Thermostat is delivered with buttons hand shower, Waterfall, Rain large, Mono

finish	code no.	Euro
Chrome	15357000	1,713.10
White/Chrome	15357400	1,713.10
Black/Chrome	15357600	1,713.10

Required parts:

· **RainSelect** Basic set for 4 functions	15312180	840.00

Measurements within scale drawings are in mm.

Technical specifications and units of measure are subject to change.

	finish	code no.	Euro



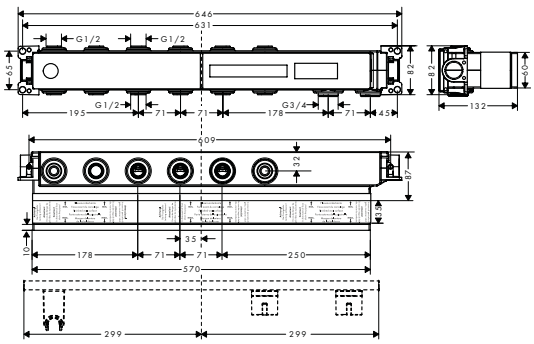

RainSelect Basic set for 4 functions

15312180 — 840.00

- 4 functions
- connection thread Rp ¾
- installation depth: 87 - 122 mm
- horizontal installation
- sound-decoupled installation
- connection dimension: DN15/DN20



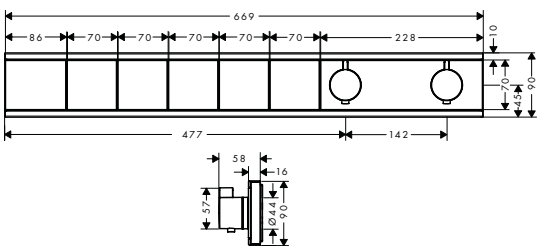

RainSelect Thermostat for concealed installation for 5 functions

Chrome	15384000	1,804.70
Matt White	15384700	2,345.90

Select

- depending on volume flow and installation situation approx. 50% flow rate reduction and integrated shut off function
- 5 functions
- Select push-button on/off control for 5 outlets
- simultaneous use of several outlets
- maximum flow rate at 3 bar: 38 l/ min
- flow rate by simultaneous use of all outlets: 38 l/ min
- thermostat cartridge, Start/stop valve to operate the functions
- safety lock at 40 °C
- temperature limitation adjustable
- non-return valve
- connection type: basic set
- min. operating pressure: 1 bar
- max. operating pressure: 10 bar
- Thermostat is delivered with buttons handshower, PowderRain, Waterfall, Rain large, shoulder shower

Required parts:

- **RainSelect** Basic set for 5 functions — 15313180 — 945.00

Measurements within scale drawings are in mm.

Technical specifications and units of measure are subject to change.

	finish	code no.	Euro
RainSelect Thermostat for concealed installation for 5 functions with integrated shower holder	Chrome	15358000	1,941.50
	White/Chrome	15358400	1,941.50
	Black/Chrome	15358600	1,941.50



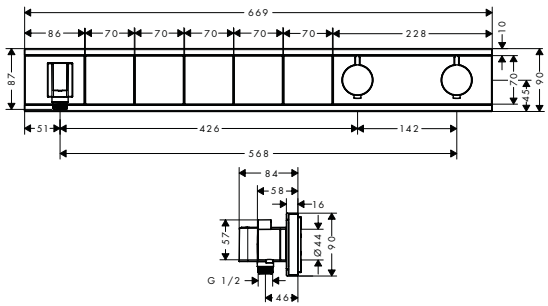

- consists of: Thermostat, shower holder
- depending on volume flow and installation situation approx. 50% flow rate reduction and integrated shut off function
- 5 functions
- Select push-button on/off control for 5 outlets
- simultaneous use of several outlets
- maximum flow rate at 3 bar: 38 l/ min
- flow rate per outlet: 26 l/ min
- flow rate by simultaneous use of all outlets: 38 l/ min
- thermostat cartridge, Start/stop valve to operate the functions
- safety lock at 40 °C
- temperature limitation adjustable
- non-return valve
- hose nut: for shower hoses with conical or cylindrical nut on both sides
- connection type: basic set
- min. operating pressure: 1 bar
- max. operating pressure: 10 bar
- Thermostat is delivered with buttons hand shower, Waterfall, Rain large, Mono, body shower

Required parts:

· **RainSelect** Basic set for 5 functions		15313180	945.00

RainSelect Basic set for 5 functions		15313180	945.00



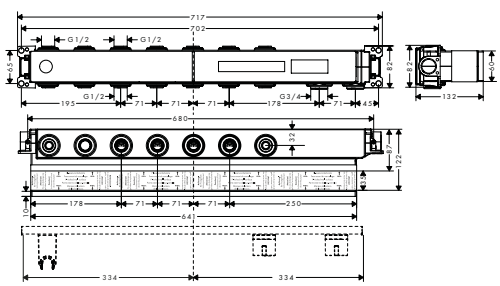

- 5 functions
- connection thread Rp ¾
- installation depth: 87 - 122 mm
- horizontal installation
- sound-decoupled installation
- connection dimension: DN15/DN20

ShowerSelect glass thermostatic mixers for concealed installation

ShowerSelect Glass Thermostat for concealed installation for 1 function	White/Chrome	15737400	710.20



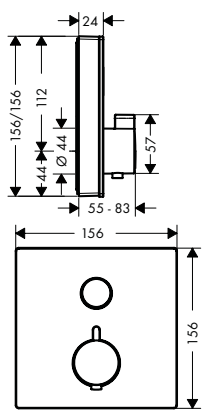

- 1 function
- Select push-button on/off control for 1 outlet
- maximum flow rate at 3 bar: 26,7 l/ min
- thermostat cartridge, Start/stop valve to operate the functions
- safety lock at 40 °C
- temperature limitation adjustable
- connection type: basic set
- min. operating pressure: 1 bar
- max. operating pressure: 10 bar
- Thermostat is delivered with button On/Off

Required parts:

· Basic set iBox universal		01800180	137.30

Optional parts:

· Extension iBox universal basic set 2.5 cm		13595000	50.40
· **ShowerSelect Glass** Extension element	Chrome	13604000	100.20

Measurements within scale drawings are in mm.

	finish	code no.	Euro
ShowerSelect Glass Thermostat for concealed installation for 2 functions	White/Chrome	15738400	776.90



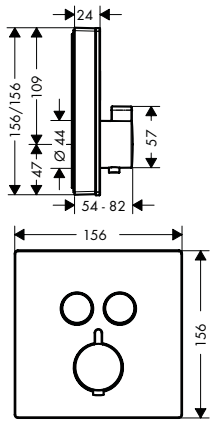

- 2 functions
- Select push-button on/off control for 2 outlets
- simultaneous use of several outlets
- flow rate upper outlet: 25 l/ min
- flow rate lower outlet: 23 l/ min
- thermostat cartridge, Start/stop valve to operate the functions
- safety lock at 40 °C
- temperature limitation adjustable
- connection type: basic set
- min. operating pressure: 1 bar
- max. operating pressure: 10 bar
- Thermostat is delivered with buttons hand shower and Rain large

Required parts:

· Basic set iBox universal		01800180	137.30

Optional parts:

· Extension iBox universal basic set 2.5 cm		13595000	50.40
· **ShowerSelect Glass** Extension element	Chrome	13604000	100.20

ShowerSelect Glass Thermostat HighFlow for concealed installation	White/Chrome	15734400	516.00



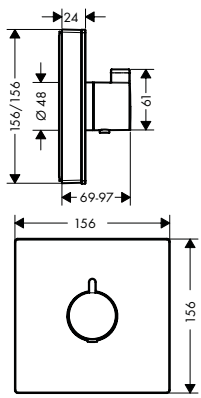

- maximum flow rate at 3 bar: 42 l/ min
- flow rate upper outlet: 42 l/ min
- flow rate lower outlet: 42 l/ min
- thermostat cartridge
- safety lock at 40 °C
- temperature limitation adjustable
- connection type: basic set
- min. operating pressure: 1 bar
- max. operating pressure: 10 bar
- dirt filter included

Required parts:

· Basic set iBox universal		01800180	137.30

Optional parts:

· **ShowerSelect Glass** Valve for concealed installation for 3 functions	White/Chrome	15736400	516.00
· Extension iBox universal basic set 2.5 cm		13595000	50.40
· **ShowerSelect Glass** Extension element	Chrome	13604000	100.20

Measurements within scale drawings are in mm.

Technical specifications and units of measure are subject to change.

	finish	code no.	Euro



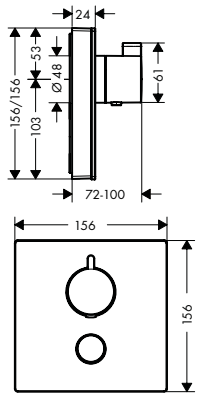

ShowerSelect Glass
Thermostat HighFlow
for concealed installation
for 1 function and additional outlet

	White/Chrome	15735400	710.20

Select

- 1 function and 1 additional outlet
- Select push-button on/off control for 1 outlet
- flow rate hand shower connection at 3 bar: 34 l/ min
- flow rate upper outlet: 59 l/ min
- thermostat cartridge, Start/stop valve to operate the functions
- safety lock at 40 °C
- temperature limitation adjustable
- connection type: basic set
- min. operating pressure: 1 bar
- max. operating pressure: 10 bar
- dirt filter included
- Thermostat is delivered with button hand shower

Required parts:

· Basic set iBox universal		01800180	137.30

Optional parts:

· **ShowerSelect Glass** Valve for concealed installation for 3 functions	White/Chrome	15736400	516.00
· Extension iBox universal basic set 2.5 cm		13595000	50.40
· **ShowerSelect Glass** Extension element	Chrome	13604000	100.20



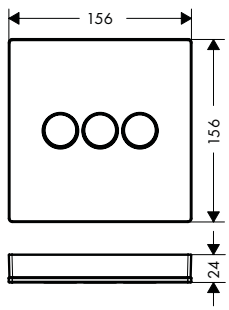

ShowerSelect Glass Valve
for concealed installation
for 3 functions

	White/Chrome	15736400	516.00

Select

- 3 functions
- simultaneous use of several outlets
- maximum flow rate at 3 bar: 30 l/ min
- flow rate upper outlet: 26 l/ min
- Flow rate left and right: 29 l/ min
- flow rate by simultaneous use of all outlets: 44 l/ min
- Start/stop valve to operate the functions
- connection type: basic set
- Valve is delivered with buttons Waterfall, Rain large, Mono

Required parts:

· Basic set iBox universal		01800180	137.30

Optional parts:

· **ShowerSelect Glass** Thermostat HighFlow for concealed installation	White/Chrome	15734400	516.00
· **ShowerSelect Glass** Thermostat HighFlow for concealed installation for 1 function and additional outlet	White/Chrome	15735400	710.20
· Extension iBox universal basic set 2.5 cm		13595000	50.40
· **ShowerSelect Glass** Extension element	Chrome	13604000	100.20

Optional parts - buttons - please order separately



Symbol ON/OFF	White	92579450	25.20
	Black	92579610	25.20

Measurements within scale drawings are in mm.

		finish	code no.	Euro
	Symbol handshower	White Black	92573450 92573610	25.20 25.20
	Symbol showerhead Rain large	White Black	92571450 92571610	25.20 25.20
	Symbol showerhead Rain small	White Black	92572450 92572610	25.20 25.20
	Symbol Rain Flow	White Black	92574450 92574610	25.20 25.20
	Symbol Whirl	White Black	92575450 92575610	25.20 25.20
	Symbol Mono	White Black	92576450 92576610	25.20 25.20
	Symbol Tub	White Black	92577450 92577610	25.20 25.20
	Symbol Body spray	White Black	92578450 92578610	25.20 25.20
	Basic set iBox universal · suitable for all shower, bath tub and thermostat finish sets for concealed installation · connection thread Rp ¾ · rotationally-symmetric installation · sound-decoupled installation · connection dimension: DN20 **Alternative products:** · Basic set iBox universal with shut-off unit **Optional parts:** · Extension iBox universal basic set 2.5 cm · Fastening rail set for iBox universal · Assembly aid for iBox universal		01800180 01850180 13595000 96615000 93500000	137.30 178.40 50.40 35.80 13.00

Measurements within scale drawings are in mm.

Technical specifications and units of measure are subject to change.

	finish	code no.	Euro
 			
ShowerSelect Glass Extension element · for installation between tiles and finish set · diameter: 157 mm · extension length: 22 mm	Chrome	13604000	100.20

ShowerSelect mixers for concealed installation



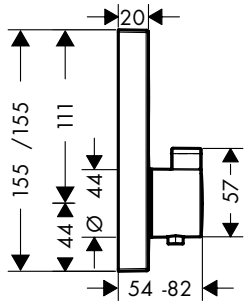

ShowerSelect Thermostat for concealed installation for 1 function · 1 function · Select push-button on/off control for 1 outlet · maximum flow rate at 3 bar: 26,7 l/ min · thermostat cartridge, Start/stop valve to operate the functions · safety lock at 40 °C · temperature limitation adjustable · connection type: basic set · min. operating pressure: 1 bar · max. operating pressure: 10 bar · Thermostat is delivered with button On/Off	Chrome	15762000	574.50
Required parts: · Basic set iBox universal		01800180	137.30
Optional parts: · **ShowerSelect** Extension element · Extension iBox universal basic set 2.5 cm	Chrome	13593000 13595000	46.80 50.40



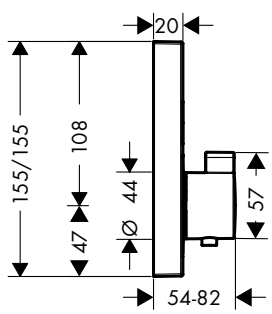

ShowerSelect Thermostat for concealed installation for 2 functions · 2 functions · Select push-button on/off control for 2 outlets · simultaneous use of several outlets · flow rate upper outlet: 25 l/ min · flow rate lower outlet: 23 l/ min · thermostat cartridge, Start/stop valve to operate the functions · safety lock at 40 °C · temperature limitation adjustable · connection type: basic set · min. operating pressure: 1 bar · max. operating pressure: 10 bar · Thermostat is delivered with buttons hand shower and Rain large	Chrome Brushed Bronze Brushed Black Chrome Matt Black Matt White Polished Gold Optic	15763000 15763140 15763340 15763670 15763700 15763990	625.60 938.50 938.50 875.80 875.80 938.50
Required parts: · Basic set iBox universal		01800180	137.30
Optional parts: · **ShowerSelect** Extension element	Chrome Brushed Bronze Brushed Black Chrome Matt Black Matt White Polished Gold Optic	13593000 13593140 13593340 13593670 13593700 13593990	46.80 70.20 70.20 65.50 65.50 70.20
· Extension iBox universal basic set 2.5 cm		13595000	50.40

Measurements within scale drawings are in mm.

Technical specifications and units of measure are subject to change.

	finish	code no.	Euro
 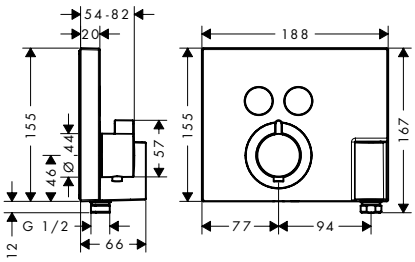			
ShowerSelect Thermostat for concealed installation for 2 functions with hose connection and shower holder · consists of: Thermostat, shower holder · 2 functions · Select push-button on/off control for 2 outlets · simultaneous use of several outlets · flow rate hand shower connection at 3 bar: 14 l/ min · flow rate upper outlet: 29 l/ min · thermostat cartridge, Start/stop valve to operate the functions · safety lock at 40 °C · temperature limitation adjustable · hose nut: for shower hoses with conical nut on both sides · connection type: basic set · min. operating pressure: 1 bar · max. operating pressure: 10 bar · Thermostat is delivered with buttons hand shower and Rain large	Chrome	15765000	766.10
Required parts: · Basic set iBox universal		01800180	137.30
Optional parts: · Extension element ShowerSelect FixFit Porter	Chrome	13601000	113.60
 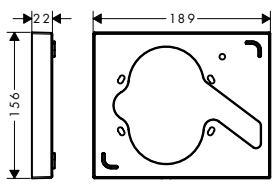			
Extension element ShowerSelect FixFit Porter · for installation between tiles and finish set · extension length: 22 mm	Chrome	13601000	113.60
Optional parts: · **ShowerSelect** Thermostat for concealed installation for 2 functions with hose connection and shower holder	Chrome	15765000	766.10

Measurements within scale drawings are in mm.

Technical specifications and units of measure are subject to change.



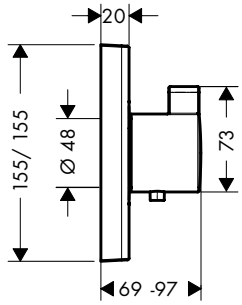

ShowerSelect Thermostat HighFlow for concealed installation

- maximum flow rate at 3 bar: 42 l/ min
- flow rate upper outlet: 42 l/ min
- flow rate lower outlet: 42 l/ min
- thermostat cartridge
- safety lock at 40 °C
- temperature limitation adjustable
- connection type: basic set
- min. operating pressure: 1 bar
- max. operating pressure: 10 bar
- dirt filter included

	finish	code no.	Euro
	Chrome	15760000	415.00
	Brushed Bronze	15760140	622.60
	Brushed Black Chrome	15760340	622.60
	Matt Black	15760670	581.00
	Matt White	15760700	581.00
	Polished Gold Optic	15760990	622.60

Required parts:

· Basic set iBox universal		01800180	137.30

Optional parts:

· **ShowerSelect** Valve for concealed installation for 3 functions	Chrome	15764000	415.00
	Brushed Bronze	15764140	622.60
	Brushed Black Chrome	15764340	622.60
	Matt Black	15764670	581.00
	Matt White	15764700	581.00
	Polished Gold Optic	15764990	622.60
· **ShowerSelect** Extension element	Chrome	13593000	46.80
	Brushed Bronze	13593140	70.20
	Brushed Black Chrome	13593340	70.20
	Matt Black	13593670	65.50
	Matt White	13593700	65.50
	Polished Gold Optic	13593990	70.20
· Extension iBox universal basic set 2.5 cm		13595000	50.40



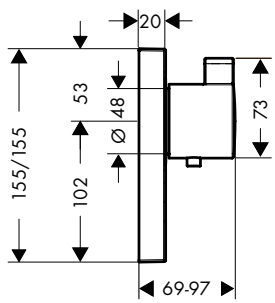

ShowerSelect Thermostat HighFlow for concealed installation for 1 function and additional outlet

- 1 function and 1 additional outlet
- Select push-button on/off control for 1 outlet
- flow rate hand shower connection at 3 bar: 34 l/ min
- flow rate upper outlet: 59 l/ min
- thermostat cartridge, Start/stop valve to operate the functions
- safety lock at 40 °C
- temperature limitation adjustable
- connection type: basic set
- min. operating pressure: 1 bar
- max. operating pressure: 10 bar
- dirt filter included
- Thermostat is delivered with button hand shower

	Chrome	15761000	574.50

Required parts:

· Basic set iBox universal		01800180	137.30

Optional parts:

· **ShowerSelect** Valve for concealed installation for 3 functions	Chrome	15764000	415.00
· **ShowerSelect** Extension element	Chrome	13593000	46.80
· Extension iBox universal basic set 2.5 cm		13595000	50.40

Measurements within scale drawings are in mm.

Technical specifications and units of measure are subject to change.



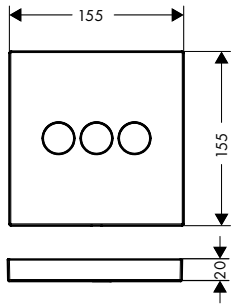

	finish	code no.	Euro
ShowerSelect Valve for concealed installation for 3 functions	Chrome	15764000	415.00
	Brushed Bronze	15764140	622.60
	Brushed Black	15764340	622.60
	Chrome Matt Black	15764670	581.00
	Matt White	15764700	581.00
	Polished Gold Optic	15764990	622.60
· 3 functions · simultaneous use of several outlets · maximum flow rate at 3 bar: 30 l/ min · flow rate upper outlet: 26 l/ min · Flow rate left and right: 29 l/ min · flow rate by simultaneous use of all outlets: 30 l/ min · Start/stop valve to operate the functions · connection type: basic set · valve is delivered with buttons Rain large, Rain small and hand shower			
Required parts:			
· Basic set iBox universal		01800180	137.30
Optional parts:			
· **ShowerSelect** Thermostat HighFlow for concealed installation	Chrome	15760000	415.00
	Brushed Bronze	15760140	622.60
	Brushed Black	15760340	622.60
	Chrome Matt Black	15760670	581.00
	Matt White	15760700	581.00
	Polished Gold Optic	15760990	622.60
· **ShowerSelect** Thermostat HighFlow for concealed installation for 1 function and additional outlet	Chrome	15761000	574.50
· **ShowerSelect** Extension element	Chrome	13593000	46.80
	Brushed Bronze	13593140	70.20
	Brushed Black	13593340	70.20
	Chrome Matt Black	13593670	65.50
	Matt White	13593700	65.50
	Polished Gold Optic	13593990	70.20
· Extension iBox universal basic set 2.5 cm		13595000	50.40

ShowerSelect mixers for concealed installation



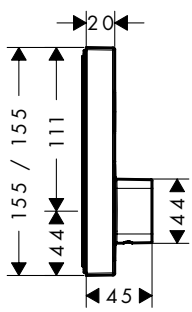

ShowerSelect Mixer for concealed installation for 1 function	Chrome	15767000	478.80
· 1 function · connection type: basic set · maximum flow rate at 3 bar: 21 l/ min · flow rate of hand shower at 3 bar: 16 l/ min · ceramic cartridge for temperature control, Start/stop valve to operate the functions · min. operating pressure: 1 bar · max. operating pressure: 10 bar · temperature limitation adjustable · Mixer is delivered with button On/Off			
Required parts:			
· Basic set iBox universal		01800180	137.30
Optional parts:			
· **ShowerSelect** Extension element	Chrome	13593000	46.80
· Extension iBox universal basic set 2.5 cm		13595000	50.40

Measurements within scale drawings are in mm.

Technical specifications and units of measure are subject to change.

	finish	code no.	Euro
ShowerSelect Mixer for concealed installation for 2 functions	Chrome	15768000	530.10
· 2 functions · simultaneous use of several outlets · connection type: basic set · maximum flow rate at 3 bar: 22 l/ min · flow rate upper outlet: 20 l/ min · flow rate lower outlet: 20 l/ min · ceramic cartridge for temperature control, Start/stop valve to operate the functions · min. operating pressure: 1 bar · max. operating pressure: 10 bar · temperature limitation adjustable · Mixer is delivered with button On/Off			
Required parts:			
· Basic set iBox universal		01800180	137.30
Optional parts:			
· **ShowerSelect** Extension element	Chrome	13593000	46.80
· Extension iBox universal basic set 2.5 cm		13595000	50.40
Basic set iBox universal		01800180	137.30
· suitable for all shower, bath tub and thermostat finish sets for concealed installation · connection thread Rp ¾ · rotationally-symmetric installation · sound-decoupled installation · connection dimension: DN20			
Alternative products:			
· Basic set iBox universal with shut-off unit		01850180	178.40
Optional parts:			
· Extension iBox universal basic set 2.5 cm		13595000	50.40
· Fastening rail set for iBox universal		96615000	35.80
· Assembly aid for iBox universal		93500000	13.00

ShowerSelect S thermostatic mixers for concealed installation

ShowerSelect S Thermostat for concealed installation for 1 function	Chrome	15744000	574.50
· 1 function · Select push-button on/off control for 1 outlet · maximum flow rate at 3 bar: 26,7 l/ min · thermostat cartridge, Start/stop valve to operate the functions · safety lock at 40 °C · temperature limitation adjustable · connection type: basic set · min. operating pressure: 1 bar · max. operating pressure: 10 bar · Thermostat is delivered with button On/Off			
Required parts:			
· Basic set iBox universal		01800180	137.30
Optional parts:			
· Extension element 15 cm	Chrome	13597000	47.80
· Extension iBox universal basic set 2.5 cm		13595000	50.40

Measurements within scale drawings are in mm.



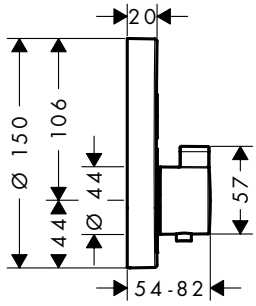

	finish	code no.	Euro
ShowerSelect S Thermostat for concealed installation for 2 functions	Chrome	15743000	625.60
	Brushed Bronze	15743140	938.50
	Brushed Black	15743340	938.50
	Chrome Matt Black	15743670	875.80
	Matt White	15743700	875.80
	Polished Gold Optic	15743990	938.50

- 2 functions
- Select push-button on/off control for 2 outlets
- simultaneous use of several outlets
- flow rate upper outlet: 25 l/ min
- flow rate lower outlet: 23 l/ min
- thermostat cartridge, Start/stop valve to operate the functions
- safety lock at 40 °C
- temperature limitation adjustable
- connection type: basic set
- min. operating pressure: 1 bar
- max. operating pressure: 10 bar
- Thermostat is delivered with buttons hand shower and Rain large

Required parts:

· Basic set iBox universal		01800180	137.30

Optional parts:

· Extension element 15 cm	Chrome	13597000	47.80
	Brushed Bronze	13597140	71.80
	Brushed Black	13597340	71.80
	Chrome Matt Black	13597670	67.00
	Matt White	13597700	67.00
	Polished Gold Optic	13597990	71.80
· Extension iBox universal basic set 2.5 cm		13595000	50.40



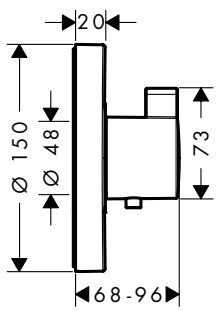

ShowerSelect S Thermostat HighFlow for concealed installation	Chrome	15741000	415.00

- maximum flow rate at 3 bar: 59 l/ min
- flow rate upper outlet: 42 l/ min
- flow rate lower outlet: 42 l/ min
- thermostat cartridge
- safety lock at 40 °C
- temperature limitation adjustable
- connection type: basic set
- min. operating pressure: 1 bar
- max. operating pressure: 10 bar
- dirt filter included

Required parts:

· Basic set iBox universal		01800180	137.30

Optional parts:

· **ShowerSelect S** Valve for concealed installation for 3 functions	Chrome	15745000	415.00
· Extension element 15 cm	Chrome	13597000	47.80
· Extension iBox universal basic set 2.5 cm		13595000	50.40

Measurements within scale drawings are in mm.

Technical specifications and units of measure are subject to change.



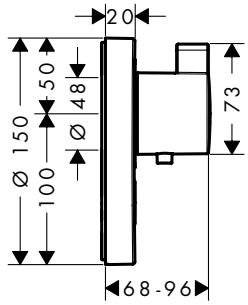

	finish	code no.	Euro
ShowerSelect S Thermostat HighFlow for concealed installation for 1 function and additional outlet	Chrome	15742000	574.50
· 1 function and 1 additional outlet · flow rate hand shower connection at 3 bar: 34 l/ min · flow rate upper outlet: 59 l/ min · thermostat cartridge · safety lock at 40 °C · temperature limitation adjustable · connection type: basic set · min. operating pressure: 1 bar · max. operating pressure: 10 bar · Thermostat is delivered with button hand shower			
Required parts:			
· Basic set iBox universal		01800180	137.30
Optional parts:			
· **ShowerSelect S** Valve for concealed installation for 3 functions	Chrome	15745000	415.00
· Extension element 15 cm	Chrome	13597000	47.80
· Extension iBox universal basic set 2.5 cm		13595000	50.40



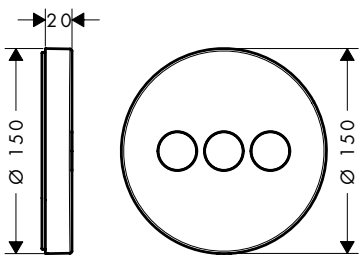

ShowerSelect S Valve for concealed installation for 3 functions	Chrome	15745000	415.00
· 3 functions · simultaneous use of several outlets · maximum flow rate at 3 bar: 30 l/ min · flow rate upper outlet: 26 l/ min · Flow rate left and right: 29 l/ min · flow rate by simultaneous use of all outlets: 30 l/ min · Start/stop valve to operate the functions · connection type: basic set · min. operating pressure: 1 bar · max. operating pressure: 10 bar · Valve is delivered with buttons Rain large, Whirl, Waterfall			
Required parts:			
· Basic set iBox universal		01800180	137.30
Optional parts:			
· **ShowerSelect S** Thermostat HighFlow for concealed installation	Chrome	15741000	415.00
· **ShowerSelect S** Thermostat HighFlow for concealed installation for 1 function and additional outlet	Chrome	15742000	574.50
· Extension element 15 cm	Chrome	13597000	47.80
· Extension iBox universal basic set 2.5 cm		13595000	50.40

Measurements within scale drawings are in mm.

ShowerSelect S mixers for concealed installation

	finish	code no.	Euro
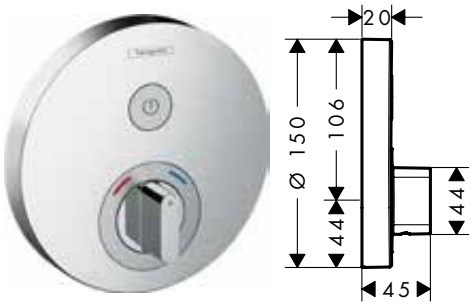			
ShowerSelect S Mixer for concealed installation for 1 function · 1 function · connection type: basic set · maximum flow rate at 3 bar: 21 l/ min · flow rate of hand shower at 3 bar: 12 l/ min · ceramic cartridge for temperature control, Start/stop valve to operate the functions · min. operating pressure: 1 bar · max. operating pressure: 10 bar · temperature limitation adjustable · Mixer is delivered with button On/Off	Chrome	15747000	478.80
Required parts:			
· Basic set iBox universal		01800180	137.30
Optional parts:			
· Extension element 15 cm	Chrome	13597000	47.80
· Extension iBox universal basic set 2.5 cm		13595000	50.40
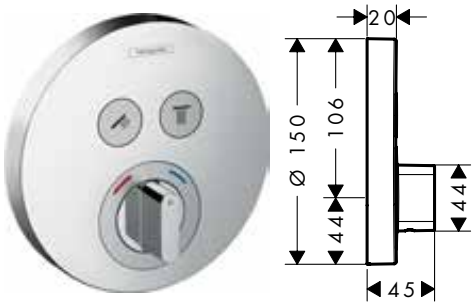			
ShowerSelect S Mixer for concealed installation for 2 functions · 2 functions · simultaneous use of several outlets · connection type: basic set · flow rate upper outlet: 22 l/ min · flow rate lower outlet: 22 l/ min · ceramic cartridge for temperature control, Start/stop valve to operate the functions · min. operating pressure: 1 bar · max. operating pressure: 10 bar · temperature limitation adjustable · Mixer is delivered with button On/Off	Chrome	15748000	530.10
Required parts:			
· Basic set iBox universal		01800180	137.30
Optional parts:			
· Extension element 15 cm	Chrome	13597000	47.80
· Extension iBox universal basic set 2.5 cm		13595000	50.40

Optional parts - buttons - please order separately

 Symbol ON/OFF	Matt Black	93579670	9.90
	Matt White	93579700	9.90
	Satin Chrome	93579880	6.60
 Symbol hand shower	Matt Black	93573670	9.90
	Matt White	93573700	9.90
	Satin Chrome	93573880	6.60
 Symbol overhead shower Rain large	Matt Black	93571670	9.90
	Matt White	93571700	9.90
	Satin Chrome	93571880	6.60

Measurements within scale drawings are in mm.

Technical specifications and units of measure are subject to change.

		finish	code no.	Euro
	Symbol overhead shower Rain small	Matt Black Matt White Satin Chrome	93572670 93572700 93572880	9.90 9.90 6.60
	Symbol Rain Flow	Matt Black Matt White Satin Chrome	93574670 93574700 93574880	9.90 9.90 6.60
	Symbol Whirl	Matt Black Matt White Satin Chrome	93575670 93575700 93575880	9.90 9.90 6.60
	Symbol Mono	Matt Black Matt White Satin Chrome	93576670 93576700 93576880	9.90 9.90 6.60
	Symbol tub	Matt Black Matt White Satin Chrome	93577670 93577700 93577880	9.90 9.90 6.60
	Symbol body spray	Matt Black Matt White Satin Chrome	93578670 93578700 93578880	9.90 9.90 6.60
	Basic set iBox universal · suitable for all shower, bath tub and thermostat finish sets for concealed installation · connection thread Rp ¾ · rotationally-symmetric installation · sound-decoupled installation · connection dimension: DN20		01800180	137.30
	Alternative products: · Basic set iBox universal with shut-off unit		01850180	178.40
	Optional parts: · Extension iBox universal basic set 2.5 cm · Fastening rail set for iBox universal · Assembly aid for iBox universal		13595000 96615000 93500000	50.40 35.80 13.00

Measurements within scale drawings are in mm.

Technical specifications and units of measure are subject to change.

Ecostat Square thermostatic mixers and valves for concealed installation



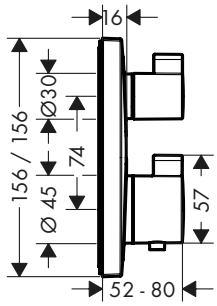

	finish	code no.	Euro
Ecostat Square Thermostat for concealed installation for 1 function	Chrome	15712000	404.50
· 1 function · maximum flow rate at 3 bar: 26,5 l/ min · thermostat cartridge · safety lock at 40 °C · temperature limitation adjustable · volume control · connection type: basic set · min. operating pressure: 1 bar · max. operating pressure: 10 bar			
Required parts:			
· Basic set iBox universal		01800180	137.30
Optional parts:			
· **ShowerSelect** Extension element	Chrome	13593000	46.80
· Extension iBox universal basic set 2.5 cm		13595000	50.40



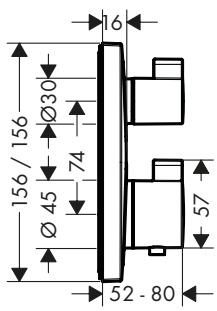

Ecostat Square Thermostat for concealed installation for 2 functions	Chrome	15714000	454.10
	Brushed Bronze	15714140	681.10
	Brushed Black	15714340	681.10
	Chrome Matt Black	15714670	635.80
	Matt White	15714700	635.80
	Polished Gold Optic	15714990	681.10
· 2 functions · maximum flow rate at 3 bar: 29 l/ min · flow rate upper outlet: 28 l/ min · flow rate lower outlet: 25 l/ min · thermostat cartridge, shut-off/ diverter valve · safety lock at 40 °C · temperature limitation adjustable · connection type: basic set · min. operating pressure: 1 bar · max. operating pressure: 10 bar			
Required parts:			
· Basic set iBox universal		01800180	137.30
Optional parts:			
· **ShowerSelect** Extension element	Chrome	13593000	46.80
	Brushed Bronze	13593140	70.20
	Brushed Black	13593340	70.20
	Chrome Matt Black	13593670	65.50
	Matt White	13593700	65.50
	Polished Gold Optic	13593990	70.20
· Extension iBox universal basic set 2.5 cm		13595000	50.40

Measurements within scale drawings are in mm.

Technical specifications and units of measure are subject to change.

Ecostat E thermostatic mixers and valves for concealed installation

	finish	code no.	Euro



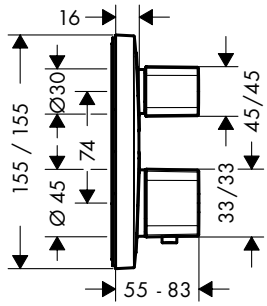

Ecostat E Thermostat
for concealed installation
for 1 function

- 1 function
- maximum flow rate at 3 bar: 26,5 l/ min
- thermostat cartridge
- safety lock at 40 °C
- temperature limitation adjustable
- volume control
- connection type: basic set
- min. operating pressure: 1 bar
- max. operating pressure: 10 bar

Required parts:			
· Basic set iBox universal		01800180	137.30
Optional parts:			
· **PuraVida** Extension element	Chrome	15597000	46.70
· Extension iBox universal basic set 2.5 cm		13595000	50.40



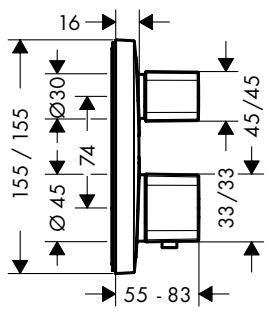

Ecostat E Thermostat
for concealed installation
for 2 functions

- 2 functions
- maximum flow rate at 3 bar: 29 l/ min
- flow rate upper outlet: 28 l/ min
- flow rate lower outlet: 25 l/ min
- thermostat cartridge, shut-off/ diverter valve
- safety lock at 40 °C
- temperature limitation adjustable
- connection type: basic set
- min. operating pressure: 1 bar
- max. operating pressure: 10 bar

Required parts:			
· Basic set iBox universal		01800180	137.30
Optional parts:			
· **PuraVida** Extension element	Chrome	15597000	46.70
· Extension iBox universal basic set 2.5 cm		13595000	50.40



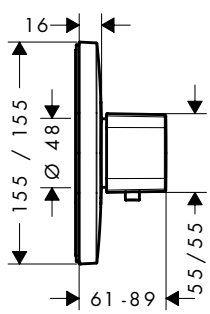

Ecostat E Thermostat HighFlow
for concealed installation

- maximum flow rate at 3 bar: 59 l/ min
- flow rate upper outlet: 42 l/ min
- flow rate lower outlet: 42 l/ min
- thermostat cartridge
- safety lock at 40 °C
- temperature limitation adjustable
- connection type: basic set
- min. operating pressure: 1 bar
- max. operating pressure: 10 bar

Required parts:			
· Basic set iBox universal		01800180	137.30
Optional parts:			
· **PuraVida** Extension element	Chrome	15597000	46.70
· Extension iBox universal basic set 2.5 cm		13595000	50.40

Measurements within scale drawings are in mm.

	finish	code no.	Euro



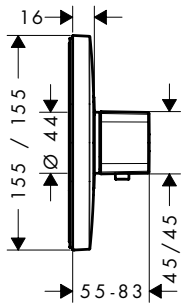

Ecostat E Thermostat
for concealed installation

- maximum flow rate at 3 bar: 37 l/ min
- thermostat cartridge
- safety lock at 40 °C
- temperature limitation adjustable
- connection type: basic set
- min. operating pressure: 1 bar
- max. operating pressure: 10 bar

Optional parts:			
· **PuraVida** Extension element	Chrome	15597000	46.70
· Extension iBox universal basic set 2.5 cm		13595000	50.40

Ecostat S thermostatic mixers and valves for concealed installation



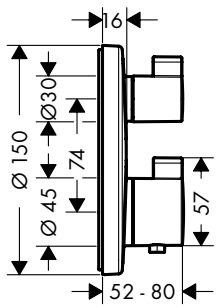

Ecostat S Thermostat
for concealed installation
for 1 function

- 1 function
- maximum flow rate at 3 bar: 26,5 l/ min
- thermostat cartridge, ceramic valves 90°
- safety lock at 40 °C
- temperature limitation adjustable
- volume control
- connection type: basic set
- min. operating pressure: 1 bar
- max. operating pressure: 10 bar

	Chrome	15757000	404.50
Required parts:			
· Basic set iBox universal		01800180	137.30
Optional parts:			
· Extension element 15 cm	Chrome	13597000	47.80
· Extension iBox universal basic set 2.5 cm		13595000	50.40



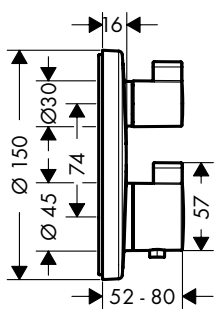

Ecostat S Thermostat
for concealed installation
for 2 functions

- 2 functions
- volume control and diverter for 2 outlets
- maximum flow rate at 3 bar: 29 l/ min
- flow rate upper outlet: 28 l/ min
- flow rate lower outlet: 25 l/ min
- thermostat cartridge, shut-off/ diverter valve
- safety lock at 40 °C
- temperature limitation adjustable
- connection type: basic set
- min. operating pressure: 1 bar
- max. operating pressure: 10 bar

	Chrome	15758000	454.10
	Brushed Bronze	15758140	681.10
	Brushed Black Chrome	15758340	681.10
	Matt Black	15758670	635.80
	Matt White	15758700	635.80
	Polished Gold Optic	15758990	681.10
Required parts:			
· Basic set iBox universal		01800180	137.30
Optional parts:			
· Extension element 15 cm	Chrome	13597000	47.80
	Brushed Bronze	13597140	71.80
	Brushed Black Chrome	13597340	71.80
	Matt Black	13597670	67.00
	Matt White	13597700	67.00
	Polished Gold Optic	13597990	71.80
· Extension iBox universal basic set 2.5 cm		13595000	50.40

Measurements within scale drawings are in mm.

Technical specifications and units of measure are subject to change.

	finish	code no.	Euro
 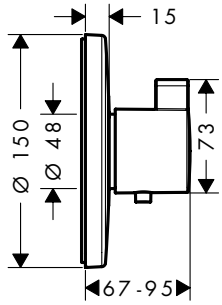			
Ecostat S Thermostat HighFlow for concealed installation · maximum flow rate at 3 bar: 59 l/ min · flow rate upper outlet: 42 l/ min · flow rate lower outlet: 42 l/ min · thermostat cartridge · safety lock at 40 °C · temperature limitation adjustable · connection type: basic set · min. operating pressure: 1 bar · max. operating pressure: 10 bar	Chrome	15756000	404.50
Required parts: · Basic set iBox universal		01800180	137.30
Optional parts: · Extension element 15 cm · Extension iBox universal basic set 2.5 cm	Chrome	13597000 13595000	47.80 50.40
 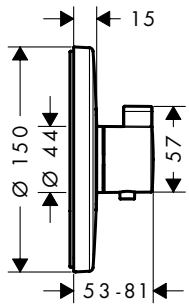			
Ecostat S Thermostat for concealed installation · maximum flow rate at 3 bar: 37 l/ min · thermostat cartridge · safety lock at 40 °C · temperature limitation adjustable · connection type: basic set · min. operating pressure: 1 bar · max. operating pressure: 10 bar	Chrome	15755000	248.90
Optional parts: · Extension element 15 cm · Extension iBox universal basic set 2.5 cm	Chrome	13597000 13595000	47.80 50.40
 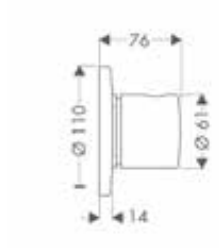			
Shut-off/ diverter valve S Trio/ Quattro for concealed installation · 3 functions	Chrome	15932000	131.40
Required parts: · Basic set for Trio shut-off/ diverter valve for concealed installation		15981180	167.00
· Basic set for Quattro four-way diverter valve for concealed installation		15930180	263.20
 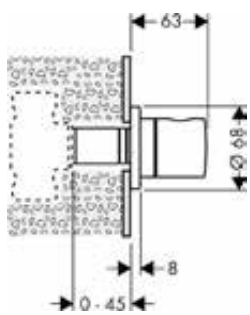			
Shut-off valve S for concealed installation	Chrome	15972000	98.20
Required parts: · Basic set 52 l/ min for shut-off valve for concealed installation spindle		15973180	84.60
· Basic set 40 l/ min for shut-off valve for concealed installation ceramic		15974180	87.90
· Basic set 130 l/ min for shut-off valve for concealed installation spindle		15970180	91.90
Optional parts: · Extension set 2.5 cm		96370000	48.60

Measurements within scale drawings are in mm.

	finish	code no.	Euro
Extension element 15 cm			
· for installation between tiles and finish set · suitable for all shower and bath tub finish sets Ø 150 mm · diameter: 152 mm · extension length: 22 mm	Chrome	13597000	47.80
	Brushed Bronze	13597140	71.80
	Brushed Black Chrome	13597340	71.80
	Matt Black	13597670	67.00
	Matt White	13597700	67.00
	Polished Gold Optic	13597990	71.80
Metris Shut-off valve E for concealed installation	Chrome	31677000	39.80
· connection type: DN15/DN20			
Required parts:			
· Basic set 52 l/ min for shut-off valve for concealed installation spindle		15973180	84.60
· Basic set 40 l/ min for shut-off valve for concealed installation ceramic		15974180	87.90
· Basic set 130 l/ min for shut-off valve for concealed installation spindle		15970180	91.90
Optional parts:			
· Extension set 2.5 cm		96370000	48.60
Logis Shut-off valve for concealed installation	Chrome	71970000	29.40
· connection type: DN15/DN20			
Required parts:			
· Basic set 52 l/ min for shut-off valve for concealed installation spindle		15973180	84.60
· Basic set 40 l/ min for shut-off valve for concealed installation ceramic		15974180	87.90
· Basic set 130 l/ min for shut-off valve for concealed installation spindle		15970180	91.90
Optional parts:			
· Extension set 2.5 cm		96370000	48.60

Basic sets

Basic set iBox universal		01800180	137.30
· suitable for all shower, bath tub and thermostat finish sets for concealed installation · connection thread Rp ¾ · rotationally-symmetric installation · sound-decoupled installation · connection dimension: DN20			
Alternative products:			
· Basic set iBox universal with shut-off unit		01850180	178.40
Optional parts:			
· Extension iBox universal basic set 2.5 cm		13595000	50.40
· Fastening rail set for iBox universal		96615000	35.80
· Assembly aid for iBox universal		93500000	13.00

Measurements within scale drawings are in mm.

Technical specifications and units of measure are subject to change.

	finish	code no.	Euro
 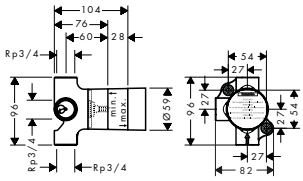			
Basic set for Trio shut-off/ diverter valve for concealed installation · 2 functions · simultaneous utilization of 2 functions · suitable for all Trio finish sets · connection dimension: DN20 · maximum flow rate at 3 bar: 65 l/ min		15981180	167.00
Optional parts: · Extension set 2.5 cm		96370000	48.60
 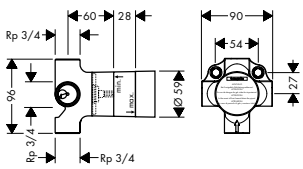			
Basic set for Quattro four-way diverter valve for concealed installation · requires volume control · 3 functions · simultaneous utilization of 2 functions · suitable for all Quattro finish sets · connection dimension: DN20 · maximum flow rate at 3 bar: 65 l/ min		15930180	263.20
Optional parts: · Extension set 2.5 cm		96370000	48.60
 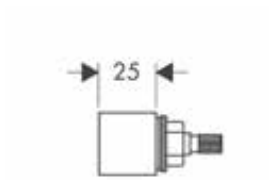			
Extension set 2.5 cm · extension length: 25 mm		96370000	48.60
 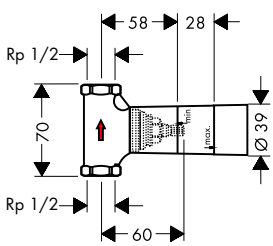			
Basic set 52 l/ min for shut-off valve for concealed installation spindle · connection type: DN15 · suitable for all shut-off valves finish sets · connection dimension: DN15 · maximum flow rate at 3 bar: 52 l/ min		15973180	84.60
Alternative products: · Basic set 40 l/ min for shut-off valve for concealed installation ceramic		15974180	87.90
· Basic set 130 l/ min for shut-off valve for concealed installation spindle		15970180	91.90
Optional parts: · Extension set 2.5 cm		96370000	48.60

Measurements within scale drawings are in mm.

hansgrohe

iBox® universal



Hansgrohe iBox® universal: one for all. All finish sets and overhead showers at a glance.

iBox universal



01800180

Metropol
bath
with lever handle



32545, -000
32546, -000

Metropol
bath
with loop handle



74545, -000
74546, -000

Metropol
shower
with lever handle



32565, -000

Metropol
shower
with loop handle



74565, -000

Metris
bath



31493, -000
31487, -000

Metris
shower



31685, -000

Metris
bath



31454, -000
31451, -000

Metris
shower



31456, -000

Metris S
bath



31465, -000
31466, -000

Metris S
shower



31665, -000

Finoris
bath



NEW

76415, -000, -670, -700
76416, -000, -670, -700

Finoris
shower



NEW

76615, -000, -670, -700

Vivenis
bath



NEW

75415, -000, -670, -700
75416, -000, -670, -700

Vivenis
shower



NEW

75615, -000, -670, -700

Talis E
bath



71745, -000
71474, -000

Talis E
shower



71765, -000
71768, -000

Talis S
bath



72405, -000
72406, -000

Talis S
shower



72605, -000

Talis S
bath



32475, -000
32477, -000

Talis S
shower



32675, -000

Focus
bath



31945, -000
31946, -000

Focus
shower



31965, -000

Vernis Blend
bath



NEW

71466, -000, -670
71467, -000, -670

Vernis Blend
shower



NEW

71667, -000, -670

Vernis Shape
bath



NEW

71468, -000, -670
71469, -000, -670

Vernis Shape
shower



NEW

71668, -000, -670

Logis
bath



71405, -000

Logis
shower



71605, -000

Eocstat
thermostatic mixer
for 1 function



15712, -000

Eocstat
thermostatic mixer
for 2 functions



15714, -000

Ecostat E
thermostatic mixer



15705, -000

Ecostat E
thermostatic mixer
highflow



15706, -000

Ecostat E
thermostatic mixer
for 1 function



15707, -000

Ecostat E
thermostatic mixer
for 2 functions



15708, -000

Ecostat S
thermostatic mixer



15755, -000

Ecostat S
thermostatic mixer
highflow



15756, -000

Ecostat S
thermostatic mixer
with shut-off valve



15757, -000

Ecostat S
thermostatic mixer
with shut-off/diverter
valve



15758, -000

ShowerSelect
thermostatic mixer
for 1 function



15762, -000

ShowerSelect
thermostatic mixer
for 2 functions



15763, -000

ShowerSelect
thermostatic mixer
highflow for 1 function



15760, -000

ShowerSelect
thermostatic mixer
highflow for 1 function
and 1 additional
function



15761, -000

ShowerSelect
valve for 3
functions



15764, -000

ShowerSelect
thermostatic mixer
for 2 functions with
FixFit and porter unit



15765, -000

ShowerSelect
mixer for 1 function



15767, -000

ShowerSelect
mixer for 2 functions



15768, -000

ShowerSelect glass
thermostatic mixer
for 1 function



15737, -400

ShowerSelect glass
thermostatic mixer
for 2 functions

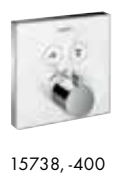

15738, -400

ShowerSelect glass
thermostatic mixer
highflow for 1 function



15734, -400

ShowerSelect glass
thermostatic mixer
highflow for 1 function
and 1 additional
function



15735, -400

ShowerSelect glass
valve for 3 functions



15736, -400

ShowerSelect S
thermostatic mixer
for 1 function



15744, -000

ShowerSelect S
thermostatic mixer
for 2 functions



15743, -000

ShowerSelect S
thermostatic mixer
highflow for 1 function



15741, -000

ShowerSelect S
thermostatic mixer
highflow for 1 function
and 1 additional
function



15742, -000

ShowerSelect S
valve for 3
functions



15745, -000

ShowerSelect S
mixer for 1 function



15747, -000

ShowerSelect S
mixer for 2 functions



15748, -000

Rainmaker Select
460 3jet



24007, -400

Rainmaker Select
460 2jet



24005, -400

Rainmaker Select
580 3jet



24001, -400

Raindance
Rainfall
180 Air 2jet



28433, -000

iBox universal

	finish	code no.	Euro
Basic set iBox universal · suitable for all shower, bath tub and thermostat finish sets for concealed installation · connection thread Rp ¾ · rotationally-symmetric installation · sound-decoupled installation · connection dimension: DN20		01800180	137.30
Alternative products:			
· Basic set iBox universal with shut-off unit		01850180	178.40
Optional parts:			
· Extension iBox universal basic set 2.5 cm		13595000	50.40
· Fastening rail set for iBox universal		96615000	35.80
· Assembly aid for iBox universal		93500000	13.00



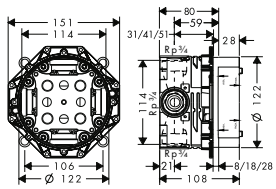

	finish	code no.	Euro
Basic set iBox universal with shut-off unit · suitable for all shower, bath tub and thermostat finish sets for concealed installation · connection thread Rp ¾ · sound-decoupled installation · connection dimension: DN20		01850180	178.40
Alternative products:			
· Basic set iBox universal		01800180	137.30
Optional parts:			
· Extension iBox universal basic set 2.5 cm		13595000	50.40
· Fastening rail set for iBox universal		96615000	35.80
· Assembly aid for iBox universal		93500000	13.00



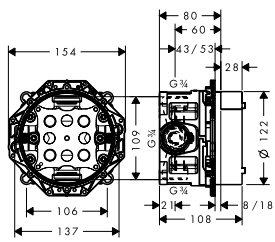

Assembly aid for iBox universal · spirit levels for correct horizontal and vertical alignment of the iBox universal · with fixations to simply put the assembly aid on the iBox universal · markings for the tile spacer · 4 more fixation aids all around, thus against rotation		93500000	13.00



PuraVida Extension element · for installation between tiles and finish set · diameter: 157 mm · extension length: 22 mm	Chrome	15597000	46.70
	Brushed Bronze	15597140	70.00
	Brushed Black	15597340	70.00
	Chrome Matt Black	15597670	65.30
	Matt White	15597700	65.30
	Polished Gold Optic	15597990	70.00



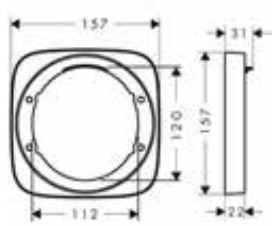

Extension element 15 cm · for installation between tiles and finish set · suitable for all shower and bath tub finish sets Ø 150 mm · diameter: 152 mm · extension length: 22 mm	Chrome	13597000	47.80
	Brushed Bronze	13597140	71.80
	Brushed Black	13597340	71.80
	Chrome Matt Black	13597670	67.00
	Matt White	13597700	67.00
	Polished Gold Optic	13597990	71.80



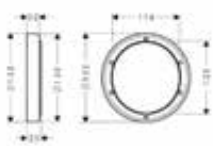

Measurements within scale drawings are in mm.

Technical specifications and units of measure are subject to change.

	finish	code no.	Euro
ShowerSelect Extension element · for installation between tiles and finish set · suitable for all shower and bath tub finish sets Ø 150 mm · diameter: 157 mm · extension length: 22 mm	Chrome Brushed Bronze Brushed Black Chrome Matt Black Matt White Polished Gold Optic	13593000 13593140 13593340 13593670 13593700 13593990	46.80 70.20 70.20 65.50 65.50 70.20
ShowerSelect Glass Extension element · for installation between tiles and finish set · diameter: 157 mm · extension length: 22 mm	Chrome	13604000	100.20
Extension element ShowerSelect FixFit Porter · for installation between tiles and finish set · extension length: 22 mm	Chrome	13601000	113.60
Optional parts: · **ShowerSelect** Thermostat for concealed installation for 2 functions with hose connection and shower holder	Chrome	15765000	766.10
Extension iBox universal basic set 2.5 cm · extension for basic set · extension length: 25 mm		13595000	50.40
Required parts: · Basic set iBox universal · Basic set iBox universal with shut-off unit		01800180 01850180	137.30 178.40
Fastening rail set for iBox universal		96615000	35.80
Flushing board iControl	Chrome	15956000	62.70

Measurements within scale drawings are in mm.

Mixer lines



FinishPlus	page 343		Metropol	page 355	
Metris	page 381		Finoris	page 401	
Vivenis	page 411		Talis	page 421	
Focus	page 451		Vernis	page 465	
Logis	page 489				

hansgrohe bathroom mixers

Product ranges at a glance

		Metropol		**Metris**	**Metris S**
				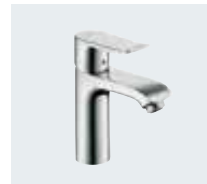	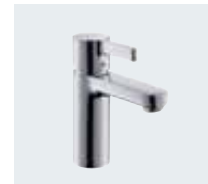
Finish	-000, -140, -340 -670, -700, -990	-000	-000	-000	-000
Standard	■	■	■	■	■
EcoSmart	■	■	■	■	■
Pillar tap	■			■	
LowFlow				■	■
CoolStart	■			■	
For open water heaters				■	
With swivel spout					■
With Pull-out tap					
Bidet	■	■		■	■
Select			■		
QuickClean	■	■	■	■	■
	page 356	page 360	page 356	page 382	page 393

		Talis S		**Focus**	**Vernis Shape**
			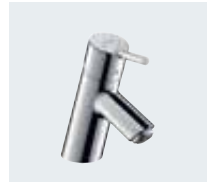		
Finish	-000	-000	-000	-000	-000, -670
Standard	■	■	■	■	■
EcoSmart	■	■	■	■	■
Pillar tap	■		■	■	■
LowFlow	■			■	
CoolStart	■			■	■
For open water heaters			■	■	
With swivel spout	■		■	■	■
With Pull-out tap					
Bidet	■	■	■	■	■
Select		■			
QuickClean	■	■	■	■	
	page 434	page 433	page 446	page 452	page 479

■ Available

Finoris	**Vivenis**	**Talis E**	
	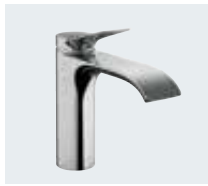	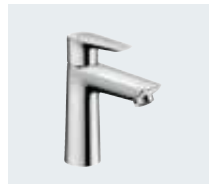	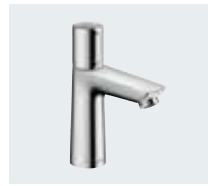
-000, -670, -700	-000, -670, -700	-000, -140, -340 -670, -700, -990	-000
■	■	■	■
■	■	■	■
■	■	■	
		■	
■		■	
		■	
■	■		
■			
■	■	■	
			■
■	■	■	■
page 402	page 412	page 423	page 422

Vernis Blend	**Logis**	
		
-000, -670	-000	-000
■	■	■
■	■	■
■		■
		■
■	■	■
		■
■		
■	■	■
page 466	page 491	page 490

FinishPlus



Hand showers	page 344		Shower sets	page 345	
Wall bars	page 344		Shower holder sets	page 344	
Shower hoses	page 347		Overhead showers	page 346	
Showerpipes	page 348		Thermostatic mixers for exposed installation	page 348	
Thermostatic mixers for concealed installation	page 348		Mixer lines	page 350	
Accessories	page 350		Wastes and overflow	page 352	
Kitchen mixers	page 352				

FinishPlus overview

Hand showers

	Rainfinity	Raindance Select E	Raindance Select S	Pulsify Select S	Pulsify S
					
Finish					
Chrome -000	■	■	■	■	■
Brushed Bronze -140	■	■	■		
Brushed Black Chrome -340	■	■	■		
Matt Black -670	■	■	■	■	■
Matt White -700	■	■	■	■	■
Polished Gold Optic -990	■	■	■		
Page	page 96	page 96	page 97	page 98	page 99

Wall bars

	Unica S Puro
	
Finish	
Chrome -000	■
Brushed Bronze -140	■
Brushed Black Chrome -340	■
Matt Black -670	■
Matt White -700	■
Polished Gold Optic -990	■
Page	page 147

Shower holder sets

	Rainfinity	Pulsify Select S
		
Finish		
Chrome -000	■	■
Brushed Bronze -140		
Brushed Black Chrome -340		
Matt Black -670		■
Matt White -700	■	■
Polished Gold Optic -990		
Page	page 154	page 156

■ Available

Shower sets

	Croma Select E	Vernis Blend
		
	■	■
	■	
	■	
	■	■
	■	
	■	
	page 100	page 104

	Pulisfy Select S
	
Finish	
Chrome -000	■
Brushed Bronze -140	
Brushed Black Chrome -340	
Matt Black -670	■
Matt White -700	■
Polished Gold Optic -990	
Page	page 110

Shower holder

	Pulsify S
	
	■
	■
	■
	page 157

	Porter E	Porter S
		
Finish		
Chrome -000	■	■
Brushed Bronze -140	■	■
Brushed Black Chrome -340	■	■
Matt Black -670	■	■
Matt White -700	■	■
Polished Gold Optic -990	■	■
Page	page 163	page 163

FinishPlus overview

Fixfit Porter wall outlets

	Rainfinity
	
Finish	
Chrome -000	■
Brushed Bronze -140	
Brushed Black Chrome -340	
Matt Black -670	
Matt White -700	■
Polished Gold Optic -990	
Page	page 164

FixFit Wall outlet

	FixFit E	FixFit S
		
Finish		
Chrome -000	■	■
Brushed Bronze -140	■	■
Brushed Black Chrome -340	■	■
Matt Black -670	■	■
Matt White -700	■	■
Polished Gold Optic -990	■	■
Page	page 165	page 165

Overhead showers

	Rainfinity	Raindance E	Raindance S	Pulsify S	Croma
				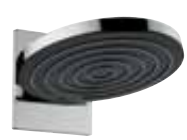	
Finish					
Chrome -000	■	■	■	■	■
Brushed Bronze -140	■	■			■
Brushed Black Chrome -340	■	■			■
Matt Black -670	■	■	■	■	■
Matt White -700	■	■	■	■	■
Polished Gold Optic -990	■	■			■
Page	page 181	page 193	page 197	page 202	page 207

■ Available

Shower hoses

FixFit Square	FixFit	Isiflex
		
Finish		
■	■	Chrome -000 ■
■	■	Brushed Bronze -140 ■
■	■	Brushed Black Chrome -340 ■
■	■	Matt Black -670 ■
■	■	Matt White -700 ■
■	■	Polished Gold Optic -990 ■
page 167	page 167	**Page** page 170

Vernis Blend	Vernis Shape	Shower arms	Ceiling connectors
			
■	■	■	■
		■	■
		■	■
■	■	■	■
		■	■
		■	■
page 213	page 214	page 215	page 217

FinishPlus overview

Body showers

	Rainfinity
	
Finish	
Chrome -000	■
Brushed Bronze -140	
Brushed Black Chrome -340	
Matt Black -670	
Matt White -700	■
Polished Gold Optic -990	
Page	page 219

Showerpipes

	Rainfinity	Raindance Select S
		
Finish		
Chrome -000	■	■
Brushed Bronze -140		■
Brushed Black Chrome -340		■
Matt Black -670		■
Matt White -700	■	■
Polished Gold Optic -990		■
Page	page 228	page 236

Thermostatic mixers for exposed installation

	ShowerTablet Select	Ecostat
		
Finish		
Chrome -000	■	■
Brushed Bronze -140		■
Brushed Black Chrome -340		■
Matt Black -670	■	■
Matt White -700	■	■
Polished Gold Optic -990		■
Page	page 288	page 294

Thermostatic mixers for concealed installation

	RainSelect
	
Finish	
Chrome -000	■
Brushed Bronze -140	■
Brushed Black Chrome -340	■
Matt Black -670	■
Matt White -700	■
Polished Gold Optic -990	■
Page	page 308

■ Available

Pulsify S	Croma Select S	Vernis Blend	Vernis Shape
			
■	■	■	■
	■		
	■		
■	■	■	■
■	■		
	■		
page 242	page 245	page 272	page 276

ShowerSelect	Shower Select S	Ecostat Square	Ecostat S	Extension elements
				
■	■	■	■	■
■	■	■	■	■
■	■	■	■	■
■	■	■	■	■
■	■	■	■	■
■	■	■	■	■
page 317	page 321	page 326	page 328	page 330

FinishPlus overview

Metropol

	Metropol
	
Finish	
Chrome -000	■
Brushed Bronze -140	■
Brushed Black Chrome -340	■
Matt Black -670	■
Matt White -700	■
Polished Gold Optic -990	■
Page	page 355

Finoris

	Finoris
	
Finish	
Chrome -000	■
Brushed Bronze -140	
Brushed Black Chrome -340	
Matt Black -670	■
Matt White -700	■
Polished Gold Optic -990	
Page	page 401

Vernis

	Vernis Blend	Vernis Shape
		
Finish		
Chrome -000	■	■
Brushed Bronze -140		
Brushed Black Chrome -340		
Matt Black -670	■	■
Matt White -700		
Polished Gold Optic -990		
Page	page 466	page 479

Accessories

	XtraStoris Original
	
Finish	
Chrome -000	
Brushed Bronze -140	
Brushed Black Chrome -340	
Matt Black -670	■
Matt White -700	■
Stainless Steel Optic -800	■
Polished Gold Optic -990	
Page	page 538

■ Available

Vivenis

	Vivenis
	
Finish	
Chrome -000	■
Brushed Bronze -140	
Brushed Black Chrome -340	
Matt Black -670	■
Matt White -700	■
Polished Gold Optic -990	
Page	page 411

Talis

	Talis E
	
Finish	
Chrome -000	■
Brushed Bronze -140	■
Brushed Black Chrome -340	■
Matt Black -670	■
Matt White -700	■
Polished Gold Optic -990	■
Page	page 421

XtraStoris Minimalistic	XtraStoris Rock	XtraStoris Individual	AddStoris	WallStoris
				
			■	
		■	■	
		■	■	
■	■	■	■	■
■	■	■	■	■
■	■	■		
		■	■	
page 538	page 539	page 539	page 544	page 554

FinishPlus overview

Wastes and overflow

	RainDrain Flex	RainDrain Match	Exafill S	sBox Finish set	Flexaplus
					
Finish					
Chrome -000	■	■	■	■	■
Brushed Bronze -140	■	■	■	■	■
Brushed Black Chrome -340	■	■	■	■	■
Matt Black -670	■	■	■	■	■
Matt White -700	■	■	■	■	■
Brushed Stainless Steel -800	■	■			
Polished Gold Optic -990	■	■	■	■	■
Page	page 571	page 579	page 590	page 593	page 595

Kitchen mixers

	Aqittura M91	Aquno Select M81	Metris Select M71	Talis M54	Focus M41
					
Finish					
Chrome -000	■	■	■	■	■
Brushed Bronze -140					
Brushed Black Chrome -340			■		
Matt Black -670	■	■	■	■	■
Matt White -700					
Stainless Steel Finish -800	■	■	■	■	■
Polished Gold Optic -990					
Page	page 630	page 634	page 635	page 653	page 658

■ Available

Wastes for basin/ bidet	Traps
	
■	■
■	■
■	■
■	■
■	■
■	■
page 597	page 598

Zesis M33	Vernis M35	Kitchen accessories
		
■	■	■
		■
■	■	■
■	■	■
page 665	page 670	page 688

Metropol®



Basin	page 356		Bidet	page 365	
Bath	page 367		Shower	page 378	

Basin



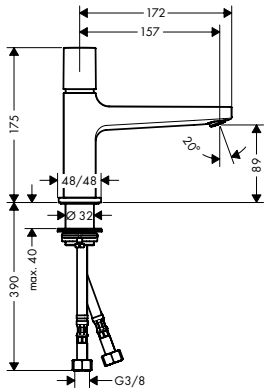

Basin mixer 100 Select with push-open waste set

- consists of: Basin mixer, waste set
- ComfortZone 100
- projection 157 mm
- spray type: normal spray
- maximum flow rate at 3 bar: 5 l/min
- Select cartridge with temperature control
- temperature limitation adjustable
- suitable for continuous flow water heaters
- push-open waste set G 1¼
- material waste set: metal
- connection type: G ⅜ connections
- connection dimension: DN15

finish	code no.	Euro
Chrome	32570000	319.70



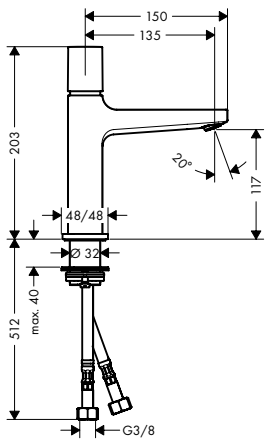

Basin mixer 110 Select with push-open waste set

- consists of: Basin mixer, waste set
- ComfortZone 110
- projection 135 mm
- spray type: normal spray
- maximum flow rate at 3 bar: 5 l/min
- Select cartridge with temperature control
- temperature limitation adjustable
- suitable for continuous flow water heaters
- push-open waste set G 1¼
- material waste set: metal
- connection type: G ⅜ connections
- connection dimension: DN15

finish	code no.	Euro
Chrome	32571000	331.30



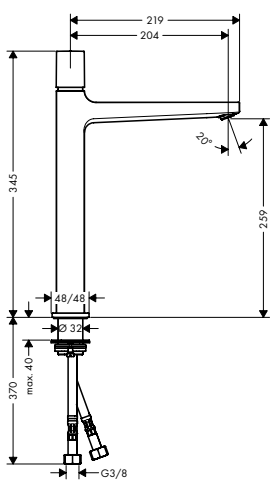

Basin mixer 260 Select with push-open waste set

- consists of: Basin mixer, waste set
- ComfortZone 260
- projection 204 mm
- spray type: normal spray
- maximum flow rate at 3 bar: 5 l/min
- Select cartridge with temperature control
- temperature limitation adjustable
- suitable for continuous flow water heaters
- push-open waste set G 1¼
- material waste set: metal
- connection type: G ⅜ connections
- connection dimension: DN15

finish	code no.	Euro
Chrome	32572000	456.90



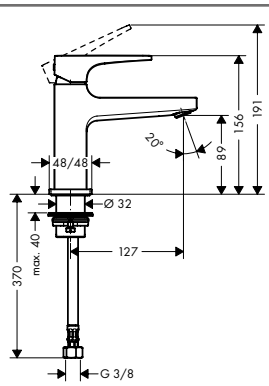

Pillar tap 100 with lever handle for cold water or pre-adjusted water without waste set

- ComfortZone 100
- projection 127 mm
- spray type: normal spray
- maximum flow rate at 3 bar: 5 l/min
- ceramic cartridge
- for cold water connection
- connection type: G ⅜ connections
- connection dimension: DN15

finish	code no.	Euro
Chrome	32501000	251.20

Measurements within scale drawings are in mm.

Technical specifications and units of measure are subject to change.

	finish	code no.	Euro



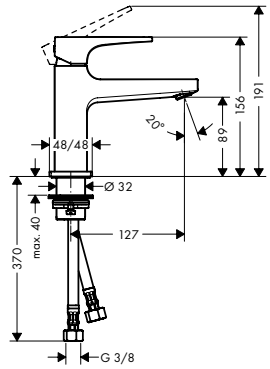

Single lever basin mixer 100 with lever handle for hand washbasins with push-open waste set

- consists of: single lever basin mixer, waste set
- ComfortZone 100
- projection 127 mm
- spray type: normal spray
- maximum flow rate at 3 bar: 5 l/ min
- ceramic cartridge
- temperature limitation adjustable
- suitable for continuous flow water heaters
- push-open waste set G 1¼
- material waste set: metal
- connection type: G ⅜ connections
- connection dimension: DN15

Chrome	32500000	268.30
Brushed Bronze	32500140	402.50
Brushed Black Chrome	32500340	402.50
Matt Black	32500670	375.70
Matt White	32500700	375.70
Polished Gold Optic	32500990	402.50

AirPower · EcoSmart · Comfort Zone · Quick Clean



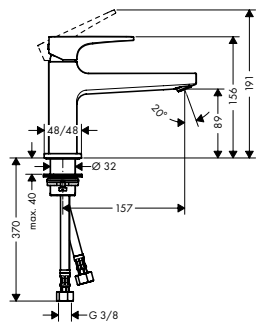

Single lever basin mixer 100 with lever handle and push-open waste set

- consists of: single lever basin mixer, waste set
- ComfortZone 100
- projection 157 mm
- spray type: normal spray
- maximum flow rate at 3 bar: 5 l/ min
- ceramic cartridge
- temperature limitation adjustable
- suitable for continuous flow water heaters
- push-open waste set G 1¼
- material waste set: metal
- connection type: G ⅜ connections
- connection dimension: DN15

Chrome	32502000	274.10

AirPower · EcoSmart · Comfort Zone · Quick Clean

Alternative products:

· Single lever basin mixer 100 CoolStart with lever handle and push-open waste set	Chrome 32503000	279.90



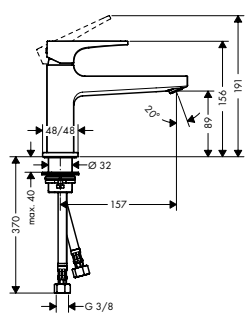

Single lever basin mixer 100 CoolStart with lever handle and push-open waste set

- consists of: single lever basin mixer, waste set
- ComfortZone 100
- projection 157 mm
- spray type: normal spray
- maximum flow rate at 3 bar: 5 l/ min
- ceramic cartridge
- temperature limitation adjustable
- suitable for continuous flow water heaters
- push-open waste set G 1¼
- material waste set: metal
- connection type: G ⅜ connections
- connection dimension: DN15
- cold water in middle position

Chrome	32503000	279.90

AirPower · EcoSmart · Comfort Zone · Quick Clean · CoolStart

Alternative products:

· Single lever basin mixer 100 with lever handle and push-open waste set	Chrome 32502000	274.10

Measurements within scale drawings are in mm.

Technical specifications and units of measure are subject to change.



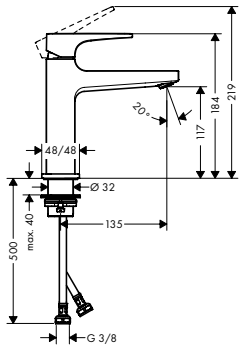

Single lever basin mixer 110 with lever handle and push-open waste set

- consists of: single lever basin mixer, waste set
- ComfortZone 110
- projection 135 mm
- spray type: normal spray
- maximum flow rate at 3 bar: 5 l/min
- ceramic cartridge
- temperature limitation adjustable
- suitable for continuous flow water heaters
- push-open waste set G 1¼
- material waste set: metal
- connection type: G ⅜ connections
- connection dimension: DN15

finish	code no.	Euro
Chrome	32507000	291.20
Brushed Bronze	32507140	436.90
Brushed Black	32507340	436.90
Chrome		
Matt Black	32507670	407.80
Matt White	32507700	407.80
Polished Gold Optic	32507990	436.90

AirPower · EcoSmart · Comfort Zone · Quick Clean

Alternative products:

· Single lever basin mixer 110 with lever handle and pop-up waste set	Chrome	32506000	285.60
· Single lever basin mixer 110 CoolStart with lever handle and push-open waste set	Chrome	32508000	296.90



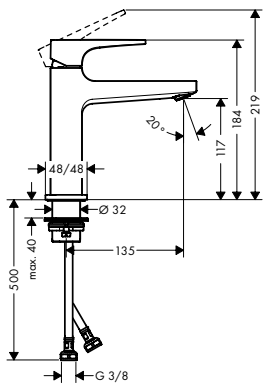

Single lever basin mixer 110 CoolStart with lever handle and push-open waste set

- consists of: single lever basin mixer, waste set
- ComfortZone 110
- projection 135 mm
- spray type: normal spray
- maximum flow rate at 3 bar: 5 l/min
- ceramic cartridge
- temperature limitation adjustable
- suitable for continuous flow water heaters
- push-open waste set G 1¼
- material waste set: metal
- connection type: G ⅜ connections
- connection dimension: DN15
- cold water in middle position

finish	code no.	Euro
Chrome	32508000	296.90

AirPower · EcoSmart · Comfort Zone · Quick Clean · CoolStart

Alternative products:

· Single lever basin mixer 110 with lever handle and pop-up waste set	Chrome	32506000	285.60
· Single lever basin mixer 110 with lever handle and push-open waste set	Chrome	32507000	291.20
	Brushed Bronze	32507140	436.90
	Brushed Black	32507340	436.90
	Chrome		
	Matt Black	32507670	407.80
	Matt White	32507700	407.80
	Polished Gold Optic	32507990	436.90

Measurements within scale drawings are in mm.

Technical specifications and units of measure are subject to change.



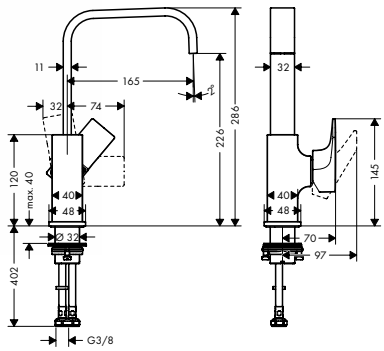

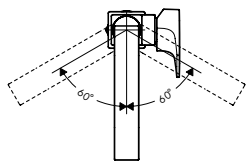

Single lever basin mixer 230 with lever handle and push-open waste set

- consists of: single lever basin mixer, waste set
- ComfortZone 230
- projection 165 mm
- swivel range 120°
- spray type: normal spray
- maximum flow rate at 3 bar: 5 l/min
- ceramic cartridge
- temperature limitation adjustable
- suitable for continuous flow water heaters
- push-open waste set G 1¼
- material waste set: metal
- connection type: G ⅜ connections
- connection dimension: DN15
- handle position on the side: bottom-side at the base body (not suitable for wash bowls)

finish	code no.	Euro
Chrome	32511000	399.80
Brushed Bronze	32511140	599.60
Brushed Black	32511340	599.60
Chrome Matt Black	32511670	559.60
Matt White	32511700	559.60
Polished Gold Optic	32511990	599.60

AirPower · EcoSmart · Comfort Zone

Alternative products:

- Single lever basin mixer 230 with loop handle and push-open waste set

Chrome	74511000	422.60



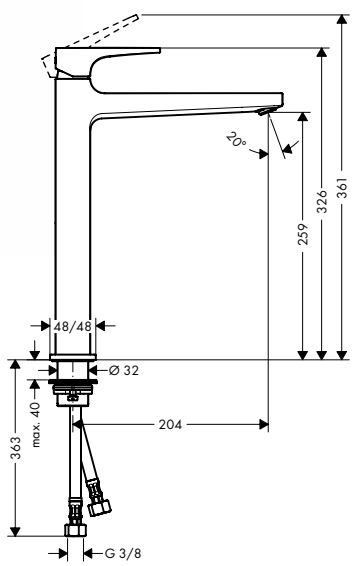

Single lever basin mixer 260 with lever handle for washbowls with push-open waste set

- consists of: single lever basin mixer, waste set
- ComfortZone 260
- projection 204 mm
- spray type: normal spray
- maximum flow rate at 3 bar: 5 l/min
- ceramic cartridge
- temperature limitation adjustable
- suitable for continuous flow water heaters
- push-open waste set G 1¼
- material waste set: metal
- connection type: G ⅜ connections
- connection dimension: DN15

Chrome	32512000	411.10
Brushed Bronze	32512140	616.60
Brushed Black	32512340	616.60
Chrome Matt Black	32512670	575.50
Matt White	32512700	575.50
Polished Gold Optic	32512990	616.60

AirPower · EcoSmart · Comfort Zone · Quick Clean

Measurements within scale drawings are in mm.

	finish	code no.	Euro



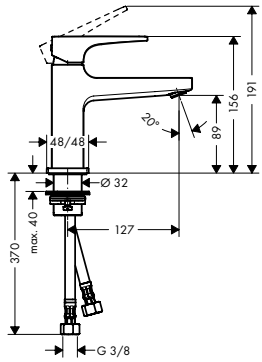

Single lever basin mixer 100 with loop handle for hand washbasins with push-open waste set

Chrome 74500000 291.20

AirPower EcoSmart Comfort Zone Quick Clean

- consists of: single lever basin mixer, waste set
- ComfortZone 100
- projection 127 mm
- spray type: normal spray
- maximum flow rate at 3 bar: 5 l/min
- ceramic cartridge
- temperature limitation adjustable
- suitable for continuous flow water heaters
- push-open waste set G 1¼
- material waste set: metal
- connection type: G ⅜ connections
- connection dimension: DN15



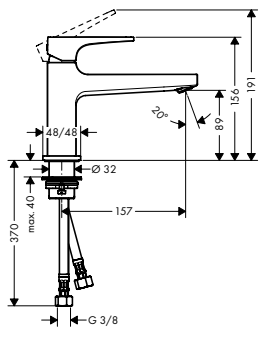

Single lever basin mixer 100 with loop handle and push-open waste set

Chrome 74502000 296.90

AirPower EcoSmart Comfort Zone Quick Clean

- consists of: single lever basin mixer, waste set
- ComfortZone 100
- projection 157 mm
- spray type: normal spray
- maximum flow rate at 3 bar: 5 l/min
- ceramic cartridge
- temperature limitation adjustable
- suitable for continuous flow water heaters
- push-open waste set G 1¼
- material waste set: metal
- connection type: G ⅜ connections
- connection dimension: DN15



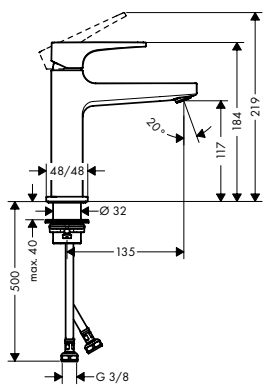

Single lever basin mixer 110 with loop handle and push-open waste set

Chrome 74507000 319.70

AirPower EcoSmart Comfort Zone Quick Clean

- consists of: single lever basin mixer, waste set
- ComfortZone 110
- projection 135 mm
- spray type: normal spray
- maximum flow rate at 3 bar: 5 l/min
- ceramic cartridge
- temperature limitation adjustable
- suitable for continuous flow water heaters
- push-open waste set G 1¼
- material waste set: metal
- connection type: G ⅜ connections
- connection dimension: DN15

Alternative products:

- Single lever basin mixer 110 with loop handle and pop-up waste set — Chrome 74506000 314.20

Measurements within scale drawings are in mm.

Technical specifications and units of measure are subject to change.

	finish	code no.	Euro

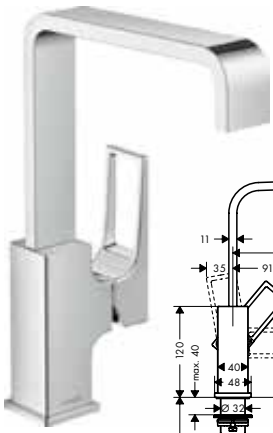

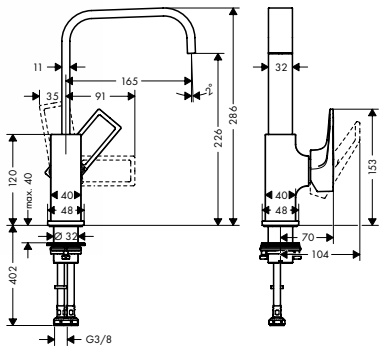

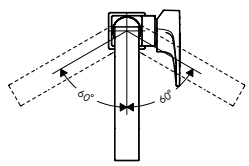

Single lever basin mixer 230 with loop handle and push-open waste set

- consists of: single lever basin mixer, waste set
- ComfortZone 230
- projection 165 mm
- swivel range 120°
- spray type: normal spray
- maximum flow rate at 3 bar: 5 l/min
- ceramic cartridge
- temperature limitation adjustable
- suitable for continuous flow water heaters
- push-open waste set G 1¼
- material waste set: metal
- connection type: G ⅜ connections
- connection dimension: DN15
- handle position on the side: bottom-side at the base body (not suitable for wash bowls)

Chrome	74511000		422.60

AirPower · EcoSmart · Comfort Zone

Alternative products:

- Single lever basin mixer 230 with lever handle and push-open waste set

Chrome	32511000	399.80
Brushed Bronze	32511140	599.60
Brushed Black Chrome	32511340	599.60
Matt Black	32511670	559.60
Matt White	32511700	559.60
Polished Gold Optic	32511990	599.60

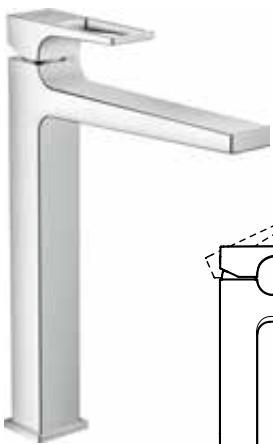

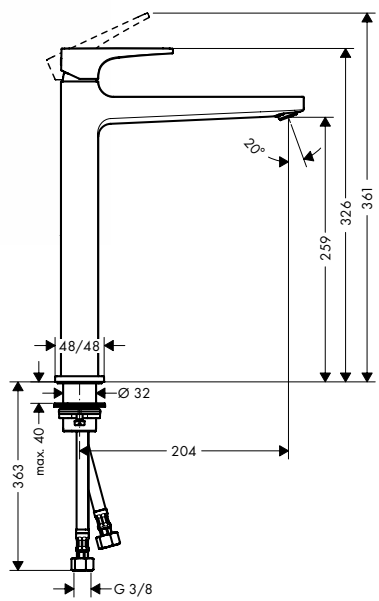

Single lever basin mixer 260 with loop handle for washbowls with push-open waste set

- consists of: single lever basin mixer, waste set
- ComfortZone 260
- projection 204 mm
- spray type: normal spray
- maximum flow rate at 3 bar: 5 l/min
- ceramic cartridge
- temperature limitation adjustable
- suitable for continuous flow water heaters
- push-open waste set G 1¼
- material waste set: metal
- connection type: G ⅜ connections
- connection dimension: DN15

Chrome	74512000		434.00

AirPower · EcoSmart · Comfort Zone · Quick Clean

Measurements within scale drawings are in mm.

	finish	code no.	Euro
Single lever basin mixer for concealed installation wall-mounted with lever handle and spout 22,5 cm	Chrome	32526000	365.50
	Brushed Bronze	32526140	548.20
	Brushed Black	32526340	548.20
	Chrome Matt Black	32526670	511.60
	Matt White	32526700	511.60
	Polished Gold Optic	32526990	548.20



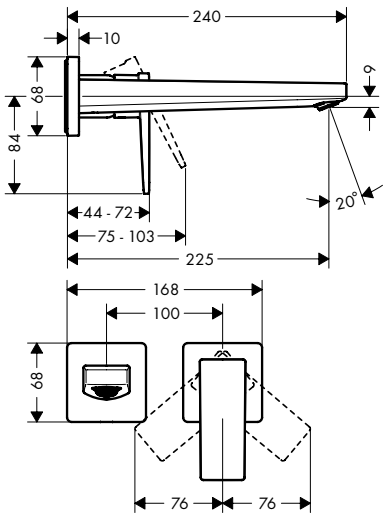

- consists of: single lever basin mixer for concealed installation wall-mounted, waste set
- projection 225 mm
- spray type: normal spray
- maximum flow rate at 3 bar: 5 l/min
- ceramic cartridge
- temperature limitation adjustable
- suitable for continuous flow water heaters
- non-closing waste set
- material waste set: metal
- connection type: basic set
- connection dimension: DN15
- handle can be positioned on the right or left, depends on the basic set installation

Alternative sizes:

· Single lever basin mixer for concealed installation wall-mounted with lever handle and spout 16,5 cm	Chrome	32525000	342.60

Required parts:

· Basic set for single lever basin mixer for concealed installation wall-mounted		13622180	220.50

Single lever basin mixer for concealed installation wall-mounted with loop handle and spout 22.5 cm	Chrome	74526000	388.40



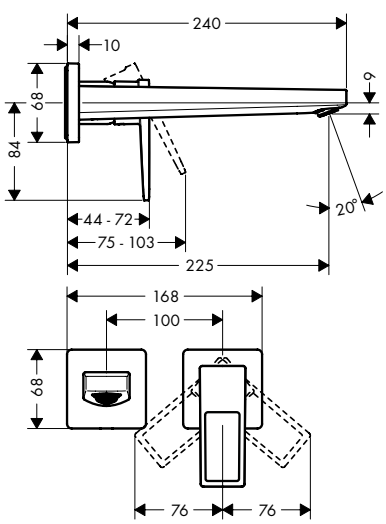

- consists of: single lever basin mixer for concealed installation wall-mounted, waste set
- projection 225 mm
- spray type: normal spray
- maximum flow rate at 3 bar: 5 l/min
- ceramic cartridge
- temperature limitation adjustable
- suitable for continuous flow water heaters
- non-closing waste set
- material waste set: metal
- connection type: basic set
- connection dimension: DN15
- handle can be positioned on the right or left, depends on the basic set installation

Alternative sizes:

· Single lever basin mixer for concealed installation wall-mounted with loop handle and spout 16.5 cm	Chrome	74525000	365.50

Required parts:

· Basic set for single lever basin mixer for concealed installation wall-mounted		13622180	220.50

Measurements within scale drawings are in mm.

Technical specifications and units of measure are subject to change.

	finish	code no.	Euro
 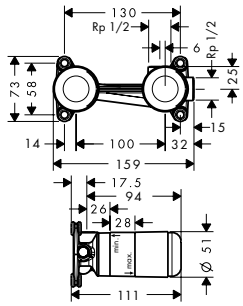			
Basic set for single lever basin mixer for concealed installation wall-mounted · installation depth: 44 - 72 mm · variable positioning of the mixer system, can be left or right of the spout · easy orientation due to support surfaces for the spirit level · with building protection cover against contamination during assembly · with dimension indication for exact determination of the installation depth · with pre-mounted fastening lugs for mounting in drywall and solidwall · sound-decoupled installation · connection dimension: DN15		13622180	220.50
Optional parts:			
· Extension set 2.5 cm		31971000	112.80
 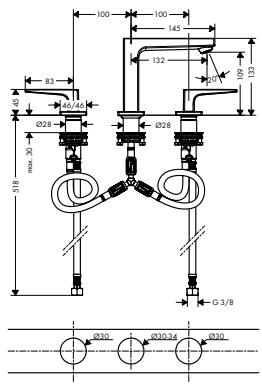			
3-hole basin mixer 110 with lever handles and push-open waste set · consists of: 3-hole basin mixer, waste set · ComfortZone 110 · projection 132 mm · maximum flow rate at 3 bar: 5 l/ min · ceramic valves hot/ cold 90° · suitable for continuous flow water heaters · push-open waste set G 1¼ · material waste set: metal · connection type: G ⅜ connections · connection dimension: DN15	Chrome	32514000	382.60
	AirPower · EcoSmart · Comfort Zone · Quick Clean		
Alternative products:			
· 3-hole basin mixer 110 with loop handles and push-open waste set	Chrome	74514000	405.60
 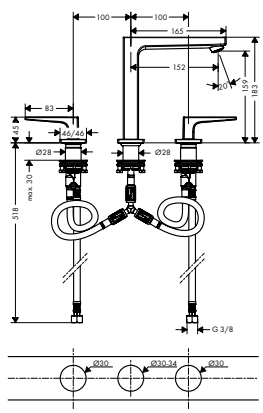			
3-hole basin mixer 160 with lever handles and push-open waste set · consists of: 3-hole basin mixer, waste set · ComfortZone 160 · projection 152 mm · maximum flow rate at 3 bar: 5 l/ min · ceramic valves hot/ cold 90° · suitable for continuous flow water heaters · push-open waste set G 1¼ · material waste set: metal · connection type: G ⅜ connections · connection dimension: DN15	Chrome Brushed Bronze Brushed Black Chrome Matt Black Matt White Polished Gold Optic	32515000 32515140 32515340 32515670 32515700 32515990	399.80 599.60 599.60 559.60 559.60 599.60
	AirPower · EcoSmart · Comfort Zone · Quick Clean		
Alternative products:			
· 3-hole basin mixer 160 with loop handles and push-open waste set	Chrome	74515000	422.60

Measurements within scale drawings are in mm.

Technical specifications and units of measure are subject to change.

	finish	code no.	Euro



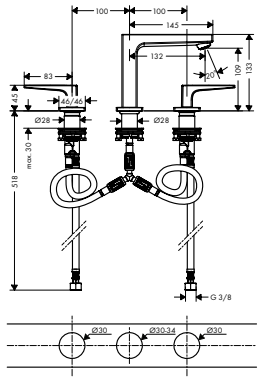

3-hole basin mixer 110 with loop handles and push-open waste set

Chrome 74514000 405.60

AirPower · EcoSmart · Comfort Zone · Quick Clean

- consists of: 3-hole basin mixer, waste set
- ComfortZone 110
- projection 132 mm
- maximum flow rate at 3 bar: 5 l/min
- ceramic valves hot/ cold 90°
- suitable for continuous flow water heaters
- push-open waste set G 1¼
- material waste set: metal
- connection type: G ⅜ connections
- connection dimension: DN15

Alternative products:

· 3-hole basin mixer 110 with lever handles and push-open waste set	Chrome	32514000	382.60



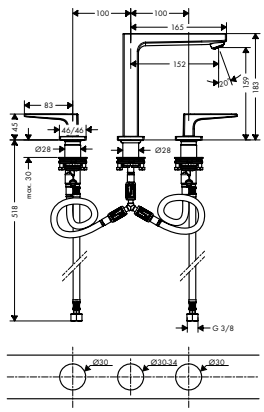

3-hole basin mixer 160 with loop handles and push-open waste set

Chrome 74515000 422.60

AirPower · EcoSmart · Comfort Zone · Quick Clean

- consists of: 3-hole basin mixer, waste set
- ComfortZone 160
- projection 152 mm
- maximum flow rate at 3 bar: 5 l/min
- ceramic valves hot/ cold 90°
- suitable for continuous flow water heaters
- push-open waste set G 1¼
- material waste set: metal
- connection type: G ⅜ connections
- connection dimension: DN15

Alternative products:

· 3-hole basin mixer 160 with lever handles and push-open waste set	Chrome	32515000	399.80
	Brushed Bronze	32515140	599.60
	Brushed Black Chrome	32515340	599.60
	Matt Black	32515670	559.60
	Matt White	32515700	559.60
	Polished Gold Optic	32515990	599.60



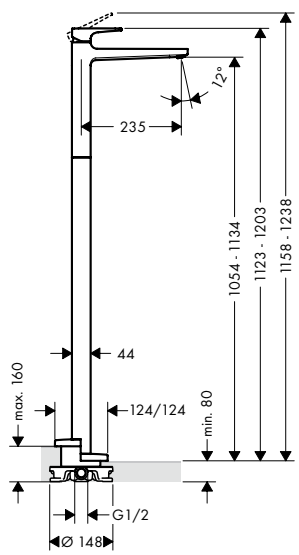

Single lever basin mixer floor-standing with lever handle without waste set

Chrome 32530000 1,199.20

AirPower · EcoSmart · Quick Clean

- projection 235 mm
- spray type: normal spray
- maximum flow rate at 3 bar: 5 l/min
- ceramic cartridge
- temperature limitation adjustable
- suitable for continuous flow water heaters
- connection type: basic set
- connection dimension: DN15

Alternative products:

· Single lever basin mixer floor-standing with loop handle without waste set	Chrome	74530000	1,222.00

Required parts:

· Basic set for mixers floor-standing		10452180	459.80

Optional parts:

· Sealing foil for basic set bath mixer floor-standing		96441000	127.30

Measurements within scale drawings are in mm.

Technical specifications and units of measure are subject to change.

	finish	code no.	Euro



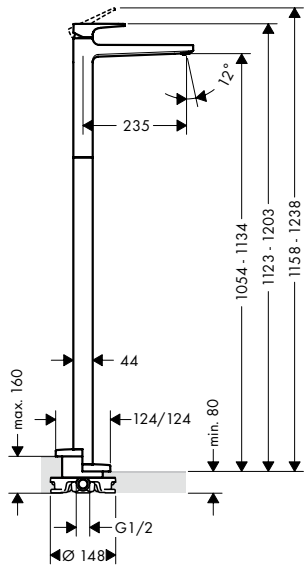

Single lever basin mixer floor-standing with loop handle without waste set

Chrome 74530000 1,222.00

AirPower · EcoSmart · Quick Clean

- projection 235 mm
- spray type: normal spray
- maximum flow rate at 3 bar: 5 l/min
- ceramic cartridge
- temperature limitation adjustable
- suitable for continuous flow water heaters
- connection type: basic set
- connection dimension: DN15

Alternative products:

- Single lever basin mixer floor-standing with lever handle without waste set — Chrome — 32530000 — 1,199.20

Required parts:

- Basic set for mixers floor-standing — 10452180 — 459.80

Optional parts:

- Sealing foil for basic set bath mixer floor-standing — 96441000 — 127.30



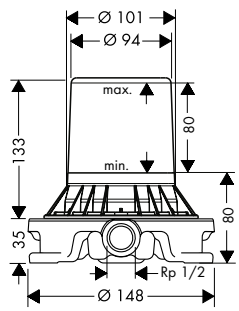

Basic set for mixers floor-standing

10452180 459.80

- for mounting on unfinished floor
- suitable for single lever bath mixer, single lever basin mixer and bath spout floor-standing
- connection dimension: DN15

Optional parts:

- Sealing foil for basic set bath mixer floor-standing — 96441000 — 127.30

Bidet



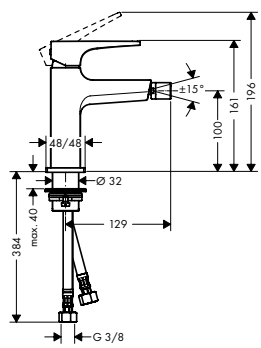

Single lever bidet mixer with lever handle and push-open waste set

Chrome	32520000	376.90
Brushed Bronze	32520140	565.40
Brushed Black	32520340	565.40
Chrome		
Matt Black	32520670	527.70
Matt White	32520700	527.70
Polished Gold Optic	32520990	565.40

AirPower

- consists of: single lever bidet mixer, waste set
- projection 129 mm
- ball-pivot joint
- spray type: laminar spray
- maximum flow rate at 3 bar: 7,2 l/min
- ceramic cartridge
- temperature limitation adjustable
- suitable for continous flow water heaters
- material waste set: metal
- connection type: G ⅜ connections
- connection dimension: DN15

Alternative products:

- Single lever bidet mixer with loop handle and push-open waste set — Chrome — 74520000 — 399.80

Measurements within scale drawings are in mm.

Technical specifications and units of measure are subject to change.

	finish	code no.	Euro



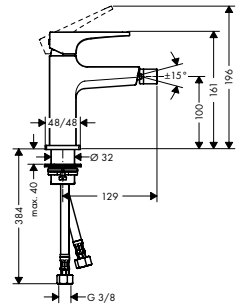

Single lever bidet mixer with loop handle and push-open waste set

	Chrome	74520000	399.80

AirPower

- consists of: single lever bidet mixer, waste set
- projection 129 mm
- ball-pivot joint
- spray type: laminar spray
- maximum flow rate at 3 bar: 7,2 l/ min
- ceramic cartridge
- temperature limitation adjustable
- suitable for continous flow water heaters
- material waste set: metal
- connection type: G ⅜ connections
- connection dimension: DN15

Alternative products:

- Single lever bidet mixer with lever handle and push-open waste set

Chrome	32520000	376.90
Brushed Bronze	32520140	565.40
Brushed Black Chrome	32520340	565.40
Matt Black	32520670	527.70
Matt White	32520700	527.70
Polished Gold Optic	32520990	565.40



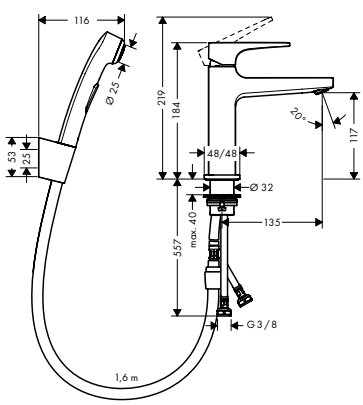

Single lever basin mixer with lever handle with bidette hand shower and shower hose 160 cm

	Chrome	32522000	382.60

AirPower EcoSmart Comfort Zone Quick Clean

- consists of: single lever basin mixer, bidette hand shower, shower holder, shower hose, waste set
- ComfortZone 110
- projection 135 mm
- maximum flow rate at 3 bar: 5 l/ min
- ceramic cartridge
- temperature limitation adjustable
- suitable for continuous flow water heaters
- push-open waste set G 1¼
- material waste set: metal
- connection type: G ⅜ connections
- connection dimension: DN15

Measurements within scale drawings are in mm.

Technical specifications and units of measure are subject to change.

	finish	code no.	Euro
Single lever basin mixer with loop handle with bidette hand shower and shower hose 160 cm	Chrome	74522000	405.60



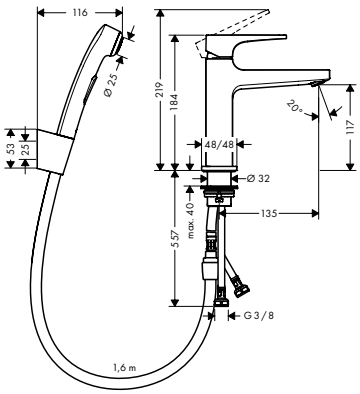

- consists of: single lever basin mixer, bidette hand shower, shower holder, shower hose, waste set
- ComfortZone 110
- projection 135 mm
- maximum flow rate at 3 bar: 5 l/min
- ceramic cartridge
- temperature limitation adjustable
- suitable for continuous flow water heaters
- push-open waste set G 1¼
- material waste set: metal
- connection type: G ⅜ connections
- connection dimension: DN15

Bath



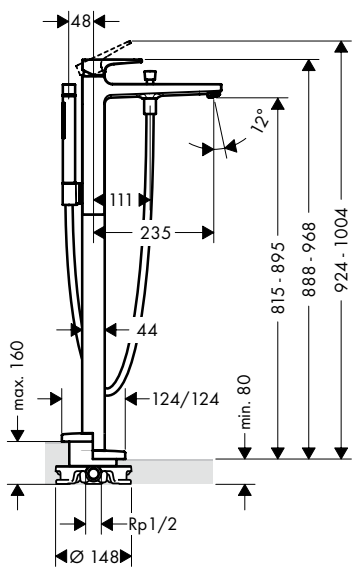

Single lever bath mixer floor-standing with lever handle	Chrome	32532000	1,770.20
	Brushed Bronze	32532140	2,655.40
	Brushed Black	32532340	2,655.40
	Chrome		
	Matt Black	32532670	2,478.30
	Matt White	32532700	2,478.30
	Polished Gold Optic	32532990	2,655.40

- consists of: single lever bath mixer floor standing, baton hand shower, shower hose, shower holder
- 2 functions
- projection 235 mm
- connection type: basic set
- spray type mixer: normal spray
- spray type hand shower: Rain, MonoRain
- maximum flow rate at 3 bar: 20 l/min
- flow rate for bath spout at 3 bar: 20 l/min
- min. operating pressure: 1 bar
- max. operating pressure: 10 bar
- ceramic cartridge
- temperature limitation adjustable
- diverter with automatic resetting
- non-return valve
- connection dimension: DN15

Alternative products:

· Single lever bath mixer floor-standing with loop handle	Chrome	74532000	1,793.00

Required parts:

· Basic set for mixers floor-standing		10452180	459.80

Optional parts:

· Sealing foil for basic set bath mixer floor-standing		96441000	127.30

Measurements within scale drawings are in mm.

Technical specifications and units of measure are subject to change.

	finish	code no.	Euro



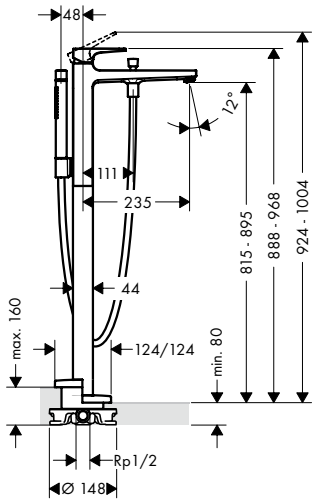

Single lever bath mixer floor-standing with loop handle

Chrome 74532000 1,793.00

AirPower Quick Clean

- consists of: single lever bath mixer floor standing, baton hand shower, shower hose, shower holder
- 2 functions
- projection 235 mm
- connection type: basic set
- spray type mixer: normal spray
- spray type hand shower: Rain, MonoRain
- flow rate for bath spout at 3 bar: 20 l/ min
- flow rate of hand shower at 3 bar: 14 l/ min
- min. operating pressure: 1 bar
- max. operating pressure: 10 bar
- ceramic cartridge
- temperature limitation adjustable
- diverter with automatic resetting
- non-return valve
- connection dimension: DN15

Alternative products:

· Single lever bath mixer floor-standing with lever handle	Chrome	32532000	1,770.20
	Brushed Bronze	32532140	2,655.40
	Brushed Black Chrome	32532340	2,655.40
	Matt Black	32532670	2,478.30
	Matt White	32532700	2,478.30
	Polished Gold Optic	32532990	2,655.40

Required parts:

· Basic set for mixers floor-standing		10452180	459.80

Optional parts:

· Sealing foil for basic set bath mixer floor-standing		96441000	127.30



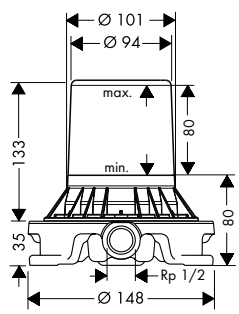

Basic set for mixers floor-standing

10452180 459.80

- for mounting on unfinished floor
- suitable for single lever bath mixer, single lever basin mixer and bath spout floor-standing
- connection dimension: DN15

Optional parts:

· Sealing foil for basic set bath mixer floor-standing		96441000	127.30

Measurements within scale drawings are in mm.

Technical specifications and units of measure are subject to change.



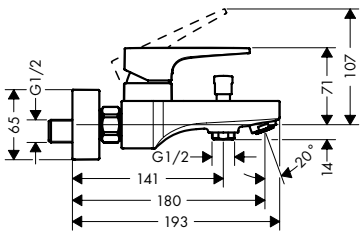

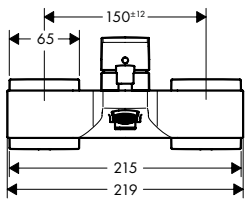

Single lever bath mixer for exposed installation with lever handle

- 2 functions
- projection 180 mm
- connection type: s-shaped connections
- centre distance: 150 ± 12 mm
- spray type mixer: normal spray
- flow rate for bath spout at 3 bar: 22 l/ min
- flow rate of hand shower at 3 bar: 16 l/ min
- min. operating pressure: 1 bar
- max. operating pressure: 10 bar
- ceramic cartridge
- temperature limitation adjustable
- diverter with automatic resetting
- protected against backflow, according to DIN EN1717
- suitable for continous flow water heaters
- connection dimension: DN15

Alternative products:

- Single lever bath mixer for exposed installation with loop handle

finish	code no.	Euro
Chrome	32540000	354.20
Brushed Bronze	32540140	531.20
Brushed Black	32540340	531.20
Chrome		
Matt Black	32540670	495.90
Matt White	32540700	495.90
Polished Gold Optic	32540990	531.20

AirPower Quick Clean

Chrome	74540000	376.90



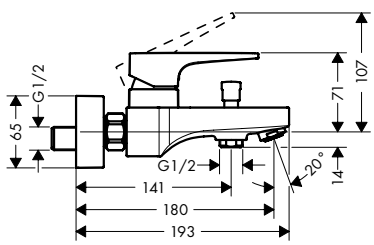

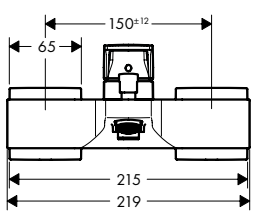

Single lever bath mixer for exposed installation with loop handle

- 2 functions
- projection 180 mm
- connection type: s-shaped connections
- centre distance: 150 ± 12 mm
- spray type mixer: normal spray
- flow rate for bath spout at 3 bar: 22 l/ min
- flow rate of hand shower at 3 bar: 16 l/ min
- min. operating pressure: 1 bar
- max. operating pressure: 10 bar
- ceramic cartridge
- temperature limitation adjustable
- diverter with automatic resetting
- protected against backflow, according to DIN EN1717
- with silencer
- suitable for continous flow water heaters
- connection dimension: DN15

Alternative products:

- Single lever bath mixer for exposed installation with lever handle

Chrome	74540000	376.90

AirPower Quick Clean

Chrome	32540000	354.20
Brushed Bronze	32540140	531.20
Brushed Black	32540340	531.20
Chrome		
Matt Black	32540670	495.90
Matt White	32540700	495.90
Polished Gold Optic	32540990	531.20

Measurements within scale drawings are in mm.

Technical specifications and units of measure are subject to change.



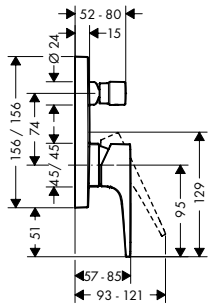

Single lever bath mixer for concealed installation with lever handle for iBox universal

- 2 functions
- connection type: basic set
- flow rate upper outlet: 21 l/ min
- flow rate lower outlet: 29 l/ min
- min. operating pressure: 1 bar
- max. operating pressure: 10 bar
- ceramic cartridge
- temperature limitation adjustable
- diverter with automatic resetting
- with silencer

	finish	code no.	Euro
	Chrome	32545000	239.90
	Brushed Bronze	32545140	359.80
	Brushed Black	32545340	359.80
	Chrome Matt Black	32545670	335.90
	Matt White	32545700	335.90
	Polished Gold Optic	32545990	359.80
Alternative products:			
· Single lever bath mixer for concealed installation with lever handle and integrated security combination according to EN1717 for iBox universal	Chrome	32546000	342.60
	Brushed Bronze	32546140	513.90
	Brushed Black	32546340	513.90
	Chrome Matt Black	32546670	479.60
	Matt White	32546700	479.60
	Polished Gold Optic	32546990	513.90
· Single lever bath mixer for concealed installation with loop handle for iBox universal	Chrome	74545000	262.80
Required parts:			
· Basic set iBox universal		01800180	137.30
Optional parts:			
· Extension element	Chrome	13593000	46.80
	Brushed Bronze	13593140	70.20
	Brushed Black	13593340	70.20
	Chrome Matt Black	13593670	65.50
	Matt White	13593700	65.50
	Polished Gold Optic	13593990	70.20

Measurements within scale drawings are in mm.

Technical specifications and units of measure are subject to change.

	finish	code no.	Euro
 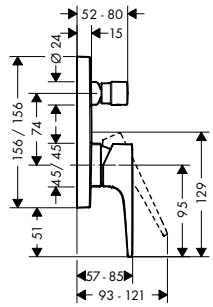			
Single lever bath mixer for concealed installation with loop handle for iBox universal · 2 functions · connection type: basic set · flow rate upper outlet: 21 l/min · flow rate lower outlet: 29 l/min · min. operating pressure: 1 bar · max. operating pressure: 10 bar · ceramic cartridge · temperature limitation adjustable · diverter with automatic resetting · with silencer	Chrome	74545000	262.80
Alternative products:			
· Single lever bath mixer for concealed installation with loop handle and integrated security combination according to EN1717 for iBox universal	Chrome	74546000	365.50
· Single lever bath mixer for concealed installation with lever handle for iBox universal	Chrome	32545000	239.90
	Brushed Bronze	32545140	359.80
	Brushed Black Chrome	32545340	359.80
	Matt Black	32545670	335.90
	Matt White	32545700	335.90
	Polished Gold Optic	32545990	359.80
Required parts:			
· Basic set iBox universal		01800180	137.30
Optional parts:			
· Extension element	Chrome	13593000	46.80
 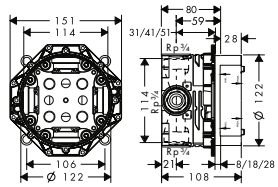			
Basic set iBox universal · suitable for all shower, bath tub and thermostat finish sets for concealed installation · connection thread Rp ¾ · rotationally-symmetric installation · sound-decoupled installation · connection dimension: DN20		01800180	137.30
Alternative products:			
· Basic set iBox universal with shut-off unit		01850180	178.40
Optional parts:			
· Extension iBox universal basic set 2.5 cm		13595000	50.40
· Fastening rail set for iBox universal		96615000	35.80
· Assembly aid for iBox universal		93500000	13.00
 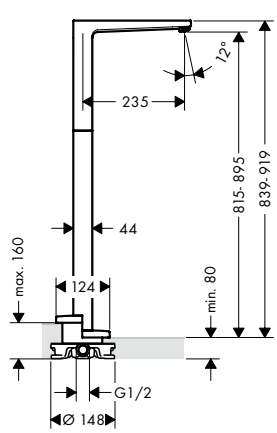			
Bath spout floor-standing · 1 function · connection type: basic set · projection 235 mm · free-standing installation · maximum flow rate at 3 bar: 21 l/min · spray type: normal spray	Chrome	32531000	913.70
Required parts:			
· Basic set for mixers floor-standing		10452180	459.80
Optional parts:			
· Sealing foil for basic set bath mixer floor-standing		96441000	127.30

Measurements within scale drawings are in mm.

	finish	code no.	Euro
 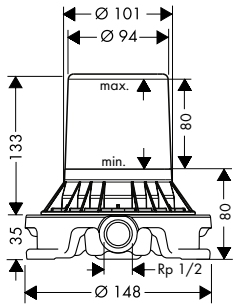			
Basic set for mixers floor-standing · for mounting on unfinished floor · suitable for single lever bath mixer, single lever basin mixer and bath spout floor-standing · connection dimension: DN15		10452180	459.80
Optional parts: · Sealing foil for basic set bath mixer floor-standing		96441000	127.30
 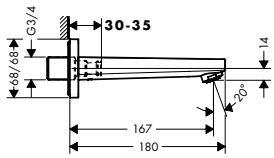			
Bath spout · 1 function · connection type: G ¾ · projection 167.5 mm · wall-mounted · maximum flow rate at 3 bar: 21 l/min · spray type: normal spray	Chrome	32542000	228.40
 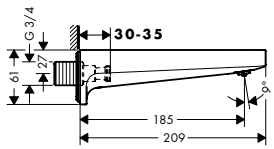 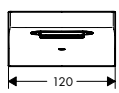			
Bath spout · 1 function · projection 185 mm · wall-mounted · maximum flow rate at 3 bar: 21 l/min · connection dimension: DN20 · spray type: wide flood jet	Chrome Brushed Bronze Brushed Black Chrome Matt Black Matt White Polished Gold Optic	32543000 32543140 32543340 32543670 32543700 32543990	342.60 513.90 513.90 479.60 479.60 513.90
 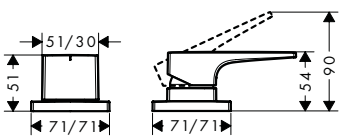			
2-hole rim mounted single lever bath mixer with lever handle · 2 functions · connection type: basic set · min. operating pressure: 1 bar · max. operating pressure: 10 bar · ceramic cartridge · temperature limitation adjustable · connection dimension: DN15	Chrome	32548000	285.60
Alternative products: · 2-hole rim mounted single lever bath mixer with loop handle	Chrome	74548000	308.40
Required parts: · Basic set for 2-hole rim mounted bath mixer		13159180	210.00

Measurements within scale drawings are in mm.

Technical specifications and units of measure are subject to change.

	finish	code no.	Euro
2-hole rim mounted single lever bath mixer with loop handle · 2 functions · connection type: basic set · min. operating pressure: 1 bar · max. operating pressure: 10 bar · ceramic cartridge · temperature limitation adjustable · connection dimension: DN15	Chrome	74548000	308.40
Alternative products:			
· 2-hole rim mounted single lever bath mixer with lever handle	Chrome	32548000	285.60
Required parts:			
· Basic set for 2-hole rim mounted bath mixer		13159180	210.00



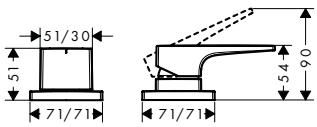

Basic set for 2-hole rim mounted bath mixer · suitable for remote spout · connection thread: G ½ · connection dimension: DN15 · ceramic cartridge		13159180	210.00
Optional parts:			
· Flexible connection tube 80 cm		58192000	109.70
· Connection tube set for 2-hole rim mounted thermostatic bath mixer		96387000	55.60
· Rim mounted bath set with hand shower	Chrome	19418000	431.20



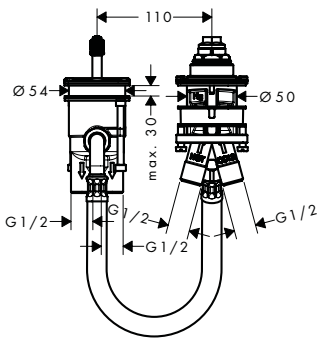

3-hole rim mounted single lever bath mixer with lever handle for Secuflex · consists of: 3-hole rim mounted single lever bath mixer, hand shower, shower holder · 2 functions · projection 197 mm · connection type: basic set · spray type mixer: normal spray · spray type hand shower: Rain, RainAir, Whirl · maximum pull-out length of hand shower: 1.10 m · maximum flow rate at 3 bar: 19 l/ min · flow rate for bath spout at 3 bar: 19 l/ min · flow rate of hand shower at 3 bar: 15 l/ min · min. operating pressure: 1 bar · max. operating pressure: 10 bar · ceramic cartridge · temperature limitation adjustable · connection dimension: DN15	Chrome	32550000	685.20
Consisting of:			
· Hand shower 120 3jet (# 26530000)			
Alternative products:			
· 3-hole rim mounted single lever bath mixer with loop handle for Secuflex	Chrome	74550000	708.10
Required parts:			
· Basic set for 3-hole rim mounted single lever bath mixer		13437180	686.60



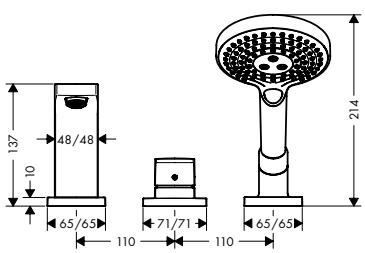

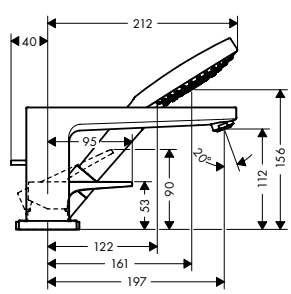

Measurements within scale drawings are in mm.

Technical specifications and units of measure are subject to change.

	finish	code no.	Euro



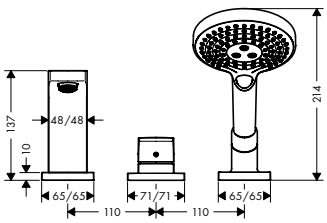

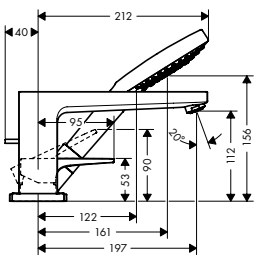

3-hole rim mounted single lever bath mixer with loop handle for Secuflex

Chrome | 74550000 | 708.10

AirPower | Quick Clean

- consists of: 3-hole rim mounted single lever bath mixer, hand shower, shower holder
- 2 functions
- projection 197 mm
- connection type: basic set
- spray type mixer: normal spray
- spray type hand shower: Rain, RainAir, Whirl
- maximum pull-out length of hand shower: 1.10 m
- maximum flow rate at 3 bar: 19 l/min
- flow rate for bath spout at 3 bar: 19 l/min
- flow rate of hand shower at 3 bar: 15 l/min
- min. operating pressure: 1 bar
- max. operating pressure: 10 bar
- ceramic cartridge
- temperature limitation adjustable
- connection dimension: DN15

Consisting of:

- Hand shower 120 3jet (# 26530000)

Alternative products:

- 3-hole rim mounted single lever bath mixer with lever handle for Secuflex — Chrome | 32550000 | 685.20

Required parts:

- Basic set for 3-hole rim mounted single lever bath mixer — 13437180 | 686.60



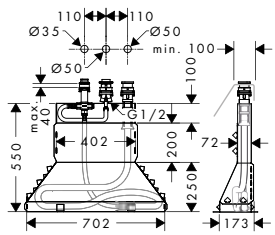

Basic set for 3-hole rim mounted single lever bath mixer

13437180 | 686.60

- consists of: basic set, shower hose, Secubox
- maximum pull-out length of hand shower: 1.10 m
- connection thread: G ½
- connection dimension: DN15

Optional parts:

- Secuflex insert extension — 98806000 | 4.10

Measurements within scale drawings are in mm.

Technical specifications and units of measure are subject to change.

	finish	code no.	Euro



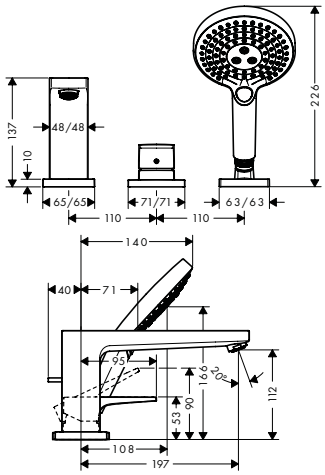

3-hole rim mounted single lever bath mixer with lever handle

Chrome | 32551000 | 514.00

AirPower | Quick Clean

- consists of: 3-hole rim mounted single lever bath mixer, hand shower, shower holder
- 2 functions
- projection 197 mm
- connection type: basic set
- spray type mixer: normal spray
- spray type hand shower: Rain, RainAir, Whirl
- maximum pull-out length of hand shower: 1.60 m
- maximum flow rate at 3 bar: 19 l/ min
- flow rate of hand shower at 3 bar: 14 l/ min
- min. operating pressure: 1 bar
- max. operating pressure: 10 bar
- ceramic valves hot/ cold 180°
- temperature limitation adjustable
- connection dimension: DN15

Consisting of:
- Hand shower 120 3jet (# 26530000)

Required parts:
- Basic set for 3-hole rim mounted single lever bath mixer — 13439180 | 350.10



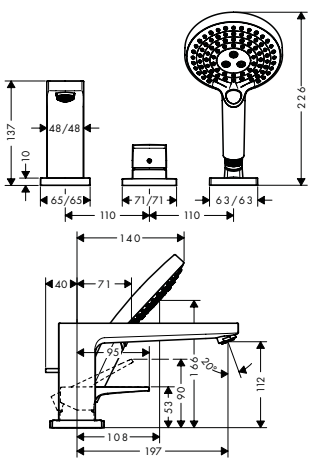

3-hole rim mounted single lever bath mixer with loop handle

Chrome | 74551000 | 536.70

AirPower | Quick Clean

- consists of: 3-hole rim mounted single lever bath mixer, hand shower, shower holder, shower hose
- 2 functions
- projection 197 mm
- connection type: basic set
- spray type mixer: normal spray
- spray type hand shower: Rain, RainAir, Whirl
- maximum pull-out length of hand shower: 1.60 m
- flow rate for bath spout at 3 bar: 19 l/ min
- flow rate of hand shower at 3 bar: 14 l/ min
- min. operating pressure: 1 bar
- max. operating pressure: 10 bar
- ceramic cartridge
- temperature limitation adjustable
- connection dimension: DN15

Consisting of:
- Hand shower 120 3jet (# 26530000)

Required parts:
- Basic set for 3-hole rim mounted single lever bath mixer — 13439180 | 350.10



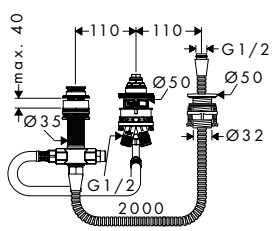

Basic set for 3-hole rim mounted single lever bath mixer

13439180 | 350.10

- consists of: basic set, shower holder, shower hose
- maximum pull-out length of hand shower: 1.60 m
- maintenance opening required
- connection dimension: G ½

Measurements within scale drawings are in mm.

	finish	code no.	Euro



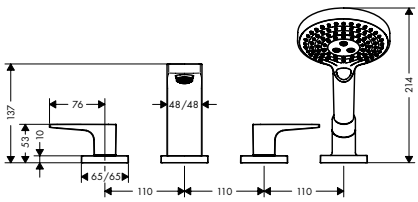

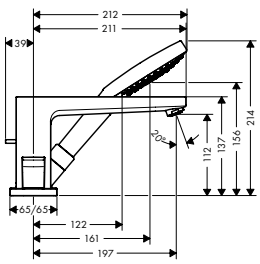

4-hole rim mounted bath mixer with lever handles for Secuflex

Chrome | 32552000 | 685.20

AirPower | Quick Clean

- consists of: 4-hole rim mounted bath mixer, hand shower, shower holder
- 2 functions
- projection 197 mm
- connection type: basic set
- spray type mixer: normal spray
- spray type hand shower: Rain, RainAir, Whirl
- maximum pull-out length of hand shower: 1.10 m
- flow rate for bath spout at 3 bar: 24 l/ min
- flow rate of hand shower at 3 bar: 15 l/ min
- min. operating pressure: 1 bar
- max. operating pressure: 10 bar
- ceramic valves hot/ cold 90°
- connection dimension: DN15

Consisting of:
- Hand shower 120 3jet (# 26530000)

Required parts:
- Basic set for 4-hole rim mounted bath mixer — 13444180 — 838.00



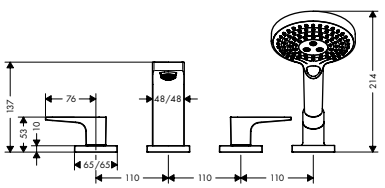

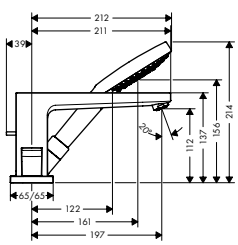

4-hole rim mounted bath mixer with loop handles for Secuflex

Chrome | 74552000 | 708.10

AirPower | Quick Clean

- consists of: 4-hole rim mounted bath mixer, hand shower, shower holder
- 2 functions
- projection 197 mm
- connection type: basic set
- spray type mixer: normal spray
- spray type hand shower: Rain, RainAir, Whirl
- maximum pull-out length of hand shower: 1.10 m
- flow rate for bath spout at 3 bar: 24 l/ min
- flow rate of hand shower at 3 bar: 15 l/ min
- min. operating pressure: 1 bar
- max. operating pressure: 10 bar
- ceramic valves hot/ cold 90°
- connection dimension: DN15

Consisting of:
- Hand shower 120 3jet (# 26530000)

Required parts:
- Basic set for 4-hole rim mounted bath mixer — 13444180 — 838.00



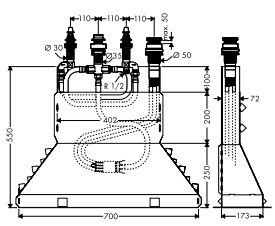

Basic set for 4-hole rim mounted bath mixer

13444180 | 838.00

- consists of: basic set, shower hose, Secubox
- maximum pull-out length of hand shower: 1.10 m
- connection dimension: DN15

Optional parts:
- Secuflex insert extension — 98806000 — 4.10

Measurements within scale drawings are in mm.

Technical specifications and units of measure are subject to change.

	finish	code no.	Euro



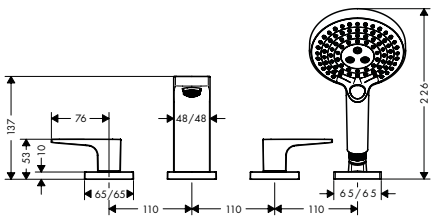

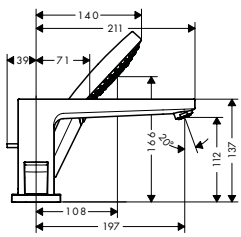

4-hole rim mounted bath mixer with lever handles

Chrome | 32553000 | 514.00

AirPower | Quick Clean

- consists of: 4-hole rim mounted bath mixer, hand shower, shower holder
- 2 functions
- projection 197 mm
- connection type: basic set
- spray type mixer: normal spray
- spray type hand shower: Rain, RainAir, Whirl
- maximum pull-out length of hand shower: 1.60 m
- flow rate for bath spout at 3 bar: 23 l/ min
- flow rate of hand shower at 3 bar: 15 l/ min
- min. operating pressure: 1 bar
- max. operating pressure: 10 bar
- ceramic valves hot/ cold 90°
- connection dimension: DN15

Consisting of:

- Hand shower 120 3jet (# 26530000)

Required parts:

- Basic set for 4-hole rim mounted bath mixer — 13244180 — 289.00



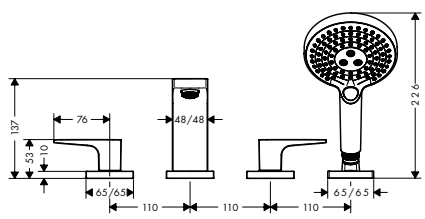

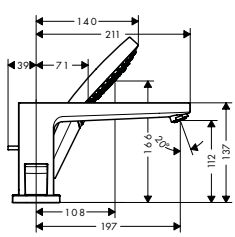

4-hole rim mounted bath mixer with loop handles

Chrome | 74553000 | 536.70

AirPower | Quick Clean

- consists of: 4-hole rim mounted bath mixer, hand shower, shower holder
- 2 functions
- projection 197 mm
- connection type: basic set
- spray type mixer: normal spray
- spray type hand shower: Rain, RainAir, Whirl
- maximum pull-out length of hand shower: 1.60 m
- flow rate for bath spout at 3 bar: 23 l/ min
- flow rate of hand shower at 3 bar: 15 l/ min
- min. operating pressure: 1 bar
- max. operating pressure: 10 bar
- ceramic valves hot/ cold 90°
- connection dimension: DN15

Consisting of:

- Hand shower 120 3jet (# 26530000)

Required parts:

- Basic set for 4-hole rim mounted bath mixer — 13244180 — 289.00

Measurements within scale drawings are in mm.

	finish	code no.	Euro



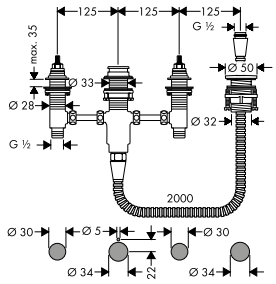

Basic set for 4-hole rim mounted bath mixer

13244180 — 289.00

- consists of: basic set, shower holder, shower hose
- maximum pull-out length of hand shower: 1.60 m
- maintenance opening required
- suitable for 4-hole rim mounted bath mixer
- connection thread: G ½
- connection dimension: DN15
- ceramic valves hot/ cold 90°

Shower



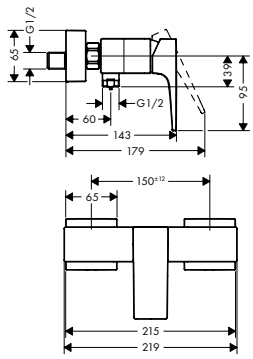

Single lever shower mixer for exposed installation with lever handle

- 1 function
- connection type: s-shaped connections
- centre distance: 150 ± 12 mm
- maximum flow rate at 3 bar: 16 l/ min
- flow rate of hand shower at 3 bar: 16 l/ min
- ceramic cartridge
- min. operating pressure: 1 bar
- max. operating pressure: 10 bar
- temperature limitation adjustable
- non-return valve
- with silencer
- hose connection DN15
- connection dimension: DN15

Chrome	32560000	239.90
Brushed Bronze	32560140	359.80
Brushed Black	32560340	359.80
Chrome		
Matt Black	32560670	335.90
Matt White	32560700	335.90
Polished Gold Optic	32560990	359.80

Alternative products:

- Single lever shower mixer for exposed installation with loop handle

Chrome	74560000	262.80



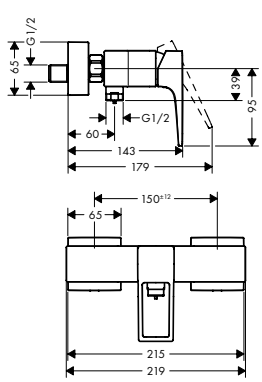

Single lever shower mixer for exposed installation with loop handle

Chrome — 74560000 — 262.80

- 1 function
- connection type: s-shaped connections
- centre distance: 150 ± 12 mm
- maximum flow rate at 3 bar: 33 l/ min
- ceramic cartridge
- min. operating pressure: 1 bar
- max. operating pressure: 10 bar
- temperature limitation adjustable
- non-return valve
- with silencer
- hose connection DN15
- connection dimension: DN15

Alternative products:

- Single lever shower mixer for exposed installation with lever handle

Chrome	32560000	239.90
Brushed Bronze	32560140	359.80
Brushed Black	32560340	359.80
Chrome		
Matt Black	32560670	335.90
Matt White	32560700	335.90
Polished Gold Optic	32560990	359.80

Measurements within scale drawings are in mm.

Technical specifications and units of measure are subject to change.



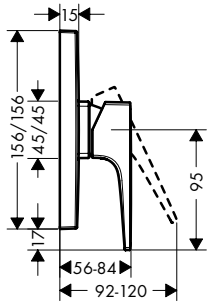

Single lever shower mixer for concealed installation with lever handle for iBox universal

- 1 function
- connection type: basic set
- maximum flow rate at 3 bar: 29,3 l/min
- ceramic cartridge
- min. operating pressure: 1 bar
- max. operating pressure: 10 bar
- temperature limitation adjustable
- with silencer

	finish	code no.	Euro
	Chrome	32565000	222.80
	Brushed Bronze	32565140	334.10
	Brushed Black	32565340	334.10
	Chrome Matt Black	32565670	311.90
	Matt White	32565700	311.90
	Polished Gold Optic	32565990	334.10

Alternative products:

- Single lever shower mixer for concealed installation with loop handle for iBox universal

Chrome	74565000	245.50

Required parts:

- Basic set iBox universal

	01800180	137.30

Optional parts:

- Extension element

Chrome	13593000	46.80
Brushed Bronze	13593140	70.20
Brushed Black	13593340	70.20
Chrome Matt Black	13593670	65.50
Matt White	13593700	65.50
Polished Gold Optic	13593990	70.20



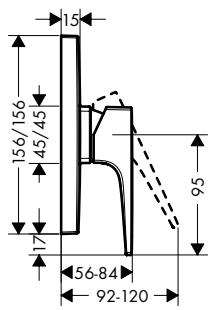

Single lever shower mixer for concealed installation with loop handle for iBox universal

- 1 function
- connection type: basic set
- maximum flow rate at 3 bar: 29,3 l/min
- ceramic cartridge
- min. operating pressure: 1 bar
- max. operating pressure: 10 bar
- temperature limitation adjustable
- with silencer

Chrome	74565000	245.50

Alternative products:

- Single lever shower mixer for concealed installation with lever handle for iBox universal

Chrome	32565000	222.80
Brushed Bronze	32565140	334.10
Brushed Black	32565340	334.10
Chrome Matt Black	32565670	311.90
Matt White	32565700	311.90
Polished Gold Optic	32565990	334.10

Required parts:

- Basic set iBox universal

	01800180	137.30

Optional parts:

- Extension element

Chrome	13593000	46.80

Measurements within scale drawings are in mm.

Technical specifications and units of measure are subject to change.



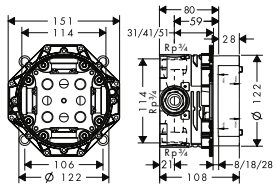

	finish	code no.	Euro
Basic set iBox universal		01800180	137.30
· suitable for all shower, bath tub and thermostat finish sets for concealed installation · connection thread Rp ¾ · rotationally-symmetric installation · sound-decoupled installation · connection dimension: DN20			
Alternative products:			
· Basic set iBox universal with shut-off unit		01850180	178.40
Optional parts:			
· Extension iBox universal basic set 2.5 cm		13595000	50.40
· Fastening rail set for iBox universal		96615000	35.80
· Assembly aid for iBox universal		93500000	13.00

Measurements within scale drawings are in mm.

Technical specifications and units of measure are subject to change.

Metris®



Metris page 382



Metris S page 393



Basin

	finish	code no.	Euro



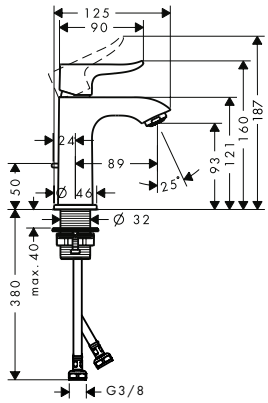

Single lever basin mixer 100 for hand washbasins with pop-up waste set

Chrome — 31088000 — 234.90

AirPower · EcoSmart · Comfort Zone · Quick Clean

- consists of: single lever basin mixer, waste set
- ComfortZone 100
- projection 89 mm
- spray type: normal spray
- maximum flow rate at 3 bar: 5 l/min
- ceramic cartridge
- temperature limitation adjustable
- suitable for continuous flow water heaters
- pop-up waste set G 1¼
- material waste set: metal
- connection type: G ⅜ connections
- connection dimension: DN15

Alternative products:

- Single lever basin mixer 100 for hand washbasins without waste set — Chrome — 31186000 — 227.20



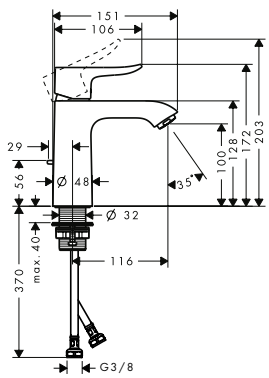

Single lever basin mixer 110 with pop-up waste set

Chrome — 31080000 — 249.40

AirPower · EcoSmart · Comfort Zone · Quick Clean

- consists of: single lever basin mixer, waste set
- ComfortZone 110
- projection 116 mm
- spray type: normal spray
- maximum flow rate at 3 bar: 5 l/min
- ceramic cartridge
- temperature limitation adjustable
- suitable for continuous flow water heaters
- pop-up waste set G 1¼
- material waste set: metal
- connection type: G ⅜ connections
- connection dimension: DN15

Alternative products:

- Single lever basin mixer 110 without waste set — Chrome — 31084000 — 242.00
- Single lever basin mixer 110 LowFlow with pop-up waste set — Chrome — 31203000 — 253.70
- Single lever basin mixer 110 LowFlow without waste set — Chrome — 31204000 — 247.70
- Single lever basin mixer 110 for vented hot water cylinders with pop-up waste set — Chrome — 31074000 — 362.10



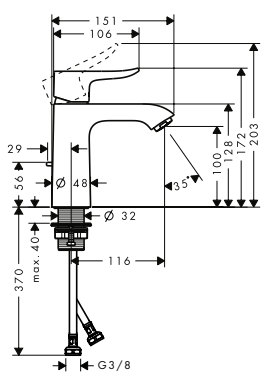

Single lever basin mixer 110 CoolStart with pop-up waste set

Chrome — 31121000 — 253.70

AirPower · EcoSmart · Comfort Zone · Quick Clean · CoolStart

- consists of: single lever basin mixer, waste set
- ComfortZone 110
- spray type: normal spray
- maximum flow rate at 3 bar: 5 l/min
- ceramic cartridge
- temperature limitation adjustable
- suitable for continuous flow water heaters
- pop-up waste set G 1¼
- material waste set: metal
- connection type: G ⅜ connections
- connection dimension: DN15
- cold water in middle position

Measurements within scale drawings are in mm.

Technical specifications and units of measure are subject to change.

	finish	code no.	Euro



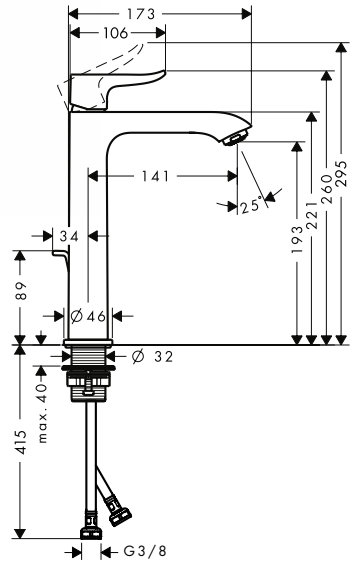

Single lever basin mixer 200 with pop-up waste set

Chrome 31183000 308.30

AirPower EcoSmart Comfort Zone Quick Clean

- consists of: single lever basin mixer, waste set
- ComfortZone 200
- projection 141 mm
- spray type: normal spray
- maximum flow rate at 3 bar: 5 l/min
- ceramic cartridge
- temperature limitation adjustable
- suitable for continuous flow water heaters
- pop-up waste set G 1¼
- material waste set: metal
- connection type: G ⅜ connections
- connection dimension: DN15

Alternative products:

- Single lever basin mixer 200 without waste set — Chrome 31185000 300.70



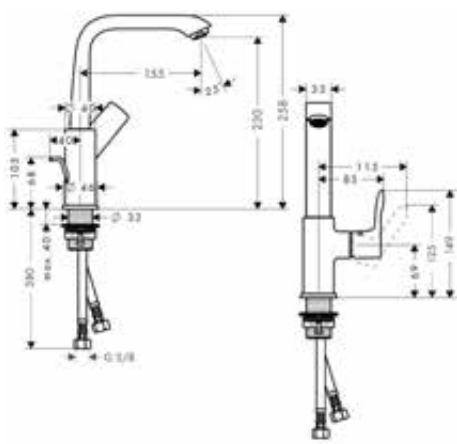

Single lever basin mixer 230 with pop-up waste set

Chrome 31087000 330.10

AirPower EcoSmart Comfort Zone Quick Clean

- consists of: single lever basin mixer, waste set
- ComfortZone 230
- projection 155 mm
- swivel range 120°
- spray type: normal spray
- maximum flow rate at 3 bar: 5 l/min
- ceramic cartridge
- temperature limitation adjustable
- suitable for continuous flow water heaters
- pop-up waste set G 1¼
- material waste set: metal
- connection type: G ⅜ connections
- connection dimension: DN15
- handle position on the side: bottom-side at the base body (not suitable for wash bowls)

Alternative products:

- Single lever basin mixer 230 with push-open waste set — Chrome 31187000 330.10
- Single lever basin mixer 230 without waste set — Chrome 31081000 322.80

Measurements within scale drawings are in mm.

	finish	code no.	Euro



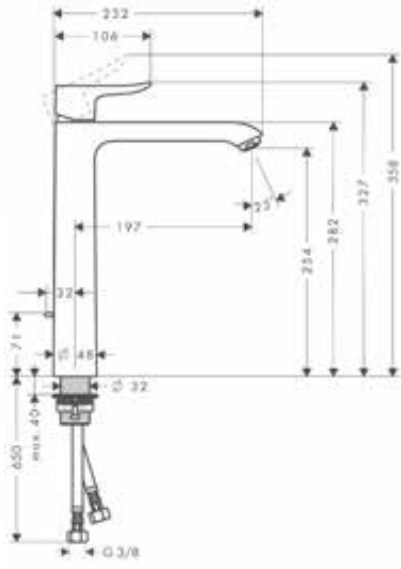

Single lever basin mixer 260 for washbowls with pop-up waste set

Chrome — 31082000 — 337.20

AirPower · EcoSmart · Comfort Zone · Quick Clean

- consists of: single lever basin mixer, waste set
- ComfortZone 260
- projection 197 mm
- spray type: normal spray
- maximum flow rate at 3 bar: 5 l/min
- ceramic cartridge
- temperature limitation adjustable
- suitable for continuous flow water heaters
- pop-up waste set G 1¼
- material waste set: metal
- connection type: G ⅜ connections
- connection dimension: DN15

Alternative products:

- Single lever basin mixer 260 for washbowls without waste set — Chrome — 31184000 — 329.90



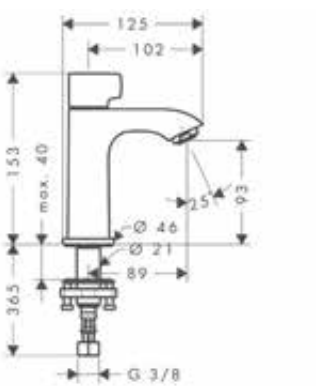

Pillar tap 100 for cold water or pre-adjusted water without waste set

Chrome — 31166000 — 220.20

AirPower · EcoSmart · Comfort Zone · Quick Clean

- ComfortZone 100
- projection 89 mm
- spray type: normal spray
- maximum flow rate at 3 bar: 5 l/min
- ceramic valves 90°
- for cold water connection
- connection type: G ⅜ connection hose
- connection dimension: DN15

Measurements within scale drawings are in mm.

Technical specifications and units of measure are subject to change.

	finish	code no.	Euro



Single lever basin mixer for concealed installation wall-mounted with spout 16,5 cm

Chrome | 31085000 | 315.40

AirPower · EcoSmart · Quick Clean

- consists of: single lever basin mixer for concealed installation wall-mounted, waste set
- projection 165 mm
- spray type: normal spray
- maximum flow rate at 3 bar: 5 l/min
- ceramic cartridge
- temperature limitation adjustable
- non-closing waste set
- material waste set: metal
- connection type: basic set
- connection dimension: DN15
- handle can be positioned on the right or left, depends on the basic set installation

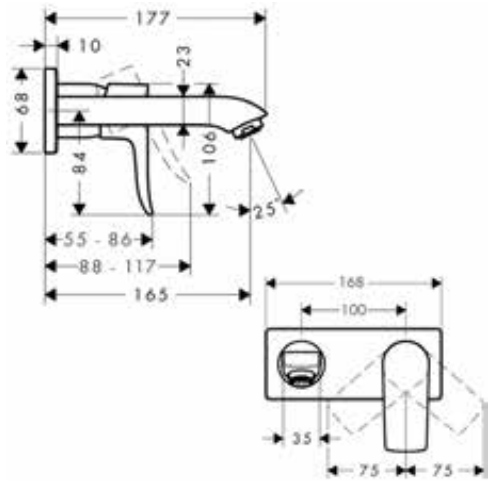

Alternative sizes:

- Single lever basin mixer for concealed installation wall-mounted with spout 22,5 cm — Chrome | 31086000 | 344.60

Alternative products:

- Single lever basin mixer for concealed installation wall-mounted LowFlow 3,5 l/min with spout 16,5 cm — Chrome | 31251000 | 304.00

Required parts:

- Basic set for single lever basin mixer for concealed installation wall-mounted — 13622180 | 220.50



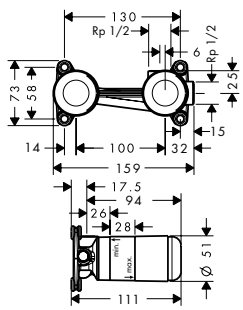

Basic set for single lever basin mixer for concealed installation wall-mounted

13622180 | 220.50

- installation depth: 44 - 72 mm
- variable positioning of the mixer system, can be left or right of the spout
- easy orientation due to support surfaces for the spirit level
- with building protection cover against contamination during assembly
- with dimension indication for exact determination of the installation depth
- with pre-mounted fastening lugs for mounting in drywall and solidwall
- sound-decoupled installation
- connection dimension: DN15

Optional parts:

- Extension set 2.5 cm — 31971000 | 112.80

Measurements within scale drawings are in mm.

Technical specifications and units of measure are subject to change.

Bidet



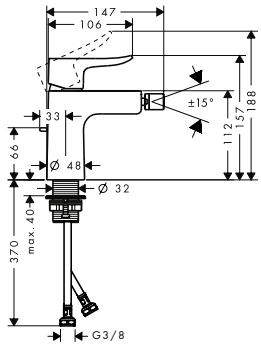

Single lever bidet mixer with pop-up waste set

- consists of: single lever bidet mixer, waste set
- projection 123 mm
- ball-pivot joint
- spray type: laminar spray
- maximum flow rate at 3 bar: 7,5 l/min
- ceramic cartridge
- temperature limitation adjustable
- suitable for continous flow water heaters
- pop-up waste set G 1¼
- material waste set: metal
- connection type: G ⅜ connections
- connection dimension: DN15

finish	code no.	Euro
Chrome	31280000	290.60



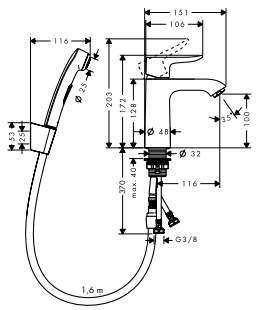

Single lever basin mixer with bidette hand shower and shower hose 160 cm

- consists of: single lever basin mixer, bidette hand shower, shower holder, shower hose, waste set
- ComfortZone 110
- maximum flow rate at 3 bar: 5 l/min
- ceramic cartridge
- temperature limitation adjustable
- suitable for continuous flow water heaters
- push-open waste set G 1¼
- material waste set: metal
- connection type: G ⅜ connections
- connection dimension: DN15

finish	code no.	Euro
Chrome	31285000	311.10

AirPower · EcoSmart · Comfort Zone · Quick Clean

Bath



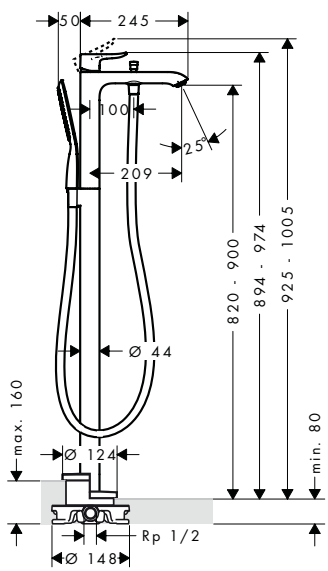

Single lever bath mixer floor-standing

- consists of: single lever bath mixer floor standing, baton hand shower, shower hose, shower holder
- 2 functions
- projection 209 mm
- connection type: basic set
- spray type mixer: normal spray
- spray type hand shower: RainAir
- flow rate for bath spout at 3 bar: 19 l/min
- flow rate of hand shower at 3 bar: 14 l/min
- min. operating pressure: 1 bar
- max. operating pressure: 10 bar
- ceramic cartridge
- temperature limitation adjustable
- diverter with automatic resetting
- non-return valve
- connection dimension: DN15

finish	code no.	Euro
Chrome	31471000	1,716.10

AirPower · Quick Clean

Required parts:

· Basic set for mixers floor-standing	10452180	459.80

Optional parts:

· Sealing foil for basic set bath mixer floor-standing	96441000	127.30

Measurements within scale drawings are in mm.

Technical specifications and units of measure are subject to change.

		finish	code no.	Euro
	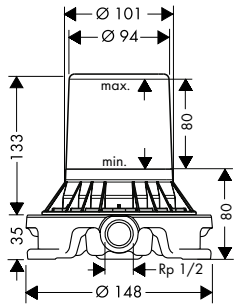			
Basic set for mixers floor-standing · for mounting on unfinished floor · suitable for single lever bath mixer, single lever basin mixer and bath spout floor-standing · connection dimension: DN15			10452180	459.80
Optional parts: · Sealing foil for basic set bath mixer floor-standing			96441000	127.30
	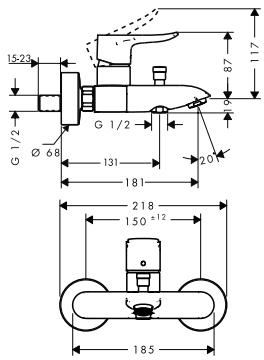			
Single lever bath mixer for exposed installation · 2 functions · projection 123 - 130.5 mm · connection type: s-shaped connections · centre distance: 150 ± 12 mm · spray type mixer: normal spray · flow rate for bath spout at 3 bar: 21 l/min · flow rate of hand shower at 3 bar: 8 l/min · min. operating pressure: 1 bar · max. operating pressure: 10 bar · ceramic cartridge · temperature limitation adjustable · diverter with automatic resetting · protected against backflow, according to DIN EN1717 · with silencer · suitable for continous flow water heaters · connection dimension: DN15		Chrome	31480000	324.30
	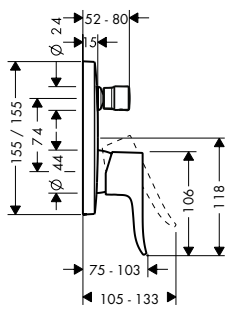			
Single lever bath mixer for concealed installation for iBox universal · 2 functions · connection type: basic set · flow rate upper outlet: 21 l/min · flow rate lower outlet: 29 l/min · min. operating pressure: 1 bar · max. operating pressure: 10 bar · ceramic cartridge · temperature limitation adjustable · diverter with automatic resetting · with silencer		Chrome	31454000	227.20
Alternative products: · Single lever bath mixer for concealed installation with integrated security combination according to EN1717 for iBox universal		Chrome	31451000	352.10
Required parts: · Basic set iBox universal			01800180	137.30
Optional parts: · Extension element		Chrome	15597000	46.70

Measurements within scale drawings are in mm.

	finish	code no.	Euro
 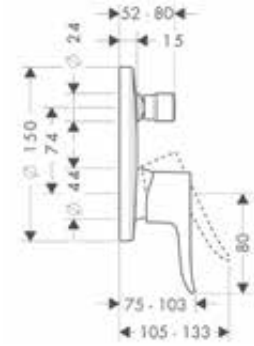			
Single lever bath mixer for concealed installation for iBox universal · 2 functions · connection type: basic set · flow rate upper outlet: 21 l/min · flow rate lower outlet: 29 l/min · min. operating pressure: 1 bar · max. operating pressure: 10 bar · ceramic cartridge · temperature limitation adjustable · diverter with automatic resetting · with silencer	Chrome	31493000	227.20
Alternative products:			
· Single lever bath mixer for concealed installation with integrated security combination according to EN1717 for iBox universal	Chrome	31487000	352.10
Required parts:			
· Basic set iBox universal		01800180	137.30
Optional parts:			
· Extension element 15 cm	Chrome	13597000	47.80
 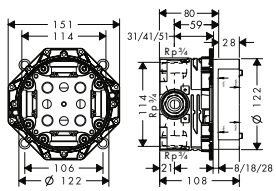			
Basic set iBox universal · suitable for all shower, bath tub and thermostat finish sets for concealed installation · connection thread Rp ¾ · rotationally-symmetric installation · sound-decoupled installation · connection dimension: DN20		01800180	137.30
Alternative products:			
· Basic set iBox universal with shut-off unit		01850180	178.40
Optional parts:			
· Extension iBox universal basic set 2.5 cm		13595000	50.40
· Fastening rail set for iBox universal		96615000	35.80
· Assembly aid for iBox universal		93500000	13.00
 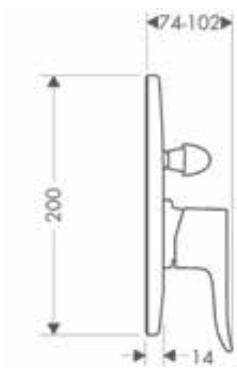			
Single lever bath mixer for concealed installation · 2 functions · connection type: basic set · min. operating pressure: 1 bar · max. operating pressure: 10 bar · ceramic cartridge · temperature limitation adjustable · diverter with automatic resetting	Chrome	31484000	117.30
Required parts:			
· Basic set for single lever bath mixer for concealed installation		31741180	124.50

Measurements within scale drawings are in mm.

Technical specifications and units of measure are subject to change.

	finish	code no.	Euro
 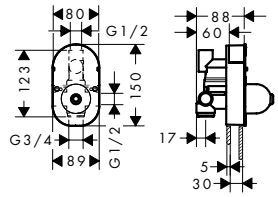	**Basic set for single lever bath mixer for concealed installation** · ceramic cartridge · temperature limitation adjustable · installation depth: 55 - 83 mm · connection dimension: DN15 **Optional parts:** · Extension for basic set for single lever bath mixer for concealed installation		31741180 32498000	124.50 127.30
 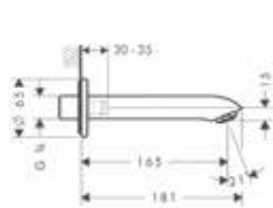	**Bath spout** · 1 function · projection 165 mm · wall-mounted · maximum flow rate at 3 bar: 20 l/min · connection dimension: DN20 · spray type: normal spray	Chrome	31494000	217.80
 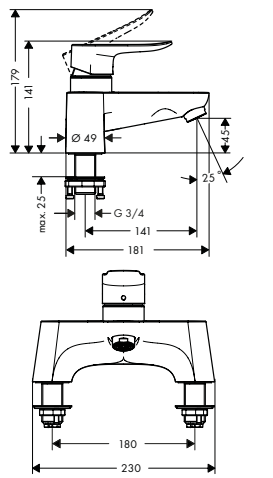	**2-hole rim mounted bath mixer** · 1 function · connection type: G ¾ · centre distance: 180 mm · ceramic cartridge (Highflow) · operating pressure from 0.2 bar · diverter with automatic resetting · non-return valve · with silencer · connection dimension: DN15	Chrome	31423000	324.30
 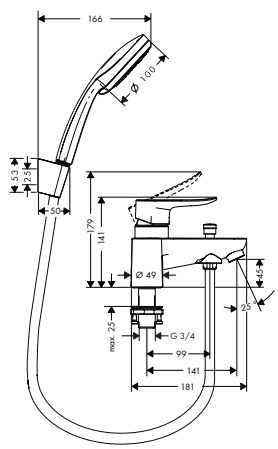	**2-hole rim mounted bath mixer with diverter valve and Croma 100 hand shower Vario** · consists of: 2-hole rim mounted bath mixer, hand shower, shower holder, shower hose · 2 functions · connection type: G ¾ · centre distance: 180 mm · ceramic cartridge (Highflow) · operating pressure from 0.2 bar · diverter with automatic resetting · non-return valve · with silencer · connection dimension: DN15 **Consisting of:** · Hand shower Vario EcoSmart 9 l/min (# 28537000) · Shower holder Porter S (# 28331000) · Shower hose 160 cm (# 28276000)	Chrome	31422000	390.20

Measurements within scale drawings are in mm.

	finish	code no.	Euro



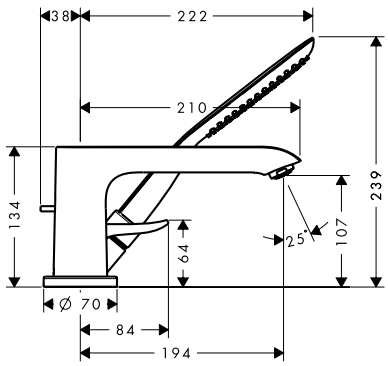

3-hole rim mounted single lever bath mixer

Chrome | 31190000 | 778.10

AirPower | Quick Clean

- consists of: 3-hole rim mounted single lever bath mixer, baton hand shower, shower holder
- 2 functions
- projection 220 mm
- connection type: basic set
- spray type mixer: normal spray
- spray type hand shower: RainAir
- maximum pull-out length of hand shower: 1.10 m
- flow rate for bath spout at 3 bar: 19 l/ min
- flow rate of hand shower at 3 bar: 15 l/ min
- min. operating pressure: 1 bar
- max. operating pressure: 10 bar
- ceramic cartridge
- temperature limitation adjustable
- connection dimension: DN15

Required parts:

- Basic set for 3-hole rim mounted single lever bath mixer — 13437180 — 686.60



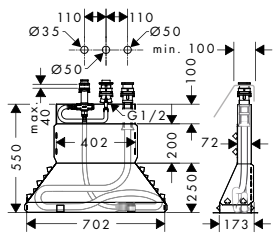

Basic set for 3-hole rim mounted single lever bath mixer

13437180 | 686.60

- consists of: basic set, shower hose, Secubox
- maximum pull-out length of hand shower: 1.10 m
- connection thread: G ½
- connection dimension: DN15

Optional parts:

- Secuflex insert extension — 98806000 — 4.10



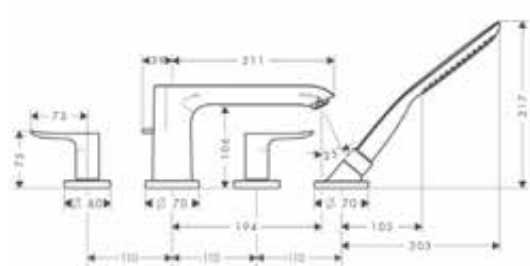

4-hole rim mounted bath mixer

Chrome | 31442000 | 778.10

AirPower | Quick Clean

- consists of: 4-hole rim mounted bath mixer, baton hand shower, shower holder
- 2 functions
- projection 220 mm
- connection type: basic set
- spray type mixer: normal spray
- spray type hand shower: RainAir
- maximum pull-out length of hand shower: 1.10 m
- flow rate for bath spout at 3 bar: 25 l/ min
- flow rate of hand shower at 3 bar: 17 l/ min
- min. operating pressure: 1 bar
- max. operating pressure: 10 bar
- ceramic valves hot/ cold 90°
- connection dimension: DN15

Required parts:

- Basic set for 4-hole rim mounted bath mixer — 13444180 — 838.00

Measurements within scale drawings are in mm.

Technical specifications and units of measure are subject to change.

	finish	code no.	Euro
 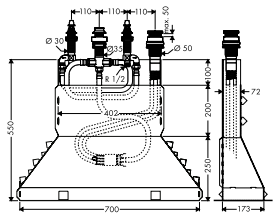	Basic set for 4-hole rim mounted bath mixer · consists of: basic set, shower hose, Secubox · maximum pull-out length of hand shower: 1.10 m · connection dimension: DN15		13444180	838.00
	Optional parts:			
	· Secuflex insert extension		98806000	4.10

Shower

 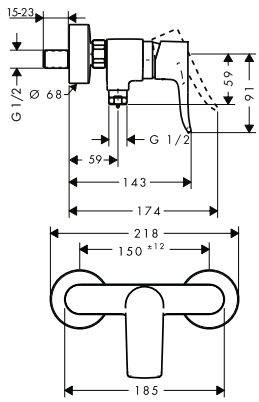	Single lever shower mixer for exposed installation · 1 function · connection type: s-shaped connections · centre distance: 150 ± 12 mm · maximum flow rate at 3 bar: 31 l/min · flow rate of hand shower at 3 bar: 16 l/min · ceramic cartridge · min. operating pressure: 1 bar · max. operating pressure: 10 bar · temperature limitation adjustable · non-return valve · with silencer · hose connection DN15 · connection dimension: DN15	Chrome	31680000	274.30
 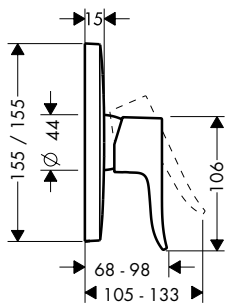	Single lever shower mixer for concealed installation for iBox universal · 1 function · connection type: basic set · maximum flow rate at 3 bar: 29 l/min · ceramic cartridge · min. operating pressure: 1 bar · max. operating pressure: 10 bar · temperature limitation adjustable · with silencer	Chrome	31456000	212.70
	Required parts:			
	· Basic set iBox universal		01800180	137.30
	Optional parts:			
	· Extension element	Chrome	15597000	46.70
 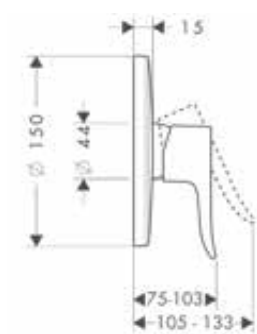	Single lever shower mixer for concealed installation for iBox universal · 1 function · connection type: basic set · maximum flow rate at 3 bar: 29,3 l/min · ceramic cartridge · min. operating pressure: 1 bar · max. operating pressure: 10 bar · temperature limitation adjustable · with silencer	Chrome	31685000	212.70
	Required parts:			
	· Basic set iBox universal		01800180	137.30
	Optional parts:			
	· Extension element 15 cm	Chrome	13597000	47.80

Measurements within scale drawings are in mm.

	finish	code no.	Euro
 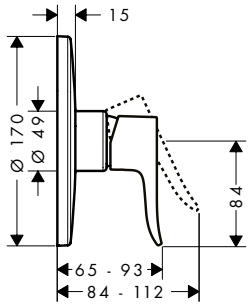			
Single lever shower mixer HighFlow for concealed installation for iBox universal · 1 function · connection type: basic set · maximum flow rate at 3 bar: 47 l/min · ceramic cartridge (Highflow) · temperature limitation adjustable · connection dimension: DN15	Chrome	31652000	212.70
Required parts:			
· Basic set iBox universal with shut-off unit		01850180	178.40
· Basic set iBox universal		01800180	137.30
Optional parts:			
· Basic set for Trio diverter valve for concealed installation		15984180	160.90
 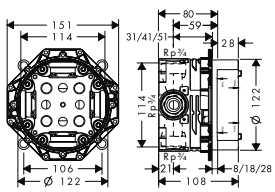			
Basic set iBox universal · suitable for all shower, bath tub and thermostat finish sets for concealed installation · connection thread Rp ¾ · rotationally-symmetric installation · sound-decoupled installation · connection dimension: DN20		01800180	137.30
Alternative products:			
· Basic set iBox universal with shut-off unit		01850180	178.40
Optional parts:			
· Extension iBox universal basic set 2.5 cm		13595000	50.40
· Fastening rail set for iBox universal		96615000	35.80
· Assembly aid for iBox universal		93500000	13.00
 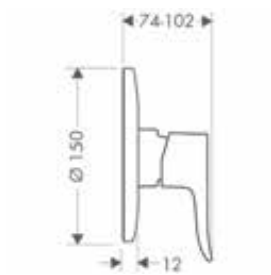			
Single lever shower mixer for concealed installation · 1 function · connection type: basic set · maximum flow rate at 3 bar: 28 l/min · min. operating pressure: 1 bar · max. operating pressure: 10 bar	Chrome	31686000	102.70
Required parts:			
· Basic set for single lever shower mixer for concealed installation		13620180	110.60
 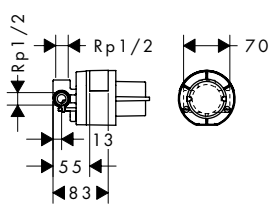			
Basic set for single lever shower mixer for concealed installation · ceramic cartridge · temperature limitation adjustable · installation depth: 55 - 83 mm · connection dimension: DN15		13620180	110.60
Optional parts:			
· Extension set for basic set for single lever shower mixer for concealed installation		32698000	98.10

Measurements within scale drawings are in mm.

Technical specifications and units of measure are subject to change.

Basin

	finish	code no.	Euro
Single lever basin mixer 100 with pop-up waste set	Chrome	31060000	282.60



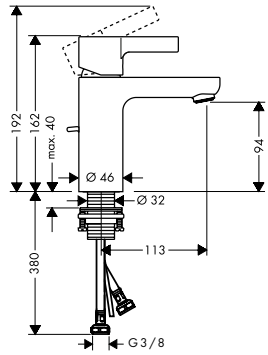

- consists of: single lever basin mixer, waste set
- ComfortZone 100
- projection 113 mm
- spray type: normal spray
- maximum flow rate at 3 bar: 5 l/min
- ceramic cartridge
- temperature limitation adjustable
- suitable for continuous flow water heaters
- pop-up waste set G 1¼
- material waste set: metal
- connection type: G ⅜ connections
- connection dimension: DN15

Alternative products:

· Single lever basin mixer 100 without waste set	Chrome	31068000	269.40
· Single lever basin mixer 100 LowFlow without waste set	Chrome	31015000	261.90
· Single lever basin mixer 100 LowFlow 3.5 l/min with pop-up waste set	Chrome	31063000	272.30
· Single lever basin mixer 100 LowFlow 2 l/min with pop-up waste set	Chrome	31016000	274.50

Single lever basin mixer with swivel spout and pop-up waste set	Chrome	31159000	347.20



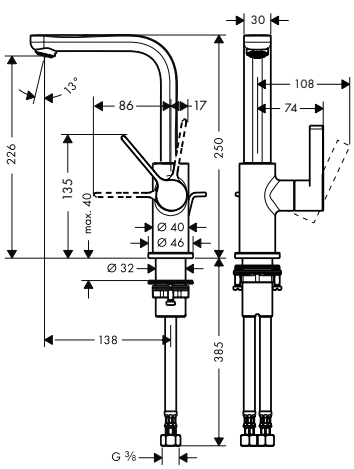

- consists of: single lever basin mixer, waste set
- ComfortZone 230
- projection 138 mm
- swivel range 120°
- spray type: normal spray
- maximum flow rate at 3 bar: 5 l/min
- ceramic cartridge
- temperature limitation adjustable
- suitable for continuous flow water heaters
- pop-up waste set G 1¼
- material waste set: metal
- connection type: G ⅜ connections
- connection dimension: DN15
- handle position on the side: bottom-side at the base body (not suitable for wash bowls)

Alternative products:

· Single lever basin mixer 230 with swivel spout and push-open waste set	Chrome	31161000	347.20

Measurements within scale drawings are in mm.

	finish	code no.	Euro
	Chrome	31022000	369.10

Single lever basin mixer 260 for washbowls with pop-up waste set

AirPower · EcoSmart · Comfort Zone · Quick Clean

- consists of: single lever basin mixer, waste set
- ComfortZone 260
- projection 189 mm
- spray type: normal spray
- maximum flow rate at 3 bar: 5 l/min
- ceramic cartridge
- temperature limitation adjustable
- suitable for continuous flow water heaters
- pop-up waste set G 1¼
- material waste set: metal
- connection type: G ⅜ connections
- connection dimension: DN15

Alternative products:

· Single lever basin mixer 260 for washbowls without waste set	Chrome	31023000	356.00

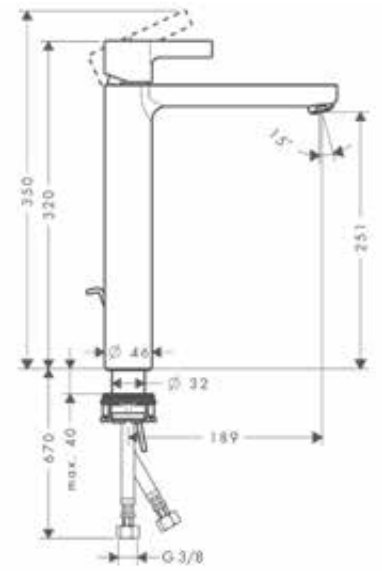

	Chrome	31162000	350.50

Single lever basin mixer for concealed installation wall-mounted with spout 16,5 cm

AirPower · EcoSmart · Quick Clean

- consists of: single lever basin mixer for concealed installation wall-mounted, waste set
- projection 165 mm
- spray type: normal spray
- maximum flow rate at 3 bar: 5 l/min
- ceramic cartridge
- temperature limitation adjustable
- suitable for continuous flow water heaters
- non-closing waste set
- material waste set: metal
- connection type: basic set
- connection dimension: DN15
- handle can be positioned on the right or left, depends on the basic set installation

Alternative sizes:

· Single lever basin mixer for concealed installation wall-mounted with spout 22,5 cm	Chrome	31163000	381.10

Required parts:

· Basic set for single lever basin mixer for concealed installation wall-mounted		13622180	220.50

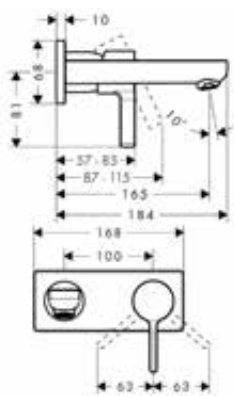

Measurements within scale drawings are in mm.

Technical specifications and units of measure are subject to change.

	finish	code no.	Euro



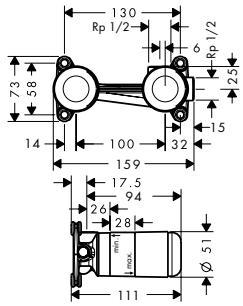

Basic set for single lever basin mixer for concealed installation wall-mounted

- installation depth: 44 - 72 mm
- variable positioning of the mixer system, can be left or right of the spout
- easy orientation due to support surfaces for the spirit level
- with building protection cover against contamination during assembly
- with dimension indication for exact determination of the installation depth
- with pre-mounted fastening lugs for mounting in drywall and solidwall
- sound-decoupled installation
- connection dimension: DN15

		13622180	220.50

Optional parts:

· Extension set 2.5 cm		31971000	112.80



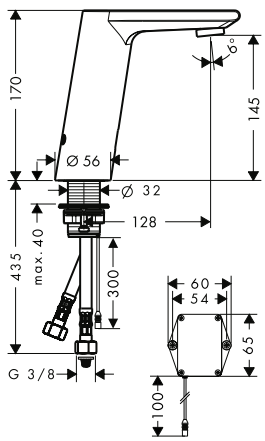

Electronic basin mixer with temperature control battery operation

- ComfortZone 150
- projection 128 mm
- spray type: normal spray
- maximum flow rate at 3 bar: 5 l/min
- temperature limitation adjustable
- temperature adjustable via mixer lever on the side
- non-return valve
- suitable for continous flow water heaters
- infrared sensor technology
- automatic environmental adjustment of infrared sensor
- adjustable optical range of infrared sensor (2 settings)
- battery condition indicator available
- battery operation 6V (lifetime approx. 2 years, battery included in scope of supply)
- flushing time: 10 s
- hygiene rinse activatable (automatic water flow)
- frequency of hygiene rinse: 24 h
- flushing time hygiene rinse: 10 s
- permanent rinse activatable (single water flow for 180 seconds, suitable for thermal disinfection)
- cleaning mode: manual water stop for washbasin cleaning
- connection dimension: DN15
- TÜV certified
- dirt filters in the connection hoses

	Chrome	31100000	737.70

Sensor Activation · AirPower · EcoSmart · Comfort Zone

Alternative products:

· Electronic basin mixer with temperature pre-adjustment battery operation	Chrome	31101000	680.30
· Electronic basin mixer with temperature control mains connection 230 V	Chrome	31102000	781.90
· Electronic basin mixer with temperature pre-adjustment mains connection 230 V	Chrome	31103000	723.00

Measurements within scale drawings are in mm.

Bidet



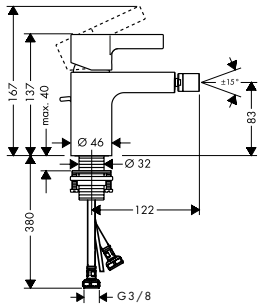

	finish	code no.	Euro
Single lever bidet mixer with pop-up waste set · consists of: single lever bidet mixer, waste set · projection 122 mm · aerator with ball pivot · spray type: laminar spray · maximum flow rate at 3 bar: 7,2 l/min · ceramic cartridge · temperature limitation adjustable · suitable for continous flow water heaters · material waste set: metal · connection type: G ⅜ connections · connection dimension: DN15	Chrome	31261000	282.60



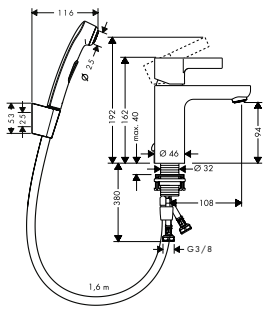

Single lever basin mixer with bidette hand shower and shower hose 160 cm · consists of: single lever basin mixer, bidette hand shower, shower holder, shower hose · ComfortZone 90 · maximum flow rate at 3 bar: 5 l/min · ceramic cartridge · temperature limitation adjustable · suitable for continuous flow water heaters · connection type: G ⅜ connections · connection dimension: DN15	Chrome	31160000	313.90

Bath



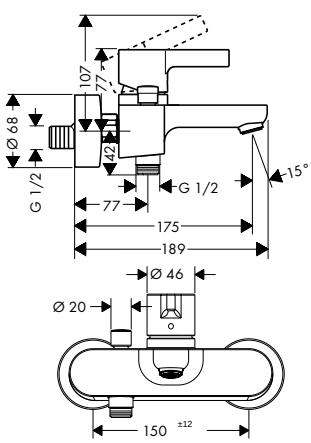

Single lever bath mixer for exposed installation · 2 functions · projection 175 mm · connection type: s-shaped connections · centre distance: 150 ± 12 mm · spray type mixer: normal spray · flow rate for bath spout at 3 bar: 22 l/min · flow rate of hand shower at 3 bar: 16 l/min · min. operating pressure: 1 bar · max. operating pressure: 10 bar · ceramic cartridge · temperature limitation adjustable · diverter with automatic resetting · non-return valve · with silencer · connection dimension: DN15	Chrome	31460000	368.50

Measurements within scale drawings are in mm.

Technical specifications and units of measure are subject to change.

	finish	code no.	Euro
 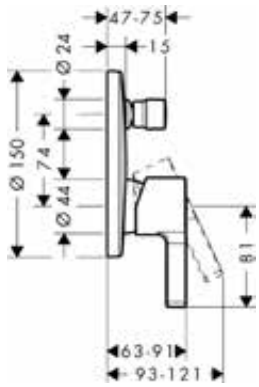			
Single lever bath mixer for concealed installation for iBox universal · 2 functions · connection type: basic set · flow rate upper outlet: 21 l/min · flow rate lower outlet: 29 l/min · min. operating pressure: 1 bar · max. operating pressure: 10 bar · ceramic cartridge · temperature limitation adjustable · diverter with automatic resetting · with silencer	Chrome	31465000	253.60
Alternative products:			
· Single lever bath mixer for concealed installation with integrated security combination according to EN1717 for iBox universal	Chrome	31466000	402.80
Required parts:			
· Basic set iBox universal		01800180	137.30
Optional parts:			
· Extension element 15 cm	Chrome	13597000	47.80
 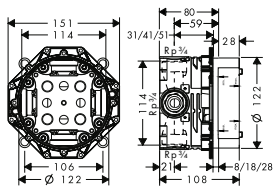			
Basic set iBox universal · suitable for all shower, bath tub and thermostat finish sets for concealed installation · connection thread Rp ¾ · rotationally-symmetric installation · sound-decoupled installation · connection dimension: DN20		01800180	137.30
Alternative products:			
· Basic set iBox universal with shut-off unit		01850180	178.40
Optional parts:			
· Extension iBox universal basic set 2.5 cm		13595000	50.40
· Fastening rail set for iBox universal		96615000	35.80
· Assembly aid for iBox universal		93500000	13.00
 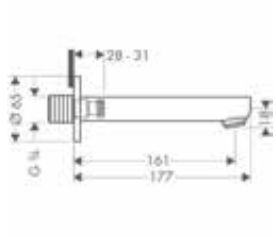			
Bath spout · 1 function · connection type: G ¾ · projection 161 mm · wall-mounted · maximum flow rate at 3 bar: 21 l/min · spray type: normal spray	Chrome	14420000	185.90

Measurements within scale drawings are in mm.

	finish	code no.	Euro



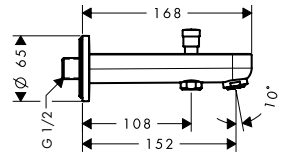

Bath spout 15.2 cm with diverter valve

Chrome 31417000 180.30

AirPower Quick Clean

- 2 functions
- connection type: G ½
- with automatic resetting
- with escutcheon
- projection 152 mm
- wall-mounted
- maximum flow rate at 3 bar: 19 l/min
- connection dimension: DN15
- protected against backflow, according to DIN EN1717

Alternative sizes:

- Bath spout 22.8 cm with diverter valve — Chrome — 31416000 — 194.10



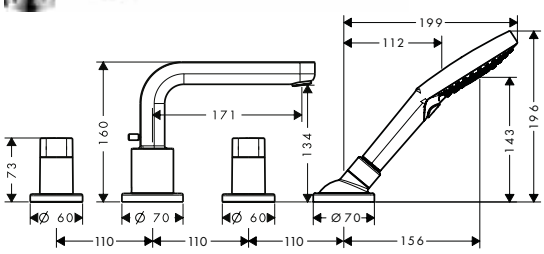

4-hole rim mounted bath mixer with spout 17.1 cm

Chrome 31446000 773.10

AirPower Quick Clean

- consists of: 4-hole rim mounted bath mixer, hand shower, shower holder
- 2 functions
- projection 171 mm
- connection type: basic set
- spray type mixer: normal spray
- spray type hand shower: Rain, RainAir, Whirl
- maximum pull-out length of hand shower: 1.10 m
- maximum flow rate at 3 bar: 22 l/min
- min. operating pressure: 1 bar
- max. operating pressure: 10 bar
- ceramic valves hot/ cold 90°
- connection dimension: DN15

Consisting of:

- Hand shower 120 3jet (# 26530000)

Alternative sizes:

- 4-hole rim mounted bath mixer with spout 22 cm — Chrome — 31447000 — 773.10

Required parts:

- Basic set for 4-hole rim mounted bath mixer — 13444180 — 838.00



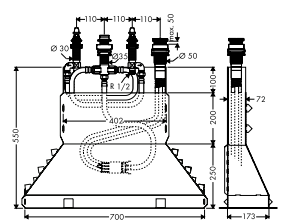

Basic set for 4-hole rim mounted bath mixer

13444180 838.00

- consists of: basic set, shower hose, Secubox
- maximum pull-out length of hand shower: 1.10 m
- connection dimension: DN15

Optional parts:

- Secuflex insert extension — 98806000 — 4.10

Measurements within scale drawings are in mm.

Technical specifications and units of measure are subject to change.

	finish	code no.	Euro



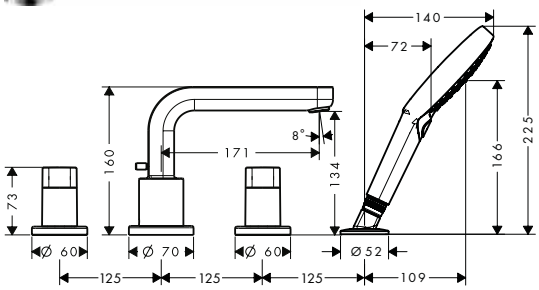

4-hole rim mounted bath mixer

Chrome | 31443000 | 605.30

AirPower | Quick Clean

- consists of: 4-hole rim mounted bath mixer, hand shower, shower holder
- 2 functions
- connection type: basic set
- maximum pull-out length of hand shower: 1.60 m
- maximum flow rate at 3 bar: 22 l/ min
- min. operating pressure: 1 bar
- max. operating pressure: 10 bar
- ceramic valves hot/ cold 90°
- non-return valve
- protected against backflow, according to DIN EN1717
- connection dimension: DN15

Consisting of:

- Hand shower 120 3jet (# 26530000)

Required parts:

- Basic set for 4-hole rim mounted bath mixer — 13244180 | 289.00



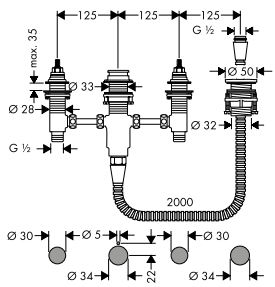

Basic set for 4-hole rim mounted bath mixer

13244180 | 289.00

- consists of: basic set, shower holder, shower hose
- maximum pull-out length of hand shower: 1.60 m
- maintenance opening required
- suitable for 4-hole rim mounted bath mixer
- connection thread: G ½
- connection dimension: DN15
- ceramic valves hot/ cold 90°

Shower



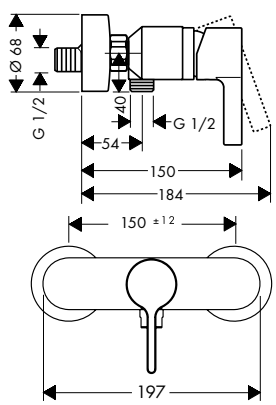

Single lever shower mixer for exposed installation

Chrome | 31660000 | 282.60

- 1 function
- connection type: s-shaped connections
- centre distance: 150 ± 12 mm
- maximum flow rate at 3 bar: 31 l/ min
- flow rate of hand shower at 3 bar: 12 l/ min
- ceramic cartridge
- min. operating pressure: 1 bar
- max. operating pressure: 10 bar
- temperature limitation adjustable
- non-return valve
- with silencer
- hose connection DN15
- connection dimension: DN15



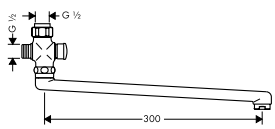

Long swivel spout 30 cm

Chrome | 14495000 | 101.40

- with automatic resetting
- length 300 mm
- for installation on single lever shower mixer
- connection dimension DN15

Measurements within scale drawings are in mm.

Technical specifications and units of measure are subject to change.

	finish	code no.	Euro
 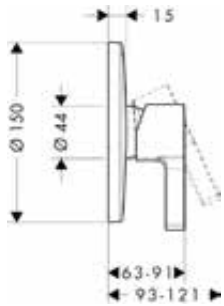			
Single lever shower mixer for concealed installation for iBox universal · 1 function · connection type: basic set · maximum flow rate at 3 bar: 29,3 l/min · ceramic cartridge · min. operating pressure: 1 bar · max. operating pressure: 10 bar · temperature limitation adjustable	Chrome	31665000	230.00
Required parts:			
· Basic set iBox universal		01800180	137.30
Optional parts:			
· Extension element 15 cm	Chrome	13597000	47.80
 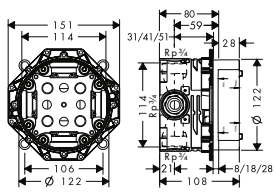			
Basic set iBox universal · suitable for all shower, bath tub and thermostat finish sets for concealed installation · connection thread Rp ¾ · rotationally-symmetric installation · sound-decoupled installation · connection dimension: DN20		01800180	137.30
Alternative products:			
· Basic set iBox universal with shut-off unit		01850180	178.40
Optional parts:			
· Extension iBox universal basic set 2.5 cm		13595000	50.40
· Fastening rail set for iBox universal		96615000	35.80
· Assembly aid for iBox universal		93500000	13.00

Measurements within scale drawings are in mm.

Technical specifications and units of measure are subject to change.

Finoris®



Basin	page 402		Bidet	page 406	
Bath	page 406		Shower	page 409	

Basin

	finish	code no.	Euro
Single lever basin mixer 100 with push-open waste set	Chrome	76010000	171.00
	Matt Black	76010670	239.40
	Matt White	76010700	239.40

NEW



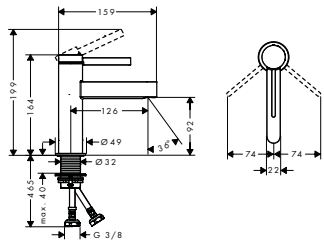

- consists of: single lever basin mixer, waste set
- ComfortZone 100
- projection 126 mm
- spray type: laminar spray
- maximum flow rate at 3 bar: 5 l/min
- ceramic cartridge
- temperature limitation adjustable
- suitable for continuous flow water heaters
- push-open waste set G 1¼
- material waste set: metal
- connection type: G ⅜ connections
- connection dimension: DN15

Single lever basin mixer 110 with pop-up waste set	Chrome	76020000	190.00
	Matt Black	76020670	266.00
	Matt White	76020700	266.00

NEW

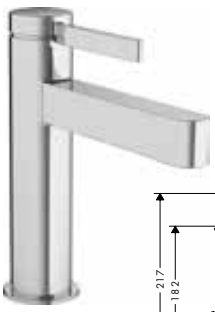

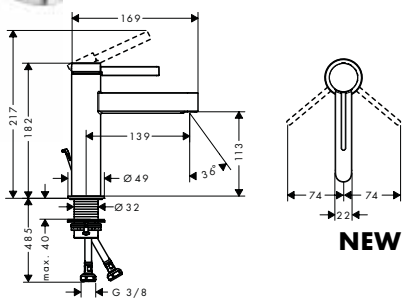

- consists of: single lever basin mixer, waste set
- ComfortZone 110
- projection 139 mm
- spray type: laminar spray
- maximum flow rate at 3 bar: 5 l/min
- ceramic cartridge
- temperature limitation adjustable
- suitable for continuous flow water heaters
- pop-up waste set G 1¼
- material waste set: metal
- connection type: G ⅜ connections
- connection dimension: DN15

Alternative products:

NEW Single lever basin mixer 110 with push-open waste set	Chrome	76023000	195.00
	Matt Black	76023670	273.00
	Matt White	76023700	273.00
NEW Single lever basin mixer 110 CoolStart with push-open waste set	Chrome	76024000	200.00
	Matt Black	76024670	280.00
	Matt White	76024700	280.00

Single lever basin mixer 110 with bidette hand shower and shower hose 160 cm	Chrome	76210000	260.00
	Matt Black	76210670	364.00

NEW



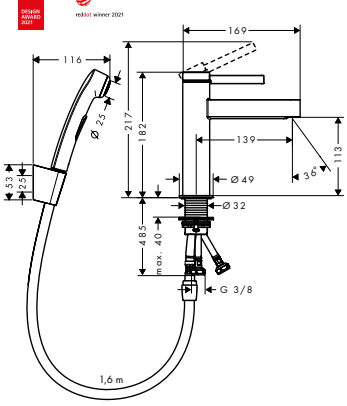

- consists of: single lever basin mixer, bidette hand shower, shower holder, shower hose, waste set
- ComfortZone 110
- projection 139 mm
- spray type: laminar spray
- maximum flow rate at 3 bar: 5 l/min
- ceramic cartridge
- temperature limitation adjustable
- suitable for continuous flow water heaters
- push-open waste set G 1¼
- material waste set: metal
- connection type: G ⅜ connections
- connection dimension: DN15

Measurements within scale drawings are in mm.

Technical specifications and units of measure are subject to change.

	finish	code no.	Euro
NEW			

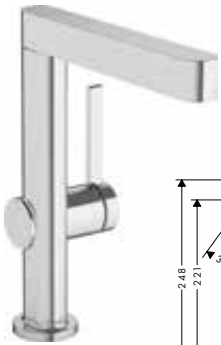

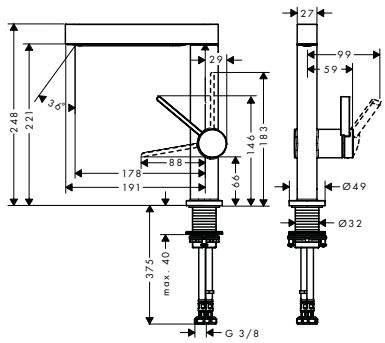

Single lever basin mixer 230 with swivel spout and push-open waste set

- consists of: single lever basin mixer, waste set
- ComfortZone 230
- projection 178 mm
- swivel range 120°
- spray type: laminar spray
- maximum flow rate at 3 bar: 5 l/min
- ceramic cartridge
- temperature limitation adjustable
- suitable for continuous flow water heaters
- push-open waste set G 1¼
- material waste set: metal
- connection type: G ⅜ connections
- connection dimension: DN15

Chrome	76060000	265.00
Matt Black	76060670	371.00
Matt White	76060700	371.00

EcoSmart · Comfort Zone

NEW		

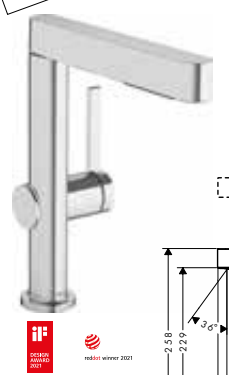

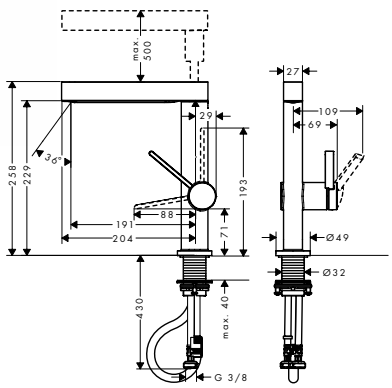

Single lever basin mixer 230 with pull-out spray, 2jet and push-open waste set

- consists of: single lever basin mixer, waste set
- ComfortZone 230
- projection 191 mm
- spray type: laminar spray, PowderRain
- spray returns through pressing spray diverter and spray returns automatically through handle closing
- extension length: 50 cm
- spray disc surface: graphite
- maximum flow rate at 3 bar: 5 l/min
- ceramic cartridge
- temperature limitation adjustable
- push-open waste set G 1¼
- material waste set: metal
- connection type: G ⅜ connections
- connection dimension: DN15
- non-return valve

Chrome	76063000	315.00
Matt Black	76063670	441.00
Matt White	76063700	441.00

EcoSmart · Comfort Zone · Quick Clean · Pull-out Faucet

NEW		

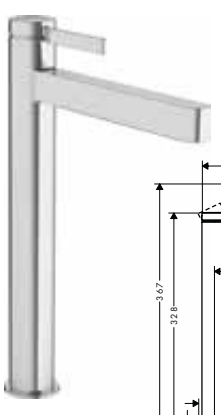

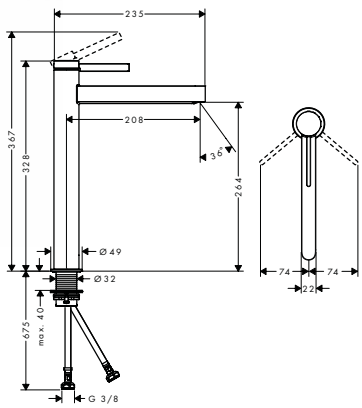

Single lever basin mixer 260 for washbowls with push-open waste set

- consists of: single lever basin mixer, waste set
- ComfortZone 260
- projection 208 mm
- spray type: laminar spray
- maximum flow rate at 3 bar: 5 l/min
- ceramic cartridge
- temperature limitation adjustable
- suitable for continuous flow water heaters
- push-open waste set G 1¼
- material waste set: metal
- connection type: G ⅜ connections
- connection dimension: DN15

Chrome	76070000	280.00
Matt Black	76070670	392.00
Matt White	76070700	392.00

EcoSmart · Comfort Zone

Measurements within scale drawings are in mm.

Technical specifications and units of measure are subject to change.

	finish	code no.	Euro
Single lever basin mixer 260 with bidette hand shower and shower hose 160 cm	Chrome	76220000	360.00
	Matt Black	76220670	504.00

NEW



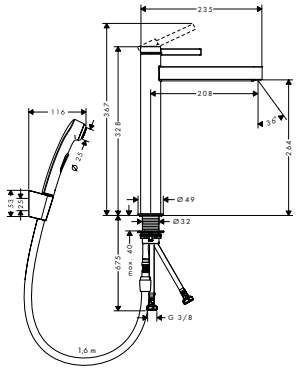

- consists of: single lever basin mixer, bidette hand shower, shower holder, shower hose, waste set
- ComfortZone 260
- projection 208 mm
- spray type: laminar spray
- maximum flow rate at 3 bar: 5 l/min
- ceramic cartridge
- temperature limitation adjustable
- suitable for continuous flow water heaters
- push-open waste set G 1¼
- material waste set: metal
- connection type: G ⅜ connections
- connection dimension: DN15

Pillar tap 100 for cold water or pre-adjusted water without waste set	Chrome	76013000	156.00
	Matt Black	76013670	218.40
	Matt White	76013700	218.40

NEW



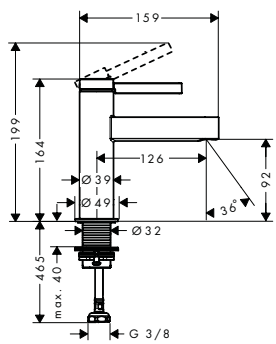

- ComfortZone 100
- projection 126 mm
- spray type: laminar spray
- maximum flow rate at 3 bar: 5 l/min
- ceramic cartridge
- for cold water connection
- connection type: G ⅜ connection hose
- connection dimension: DN15

3-hole basin mixer 110 with push-open waste set	Chrome	76033000	277.50
	Matt Black	76033670	388.50
	Matt White	76033700	388.50

NEW



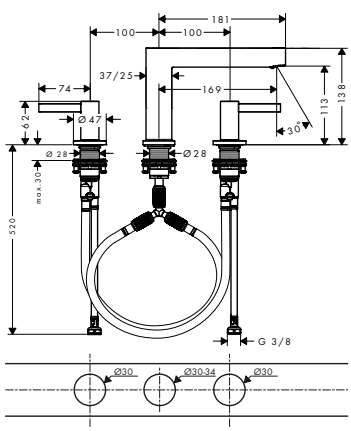

- consists of: 3-hole basin mixer, waste set
- ComfortZone 110
- projection 169 mm
- spray type: laminar spray
- maximum flow rate at 3 bar: 5 l/min
- ceramic valves hot/ cold 90°
- suitable for continuous flow water heaters
- push-open waste set G 1¼
- material waste set: metal
- connection type: G ⅜ connection hose
- connection dimension: DN15

Measurements within scale drawings are in mm.

Technical specifications and units of measure are subject to change.

	finish	code no.	Euro

NEW



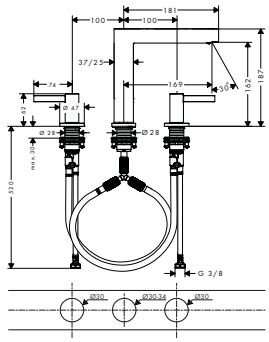

3-hole basin mixer 160 with push-open waste set

Chrome	76034000	290.00
Matt Black	76034670	406.00
Matt White	76034700	406.00

EcoSmart | Comfort Zone

- consists of: 3-hole basin mixer, waste set
- ComfortZone 160
- projection 169 mm
- spray type: laminar spray
- maximum flow rate at 3 bar: 5 l/ min
- ceramic valves hot/ cold 90°
- suitable for continuous flow water heaters
- push-open waste set G 1¼
- material waste set: metal
- connection type: G ⅜ connection hose
- connection dimension: DN15

NEW



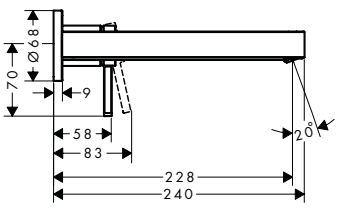

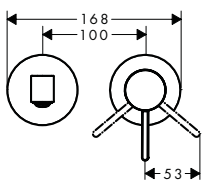

Single lever basin mixer for concealed installation wall-mounted with spout 22,8 cm

Chrome	76050000	266.00
Matt Black	76050670	372.40
Matt White	76050700	372.40

EcoSmart

- consists of: single lever basin mixer for concealed installation wall-mounted, waste set
- projection 228 mm
- spray type: laminar spray
- maximum flow rate at 3 bar: 5 l/ min
- ceramic cartridge
- suitable for continuous flow water heaters
- non-closing waste set
- material waste set: metal
- connection type: basic set
- connection dimension: DN15
- handle can be positioned on the right or left, depends on the basic set installation

Alternative sizes:

NEW

- Single lever basin mixer for concealed installation wall-mounted with spout 16,8 cm

Chrome	76051000	239.40
Matt Black	76051670	335.20
Matt White	76051700	335.20

Required parts:

- Basic set for single lever basin mixer for concealed installation wall-mounted

13622180 220.50



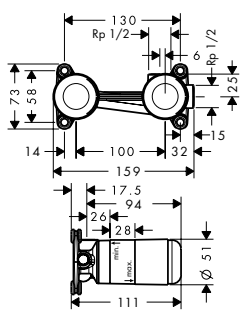

Basic set for single lever basin mixer for concealed installation wall-mounted

13622180 220.50

- installation depth: 44 - 72 mm
- variable positioning of the mixer system, can be left or right of the spout
- easy orientation due to support surfaces for the spirit level
- with building protection cover against contamination during assembly
- with dimension indication for exact determination of the installation depth
- with pre-mounted fastening lugs for mounting in drywall and solidwall
- sound-decoupled installation
- connection dimension: DN15

Optional parts:

- Extension set 2.5 cm — 31971000 — 112.80

Measurements within scale drawings are in mm.

Technical specifications and units of measure are subject to change.

Bidet

NEW



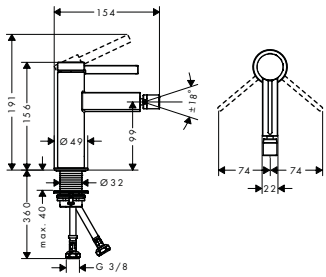

	finish	code no.	Euro
Single lever bidet mixer with push-open waste set	Chrome	76200000	228.00
	Matt Black	76200670	319.20
	Matt White	76200700	319.20

- consists of: single lever bidet mixer, waste set
- projection 129 mm
- ball-pivot joint
- spray type: laminar spray
- maximum flow rate at 3 bar: 7,5 l/min
- ceramic cartridge
- suitable for continous flow water heaters
- push-open waste set G 1¼
- material waste set: metal
- connection type: G ⅜ connections
- connection dimension: DN15

Bath

NEW



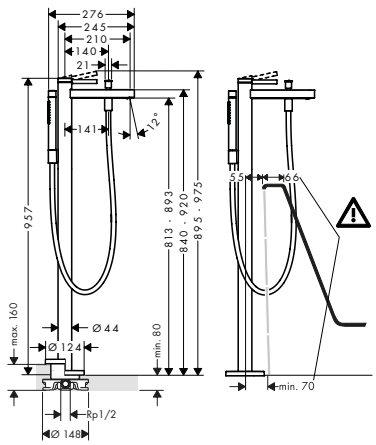

	finish	code no.	Euro
Single lever bath mixer floor-standing	Chrome	76445000	1,500.00
	Matt Black	76445670	2,100.00
	Matt White	76445700	2,100.00

AirPower

- consists of: single lever bath mixer floor standing, baton hand shower, shower hose, shower holder
- 2 functions
- projection 210 mm
- connection type: basic set
- spray type mixer: normal spray
- spray type hand shower: Rain, Mono
- maximum flow rate at 3 bar: 20,6 l/min
- flow rate for bath spout at 3 bar: 20,6 l/min
- flow rate of hand shower at 3 bar: 13,6 l/min
- min. operating pressure: 1 bar
- max. operating pressure: 10 bar
- ceramic cartridge
- diverter with automatic resetting
- non-return valve
- connection dimension: DN15

Consisting of:
- Shower hose 125 cm (# 28272XXX)

Required parts:

· Basic set for mixers floor-standing	10452180	459.80

Optional parts:

· Sealing foil for basic set bath mixer floor-standing	96441000	127.30



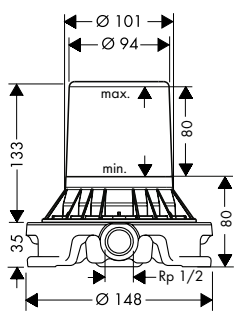

Basic set for mixers floor-standing		10452180	459.80

- for mounting on unfinished floor
- suitable for single lever bath mixer, single lever basin mixer and bath spout floor-standing
- connection dimension: DN15

Optional parts:

· Sealing foil for basic set bath mixer floor-standing	96441000	127.30

Measurements within scale drawings are in mm.

Technical specifications and units of measure are subject to change.

	finish	code no.	Euro

NEW



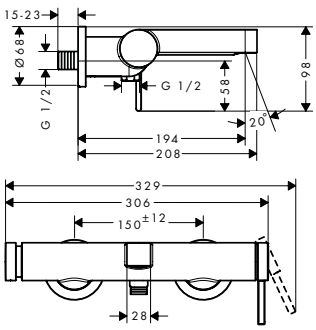

Single lever bath mixer for exposed installation

- 2 functions
- projection 194 mm
- connection type: s-shaped connections
- centre distance: 150 ± 12 mm
- spray type mixer: normal spray
- maximum flow rate at 3 bar: 19 l/min
- flow rate for bath spout at 3 bar: 19 l/min
- flow rate of hand shower at 3 bar: 14,7 l/min
- min. operating pressure: 1 bar
- max. operating pressure: 10 bar
- ceramic cartridge
- pressure diverter Select with automatic resetting
- protected against backflow, according to DIN EN1717
- with silencer
- suitable for continous flow water heaters
- connection dimension: DN15

Chrome	76420000	260.00
Matt Black	76420670	364.00
Matt White	76420700	364.00

Select AirPower

NEW



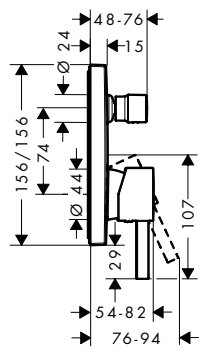

NEW

Single lever bath mixer for concealed installation for iBox universal

- 2 functions
- connection type: basic set
- flow rate upper outlet: 21 l/min
- flow rate lower outlet: 29 l/min
- maximum flow rate at 3 bar: 29 l/min
- min. operating pressure: 1 bar
- max. operating pressure: 10 bar
- ceramic cartridge
- temperature limitation adjustable
- diverter with automatic resetting
- with silencer

Chrome	76415000	185.00
Matt Black	76415670	259.00
Matt White	76415700	259.00

Alternative products:

- Single lever bath mixer for concealed installation with integrated security combination according to EN1717 for iBox universal

Chrome	76416000	285.00
Matt Black	76416670	399.00
Matt White	76416700	399.00

Required parts:

- Basic set iBox universal — 01800180 — 137.30

Optional parts:

- Extension element

Chrome	13593000	46.80
Matt Black	13593670	65.50
Matt White	13593700	65.50



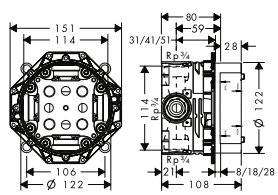

Basic set iBox universal

- suitable for all shower, bath tub and thermostat finish sets for concealed installation
- connection thread Rp ¾
- rotationally-symmetric installation
- sound-decoupled installation
- connection dimension: DN20

01800180 — 137.30

Alternative products:

- Basic set iBox universal with shut-off unit — 01850180 — 178.40

Optional parts:

Extension iBox universal basic set 2.5 cm	13595000	50.40
Fastening rail set for iBox universal	96615000	35.80
Assembly aid for iBox universal	93500000	13.00

Measurements within scale drawings are in mm.

Technical specifications and units of measure are subject to change.

	finish	code no.	Euro

NEW



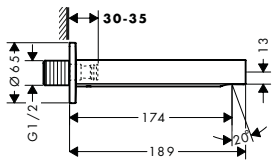

Bath spout

- 1 function
- connection type: G ½
- with escutcheon
- projection 174 mm
- wall-mounted
- maximum flow rate at 3 bar: 20,3 l/ min
- spray type: normal spray

Chrome	76410000	160.00
Matt Black	76410670	224.00
Matt White	76410700	224.00

AirPower

Optional parts:
- Connecting thread G ¾ — 92504000 — 44.90

NEW



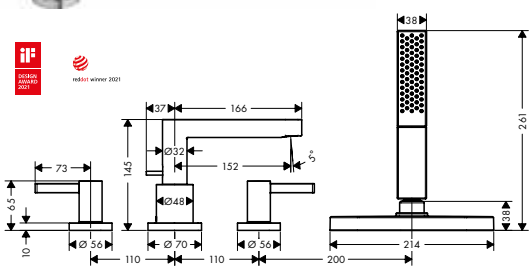

4-hole rim mounted bath mixer with sBox

- consists of: 4-hole rim mounted bath mixer, hand shower, shower holder, shower hose, hose box
- 2 functions
- projection 152 mm
- connection type: basic set
- spray type mixer: normal spray
- spray type hand shower: PowderRain
- maximum pull-out length of hand shower: 1.45 m
- sBox for quiet, smooth and protected hose guidance
- maximum flow rate at 3 bar: 23,5 l/ min
- flow rate for bath spout at 3 bar: 23,5 l/ min
- flow rate of hand shower at 3 bar: 10,2 l/ min
- min. operating pressure: 1 bar
- max. operating pressure: 10 bar
- ceramic valves hot/ cold 90°
- non-return valve
- connection dimension: DN15

Chrome	76444000	690.00
Matt Black	76444670	966.00
Matt White	76444700	966.00

AirPower

Consisting of:
- Baton hand shower 100 1jet (# 26866XXX)
- Finish set oval (# 28020XXX)

Required parts:

NEW
- Basic set for 4-hole rim mounted bath mixer — 13440180 — 425.00

NEW



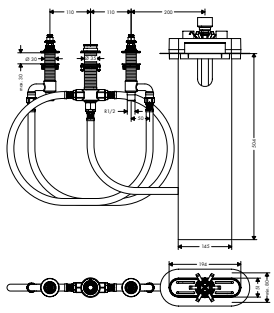

Basic set for 4-hole rim mounted bath mixer — 13440180 — 425.00

- clamping range: 0 - 30 mm
- connection thread: G ½
- connection dimension: DN15
- bath rim width at least 100 mm

Measurements within scale drawings are in mm.

Technical specifications and units of measure are subject to change.

Shower

	finish	code no.	Euro
Single lever shower mixer for exposed installation			
	Chrome	76620000	210.00
	Matt Black	76620670	294.00
	Matt White	76620700	294.00

NEW



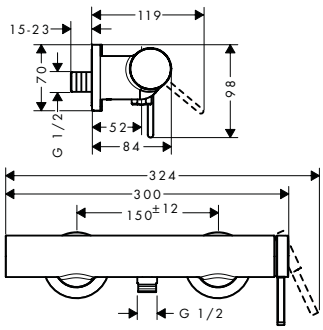

- 1 function
- connection type: s-shaped connections
- centre distance: 150 ± 12 mm
- maximum flow rate at 3 bar: 12,1 l/min
- flow rate of hand shower at 3 bar: 12,1 l/min
- ceramic cartridge
- min. operating pressure: 1 bar
- max. operating pressure: 10 bar
- non-return valve
- with silencer
- hose connection DN15
- connection dimension: DN15

Single lever shower mixer for concealed installation for iBox universal			
	Chrome	76615000	165.00
	Matt Black	76615670	231.00
	Matt White	76615700	231.00

NEW



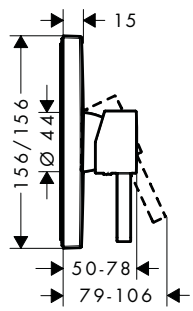

- 1 function
- connection type: basic set
- maximum flow rate at 3 bar: 29,3 l/min
- ceramic cartridge
- min. operating pressure: 1 bar
- max. operating pressure: 10 bar
- temperature limitation adjustable
- with silencer

Required parts:

· Basic set iBox universal		01800180	137.30

Optional parts:

· Extension element	Chrome	13593000	46.80
	Matt Black	13593670	65.50
	Matt White	13593700	65.50

Basic set iBox universal		01800180	137.30



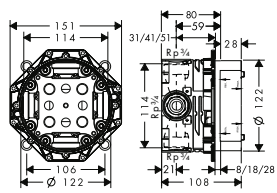

- suitable for all shower, bath tub and thermostat finish sets for concealed installation
- connection thread Rp ¾
- rotationally-symmetric installation
- sound-decoupled installation
- connection dimension: DN20

Alternative products:

· Basic set iBox universal with shut-off unit		01850180	178.40

Optional parts:

· Extension iBox universal basic set 2.5 cm		13595000	50.40
· Fastening rail set for iBox universal		96615000	35.80
· Assembly aid for iBox universal		93500000	13.00

Measurements within scale drawings are in mm.

Technical specifications and units of measure are subject to change.

Vivenis®



Basin page 412 

Bidet page 415 

Bath page 416 

Shower page 418 

Basin

	finish	code no.	Euro

NEW



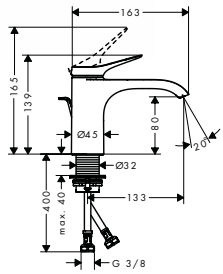

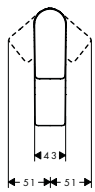

Single lever basin mixer 80 with pop-up waste set

- consists of: single lever basin mixer, waste set
- ComfortZone 80
- projection 133 mm
- spray type: WaterfallStream
- maximum flow rate at 3 bar: 5 l/min
- ceramic cartridge
- temperature limitation adjustable
- suitable for continuous flow water heaters
- pop-up waste set G 1¼
- material waste set: metal
- connection type: G ⅜ connections
- connection dimension: DN15

	finish	code no.	Euro
	Chrome	75010000	145.00
	Matt Black	75010670	203.00
	Matt White	75010700	203.00

Alternative products:

	finish	code no.	Euro
NEW · Single lever basin mixer 80 without waste set	Chrome	75012000	138.00
	Matt Black	75012670	193.20
	Matt White	75012700	193.20

NEW



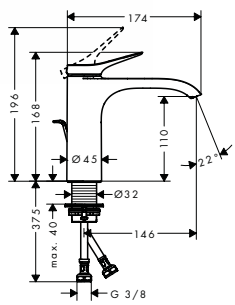

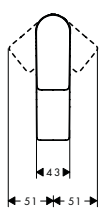

Single lever basin mixer 110 with pop-up waste set

- consists of: single lever basin mixer, waste set
- ComfortZone 110
- projection 146 mm
- spray type: WaterfallStream
- maximum flow rate at 3 bar: 5 l/min
- ceramic cartridge
- temperature limitation adjustable
- suitable for continuous flow water heaters
- pop-up waste set G 1¼
- material waste set: metal
- connection type: G ⅜ connections
- connection dimension: DN15

	finish	code no.	Euro
	Chrome	75020000	165.00
	Matt Black	75020670	231.00
	Matt White	75020700	231.00

Alternative products:

	finish	code no.	Euro
NEW · Single lever basin mixer 110 without waste set	Chrome	75022000	158.00
	Matt Black	75022670	221.20
	Matt White	75022700	221.20
NEW · Single lever basin mixer 110 CoolStart with pop-up waste set	Chrome	75023000	165.00
	Matt Black	75023670	231.00
	Matt White	75023700	231.00
NEW · Single lever basin mixer 110 CoolStart without waste set	Chrome	75024000	158.00
	Matt Black	75024670	221.20
	Matt White	75024700	221.20

NEW



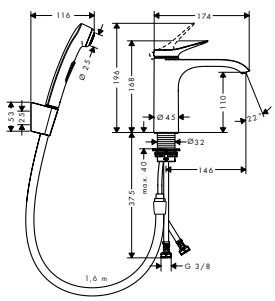

Single lever basin mixer with bidette hand shower and shower hose 160 cm

- consists of: single lever basin mixer, bidette hand shower, shower holder, shower hose, waste set
- ComfortZone 110
- projection 146 mm
- spray type: WaterfallStream
- ceramic cartridge
- temperature limitation adjustable
- suitable for continuous flow water heaters
- push-open waste set G 1¼
- connection type: G ⅜ connections
- connection dimension: DN15

	finish	code no.	Euro
	Chrome	75210000	247.50

Measurements within scale drawings are in mm.

Technical specifications and units of measure are subject to change.

	finish	code no.	Euro

NEW



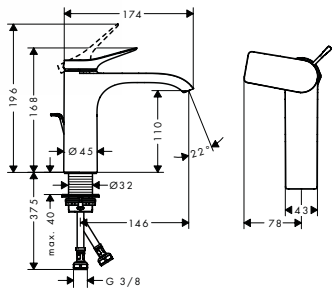

Single lever basin mixer 110 CoolStart with pop-up waste set

- consists of: single lever basin mixer, waste set
- ComfortZone 110
- projection 146 mm
- spray type: WaterfallStream
- maximum flow rate at 3 bar: 5 l/min
- ceramic cartridge
- temperature limitation adjustable
- suitable for continuous flow water heaters
- pop-up waste set G 1¼
- material waste set: metal
- connection type: G ⅜ connections
- connection dimension: DN15
- cold water in middle position

	Chrome	75023000	165.00
	Matt Black	75023670	231.00
	Matt White	75023700	231.00

AirPower · EcoSmart · Comfort Zone · CoolStart

Alternative products:

NEW
- Single lever basin mixer 110 CoolStart without waste set

Chrome	75024000	158.00
Matt Black	75024670	221.20
Matt White	75024700	221.20

NEW
- Single lever basin mixer 110 with pop-up waste set

Chrome	75020000	165.00
Matt Black	75020670	231.00
Matt White	75020700	231.00

NEW



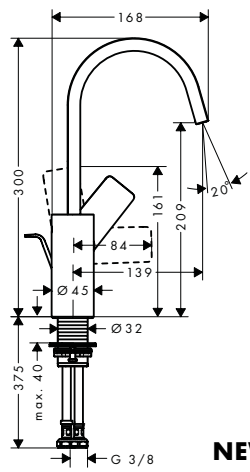

Single lever basin mixer 210 with swivel spout and pop-up waste set

- consists of: single lever basin mixer, waste set
- ComfortZone 210
- projection 139 mm
- swivel range 120°
- spray type: WaterfallStream
- maximum flow rate at 3 bar: 5 l/min
- ceramic cartridge
- temperature limitation adjustable
- suitable for continuous flow water heaters
- pop-up waste set G 1¼
- material waste set: metal
- connection type: G ⅜ connections
- connection dimension: DN15

	Chrome	75030000	245.00
	Matt Black	75030670	343.00
	Matt White	75030700	343.00

AirPower · EcoSmart · Comfort Zone

Alternative products:

NEW
- Single lever basin mixer 210 with swivel spout without waste set

Chrome	75032000	238.00
Matt Black	75032670	333.20
Matt White	75032700	333.20

NEW



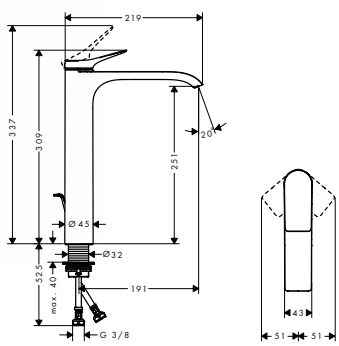

Single lever basin mixer 250 for washbowls with pop-up waste set

- consists of: single lever basin mixer, waste set
- ComfortZone 250
- projection 191 mm
- spray type: WaterfallStream
- maximum flow rate at 3 bar: 5 l/min
- ceramic cartridge
- temperature limitation adjustable
- suitable for continuous flow water heaters
- pop-up waste set G 1¼
- material waste set: metal
- connection type: G ⅜ connections
- connection dimension: DN15

	Chrome	75040000	254.00
	Matt Black	75040670	355.60
	Matt White	75040700	355.60

AirPower · EcoSmart · Comfort Zone

Alternative products:

NEW
- Single lever basin mixer 250 for washbowls without waste set

Chrome	75042000	247.00
Matt Black	75042670	345.80
Matt White	75042700	345.80

Measurements within scale drawings are in mm.

Technical specifications and units of measure are subject to change.

	finish	code no.	Euro
Pillar tap 80 for cold water or pre-adjusted water without waste set	Chrome	75013000	133.00
	Matt Black	75013670	186.20
	Matt White	75013700	186.20

AirPower · EcoSmart · Comfort Zone

- ComfortZone 80
- projection 133 mm
- spray type: WaterfallStream
- maximum flow rate at 3 bar: 5 l/min
- ceramic cartridge
- for cold water connection
- connection type: G ⅜ connections
- connection dimension: DN15

	finish	code no.	Euro
3-hole basin mixer 90 with pop-up waste set	Chrome	75033000	250.00
	Matt Black	75033670	350.00
	Matt White	75033700	350.00

AirPower · EcoSmart · Comfort Zone

- consists of: 3-hole basin mixer, waste set
- ComfortZone 90
- projection 150 mm
- spray type: WaterfallStream
- maximum flow rate at 3 bar: 5 l/min
- ceramic valves hot/ cold 90°
- suitable for continuous flow water heaters
- pop-up waste set G 1¼
- material waste set: metal
- connection type: G ⅜ connections
- connection dimension: DN15

	finish	code no.	Euro
Single lever basin mixer for concealed installation wall-mounted with spout 19,2 cm	Chrome	75050000	227.00
	Matt Black	75050670	317.80
	Matt White	75050700	317.80

AirPower · EcoSmart

- consists of: single lever basin mixer for concealed installation wall-mounted, waste set
- projection 192 mm
- spray type: WaterfallStream
- maximum flow rate at 3 bar: 5 l/min
- ceramic cartridge
- temperature limitation adjustable
- suitable for continuous flow water heaters
- non-closing waste set
- material waste set: metal
- connection type: basic set
- connection dimension: DN15
- handle can be positioned on the right or left, depends on the basic set installation

Required parts:

· Basic set for single lever basin mixer for concealed installation wall-mounted	13622180	220.50

Measurements within scale drawings are in mm.

Technical specifications and units of measure are subject to change.

	finish	code no.	Euro



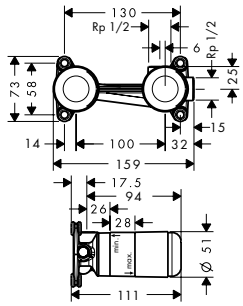

Basic set for single lever basin mixer for concealed installation wall-mounted

13622180 — 220.50

- installation depth: 44 - 72 mm
- variable positioning of the mixer system, can be left or right of the spout
- easy orientation due to support surfaces for the spirit level
- with building protection cover against contamination during assembly
- with dimension indication for exact determination of the installation depth
- with pre-mounted fastening lugs for mounting in drywall and solidwall
- sound-decoupled installation
- connection dimension: DN15

Optional parts:

- Extension set 2.5 cm — 31971000 — 112.80

Bidet

NEW



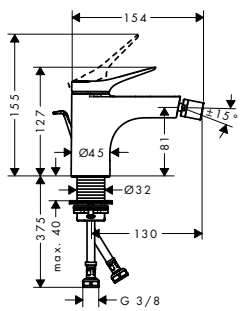

Single lever bidet mixer with pop-up waste set

Chrome	75200000	210.00
Matt Black	75200670	294.00
Matt White	75200700	294.00

- consists of: single lever bidet mixer, waste set
- projection 130 mm
- ball-pivot joint
- spray type: laminar spray
- maximum flow rate at 3 bar: 7,5 l/min
- ceramic cartridge
- temperature limitation adjustable
- suitable for continous flow water heaters
- pop-up waste set G 1¼
- material waste set: metal
- connection type: G ⅜ connections
- connection dimension: DN15

Measurements within scale drawings are in mm.

Bath

	finish	code no.	Euro
Single lever bath mixer floor-standing	Chrome	75445000	1,350.00
	Matt Black	75445670	1,890.00
	Matt White	75445700	1,890.00

NEW



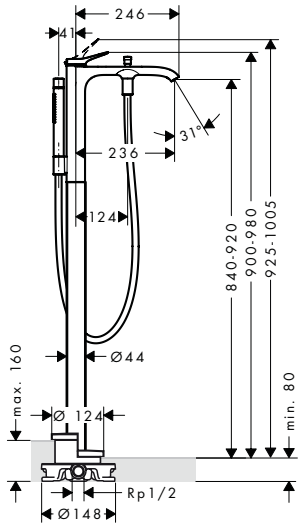

- consists of: single lever bath mixer floor standing, baton hand shower, shower hose, shower holder
- 2 functions
- projection 236 mm
- connection type: basic set
- spray type mixer: WaterfallStream
- spray type hand shower: Rain, Mono
- maximum flow rate at 3 bar: 21,3 l/min
- flow rate for bath spout at 3 bar: 21,3 l/min
- flow rate of hand shower at 3 bar: 13,4 l/min
- min. operating pressure: 1 bar
- max. operating pressure: 10 bar
- ceramic cartridge
- temperature limitation adjustable
- diverter with automatic resetting
- non-return valve
- connection dimension: DN15

Consisting of:

- Shower hose 125 cm (# 28272XXX)

Required parts:

· Basic set for mixers floor-standing	10452180	459.80

Optional parts:

· Sealing foil for basic set bath mixer floor-standing	96441000	127.30

Basic set for mixers floor-standing

	10452180	459.80



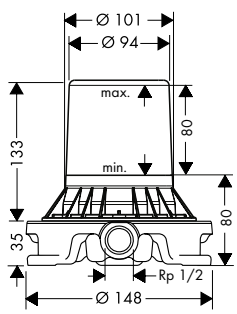

- for mounting on unfinished floor
- suitable for single lever bath mixer, single lever basin mixer and bath spout floor-standing
- connection dimension: DN15

Optional parts:

· Sealing foil for basic set bath mixer floor-standing	96441000	127.30

Single lever bath mixer for exposed installation

Chrome	75420000	230.00
Matt Black	75420670	322.00
Matt White	75420700	322.00

NEW



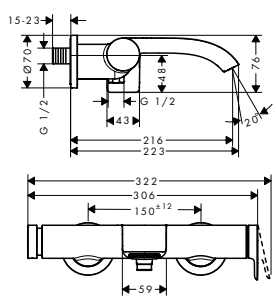

- 2 functions
- projection 216 mm
- connection type: s-shaped connections
- centre distance: 150 ± 12 mm
- spray type mixer: WaterfallStream
- maximum flow rate at 3 bar: 19,4 l/min
- flow rate for bath spout at 3 bar: 19,4 l/min
- min. operating pressure: 1 bar
- max. operating pressure: 10 bar
- ceramic cartridge
- temperature limitation adjustable
- pressure diverter Select with automatic resetting
- protected against backflow, according to DIN EN1717
- with silencer
- suitable for continous flow water heaters
- connection dimension: DN15

Measurements within scale drawings are in mm.

Technical specifications and units of measure are subject to change.

	finish	code no.	Euro

NEW



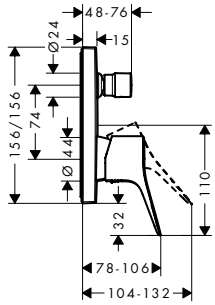

Single lever bath mixer for concealed installation for iBox universal

- 2 functions
- connection type: basic set
- flow rate upper outlet: 21 l/min
- flow rate lower outlet: 29 l/min
- min. operating pressure: 1 bar
- max. operating pressure: 10 bar
- ceramic cartridge
- temperature limitation adjustable
- diverter with automatic resetting
- with silencer

	Chrome	75415000	180.00
	Matt Black	75415670	252.00
	Matt White	75415700	252.00

Alternative products:

NEW

- Single lever bath mixer for concealed installation with integrated security combination according to EN1717 for iBox universal

Chrome	75416000	280.00
Matt Black	75416670	392.00
Matt White	75416700	392.00

Required parts:

- Basic set iBox universal — 01800180 — 137.30

Optional parts:

- Extension element

Chrome	13593000	46.80
Matt Black	13593670	65.50
Matt White	13593700	65.50



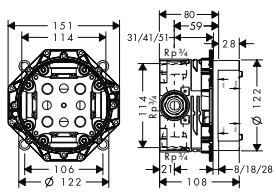

Basic set iBox universal

01800180 — 137.30

- suitable for all shower, bath tub and thermostat finish sets for concealed installation
- connection thread Rp ¾
- rotationally-symmetric installation
- sound-decoupled installation
- connection dimension: DN20

Alternative products:

- Basic set iBox universal with shut-off unit — 01850180 — 178.40

Optional parts:

- Extension iBox universal basic set 2.5 cm — 13595000 — 50.40
- Fastening rail set for iBox universal — 96615000 — 35.80
- Assembly aid for iBox universal — 93500000 — 13.00

NEW



Bath spout

Chrome	75410000	120.00
Matt Black	75410670	168.00
Matt White	75410700	168.00

AirPower

- 1 function
- connection type: G ½
- with escutcheon
- projection 202 mm
- wall-mounted
- maximum flow rate at 3 bar: 24,3 l/min
- spray type: WaterfallStream

Optional parts:

- Connecting thread G ¾ — 92504000 — 44.90

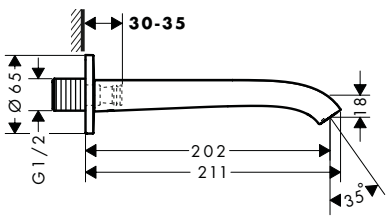

Measurements within scale drawings are in mm.

Technical specifications and units of measure are subject to change.

	finish	code no.	Euro
NEW 4-hole rim mounted bath mixer with sBox	Chrome	75444000	570.00
	Matt Black	75444670	798.00
	Matt White	75444700	798.00



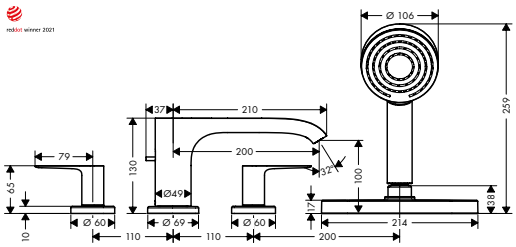

AirPower

- consists of: 4-hole rim mounted bath mixer, hand shower, shower holder, shower hose, hose box
- 2 functions
- connection type: basic set
- spray type mixer: WaterfallStream
- spray type hand shower: PowderRain
- maximum pull-out length of hand shower: 1.45 m
- sBox for quiet, smooth and protected hose guidance
- maximum flow rate at 3 bar: 23,9 l/min
- flow rate for bath spout at 3 bar: 23,9 l/min
- flow rate of hand shower at 3 bar: 10,5 l/min
- min. operating pressure: 1 bar
- max. operating pressure: 10 bar
- ceramic valves hot/ cold 90°
- non-return valve
- connection dimension: DN15

NEW **Consisting of:**
- Hand shower 105 1jet (# 24120XXX)
- Finish set oval (# 28020XXX)

NEW **Required parts:**

Basic set for 4-hole rim mounted bath mixer		13440180	425.00

NEW

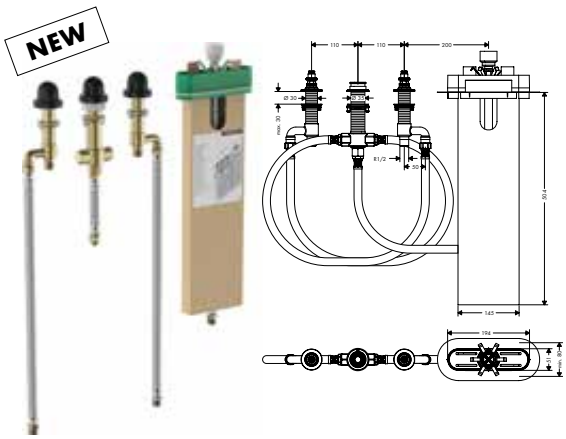

Basic set for 4-hole rim mounted bath mixer		13440180	425.00

- clamping range: 0 - 30 mm
- connection thread: G ½
- connection dimension: DN15
- bath rim width at least 100 mm

Shower

NEW



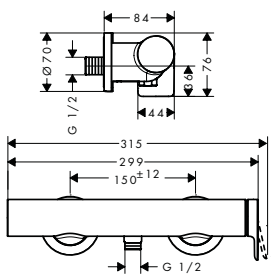

Single lever shower mixer for exposed installation	Chrome	75620000	180.00
	Matt Black	75620670	252.00
	Matt White	75620700	252.00

- 1 function
- connection type: s-shaped connections
- centre distance: 150 ± 12 mm
- maximum flow rate at 3 bar: 12,3 l/min
- ceramic cartridge
- min. operating pressure: 1 bar
- max. operating pressure: 10 bar
- temperature limitation adjustable
- non-return valve
- with silencer
- hose connection DN15
- connection dimension: DN15

Measurements within scale drawings are in mm.

Technical specifications and units of measure are subject to change.

	finish	code no.	Euro
Single lever shower mixer for concealed installation for iBox universal	Chrome	75615000	160.00
	Matt Black	75615670	224.00
	Matt White	75615700	224.00
· 1 function · connection type: basic set · maximum flow rate at 3 bar: 29,3 l/min · ceramic cartridge · min. operating pressure: 1 bar · max. operating pressure: 10 bar · temperature limitation adjustable · with silencer			
Required parts:			
· Basic set iBox universal		01800180	137.30
Optional parts:			
· Extension element	Chrome	13593000	46.80
	Matt Black	13593670	65.50
	Matt White	13593700	65.50



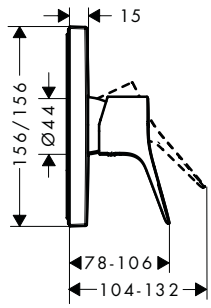

Basic set iBox universal		01800180	137.30
· suitable for all shower, bath tub and thermostat finish sets for concealed installation · connection thread Rp ¾ · rotationally-symmetric installation · sound-decoupled installation · connection dimension: DN20			
Alternative products:			
· Basic set iBox universal with shut-off unit		01850180	178.40
Optional parts:			
· Extension iBox universal basic set 2.5 cm		13595000	50.40
· Fastening rail set for iBox universal		96615000	35.80
· Assembly aid for iBox universal		93500000	13.00



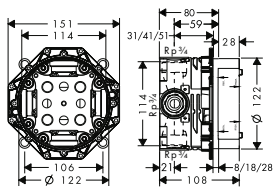

Measurements within scale drawings are in mm.

Technical specifications and units of measure are subject to change.

Talis®



Talis Select E / Talis E page 422 

Talis S page 446 

Talis Select S / Talis S page 433 

Basin



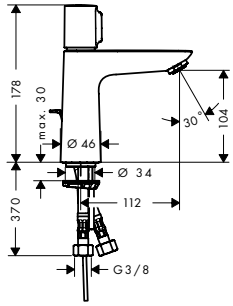

Basin mixer 110 with pop-up waste set

finish: Chrome | code no.: 71750000 | Euro: 193.70

Select · AirPower · EcoSmart · Comfort Zone · Quick Clean

- consists of: Basin mixer, waste set
- ComfortZone 110
- projection 112 mm
- spray type: normal spray
- maximum flow rate at 3 bar: 5 l/min
- Select cartridge with temperature control
- temperature limitation adjustable
- suitable for continuous flow water heaters
- pop-up waste set G 1¼
- material waste set: metal
- connection type: G ⅜ connections
- connection dimension: DN15

Alternative products:

- Basin mixer 110 without waste set — Chrome — 71751000 — 186.30

NEW



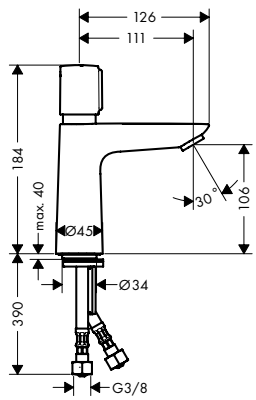

Self-closing basin mixer 110 with temperature control without waste set

finish: Chrome | code no.: 71718000 | Euro: 175.00

AirPower · EcoSmart · Comfort Zone

- ComfortZone 110
- projection 111 mm
- spray type: normal spray
- maximum flow rate at 3 bar: 5 l/min
- self closing cartridge with temperature control
- flushing time: 3 - 20 seconds adjustable (7 seconds pre-set)
- temperature limitation adjustable
- suitable for continuous flow water heaters
- thermal disinfection possible
- connection type: G ⅜ connections
- connection dimension: DN15
- service tool # 93913000 must be used for thermal disinfection

Optional parts:

NEW

- Service tool for thermal disinfection — 93913000 — 17.80

NEW



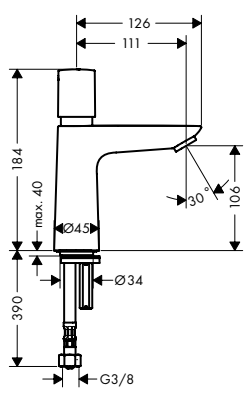

Self-closing pillar tap 110 for cold water or pre-adjusted water without waste set

finish: Chrome | code no.: 71719000 | Euro: 155.00

AirPower · EcoSmart · Comfort Zone

- ComfortZone 110
- projection 111 mm
- spray type: normal spray
- maximum flow rate at 3 bar: 5 l/min
- self closing cartridge
- flushing time: 3 - 20 seconds adjustable (7 seconds pre-set)
- for cold water connection
- permanent rinse possible
- connection type: G ⅜ connection hose
- connection dimension: DN15
- service tool # 93913000 must be used for thermal disinfection

Optional parts:

NEW

- Service tool for thermal disinfection — 93913000 — 17.80

Measurements within scale drawings are in mm.

Technical specifications and units of measure are subject to change.

	finish	code no.	Euro



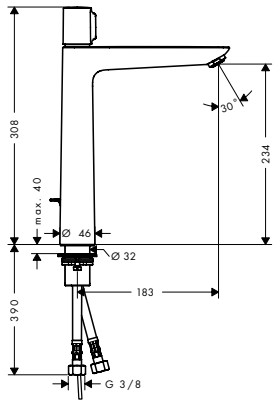

Basin mixer 240 with pop-up waste set

Chrome — 71752000 — 283.10

Select · AirPower · EcoSmart · Comfort Zone · Quick Clean

- consists of: Basin mixer, waste set
- ComfortZone 240
- projection 183 mm
- spray type: normal spray
- maximum flow rate at 3 bar: 5 l/min
- Select cartridge with temperature control
- temperature limitation adjustable
- suitable for continuous flow water heaters
- pop-up waste set G 1¼
- material waste set: metal
- connection type: G ⅜ connections
- connection dimension: DN15

Alternative products:

· Basin mixer 240 without waste set	Chrome	71753000	276.90



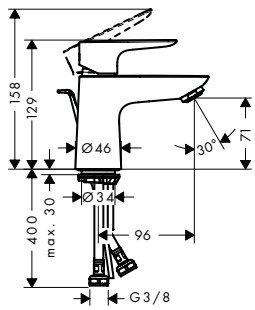

Single lever basin mixer 80 with pop-up waste set

Chrome — 71700000 — 116.60

AirPower · EcoSmart · Comfort Zone · Quick Clean

- consists of: single lever basin mixer, waste set
- ComfortZone 80
- projection 96 mm
- spray type: normal spray
- maximum flow rate at 3 bar: 5 l/min
- ceramic cartridge
- temperature limitation adjustable
- suitable for continuous flow water heaters
- pop-up waste set G 1¼
- material waste set: metal
- connection type: G ⅜ connections
- connection dimension: DN15

Alternative products:

· Single lever basin mixer 80 with push-open waste set	Chrome	71701000	116.60
· Single lever basin mixer 80 without waste set	Chrome	71702000	109.20
· Single lever basin mixer 80 LowFlow with pop-up waste set	Chrome	71705000	116.60
· Single lever basin mixer 80 for vented hot water cylinders with pop-up waste set	Chrome	71707000	225.50



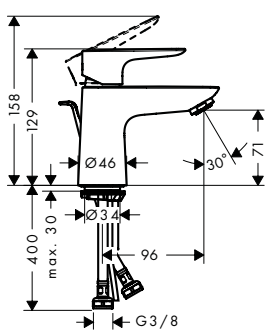

Single lever basin mixer 80 CoolStart with pop-up waste set

Chrome — 71703000 — 116.60

AirPower · EcoSmart · Comfort Zone · Quick Clean · CoolStart

- consists of: single lever basin mixer, waste set
- ComfortZone 80
- projection 96 mm
- spray type: normal spray
- maximum flow rate at 3 bar: 5 l/min
- ceramic cartridge
- temperature limitation adjustable
- suitable for continuous flow water heaters
- pop-up waste set G 1¼
- material waste set: metal
- connection type: G ⅜ connections
- connection dimension: DN15
- cold water in middle position

Alternative products:

· Single lever basin mixer 80 CoolStart without waste set	Chrome	71704000	109.20

Measurements within scale drawings are in mm.

Technical specifications and units of measure are subject to change.



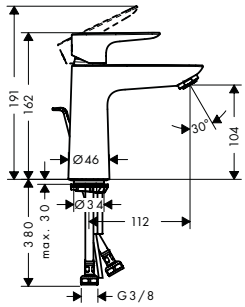

Single lever basin mixer 110 with pop-up waste set

- consists of: single lever basin mixer, waste set
- ComfortZone 110
- projection 112 mm
- spray type: normal spray
- maximum flow rate at 3 bar: 5 l/min
- ceramic cartridge
- temperature limitation adjustable
- suitable for continuous flow water heaters
- pop-up waste set G 1¼
- material waste set: metal
- connection type: G ⅜ connections
- connection dimension: DN15

finish	code no.	Euro
Chrome	71710000	142.30
Brushed Bronze	71710140	213.40
Brushed Black	71710340	213.40
Chrome		
Matt Black	71710670	199.10
Matt White	71710700	199.10
Polished Gold Optic	71710990	213.40

AirPower · EcoSmart · Comfort Zone · Quick Clean

Alternative products:

- Single lever basin mixer 110 with push-open waste set

Chrome	71711000	142.30

- Single lever basin mixer 110 without waste set

Chrome	71712000	134.80
Brushed Bronze	71712140	202.30
Brushed Black	71712340	202.30
Chrome		
Matt Black	71712670	188.70
Matt White	71712700	188.70
Polished Gold Optic	71712990	202.30

- Single lever basin mixer 110 LowFlow with pop-up waste set

Chrome	71715000	142.30



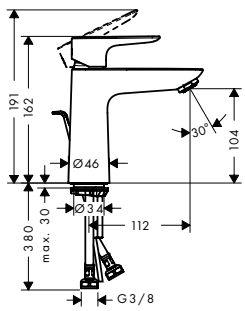

Single lever basin mixer 110 CoolStart with pop-up waste set

- consists of: single lever basin mixer, waste set
- ComfortZone 110
- projection 112 mm
- spray type: normal spray
- maximum flow rate at 3 bar: 5 l/min
- ceramic cartridge
- temperature limitation adjustable
- suitable for continuous flow water heaters
- pop-up waste set G 1¼
- material waste set: metal
- connection type: G ⅜ connections
- connection dimension: DN15
- cold water in middle position

finish	code no.	Euro
Chrome	71713000	142.30
Brushed Bronze	71713140	213.40
Brushed Black	71713340	213.40
Chrome		
Matt Black	71713670	199.10
Matt White	71713700	199.10
Polished Gold Optic	71713990	213.40

AirPower · EcoSmart · Comfort Zone · Quick Clean · CoolStart

Alternative products:

- Single lever basin mixer 110 CoolStart without waste set

Chrome	71714000	134.80
Brushed Bronze	71714140	202.30
Brushed Black	71714340	202.30
Chrome		
Matt Black	71714670	188.70
Matt White	71714700	188.70
Polished Gold Optic	71714990	202.30

Measurements within scale drawings are in mm.

Technical specifications and units of measure are subject to change.

	finish	code no.	Euro
Single lever basin mixer 150 with pop-up waste set	Chrome	71754000	219.60
· consists of: single lever basin mixer, waste set	Brushed Bronze	71754140	329.30
· ComfortZone 150	Brushed Black	71754340	329.30
· projection 141 mm	Chrome		
· spray type: normal spray	Matt Black	71754670	307.40
· maximum flow rate at 3 bar: 5 l/min	Matt White	71754700	307.40
· ceramic cartridge	Polished Gold Optic	71754990	329.30
· temperature limitation adjustable			
· suitable for continuous flow water heaters			
· pop-up waste set G 1¼			
· material waste set: metal			
· connection type: G ⅜ connections			
· connection dimension: DN15			
Alternative products:			
· Single lever basin mixer 150 without waste set	Chrome	71755000	212.10

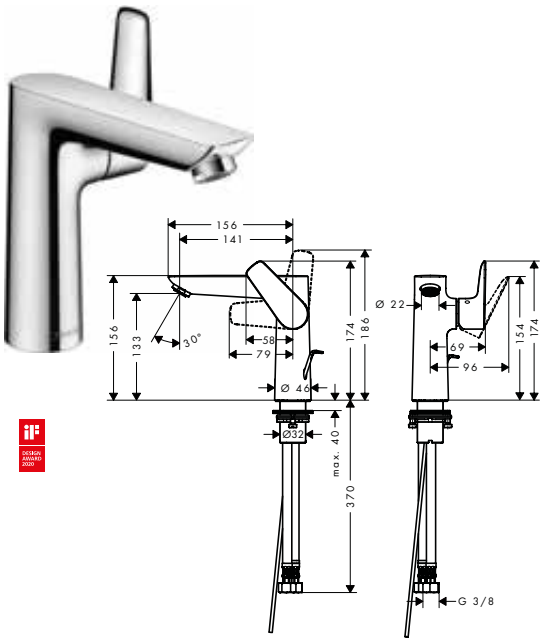

	finish	code no.	Euro
Single lever basin mixer 240 with pop-up waste set	Chrome	71716000	237.80
· consists of: single lever basin mixer, waste set	Brushed Bronze	71716140	356.90
· ComfortZone 240	Brushed Black	71716340	356.90
· projection 183 mm	Chrome		
· spray type: normal spray	Matt Black	71716670	333.00
· maximum flow rate at 3 bar: 5 l/min	Matt White	71716700	333.00
· ceramic cartridge	Polished Gold Optic	71716990	356.90
· temperature limitation adjustable			
· suitable for continuous flow water heaters			
· pop-up waste set G 1¼			
· material waste set: metal			
· connection type: G ⅜ connections			
· connection dimension: DN15			
Alternative products:			
· Single lever basin mixer 240 without waste set	Chrome	71717000	231.70
	Brushed Bronze	71717140	347.70
	Brushed Black	71717340	347.70
	Chrome		
	Matt Black	71717670	324.50
	Matt White	71717700	324.50
	Polished Gold Optic	71717990	347.70

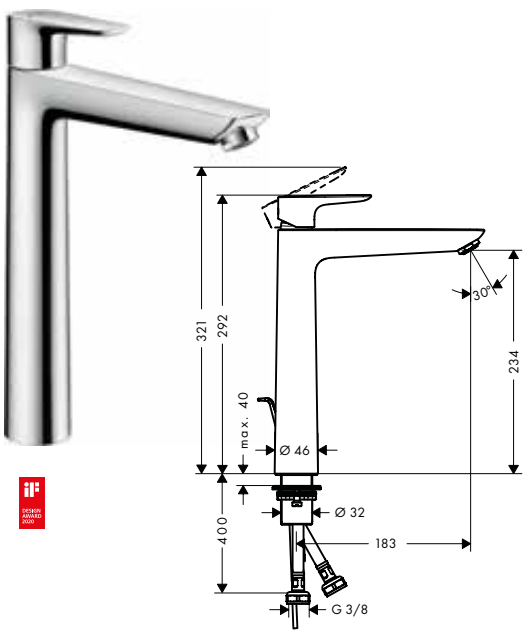

Pillar tap 80 for cold water or pre-adjusted water without waste set	Chrome	71706000	102.90
· ComfortZone 80			
· projection 96 mm			
· spray type: normal spray			
· maximum flow rate at 3 bar: 5 l/min			
· ceramic cartridge			
· for cold water connection			
· connection type: G ⅜ connections			
· connection dimension: DN15			

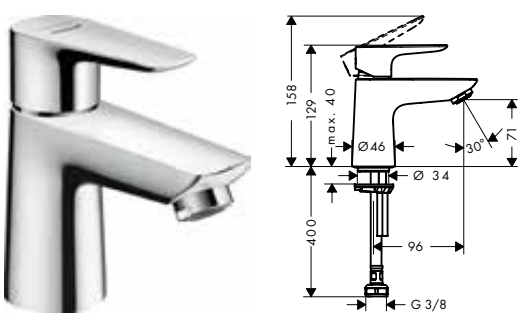

Measurements within scale drawings are in mm.

Technical specifications and units of measure are subject to change.



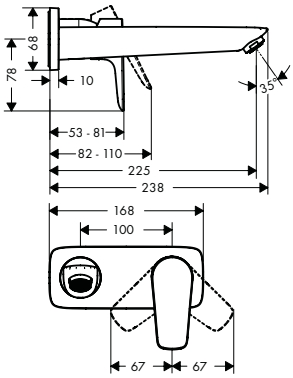

Single lever basin mixer for concealed installation wall-mounted with spout 22.5 cm

- consists of: single lever basin mixer for concealed installation wall-mounted, waste set
- projection 225 mm
- spray type: normal spray
- maximum flow rate at 3 bar: 5 l/min
- ceramic cartridge
- temperature limitation adjustable
- suitable for continuous flow water heaters
- non-closing waste set
- material waste set: metal
- connection type: basic set
- connection dimension: DN15
- handle can be positioned on the right or left, depends on the basic set installation

finish	code no.	Euro
Chrome	71734000	225.50
Brushed Bronze	71734140	338.30
Brushed Black	71734340	338.30
Chrome		
Matt Black	71734670	315.80
Matt White	71734700	315.80
Polished Gold Optic	71734990	338.30

AirPower EcoSmart Quick Clean

Alternative sizes:

- Single lever basin mixer for concealed installation wall-mounted with spout 16.5 cm — Chrome — 71732000 — 199.70

Required parts:

- Basic set for single lever basin mixer for concealed installation wall-mounted — 13622180 — 220.50



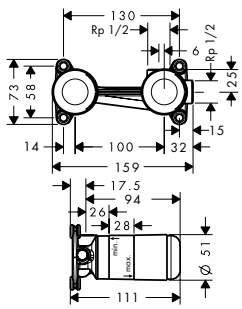

Basic set for single lever basin mixer for concealed installation wall-mounted

13622180 — 220.50

- installation depth: 44 - 72 mm
- variable positioning of the mixer system, can be left or right of the spout
- easy orientation due to support surfaces for the spirit level
- with building protection cover against contamination during assembly
- with dimension indication for exact determination of the installation depth
- with pre-mounted fastening lugs for mounting in drywall and solidwall
- sound-decoupled installation
- connection dimension: DN15

Optional parts:

- Extension set 2.5 cm — 31971000 — 112.80



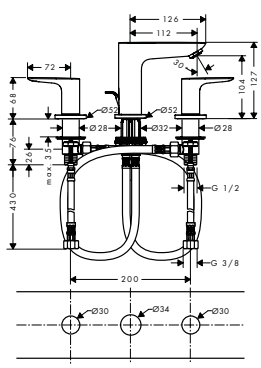

3-hole basin mixer with pop-up waste set

- consists of: 3-hole basin mixer, waste set
- ComfortZone 150
- projection 112 mm
- maximum flow rate at 3 bar: 5 l/min
- ceramic valves hot/ cold 90°
- suitable for continuous flow water heaters
- pop-up waste set G 1¼
- material waste set: metal
- connection type: G ⅜ connections
- connection dimension: DN15

Chrome	71733000	257.40
Brushed Bronze	71733140	386.20
Brushed Black	71733340	386.20
Chrome		
Matt Black	71733670	360.30
Matt White	71733700	360.30
Polished Gold Optic	71733990	386.20

AirPower EcoSmart Comfort Zone Quick Clean

Measurements within scale drawings are in mm.

Technical specifications and units of measure are subject to change.

Bidet



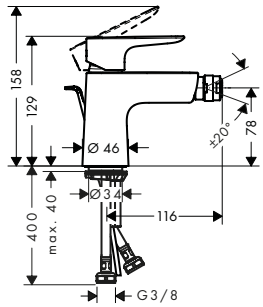

Single lever bidet mixer with pop-up waste set

- consists of: single lever bidet mixer, waste set
- projection 116 mm
- aerator with ball pivot
- spray type: normal spray
- maximum flow rate at 3 bar: 5 l/min
- ceramic cartridge
- temperature limitation adjustable
- suitable for continous flow water heaters
- material waste set: metal
- connection type: G ⅜ connections
- connection dimension: DN15

finish	code no.	Euro
Chrome	71720000	142.30
Brushed Bronze	71720140	213.40
Brushed Black	71720340	213.40
Chrome		
Matt Black	71720670	199.10
Matt White	71720700	199.10
Polished Gold Optic	71720990	213.40

AirPower · EcoSmart · Comfort Zone · Quick Clean

Alternative products:

- Single lever bidet mixer with push-open waste set — Chrome — 71721000 — 142.30



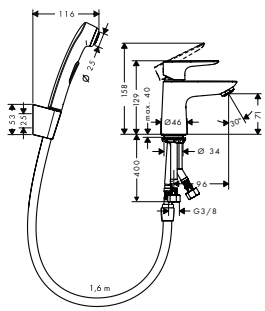

Single lever basin mixer with bidette hand shower and shower hose 160 cm

- consists of: single lever basin mixer, bidette hand shower, shower holder, shower hose, waste set
- maximum flow rate at 3 bar: 5,7 l/min
- ceramic cartridge
- temperature limitation adjustable
- suitable for continuous flow water heaters
- push-open waste set G 1¼
- material waste set: metal
- connection type: G ⅜ connections
- connection dimension: DN15

Chrome	71729000	212.10

AirPower · EcoSmart · Quick Clean

Bath



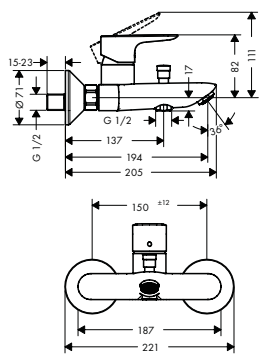

Single lever bath mixer for exposed installation

- 2 functions
- projection 194 mm
- connection type: s-shaped connections
- centre distance: 150 ± 12 mm
- spray type mixer: normal spray
- maximum flow rate at 3 bar: 19,2 l/min
- flow rate for bath spout at 3 bar: 19,2 l/min
- flow rate of hand shower at 3 bar: 16,8 l/min
- ceramic cartridge
- temperature limitation adjustable
- diverter with automatic resetting
- with silencer
- suitable for continous flow water heaters
- connection dimension: DN15

Chrome	71740000	186.30
Brushed Bronze	71740140	279.50
Brushed Black	71740340	279.50
Chrome		
Matt Black	71740670	260.80
Matt White	71740700	260.80
Polished Gold Optic	71740990	279.50

AirPower · Quick Clean

Measurements within scale drawings are in mm.

Technical specifications and units of measure are subject to change.



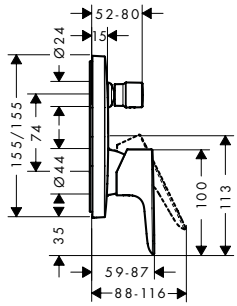

Single lever bath mixer for concealed installation for iBox universal

- 2 functions
- connection type: basic set
- flow rate upper outlet: 21 l/min
- flow rate lower outlet: 29 l/min
- ceramic cartridge
- temperature limitation adjustable
- diverter with automatic resetting
- with silencer

finish	code no.	Euro
Chrome	71745000	154.40
Brushed Bronze	71745140	231.60
Brushed Black Chrome	71745340	231.60
Matt Black	71745670	216.10
Matt White	71745700	216.10
Polished Gold Optic	71745990	231.60

Alternative products:

- Single lever bath mixer for concealed installation with integrated security combination according to EN1717 for iBox universal

Chrome	71474000	271.10
Brushed Bronze	71474140	406.60
Brushed Black Chrome	71474340	406.60
Matt Black	71474670	379.40
Matt White	71474700	379.40
Polished Gold Optic	71474990	406.60

Required parts:

- Basic set iBox universal — 01800180 — 137.30



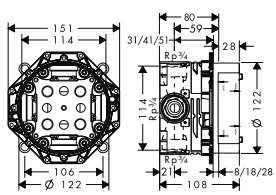

Basic set iBox universal

01800180 — 137.30

- suitable for all shower, bath tub and thermostat finish sets for concealed installation
- connection thread Rp ¾
- rotationally-symmetric installation
- sound-decoupled installation
- connection dimension: DN20

Alternative products:

- Basic set iBox universal with shut-off unit — 01850180 — 178.40

Optional parts:

Extension iBox universal basic set 2.5 cm	13595000	50.40
Fastening rail set for iBox universal	96615000	35.80
Assembly aid for iBox universal	93500000	13.00



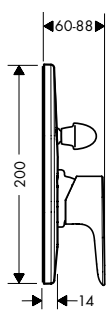

Single lever bath mixer for concealed installation

Chrome — 71746000 — 71.00

- 2 functions
- connection type: basic set
- ceramic cartridge
- temperature limitation adjustable
- diverter with automatic resetting

Required parts:

- Basic set for single lever bath mixer for concealed installation — 31741180 — 124.50



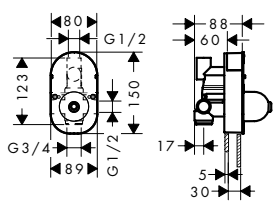

Basic set for single lever bath mixer for concealed installation

31741180 — 124.50

- ceramic cartridge
- temperature limitation adjustable
- installation depth: 55 - 83 mm
- connection dimension: DN15

Optional parts:

- Extension for basic set for single lever bath mixer for concealed installation — 32498000 — 127.30

Measurements within scale drawings are in mm.

Technical specifications and units of measure are subject to change.

	finish	code no.	Euro


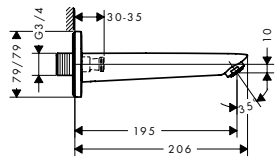

Bath spout

Chrome 71410000 92.10

- 1 function
- connection type: G ¾
- with escutcheon
- projection 195 mm
- wall-mounted
- maximum flow rate at 3 bar: 21 l/min
- connection dimension: DN20
- spray type: normal spray


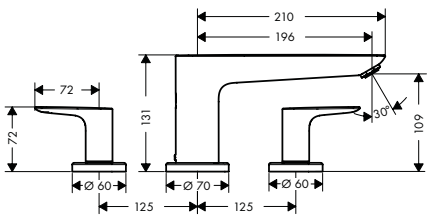

3-hole rim mounted bath mixer

Chrome 71747000 245.20

- 2 functions
- projection 196 mm
- ceramic cartridge
- non-return valve
- with silencer

Required parts:

- Basic set for 3-hole rim mounted bath mixer — 13233180 188.70


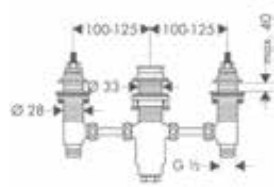

Basic set for 3-hole rim mounted bath mixer

13233180 188.70

- maintenance opening required
- connection thread: G ½
- connection dimension: DN15
- ceramic valves hot/ cold 90°


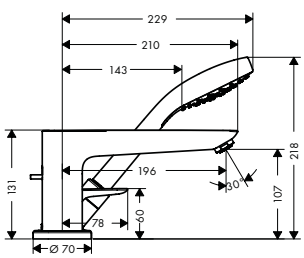

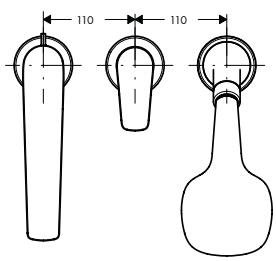

3-hole rim mounted single lever bath mixer for Secuflex

Chrome 71730000 540.60

- consists of: 3-hole rim mounted single lever bath mixer, hand shower, shower holder
- 2 functions
- projection 196 mm
- connection type: basic set
- spray type mixer: normal spray
- spray type hand shower: Rain
- maximum pull-out length of hand shower: 1.10 m
- flow rate for bath spout at 3 bar: 18 l/min
- flow rate of hand shower at 3 bar: 15 l/min
- ceramic cartridge
- temperature limitation adjustable
- diverter with automatic resetting
- non-return valve
- connection dimension: DN15

Consisting of:

- Hand shower 1jet (# 26814400)

Required parts:

- Basic set for 3-hole rim mounted single lever bath mixer — 13437180 686.60

Measurements within scale drawings are in mm.

Technical specifications and units of measure are subject to change.

	finish	code no.	Euro
 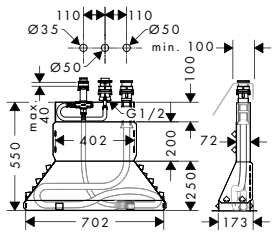			
Basic set for 3-hole rim mounted single lever bath mixer · consists of: basic set, shower hose, Secubox · maximum pull-out length of hand shower: 1.10 m · connection thread: G ½ · connection dimension: DN15		13437180	686.60
Optional parts: · Secuflex insert extension		98806000	4.10
			
3-hole rim mounted single lever bath mixer · consists of: 3-hole rim mounted single lever bath mixer, hand shower · 2 functions · projection 196 mm · spray type mixer: normal spray · spray type hand shower: Rain · maximum pull-out length of hand shower: 1.60 m · flow rate for bath spout at 3 bar: 19 l/ min · flow rate of hand shower at 3 bar: 15 l/ min · ceramic cartridge · temperature limitation adjustable · diverter with automatic resetting · non-return valve · suitable for continous flow water heaters · connection dimension: DN15	Chrome	71731000	386.20
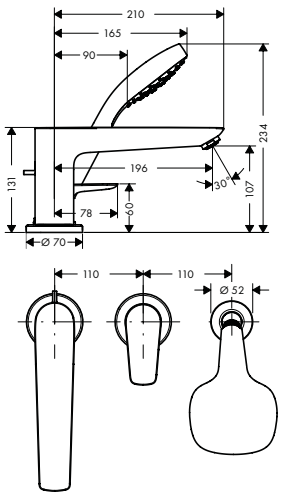			
Consisting of: · Hand shower 1jet (# 26814400)			
Required parts: · Basic set for 3-hole rim mounted single lever bath mixer		13439180	350.10
 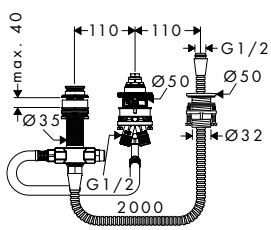			
Basic set for 3-hole rim mounted single lever bath mixer · consists of: basic set, shower holder, shower hose · maximum pull-out length of hand shower: 1.60 m · maintenance opening required · connection dimension: G ½		13439180	350.10

Measurements within scale drawings are in mm.

Technical specifications and units of measure are subject to change.

	finish	code no.	Euro
4-hole rim mounted bath mixer			
· consists of: 4-hole rim mounted bath mixer, hand shower	Chrome	71748000	386.20
· 2 functions	Brushed Bronze	71748140	579.30
· projection 196 mm	Brushed Black Chrome	71748340	579.30
· maximum pull-out length of hand shower: 1.60 m	Matt Black	71748670	540.70
· maximum flow rate at 3 bar: 23,8 l/ min	Matt White	71748700	540.70
· flow rate for bath spout at 3 bar: 23,8 l/ min	Polished Gold Optic	71748990	579.30
· flow rate of hand shower at 3 bar: 16,7 l/ min			
· min. operating pressure: 1 bar			
· non-return valve			
· connection dimension: DN15			
Consisting of:			
· Hand shower 1jet (# 26814XXX)			
Required parts:			
· Basic set for 4-hole rim mounted bath mixer		13244180	289.00
Basic set for 4-hole rim mounted bath mixer		13244180	289.00
· consists of: basic set, shower holder, shower hose			
· maximum pull-out length of hand shower: 1.60 m			
· maintenance opening required			
· suitable for 4-hole rim mounted bath mixer			
· connection thread: G ½			
· connection dimension: DN15			
· ceramic valves hot/ cold 90°			

Shower

Single lever shower mixer for exposed installation	Chrome	71760000	160.60
· 1 function	Brushed Bronze	71760140	241.00
· connection type: s-shaped connections	Brushed Black Chrome	71760340	241.00
· centre distance: 150 ± 12 mm	Matt Black	71760670	224.80
· maximum flow rate at 3 bar: 22 l/ min	Matt White	71760700	224.80
· flow rate of hand shower at 3 bar: 22 l/ min	Polished Gold Optic	71760990	241.00
· ceramic cartridge			
· temperature limitation adjustable			
· non-return valve			
· with silencer			
· hose connection DN15			
· connection dimension: DN15			
Alternative products:			
· Single lever shower mixer for exposed installation with centre distance 15.3 cm CH	Chrome	71761000	180.30

Measurements within scale drawings are in mm.

Technical specifications and units of measure are subject to change.

	finish	code no.	Euro
 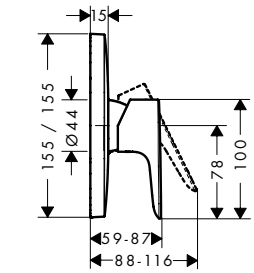	**Single lever shower mixer for concealed installation for iBox universal** · 1 function · connection type: basic set · maximum flow rate at 3 bar: 29,3 l/min · ceramic cartridge · temperature limitation adjustable	Chrome Brushed Bronze Brushed Black Chrome Matt Black Matt White Polished Gold Optic	71765000 71765140 71765340 71765670 71765700 71765990	128.70 193.10 193.10 180.20 180.20 193.10
	Alternative products: · Single lever shower mixer HighFlow for concealed installation for iBox universal	Chrome	71768000	128.70
	Required parts: · Basic set iBox universal		01800180	137.30
 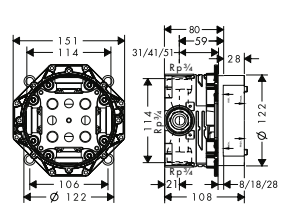	**Basic set iBox universal** · suitable for all shower, bath tub and thermostat finish sets for concealed installation · connection thread Rp ¾ · rotationally-symmetric installation · sound-decoupled installation · connection dimension: DN20		01800180	137.30
	Alternative products: · Basic set iBox universal with shut-off unit		01850180	178.40
	Optional parts: · Extension iBox universal basic set 2.5 cm · Fastening rail set for iBox universal · Assembly aid for iBox universal		13595000 96615000 93500000	50.40 35.80 13.00
 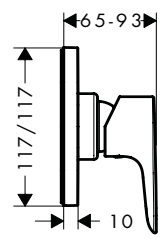	**Single lever shower mixer for concealed installation** · 1 function · connection type: basic set · maximum flow rate at 3 bar: 28,7 l/min · min. operating pressure: 1 bar · max. operating pressure: 10 bar	Chrome Matt Black	71764000 71764670	51.50 72,10
	Required parts: · Basic set for single lever shower mixer for concealed installation		13620180	110.60
 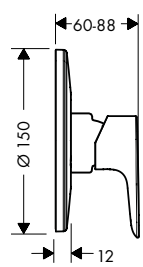	**Single lever shower mixer for concealed installation** · 1 function · connection type: basic set · maximum flow rate at 3 bar: 28,7 l/min · min. operating pressure: 1 bar · max. operating pressure: 10 bar	Chrome	71766000	51.50
	Required parts: · Basic set for single lever shower mixer for concealed installation		13620180	110.60
 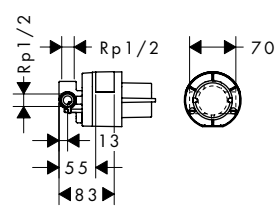	**Basic set for single lever shower mixer for concealed installation** · ceramic cartridge · temperature limitation adjustable · installation depth: 55 - 83 mm · connection dimension: DN15		13620180	110.60
	Optional parts: · Extension set for basic set for single lever shower mixer for concealed installation		32698000	98.10

Measurements within scale drawings are in mm.

Technical specifications and units of measure are subject to change.

Basin

	finish	code no.	Euro



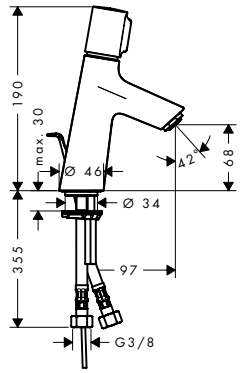

Basin mixer 80
with pop-up waste set

· consists of: Basin mixer, waste set
· ComfortZone 80
· projection 97 mm
· spray type: normal spray
· maximum flow rate at 3 bar: 5 l/min
· Select cartridge with temperature control
· temperature limitation adjustable
· suitable for continuous flow water heaters
· pop-up waste set G 1¼
· material waste set: metal
· connection type: G ⅜ connections
· connection dimension: DN15

	finish	code no.	Euro
	Chrome	72040000	193.70

Alternative products:

· Basin mixer 80 without waste set	Chrome	72041000	186.30



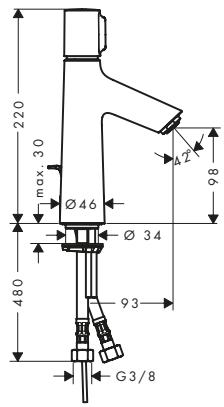

Basin mixer 100
with pop-up waste set

· consists of: Basin mixer, waste set
· ComfortZone 100
· projection 93 mm
· spray type: normal spray
· maximum flow rate at 3 bar: 5 l/min
· Select cartridge with temperature control
· temperature limitation adjustable
· suitable for continuous flow water heaters
· pop-up waste set G 1¼
· material waste set: metal
· connection type: G ⅜ connections
· connection dimension: DN15

	finish	code no.	Euro
	Chrome	72042000	231.70

Alternative products:

· Basin mixer 100 without waste set	Chrome	72043000	225.50



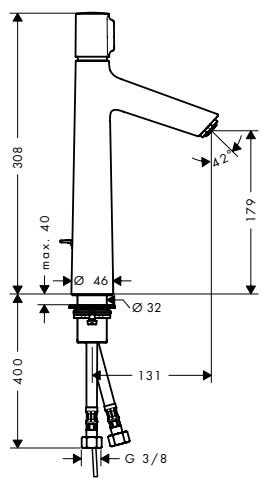

Basin mixer 190
with pop-up waste set

· consists of: Basin mixer, waste set
· ComfortZone 190
· projection 131 mm
· spray type: normal spray
· maximum flow rate at 3 bar: 5 l/min
· Select cartridge with temperature control
· temperature limitation adjustable
· suitable for continuous flow water heaters
· pop-up waste set G 1¼
· material waste set: metal
· connection type: G ⅜ connections
· connection dimension: DN15

	finish	code no.	Euro
	Chrome	72044000	308.90

Alternative products:

· Basin mixer 190 without waste set	Chrome	72045000	311.50

Measurements within scale drawings are in mm.

	finish	code no.	Euro



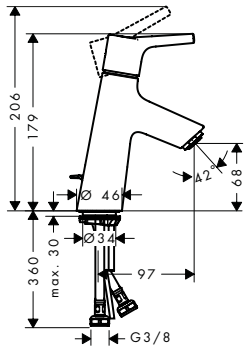

Single lever basin mixer 80 with pop-up waste set

Chrome — 72010000 — 142.30

AirPower · EcoSmart · Comfort Zone · Quick Clean

- consists of: single lever basin mixer, waste set
- ComfortZone 80
- projection 97 mm
- spray type: normal spray
- maximum flow rate at 3 bar: 5 l/min
- ceramic cartridge
- temperature limitation adjustable
- suitable for continuous flow water heaters
- pop-up waste set G 1¼
- material waste set: metal
- connection type: G ⅜ connections
- connection dimension: DN15

Alternative products:

· Single lever basin mixer 80 with push-open waste set	Chrome	72011000	142.30
· Single lever basin mixer 80 LowFlow with pop-up waste set	Chrome	72015000	142.30
· Single lever basin mixer 80 without waste set	Chrome	72012000	134.80
· Single lever basin mixer 80 LowFlow without waste set	Chrome	72018000	134.80



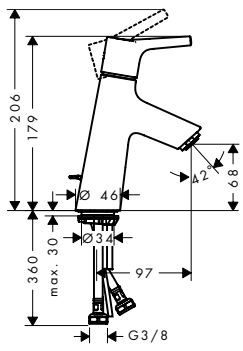

Single lever basin mixer 80 CoolStart with pop-up waste set

Chrome — 72013000 — 142.30

AirPower · EcoSmart · Comfort Zone · Quick Clean · CoolStart

- consists of: single lever basin mixer, waste set
- ComfortZone 80
- projection 97 mm
- spray type: normal spray
- maximum flow rate at 3 bar: 5 l/min
- ceramic cartridge
- temperature limitation adjustable
- suitable for continuous flow water heaters
- pop-up waste set G 1¼
- material waste set: metal
- connection type: G ⅜ connections
- connection dimension: DN15
- cold water in middle position

Alternative products:

· Single lever basin mixer 80 CoolStart without waste set	Chrome	72014000	134.80

Measurements within scale drawings are in mm.

Technical specifications and units of measure are subject to change.

	finish	code no.	Euro



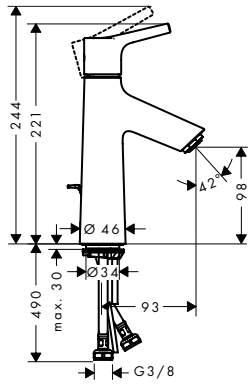

Single lever basin mixer 100 with pop-up waste set

Chrome — 72020000 — 168.00

AirPower · EcoSmart · Comfort Zone · Quick Clean

- consists of: single lever basin mixer, waste set
- ComfortZone 100
- projection 93 mm
- spray type: normal spray
- maximum flow rate at 3 bar: 5 l/min
- ceramic cartridge
- temperature limitation adjustable
- suitable for continuous flow water heaters
- pop-up waste set G 1¼
- material waste set: metal
- connection type: G ⅜ connections
- connection dimension: DN15

Alternative products:

- Single lever basin mixer 100 LowFlow with pop-up waste set — Chrome — 72024000 — 168.00
- Single lever basin mixer 100 without waste set — Chrome — 72021000 — 160.60
- Single lever basin mixer 100 LowFlow without waste set — Chrome — 72025000 — 160.60



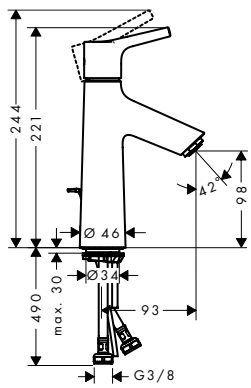

Single lever basin mixer 100 CoolStart with pop-up waste set

Chrome — 72022000 — 168.00

AirPower · EcoSmart · Comfort Zone · Quick Clean · CoolStart

- consists of: single lever basin mixer, waste set
- ComfortZone 100
- projection 93 mm
- spray type: normal spray
- maximum flow rate at 3 bar: 5 l/min
- ceramic cartridge
- temperature limitation adjustable
- suitable for continuous flow water heaters
- pop-up waste set G 1¼
- material waste set: metal
- connection type: G ⅜ connections
- connection dimension: DN15
- cold water in middle position

Alternative products:

- Single lever basin mixer 100 CoolStart without waste set — Chrome — 72023000 — 160.60



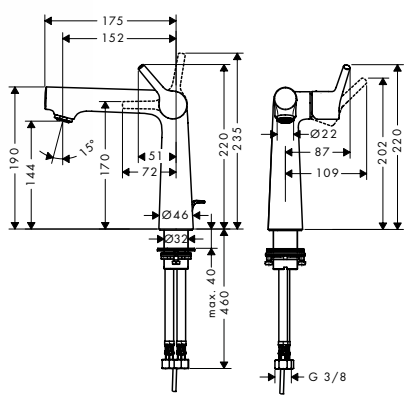

Single lever basin mixer 140 with pop-up waste set

Chrome — 72113000 — 451.20

AirPower · EcoSmart · Comfort Zone · Quick Clean

- consists of: single lever basin mixer, waste set
- ComfortZone 140
- projection 152 mm
- spray type: normal spray
- maximum flow rate at 3 bar: 5 l/min
- ceramic cartridge
- temperature limitation adjustable
- suitable for continuous flow water heaters
- pop-up waste set G 1¼
- material waste set: metal
- connection type: G ⅜ connections
- connection dimension: DN15

Measurements within scale drawings are in mm.

	finish	code no.	Euro



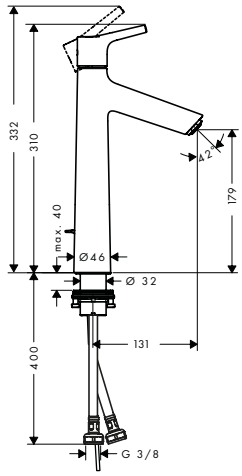

Single lever basin mixer 190 with pop-up waste set

Chrome 72031000 257.40

AirPower EcoSmart Comfort Zone Quick Clean

- consists of: single lever basin mixer, waste set
- ComfortZone 190
- projection 131 mm
- spray type: normal spray
- maximum flow rate at 3 bar: 5 l/min
- ceramic cartridge
- temperature limitation adjustable
- suitable for continuous flow water heaters
- pop-up waste set G 1¼
- material waste set: metal
- connection type: G ⅜ connections
- connection dimension: DN15

Alternative products:

- Single lever basin mixer 190 without waste set — Chrome 72032000 251.20

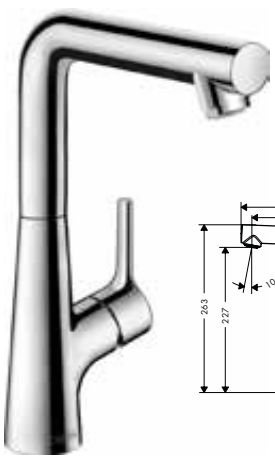

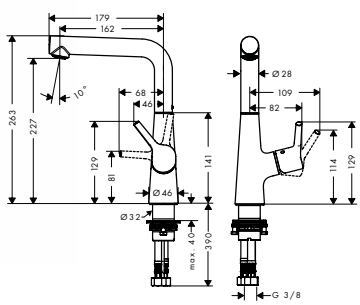

Single lever basin mixer 210 with swivel spout and pop-up waste set

Chrome 72105000 283.10

AirPower EcoSmart Comfort Zone Quick Clean

- consists of: single lever basin mixer, waste set
- ComfortZone 210
- projection 162 mm
- swivel range 120°
- spray type: normal spray
- maximum flow rate at 3 bar: 5 l/min
- ceramic cartridge
- temperature limitation adjustable
- suitable for continuous flow water heaters
- pop-up waste set G 1¼
- material waste set: metal
- connection type: G ⅜ connections
- connection dimension: DN15

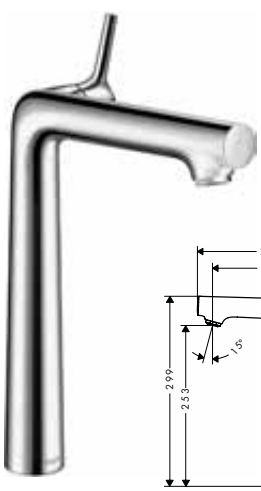

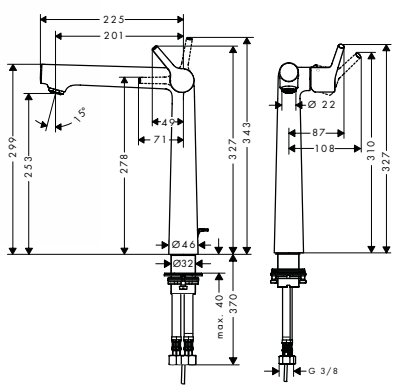

Single lever basin mixer 250 with pop-up waste set

Chrome 72115000 554.10

AirPower EcoSmart Comfort Zone Quick Clean

- consists of: single lever basin mixer, waste set
- ComfortZone 250
- projection 201 mm
- spray type: normal spray
- maximum flow rate at 3 bar: 5 l/min
- ceramic cartridge
- temperature limitation adjustable
- suitable for continuous flow water heaters
- pop-up waste set G 1¼
- material waste set: metal
- connection type: G ⅜ connections
- connection dimension: DN15

Alternative products:

- Single lever basin mixer 250 without waste set — Chrome 72116000 546.70

Measurements within scale drawings are in mm.

Technical specifications and units of measure are subject to change.

	finish	code no.	Euro



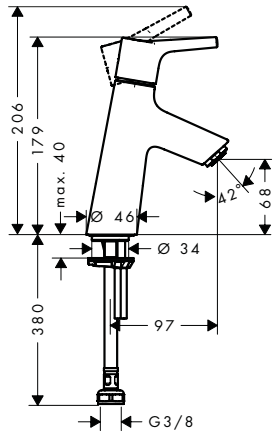

Pillar tap 80 for cold water or pre-adjusted water without waste set

Chrome — 72017000 — 128.70

AirPower · EcoSmart · Comfort Zone · Quick Clean

- ComfortZone 80
- projection 97 mm
- spray type: normal spray
- maximum flow rate at 3 bar: 5 l/min
- ceramic cartridge
- for cold water connection
- connection type: G ⅜ connections
- connection dimension: DN15



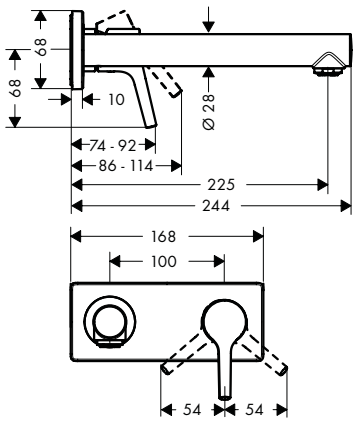

Single lever basin mixer for concealed installation wall-mounted with spout 22.5 cm

Chrome — 72111000 — 245.20

AirPower · EcoSmart · Quick Clean

- consists of: single lever basin mixer for concealed installation wall-mounted, waste set
- projection 225 mm
- spray type: normal spray
- maximum flow rate at 3 bar: 5 l/min
- ceramic cartridge
- temperature limitation adjustable
- suitable for continuous flow water heaters
- non-closing waste set
- material waste set: metal
- connection type: basic set
- connection dimension: DN15
- handle can be positioned on the right or left, depends on the basic set installation

Alternative sizes:

- Single lever basin mixer for concealed installation wall-mounted with spout 16.5 cm — Chrome — 72110000 — 219.60

Required parts:

- Basic set for single lever basin mixer for concealed installation wall-mounted — 13622180 — 220.50



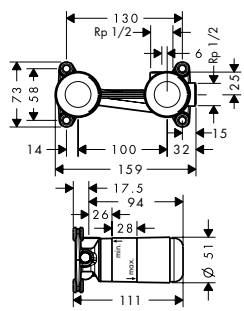

Basic set for single lever basin mixer for concealed installation wall-mounted

13622180 — 220.50

- installation depth: 44 - 72 mm
- variable positioning of the mixer system, can be left or right of the spout
- easy orientation due to support surfaces for the spirit level
- with building protection cover against contamination during assembly
- with dimension indication for exact determination of the installation depth
- with pre-mounted fastening lugs for mounting in drywall and solidwall
- sound-decoupled installation
- connection dimension: DN15

Optional parts:

- Extension set 2.5 cm — 31971000 — 112.80

Measurements within scale drawings are in mm.

Bidet

	finish	code no.	Euro



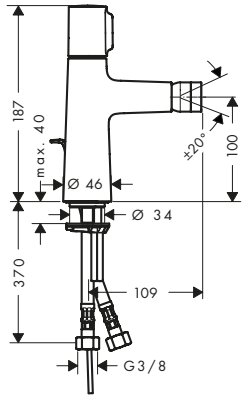

Bidet mixer with pop-up waste set

Chrome — 72202000 — 219.60

Select · AirPower · Quick Clean

- consists of: Bidet mixer, waste set
- aerator with ball pivot
- spray type: normal spray
- maximum flow rate at 3 bar: 5 l/min
- Select cartridge with temperature control
- temperature limitation adjustable
- suitable for continous flow water heaters
- material waste set: metal
- connection type: G ⅜ connections
- connection dimension: DN15



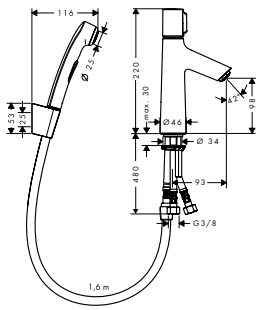

Basin mixer 100 with bidette hand shower and shower hose 160 cm

Chrome — 72291000 — 271.10

Select · AirPower · EcoSmart · Quick Clean

- consists of: Basin mixer, bidette hand shower, shower holder, shower hose, waste set
- maximum flow rate at 3 bar: 5 l/min
- ceramic cartridge
- temperature limitation adjustable
- suitable for continuous flow water heaters
- push-open waste set G 1¼
- material waste set: synthetic
- connection type: G ⅜ connections
- connection dimension: DN15



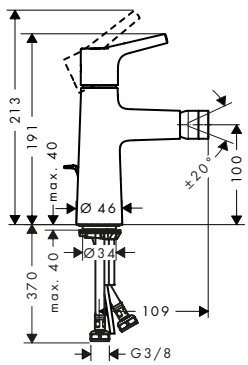

Single lever bidet mixer with pop-up waste set

Chrome — 72200000 — 168.00

AirPower · Quick Clean

- consists of: single lever bidet mixer, waste set
- projection 109 mm
- aerator with ball pivot
- spray type: normal spray
- maximum flow rate at 3 bar: 5 l/min
- ceramic cartridge
- temperature limitation adjustable
- suitable for continous flow water heaters
- material waste set: metal
- connection type: G ⅜ connections
- connection dimension: DN15



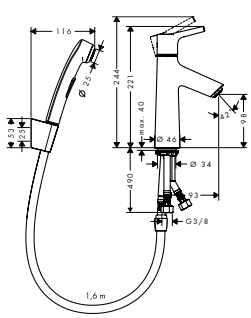

Single lever basin mixer with bidette hand shower and shower hose 160 cm

Chrome — 72290000 — 219.60

AirPower · EcoSmart · Quick Clean

- consists of: single lever basin mixer, bidette hand shower, shower holder, shower hose, waste set
- maximum flow rate at 3 bar: 5,7 l/min
- ceramic cartridge
- temperature limitation adjustable
- suitable for continuous flow water heaters
- push-open waste set G 1¼
- material waste set: synthetic
- connection type: G ⅜ connections
- connection dimension: DN15

Measurements within scale drawings are in mm.

Technical specifications and units of measure are subject to change.

Bath

	finish	code no.	Euro



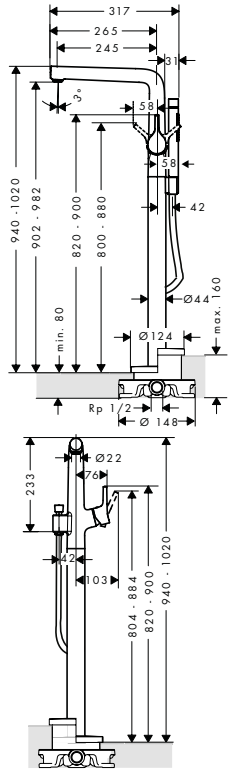

Single lever bath mixer floor-standing

Chrome — 72412000 — 1,618.00

AirPower · Quick Clean

- consists of: single lever bath mixer floor standing, baton hand shower, shower hose, shower holder
- 2 functions
- projection 245 mm
- connection type: basic set
- spray type mixer: normal spray
- spray type hand shower: Rain, MonoRain
- maximum flow rate at 3 bar: 20 l/ min
- ceramic cartridge
- diverter with automatic resetting
- non-return valve
- connection dimension: DN15

Required parts:

- Basic set for mixers floor-standing — 10452180 — 459.80
- Sealing foil for basic set bath mixer floor-standing — 96441000 — 127.30



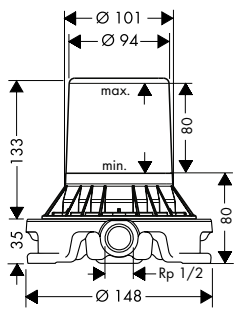

Basic set for mixers floor-standing

10452180 — 459.80

- for mounting on unfinished floor
- suitable for single lever bath mixer, single lever basin mixer and bath spout floor-standing
- connection dimension: DN15

Optional parts:

- Sealing foil for basic set bath mixer floor-standing — 96441000 — 127.30



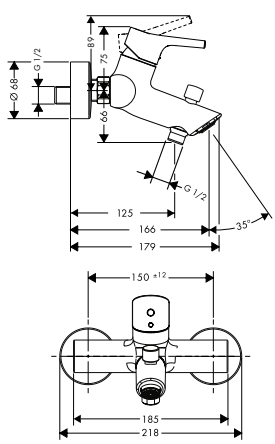

Single lever bath mixer for exposed installation

Chrome — 72400000 — 212.10

AirPower · Quick Clean

- 2 functions
- projection 166 mm
- connection type: s-shaped connections
- centre distance: 150 ± 12 mm
- spray type mixer: normal spray
- flow rate for bath spout at 3 bar: 20 l/ min
- flow rate of hand shower at 3 bar: 14 l/ min
- ceramic cartridge
- temperature limitation adjustable
- diverter with automatic resetting
- protected against backflow, according to DIN EN1717
- with silencer
- suitable for continous flow water heaters
- connection dimension: DN15

Alternative products:

- Single lever bath mixer for exposed installation with centre distance 15.3 cm — Chrome — 72401000 — 231.70

Measurements within scale drawings are in mm.

	finish	code no.	Euro
 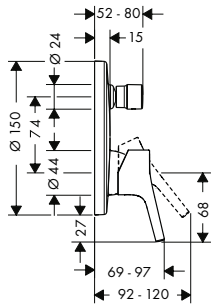			
Single lever bath mixer for concealed installation for iBox universal · 2 functions · connection type: basic set · flow rate upper outlet: 21 l/ min · flow rate lower outlet: 29 l/ min · ceramic cartridge · temperature limitation adjustable · diverter with automatic resetting · with silencer	Chrome	72405000	174.10
Alternative products: · Single lever bath mixer for concealed installation with integrated security combination according to EN1717 for iBox universal	Chrome	72406000	296.70
Required parts: · Basic set iBox universal		01800180	137.30
Optional parts: · Extension element 15 cm	Chrome	13597000	47.80
 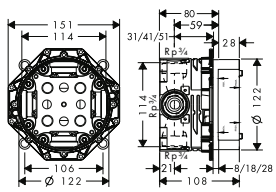			
Basic set iBox universal · suitable for all shower, bath tub and thermostat finish sets for concealed installation · connection thread Rp ¾ · rotationally-symmetric installation · sound-decoupled installation · connection dimension: DN20		01800180	137.30
Alternative products: · Basic set iBox universal with shut-off unit		01850180	178.40
Optional parts: · Extension iBox universal basic set 2.5 cm · Fastening rail set for iBox universal · Assembly aid for iBox universal		13595000 96615000 93500000	50.40 35.80 13.00
 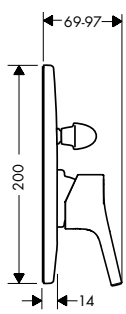			
Single lever bath mixer for concealed installation · 2 functions · connection type: basic set · min. operating pressure: 1 bar · max. operating pressure: 10 bar · ceramic cartridge · temperature limitation adjustable · diverter with automatic resetting	Chrome	72407000	77.20
Required parts: · Basic set for single lever bath mixer for concealed installation		31741180	124.50
 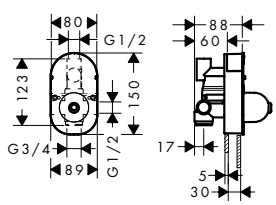			
Basic set for single lever bath mixer for concealed installation · ceramic cartridge · temperature limitation adjustable · installation depth: 55 - 83 mm · connection dimension: DN15		31741180	124.50
Optional parts: · Extension for basic set for single lever bath mixer for concealed installation		32498000	127.30

Measurements within scale drawings are in mm.

Technical specifications and units of measure are subject to change.

	finish	code no.	Euro



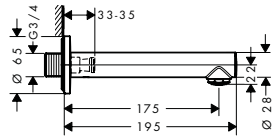

Bath spout

Chrome — 72410000 — 109.20

AirPower — Quick Clean

- 1 function
- connection type: G ¾
- with silencer
- with escutcheon
- projection 175 mm
- wall-mounted
- maximum flow rate at 3 bar: 21,5 l/min
- connection dimension: DN20
- spray type: normal spray



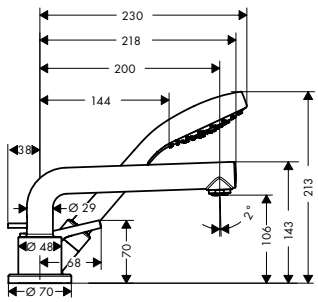

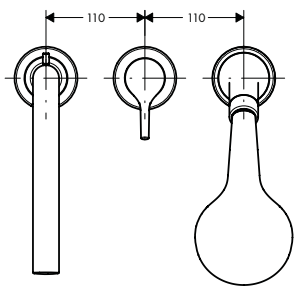

3-hole rim mounted single lever bath mixer for Secuflex

Chrome — 72416000 — 579.70

AirPower — Quick Clean

- consists of: 3-hole rim mounted single lever bath mixer, hand shower, shower holder
- 2 functions
- projection 200 mm
- spray type mixer: normal spray
- spray type hand shower: Rain
- maximum pull-out length of hand shower: 1.10 m
- maximum flow rate at 3 bar: 22 l/min
- ceramic cartridge
- temperature limitation adjustable
- connection dimension: DN15

Consisting of:

- Hand shower 1jet (# 26804400)

Required parts:

- Basic set for 3-hole rim mounted single lever bath mixer — 13437180 — 686.60



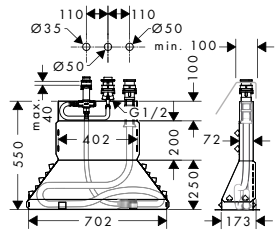

Basic set for 3-hole rim mounted single lever bath mixer

13437180 — 686.60

- consists of: basic set, shower hose, Secubox
- maximum pull-out length of hand shower: 1.10 m
- connection thread: G ½
- connection dimension: DN15

Optional parts:

- Secuflex insert extension — 98806000 — 4.10

Measurements within scale drawings are in mm.

Technical specifications and units of measure are subject to change.

	finish	code no.	Euro



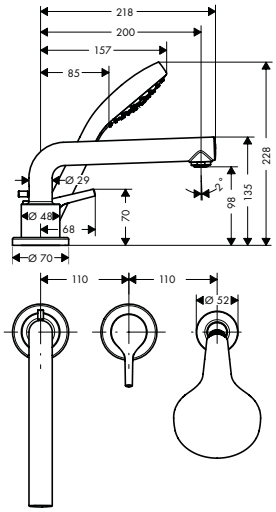

3-hole rim mounted single lever bath mixer

Chrome — 72417000 — 417.90

AirPower · Quick Clean

- consists of: 3-hole rim mounted single lever bath mixer, hand shower, shower holder
- 2 functions
- projection 200 mm
- spray type mixer: normal spray
- spray type hand shower: Rain
- maximum pull-out length of hand shower: 1.60 m
- flow rate for bath spout at 3 bar: 19 l/ min
- flow rate of hand shower at 3 bar: 15 l/ min
- ceramic cartridge
- temperature limitation adjustable
- connection dimension: DN15

Consisting of:
- Hand shower 1jet (# 26804400)

Required parts:
- Basic set for 3-hole rim mounted single lever bath mixer — 13439180 — 350.10

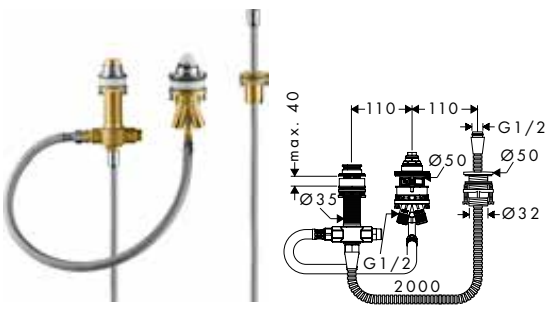

Basic set for 3-hole rim mounted single lever bath mixer

13439180 — 350.10

- consists of: basic set, shower holder, shower hose
- maximum pull-out length of hand shower: 1.60 m
- maintenance opening required
- connection dimension: G ½



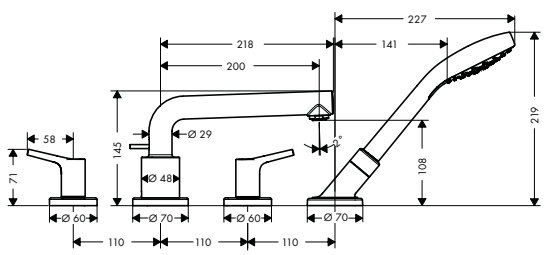

4-hole rim mounted bath mixer for Secuflex

Chrome — 72418000 — 579.70

AirPower · Quick Clean

- consists of: 4-hole rim mounted bath mixer, hand shower, shower holder
- 2 functions
- projection 200 mm
- connection type: basic set
- spray type mixer: normal spray
- spray type hand shower: Rain
- maximum pull-out length of hand shower: 1.10 m
- flow rate for bath spout at 3 bar: 19 l/ min
- flow rate of hand shower at 3 bar: 17 l/ min
- min. operating pressure: 1 bar
- max. operating pressure: 10 bar
- ceramic valves hot/ cold 90°
- non-return valve
- connection dimension: DN15

Consisting of:
- Hand shower 1jet (# 26804400)

Required parts:
- Basic set for 4-hole rim mounted bath mixer — 13444180 — 838.00

Measurements within scale drawings are in mm.

Technical specifications and units of measure are subject to change.

	finish	code no.	Euro
 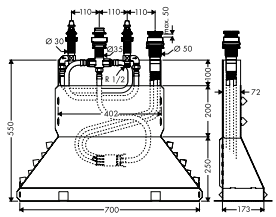 **Basic set for 4-hole rim mounted bath mixer** · consists of: basic set, shower hose, Secubox · maximum pull-out length of hand shower: 1.10 m · connection dimension: DN15 **Optional parts:**		13444180	838.00
· Secuflex insert extension		98806000	4.10
 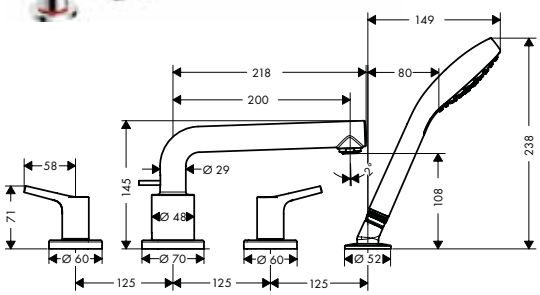 **4-hole rim mounted bath mixer** · consists of: 4-hole rim mounted bath mixer, hand shower, shower holder · 2 functions · projection 200 mm · maximum pull-out length of hand shower: 1.60 m · maximum flow rate at 3 bar: 23,8 l/ min · flow rate for bath spout at 3 bar: 23,8 l/ min · flow rate of hand shower at 3 bar: 16,7 l/ min · min. operating pressure: 1 bar · non-return valve · protected against backflow, according to DIN EN1717 · connection dimension: DN15 **Consisting of:** · Hand shower 1jet (# 26804400) **Required parts:**	Chrome	72419000	417.90
· Basic set for 4-hole rim mounted bath mixer		13244180	289.00
 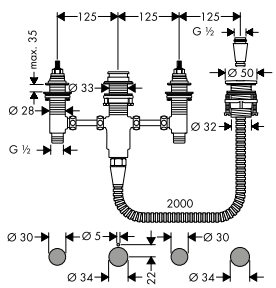 **Basic set for 4-hole rim mounted bath mixer** · consists of: basic set, shower holder, shower hose · maximum pull-out length of hand shower: 1.60 m · maintenance opening required · suitable for 4-hole rim mounted bath mixer · connection thread: G ½ · connection dimension: DN15 · ceramic valves hot/ cold 90°		13244180	289.00

Measurements within scale drawings are in mm.

Technical specifications and units of measure are subject to change.

Shower

	finish	code no.	Euro
 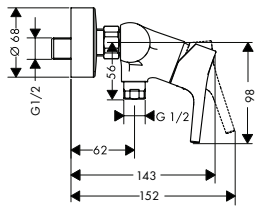 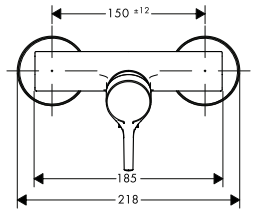 **Single lever shower mixer for exposed installation** · 1 function · connection type: s-shaped connections · centre distance: 150 ± 12 mm · maximum flow rate at 3 bar: 31 l/min · flow rate of hand shower at 3 bar: 14 l/min · ceramic cartridge · min. operating pressure: 1 bar · max. operating pressure: 10 bar · temperature limitation adjustable · non-return valve · with silencer · hose connection DN15 · connection dimension: DN15	Chrome	72600000	168.00
Alternative products: · Single lever shower mixer for exposed installation with centre distance 15.3 cm	Chrome	72601000	180.30
 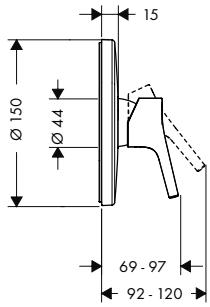 **Single lever shower mixer for concealed installation for iBox universal** · 1 function · connection type: basic set · maximum flow rate at 3 bar: 29,3 l/min · ceramic cartridge · temperature limitation adjustable	Chrome	72605000	154.40
Required parts: · Basic set iBox universal		01800180	137.30
Optional parts: · Extension element 15 cm	Chrome	13597000	47.80
 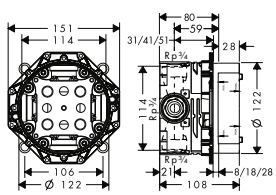 **Basic set iBox universal** · suitable for all shower, bath tub and thermostat finish sets for concealed installation · connection thread Rp ¾ · rotationally-symmetric installation · sound-decoupled installation · connection dimension: DN20		01800180	137.30
Alternative products: · Basic set iBox universal with shut-off unit		01850180	178.40
Optional parts: · Extension iBox universal basic set 2.5 cm · Fastening rail set for iBox universal · Assembly aid for iBox universal		13595000 96615000 93500000	50.40 35.80 13.00
 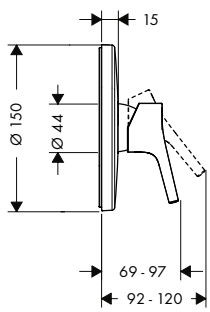 **Single lever shower mixer for concealed installation** · 1 function · connection type: basic set · maximum flow rate at 3 bar: 28 l/min	Chrome	72606000	51.50
Required parts: · Basic set for single lever shower mixer for concealed installation		13620180	110.60

Measurements within scale drawings are in mm.

Technical specifications and units of measure are subject to change.

	finish	code no.	Euro
Basic set for single lever shower mixer for concealed installation · ceramic cartridge · temperature limitation adjustable · installation depth: 55 - 83 mm · connection dimension: DN15		13620180	110.60
Optional parts: · Extension set for basic set for single lever shower mixer for concealed installation		32698000	98.10



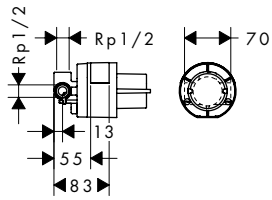

Measurements within scale drawings are in mm.

Technical specifications and units of measure are subject to change.

Basin

	finish	code no.	Euro



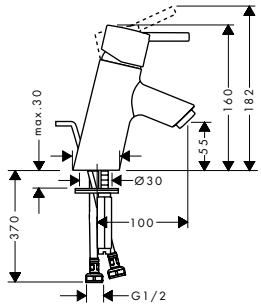

Single lever basin mixer with pop-up waste set

	Chrome	32020000	214.20

AirPower · EcoSmart · Comfort Zone · Quick Clean

- consists of: single lever basin mixer, waste set
- ComfortZone 70
- projection 100 mm
- spray type: normal spray
- maximum flow rate at 3 bar: 5 l/min
- ceramic cartridge
- temperature limitation adjustable
- suitable for continuous flow water heaters
- pop-up waste set G 1¼
- material waste set: metal
- connection type: G ⅜ connections
- connection dimension: DN15

Alternative products:

Single lever basin mixer without waste set	Chrome	32031000	205.10
Single lever basin mixer for vented hot water cylinder with pop-up waste set	Chrome	32032000	277.80



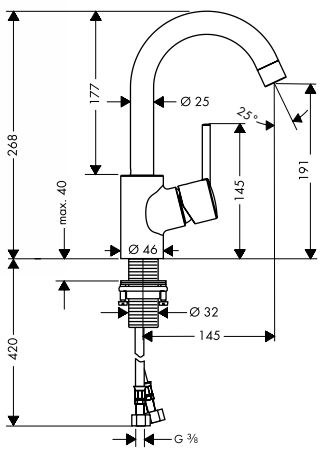

Single lever basin mixer 200 with swivel spout and pop-up waste set

	Chrome	32070000	320.50

AirPower · EcoSmart · Comfort Zone · Quick Clean

- consists of: single lever basin mixer, waste set
- ComfortZone 200
- projection 145 mm
- swivel range 360°
- spray type: normal spray
- maximum flow rate at 3 bar: 5 l/min
- ceramic cartridge
- temperature limitation adjustable
- suitable for continuous flow water heaters
- pop-up waste set G 1¼
- material waste set: metal
- connection type: G ⅜ connections
- connection dimension: DN15
- handle position on the side: bottom-side at the base body (not suitable for wash bowls)



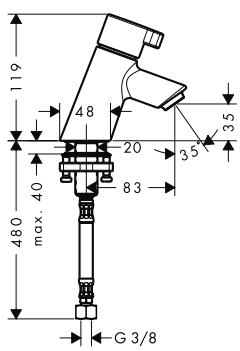

Pillar tap 40 for cold water or pre-adjusted water without waste set

	Chrome	13132000	148.40

AirPower · EcoSmart · Comfort Zone · Quick Clean

- ComfortZone 40
- projection 83 mm
- spray type: normal spray
- maximum flow rate at 3 bar: 5 l/min
- ceramic valves 90°
- for cold water connection
- connection type: G ⅜ connections
- connection dimension: DN15

Measurements within scale drawings are in mm.

Technical specifications and units of measure are subject to change.

Bath

	finish	code no.	Euro
Single lever bath mixer for exposed installation	Chrome	32420000	271.30



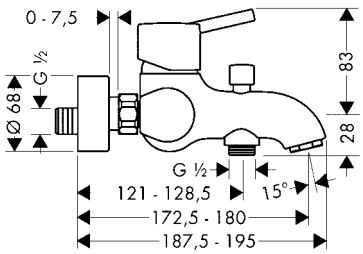

- 2 functions
- projection 172.5 - 180 mm
- connection type: s-shaped connections
- centre distance: 150 ± 12 mm
- spray type mixer: normal spray
- flow rate for bath spout at 3 bar: 18 l/min
- flow rate of hand shower at 3 bar: 19 l/min
- min. operating pressure: 1 bar
- max. operating pressure: 10 bar
- ceramic cartridge
- temperature limitation adjustable
- diverter with automatic resetting
- non-return valve
- with silencer
- suitable for continous flow water heaters
- connection dimension: DN15

	finish	code no.	Euro
Single lever bath mixer for concealed installation for iBox universal	Chrome	32475000	184.50



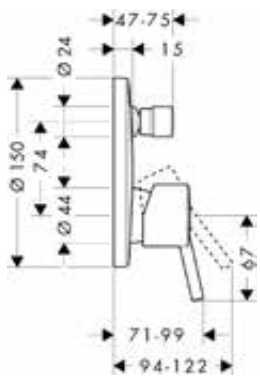

- 2 functions
- connection type: basic set
- flow rate upper outlet: 21 l/min
- flow rate lower outlet: 29 l/min
- maximum flow rate at 3 bar: 29 l/min
- min. operating pressure: 1 bar
- max. operating pressure: 10 bar
- ceramic cartridge
- temperature limitation adjustable
- diverter with automatic resetting
- with silencer

Alternative products:

· Single lever bath mixer for concealed installation with integrated security combination according to EN1717 for iBox universal	Chrome	32477000	328.70

Required parts:

· Basic set iBox universal		01800180	137.30

Optional parts:

· Extension element 15 cm	Chrome	13597000	47.80

Basic set iBox universal		01800180	137.30



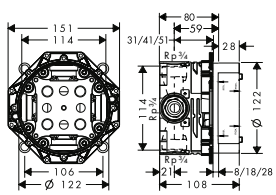

- suitable for all shower, bath tub and thermostat finish sets for concealed installation
- connection thread Rp ¾
- rotationally-symmetric installation
- sound-decoupled installation
- connection dimension: DN20

Alternative products:

· Basic set iBox universal with shut-off unit		01850180	178.40

Optional parts:

· Extension iBox universal basic set 2.5 cm		13595000	50.40
· Fastening rail set for iBox universal		96615000	35.80
· Assembly aid for iBox universal		93500000	13.00

Measurements within scale drawings are in mm.

Technical specifications and units of measure are subject to change.

	finish	code no.	Euro



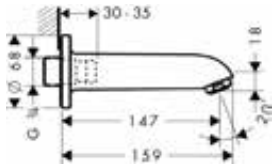

Bath spout

Chrome | 13414000 | 112.70

AirPower | Quick Clean

- 1 function
- with silencer
- with escutcheon
- projection 147 mm
- wall-mounted
- maximum flow rate at 3 bar: 27,5 l/min
- connection dimension: DN20



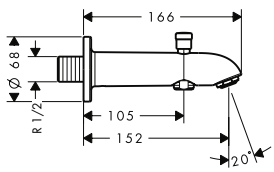

Bath spout 15.2 cm with diverter valve

Chrome | 13423000 | 115.30

AirPower | Quick Clean

- 2 functions
- connection type: G ½
- with automatic resetting
- with escutcheon
- projection 152 mm
- wall-mounted
- maximum flow rate at 3 bar: 25 l/min
- connection dimension: DN15
- protected against backflow, according to DIN EN1717

Alternative sizes:

- Bath spout 22.8 cm with diverter valve — Chrome | 13424000 | 124.80

Shower



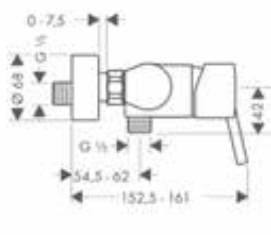

Single lever shower mixer for exposed installation

Chrome | 32620000 | 216.70

- 1 function
- connection type: s-shaped connections
- centre distance: 150 ± 12 mm
- maximum flow rate at 3 bar: 27 l/min
- flow rate of hand shower at 3 bar: 16 l/min
- ceramic cartridge
- min. operating pressure: 1 bar
- max. operating pressure: 10 bar
- temperature limitation adjustable
- non-return valve
- with silencer
- hose connection DN15
- connection dimension: DN15



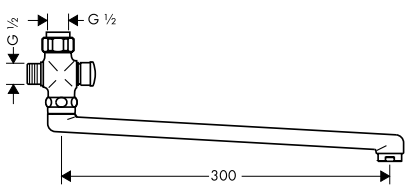

Long swivel spout 30 cm

Chrome | 14495000 | 101.40

- with automatic resetting
- length 300 mm
- for installation on single lever shower mixer
- connection dimension DN15

Measurements within scale drawings are in mm.

Technical specifications and units of measure are subject to change.

	finish	code no.	Euro
 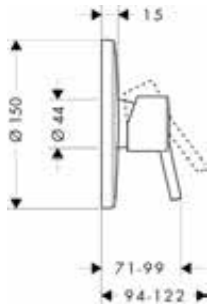 **Single lever shower mixer for concealed installation for iBox universal** · 1 function · connection type: basic set · maximum flow rate at 3 bar: 29,3 l/min · ceramic cartridge · min. operating pressure: 1 bar · max. operating pressure: 10 bar · temperature limitation adjustable	Chrome	32675000	172.00
Required parts:			
· Basic set iBox universal		01800180	137.30
Optional parts:			
· Extension element 15 cm	Chrome	13597000	47.80
 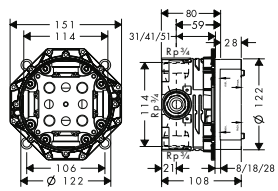 **Basic set iBox universal** · suitable for all shower, bath tub and thermostat finish sets for concealed installation · connection thread Rp ¾ · rotationally-symmetric installation · sound-decoupled installation · connection dimension: DN20		01800180	137.30
Alternative products:			
· Basic set iBox universal with shut-off unit		01850180	178.40
Optional parts:			
· Extension iBox universal basic set 2.5 cm		13595000	50.40
· Fastening rail set for iBox universal		96615000	35.80
· Assembly aid for iBox universal		93500000	13.00

Measurements within scale drawings are in mm.

Focus®



Basin	page 452		Focus Care	page 453	
Bidet	page 457		Bath	page 459	
Shower	page 462				

Basin

	finish	code no.	Euro



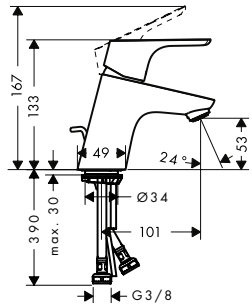

Single lever basin mixer 70 with pop-up waste set

Chrome — 31730000 — 112.70

AirPower · EcoSmart · Comfort Zone · Quick Clean

- consists of: single lever basin mixer, waste set
- ComfortZone 70
- projection 101 mm
- spray type: normal spray
- maximum flow rate at 3 bar: 5 l/min
- ceramic cartridge
- temperature limitation adjustable
- suitable for continuous flow water heaters
- pop-up waste set G 1¼
- material waste set: metal
- connection type: G ⅜ connections
- connection dimension: DN15

Alternative products:

· Single lever basin mixer 70 with push-open waste set	Chrome	31604000	112.70
· Single lever basin mixer 70 with chain	Chrome	31732000	104.90
· Single lever basin mixer 70 without waste set	Chrome	31733000	104.90
· Single lever basin mixer 70 for vented hot water cylinders with pop-up waste set	Chrome	31132000	180.20
· Single lever basin mixer 70 LowFlow without waste set	Chrome	31952000	101.00
· Single lever basin mixer 70 CoolStart with pop-up waste set	Chrome	31539000	112.70



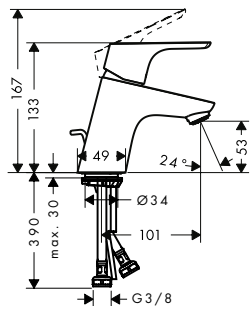

Single lever basin mixer 70 CoolStart with pop-up waste set

Chrome — 31539000 — 112.70

AirPower · EcoSmart · Comfort Zone · Quick Clean · CoolStart

- consists of: single lever basin mixer, waste set
- ComfortZone 70
- projection 101 mm
- spray type: normal spray
- maximum flow rate at 3 bar: 5 l/min
- ceramic cartridge
- temperature limitation adjustable
- suitable for continuous flow water heaters
- pop-up waste set G 1¼
- material waste set: metal
- connection type: G ⅜ connections
- connection dimension: DN15
- cold water in middle position

Alternative products:

· Single lever basin mixer 70 with pop-up waste set	Chrome	31730000	112.70

Measurements within scale drawings are in mm.

Technical specifications and units of measure are subject to change.

	finish	code no.	Euro



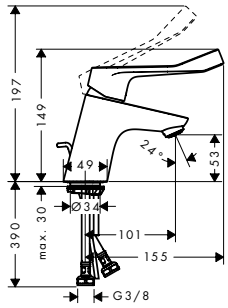

Single lever basin mixer 70 with extra long handle 12,1 cm and pop-up waste set

Chrome 31910000 123.70

EcoSmart Comfort Zone

- consists of: single lever basin mixer, waste set
- ComfortZone 70
- larger print for greater clarity
- with extra long barrier-free handle
- projection 101 mm
- spray type: laminar spray
- maximum flow rate at 3 bar: 5 l/min
- ceramic cartridge
- temperature limitation adjustable
- suitable for continuous flow water heaters
- pop-up waste set G 1¼
- material waste set: metal
- connection type: G ⅜ connections
- connection dimension: DN15

Alternative products:

- Single lever basin mixer 70 with extra long handle without waste set — Chrome 31914000 117.40



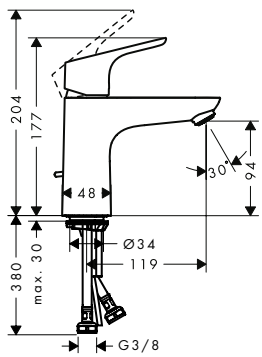

Single lever basin mixer 100 with pop-up waste set

Chrome 31607000 138.60

AirPower EcoSmart Comfort Zone Quick Clean

- consists of: single lever basin mixer, waste set
- ComfortZone 100
- projection 119 mm
- spray type: normal spray
- maximum flow rate at 3 bar: 5 l/min
- ceramic cartridge
- temperature limitation adjustable
- suitable for continuous flow water heaters
- pop-up waste set G 1¼
- material waste set: metal
- connection type: G ⅜ connections
- connection dimension: DN15

Alternative products:

- Single lever basin mixer 100 without waste set — Chrome 31517000 131.70
- Single lever basin mixer 100 LowFlow with pop-up waste set — Chrome 31603000 133.40
- Single lever basin mixer 100 LowFlow without waste set — Chrome 31513000 126.90



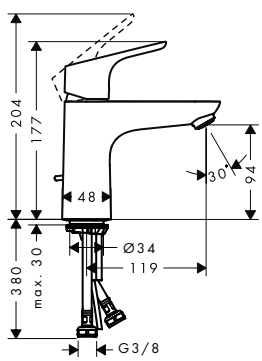

Single lever basin mixer 100 CoolStart with pop-up waste set

Chrome 31621000 138.60

AirPower EcoSmart Comfort Zone Quick Clean CoolStart

- consists of: single lever basin mixer, waste set
- ComfortZone 100
- projection 119 mm
- spray type: normal spray
- maximum flow rate at 3 bar: 5 l/min
- ceramic cartridge
- temperature limitation adjustable
- suitable for continuous flow water heaters
- pop-up waste set G 1¼
- material waste set: metal
- connection type: G ⅜ connections
- connection dimension: DN15
- cold water in middle position

Alternative products:

- Single lever basin mixer 100 CoolStart without waste set — Chrome 31509000 131.70

Measurements within scale drawings are in mm.

	finish	code no.	Euro



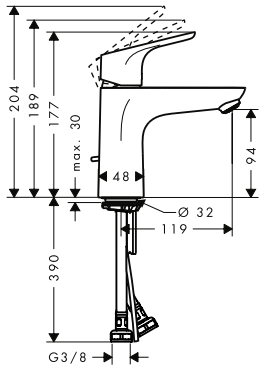

Single lever basin mixer 100 with 2 flow rates with pop-up waste set

Chrome — 31657000 — 138.60

AirPower · EcoSmart · Comfort Zone · Quick Clean · CoolStart

- consists of: single lever basin mixer, waste set
- ComfortZone 100
- projection 119 mm
- spray type: normal spray
- maximum flow rate at 3 bar: 5 l/min
- ceramic cartridge with Eco handle position for 2 flow rates
- temperature limitation adjustable
- suitable for continuous flow water heaters
- pop-up waste set G 1¼
- material waste set: metal
- connection type: G ⅜ connections
- connection dimension: DN15
- cold water in middle position



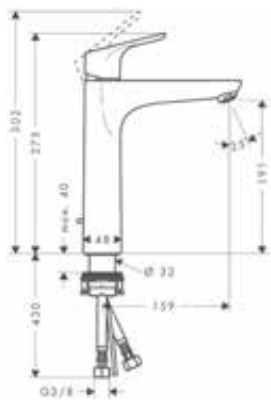

Single lever basin mixer 190 with pop-up waste set

Chrome — 31608000 — 166.30

AirPower · EcoSmart · Comfort Zone · Quick Clean

- consists of: single lever basin mixer, waste set
- ComfortZone 190
- projection 159 mm
- spray type: normal spray
- maximum flow rate at 3 bar: 5 l/min
- ceramic cartridge
- temperature limitation adjustable
- suitable for continuous flow water heaters
- pop-up waste set G 1¼
- material waste set: metal
- connection type: G ⅜ connections
- connection dimension: DN15

Alternative products:

- Single lever basin mixer 190 without waste set — Chrome — 31518000 — 159.50



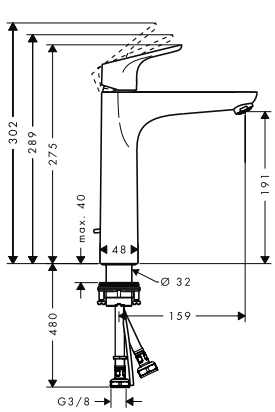

Single lever basin mixer 190 with 2 flow rates with pop-up waste set

Chrome — 31658000 — 166.30

AirPower · EcoSmart · Comfort Zone · Quick Clean

- consists of: single lever basin mixer, waste set
- ComfortZone 190
- projection 159 mm
- spray type: normal spray
- maximum flow rate at 3 bar: 5 l/min
- ceramic cartridge with Eco handle position for 2 flow rates
- temperature limitation adjustable
- suitable for continuous flow water heaters
- pop-up waste set G 1¼
- material waste set: metal
- connection type: G ⅜ connections
- connection dimension: DN15

Measurements within scale drawings are in mm.

Technical specifications and units of measure are subject to change.

	finish	code no.	Euro
Single lever basin mixer 230 with pop-up waste set	Chrome	31531000	197.90



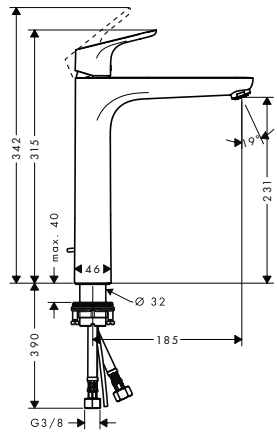

- consists of: single lever basin mixer, waste set
- ComfortZone 230
- projection 185 mm
- spray type: normal spray
- maximum flow rate at 3 bar: 5 l/min
- ceramic cartridge
- temperature limitation adjustable
- suitable for continuous flow water heaters
- pop-up waste set G 1¼
- material waste set: metal
- connection type: G ⅜ connections
- connection dimension: DN15

Alternative products:

· Single lever basin mixer 230 without waste set	Chrome	31532000	192.20

Single lever basin mixer 240 with swivel spout and pop-up waste set	Chrome	31609000	201.00



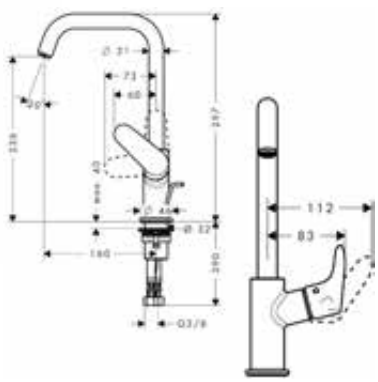

- consists of: single lever basin mixer, waste set
- ComfortZone 240
- projection 160 mm
- swivel range 120°
- spray type: normal spray
- maximum flow rate at 3 bar: 5 l/min
- ceramic cartridge
- temperature limitation adjustable
- suitable for continuous flow water heaters
- pop-up waste set G 1¼
- material waste set: metal
- connection type: G ⅜ connections
- connection dimension: DN15
- handle position on the side: bottom-side at the base body (not suitable for wash bowls)

Alternative products:

· Single lever basin mixer 240 with swivel spout without waste set	Chrome	31519000	194.10

Single lever basin mixer for exposed installation wall-mounted	Chrome	31923000	143.90



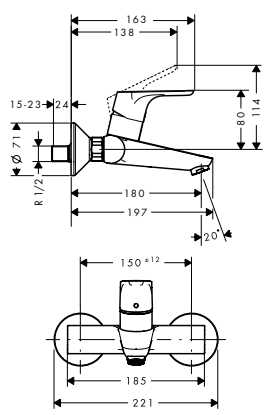

- projection 180 mm
- centre distance: 150 ± 12 mm
- spray type: normal spray
- maximum flow rate at 3 bar: 5 l/min
- ceramic cartridge
- temperature limitation adjustable
- with noise reduction
- suitable for continuous flow water heaters
- connection type: s-shaped connections
- connection dimension: DN15

Measurements within scale drawings are in mm.

Technical specifications and units of measure are subject to change.

	finish	code no.	Euro



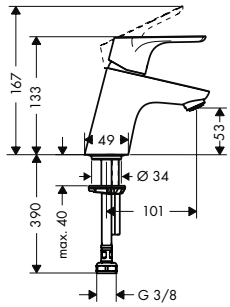

Pillar tap 70
for cold water
or pre-adjusted water
without waste set

Chrome 31130000 103.90

AirPower EcoSmart Comfort Zone Quick Clean

- ComfortZone 70
- projection 101 mm
- spray type: normal spray
- maximum flow rate at 3 bar: 5 l/min
- ceramic cartridge
- for cold water connection
- connection type: G ⅜ connections
- connection dimension: DN15



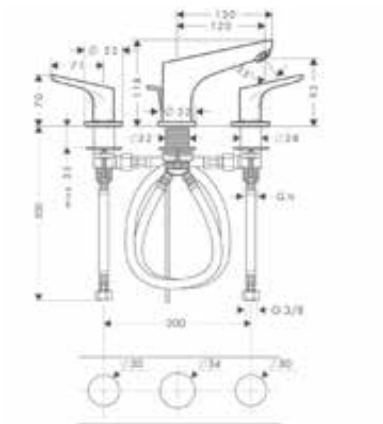

3-hole basin mixer 100
with pop-up waste set

Chrome 31937000 263.80

AirPower EcoSmart Comfort Zone Quick Clean

- consists of: 3-hole basin mixer, waste set
- ComfortZone 100
- maximum flow rate at 3 bar: 5 l/min
- ceramic valves hot/ cold 90°
- suitable for continuous flow water heaters
- pop-up waste set G 1¼
- material waste set: metal
- connection type: G ⅜ connections
- connection dimension: DN15

Measurements within scale drawings are in mm.

Technical specifications and units of measure are subject to change.

	finish	code no.	Euro



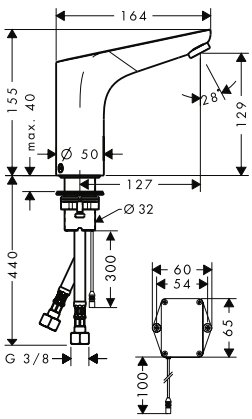

Electronic basin mixer 130 with temperature control battery operation

Chrome — 31171000 — 505.70

Sensor Activation · AirPower · EcoSmart · Comfort Zone

- ComfortZone 130
- projection 127 mm
- spray type: normal spray
- maximum flow rate at 3 bar: 5 l/min
- temperature limitation adjustable
- temperature adjustable via mixer lever on the side
- non-return valve
- suitable for continous flow water heaters
- infrared sensor technology
- automatic environmental adjustment of infrared sensor
- adjustable optical range of infrared sensor (2 settings)
- battery condition indicator available
- battery operation 6V (lifetime approx. 2 years, battery included in scope of supply)
- flushing time: 10 s
- hygiene rinse activatable (automatic water flow)
- frequency of hygiene rinse: 24 h
- flushing time hygiene rinse: 10 s
- permanent rinse activatable (single water flow for 180 seconds, suitable for thermal disinfection)
- cleaning mode: manual water stop for washbasin cleaning
- connection dimension: DN15
- TÜV certified
- dirt filters in the connection hoses

Alternative products:

· Electronic basin mixer with temperature pre-adjustment battery operation	Chrome	31172000	459.10
· Electronic basin mixer 130 with temperature control mains connection 230 V	Chrome	31173000	529.30
· Electronic basin mixer with temperature pre-adjustment mains connection 230 V	Chrome	31174000	506.40

Bidet



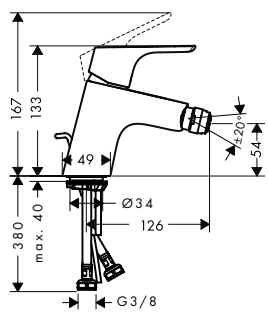

Single lever bidet mixer with pop-up waste set

Chrome — 31920000 — 112.70

AirPower · Quick Clean

- consists of: single lever bidet mixer, waste set
- projection 126 mm
- aerator with ball pivot
- spray type: normal spray
- maximum flow rate at 3 bar: 7,2 l/min
- ceramic cartridge
- temperature limitation adjustable
- suitable for continous flow water heaters
- material waste set: metal
- connection type: G ⅜ connections
- connection dimension: DN15

Alternative products:

· Single lever bidet mixer with push-open waste set	Chrome	31922000	112.70

Measurements within scale drawings are in mm.

	finish	code no.	Euro



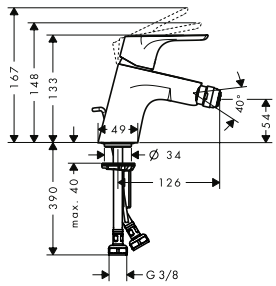

Single lever bidet mixer with 2 flow rates with pop-up waste set

Chrome | 31928000 | 112.70

AirPower | Quick Clean

- consists of: single lever bidet mixer, waste set
- projection 126 mm
- aerator with ball pivot
- spray type: normal spray
- ceramic cartridge with Eco handle position for 2 flow rates
- temperature limitation adjustable
- suitable for continous flow water heaters
- material waste set: metal
- connection type: G ⅜ connections
- connection dimension: DN15



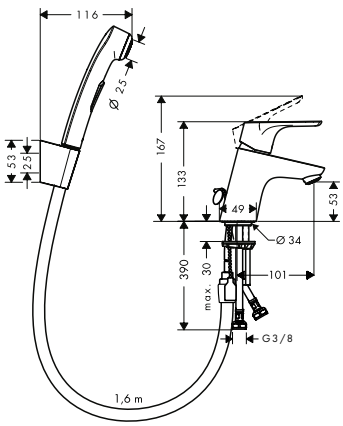

Single lever basin mixer 70 with bidette hand shower and shower hose 160 cm

Chrome | 31926000 | 131.40

AirPower | EcoSmart | Quick Clean

- consists of: single lever basin mixer, bidette hand shower, shower holder, shower hose
- maximum flow rate at 3 bar: 5 l/min
- ceramic cartridge
- temperature limitation adjustable
- suitable for continuous flow water heaters
- connection type: G ⅜ connections
- connection dimension: DN15



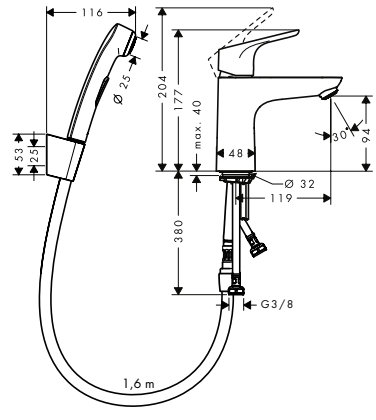

Single lever basin mixer 100 with bidette hand shower and shower hose 160 cm

Chrome | 31927000 | 158.10

AirPower | EcoSmart | Quick Clean

- consists of: single lever basin mixer, bidette hand shower, shower holder, shower hose, waste set
- projection 119 mm
- spray type: normal spray
- spray type Bidette: shower spray
- maximum flow rate at 3 bar: 5 l/min
- ceramic cartridge
- temperature limitation adjustable
- suitable for continuous flow water heaters
- push-open waste set G 1¼
- connection type: G ⅜ connections
- connection dimension: DN15

Measurements within scale drawings are in mm.

Technical specifications and units of measure are subject to change.

Bath

	finish	code no.	Euro
 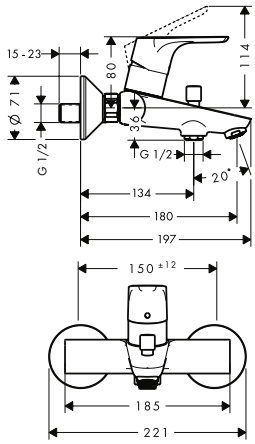			
Single lever bath mixer for exposed installation · 2 functions · projection 180 mm · connection type: s-shaped connections · centre distance: 150 ± 12 mm · spray type mixer: normal spray · maximum flow rate at 3 bar: 19,8 l/min · flow rate for bath spout at 3 bar: 19,8 l/min · flow rate of hand shower at 3 bar: 15,4 l/min · min. operating pressure: 1 bar · max. operating pressure: 10 bar · ceramic cartridge · temperature limitation adjustable · diverter with automatic resetting · protected against backflow, according to DIN EN1717 · with silencer · suitable for continous flow water heaters · connection dimension: DN15	Chrome	31940000	138.60
Alternative products:			
· Single lever bath mixer for exposed installation with 2 flow rates	Chrome	31948000	138.60
 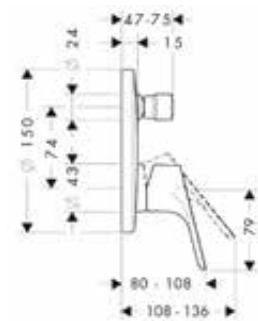			
Single lever bath mixer for concealed installation for iBox universal · 2 functions · connection type: basic set · flow rate upper outlet: 21 l/min · flow rate lower outlet: 29 l/min · min. operating pressure: 1 bar · max. operating pressure: 10 bar · ceramic cartridge · temperature limitation adjustable · diverter with automatic resetting · with silencer	Chrome	31945000	140.40
Alternative products:			
· Single lever bath mixer for concealed installation with integrated security combination according to EN1717 for iBox universal	Chrome	31946000	214.60
Required parts:			
· Basic set iBox universal		01800180	137.30
Optional parts:			
· Extension element 15 cm	Chrome	13597000	47.80

Measurements within scale drawings are in mm.

Technical specifications and units of measure are subject to change.

	finish	code no.	Euro
 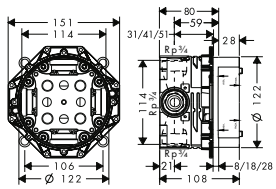			
Basic set iBox universal · suitable for all shower, bath tub and thermostat finish sets for concealed installation · connection thread Rp ¾ · rotationally-symmetric installation · sound-decoupled installation · connection dimension: DN20		01800180	137.30
Alternative products:			
· Basic set iBox universal with shut-off unit		01850180	178.40
Optional parts:			
· Extension iBox universal basic set 2.5 cm		13595000	50.40
· Fastening rail set for iBox universal		96615000	35.80
· Assembly aid for iBox universal		93500000	13.00
 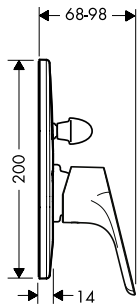			
Single lever bath mixer for concealed installation · 2 functions · connection type: basic set · min. operating pressure: 1 bar · max. operating pressure: 10 bar · ceramic cartridge · temperature limitation adjustable · diverter with automatic resetting	Chrome	31947000	51.40
Required parts:			
· Basic set for single lever bath mixer for concealed installation		31741180	124.50
 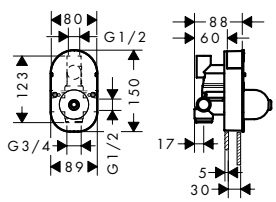			
Basic set for single lever bath mixer for concealed installation · ceramic cartridge · temperature limitation adjustable · installation depth: 55 - 83 mm · connection dimension: DN15		31741180	124.50
Optional parts:			
· Extension for basic set for single lever bath mixer for concealed installation		32498000	127.30
 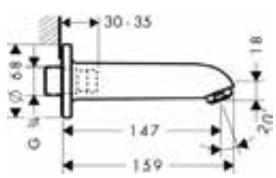			
Bath spout · 1 function · with silencer · with escutcheon · projection 147 mm · wall-mounted · maximum flow rate at 3 bar: 27,5 l/min · connection dimension: DN20	Chrome	13414000	112.70

Measurements within scale drawings are in mm.

Technical specifications and units of measure are subject to change.

	finish	code no.	Euro
Bath spout 15.2 cm with diverter valve · 2 functions · connection type: G ½ · with automatic resetting · with escutcheon · projection 152 mm · wall-mounted · maximum flow rate at 3 bar: 25 l/min · connection dimension: DN15 · protected against backflow, according to DIN EN1717	Chrome	13423000	115.30
Alternative sizes: · Bath spout 22.8 cm with diverter valve	Chrome	13424000	124.80



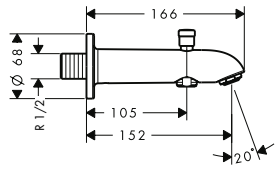

	finish	code no.	Euro
Single lever bath and shower mixer Monotrou · 2 functions · projection 130 mm · connection type: G ⅜ connections · spray type mixer: normal spray · maximum flow rate at 3 bar: 20 l/min · min. operating pressure: 1 bar · max. operating pressure: 10 bar · ceramic cartridge · temperature limitation adjustable · diverter with automatic resetting · protected against backflow, according to DIN EN1717 · suitable for continous flow water heaters · connection dimension: DN15	Chrome	31930000	146.30
Alternative products: · Single lever bath and shower mixer Monotrou with 2 flow rates	Chrome	31938000	146.30



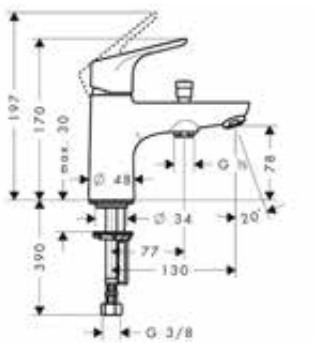

	finish	code no.	Euro
Single lever bath mixer Monotrou · 1 function · projection 130 mm · connection type: G ⅜ connections · spray type mixer: normal spray · maximum flow rate at 3 bar: 20 l/min · min. operating pressure: 1 bar · max. operating pressure: 10 bar · ceramic cartridge · temperature limitation adjustable · suitable for continous flow water heaters · connection dimension: DN15	Chrome	31931000	136.70



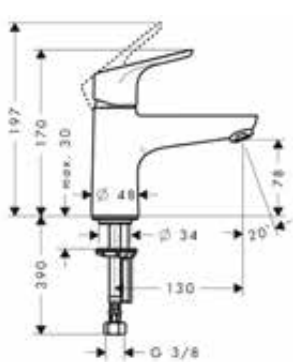

Measurements within scale drawings are in mm.

	finish	code no.	Euro



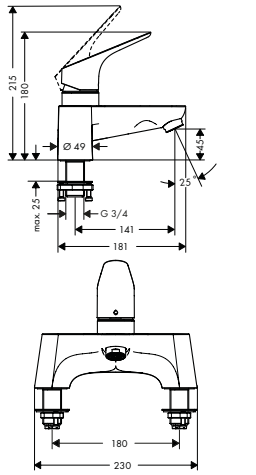

2-hole rim mounted bath mixer

Chrome | 31523000 | 268.20

AirPower

- 1 function
- connection type: G ¾
- centre distance: 180 mm
- ceramic cartridge (Highflow)
- operating pressure from 0.2 bar
- with silencer
- connection dimension: DN15



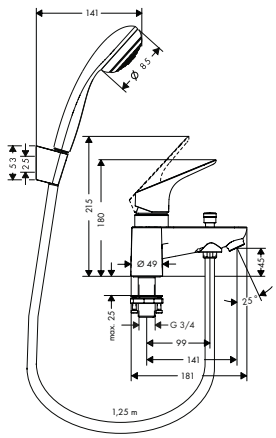

2-hole rim mounted bath mixer with diverter valve and Crometta 85 hand shower 1jet

Chrome | 31521000 | 318.40

AirPower

- consists of: 2-hole rim mounted bath mixer, hand shower, shower holder, shower hose
- 2 functions
- connection type: G ¾
- centre distance: 180 mm
- ceramic cartridge (Highflow)
- operating pressure from 0.2 bar
- diverter with automatic resetting
- non-return valve
- with silencer
- connection dimension: DN15

Consisting of:

- Hand shower Mono (# 28585000)
- Shower holder Porter S (# 28331000)
- Shower hose 160 cm (# 28276000)

Shower



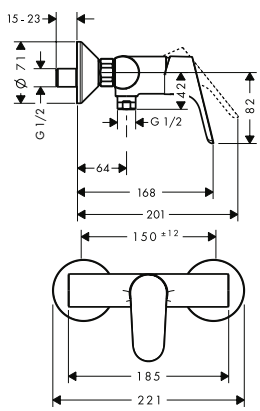

Single lever shower mixer for exposed installation

Chrome | 31960000 | 116.10

- 1 function
- connection type: s-shaped connections
- centre distance: 150 ± 12 mm
- maximum flow rate at 3 bar: 15 l/min
- flow rate of hand shower at 3 bar: 15 l/min
- ceramic cartridge
- min. operating pressure: 1 bar
- max. operating pressure: 10 bar
- temperature limitation adjustable
- non-return valve
- with silencer
- hose connection DN15
- connection dimension: DN15

Alternative products:

- Single lever shower mixer for exposed installation with 2 flow rates — Chrome | 31968000 | 116.10

Measurements within scale drawings are in mm.

Technical specifications and units of measure are subject to change.

	finish	code no.	Euro
 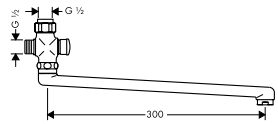			
Long swivel spout 30 cm · with automatic resetting · length 300 mm · for installation on single lever shower mixer · connection dimension DN15	Chrome	14495000	101.40
 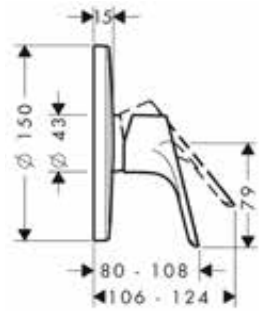			
Single lever shower mixer for concealed installation for iBox universal · 1 function · connection type: basic set · maximum flow rate at 3 bar: 29,3 l/min · ceramic cartridge · min. operating pressure: 1 bar · max. operating pressure: 10 bar · temperature limitation adjustable	Chrome	31965000	132.00
Alternative products: · Single lever shower mixer HighFlow for concealed installation for iBox universal	Chrome	31964000	132.00
Required parts: · Basic set iBox universal		01800180	137.30
Optional parts: · Extension element 15 cm	Chrome	13597000	47.80
 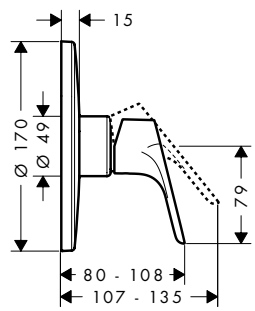			
Single lever shower mixer HighFlow for concealed installation for iBox universal · 1 function · connection type: basic set · maximum flow rate at 3 bar: 49 l/min · ceramic cartridge (Highflow) · temperature limitation adjustable · connection dimension: DN15	Chrome	31964000	132.00
Alternative products: · Single lever shower mixer for concealed installation for iBox universal	Chrome	31965000	132.00
Required parts: · Basic set iBox universal with shut-off unit · Basic set iBox universal		01850180 01800180	178.40 137.30
Optional parts: · Basic set for Trio diverter valve for concealed installation		15984180	160.90

Measurements within scale drawings are in mm.

	finish	code no.	Euro
Basic set iBox universal · suitable for all shower, bath tub and thermostat finish sets for concealed installation · connection thread Rp ¾ · rotationally-symmetric installation · sound-decoupled installation · connection dimension: DN20		01800180	137.30
Alternative products:			
· Basic set iBox universal with shut-off unit		01850180	178.40
Optional parts:			
· Extension iBox universal basic set 2.5 cm		13595000	50.40
· Fastening rail set for iBox universal		96615000	35.80
· Assembly aid for iBox universal		93500000	13.00
Single lever shower mixer for concealed installation · 1 function · connection type: basic set · maximum flow rate at 3 bar: 28,7 l/min · min. operating pressure: 1 bar · max. operating pressure: 10 bar	Chrome	31961000	43.80
Required parts:			
· Basic set for single lever shower mixer for concealed installation		13620180	110.60
Single lever shower mixer for concealed installation · 1 function · connection type: basic set · maximum flow rate at 3 bar: 29 l/min · min. operating pressure: 1 bar · max. operating pressure: 10 bar	Chrome	31967000	43.80
Required parts:			
· Basic set for single lever shower mixer for concealed installation		13620180	110.60
Basic set for single lever shower mixer for concealed installation · ceramic cartridge · temperature limitation adjustable · installation depth: 55 - 83 mm · connection dimension: DN15		13620180	110.60
Optional parts:			
· Extension set for basic set for single lever shower mixer for concealed installation		32698000	98.10

Measurements within scale drawings are in mm.

Technical specifications and units of measure are subject to change.

Vernis®



Vernis Blend page 466



Vernis Shape page 479



For matching Vernis products please refer to:

Hand showers	Vernis Blend Hand showers	page 104
Shower sets / Shower bars / Shower holder	Vernis Blend Shower sets	page 138
	Vernis Blend Shower holder sets	page 162
Overhead showers	Vernis Blend Overhead showers Vernis Shape Overhead showers	page 213 page 214
Showerpipes	Vernis Blend Showerpipes Vernis Shape Showerpipes	page 272 page 276
Kitchen mixers	Vernis Blend Kitchen mixers Vernis Shape Kitchen mixers	page 670 page 671

Basin

		finish	code no.	Euro
NEW	**Single lever basin mixer 70 with pop-up waste set** · consists of: single lever basin mixer, waste set · ComfortZone 70 · projection 89 mm · spray type: normal spray · swiveling spray former · maximum flow rate at 3 bar: 5 l/min · ceramic cartridge · temperature limitation adjustable · suitable for continuous flow water heaters · pop-up waste set G 1¼ · material waste set: synthetic · connection type: G ⅜ connections · connection dimension: DN15	Chrome Matt Black	71550000 71550670	67.10 93.90
	Alternative products:			
NEW	· Single lever basin mixer 70 with metal pop-up waste set	Chrome	71557000	77.10
NEW	· Single lever basin mixer 70 without waste set	Chrome Matt Black	71558000 71558670	60.10 84.10
NEW	· Single lever basin mixer 70 CoolStart with pop-up waste set	Chrome Matt Black	71584000 71584670	67.10 93.90
NEW	**Single lever basin mixer 70 with pop-up waste set project pack (6 pcs.)** · consists of: single lever basin mixer, waste set · ComfortZone 70 · projection 89 mm · spray type: normal spray · swiveling spray former · maximum flow rate at 3 bar: 5 l/min · ceramic cartridge · temperature limitation adjustable · suitable for continuous flow water heaters · pop-up waste set G 1¼ · material waste set: synthetic · connection type: G ⅜ connections · connection dimension: DN15 · packaging unit: 6 pieces	Chrome	71587000	395.00
NEW	**Single lever basin mixer 100 with pop-up waste set** · consists of: single lever basin mixer, waste set · ComfortZone 100 · projection 108 mm · spray type: normal spray · swiveling spray former · maximum flow rate at 3 bar: 5 l/min · ceramic cartridge · temperature limitation adjustable · suitable for continuous flow water heaters · pop-up waste set G 1¼ · material waste set: synthetic · connection type: G ⅜ connections · connection dimension: DN15	Chrome Matt Black	71551000 71551670	87.70 121.90
	Alternative products:			
NEW	· Single lever basin mixer 100 with metal pop-up waste set	Chrome	71559000	97.70
NEW	· Single lever basin mixer 100 without waste set	Chrome Matt Black	71580000 71580670	80.70 113.00
NEW	· Single lever basin mixer 100 CoolStart with pop-up waste set	Chrome Matt Black	71585000 71585670	87.70 121.90

Measurements within scale drawings are in mm.

Technical specifications and units of measure are subject to change.

	finish	code no.	Euro

NEW

6x



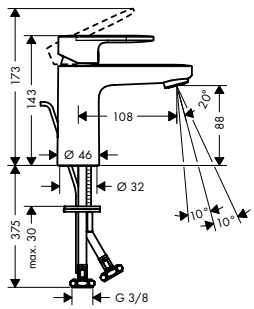

Single lever basin mixer 100 with pop-up waste set project pack (6 pcs.)

Chrome 71588000 512.00

AirPower EcoSmart Comfort Zone

- consists of: single lever basin mixer, waste set
- ComfortZone 100
- projection 108 mm
- spray type: normal spray
- swiveling spray former
- maximum flow rate at 3 bar: 5 l/ min
- ceramic cartridge
- temperature limitation adjustable
- suitable for continuous flow water heaters
- pop-up waste set G 1¼
- material waste set: synthetic
- connection type: G ⅜ connections
- connection dimension: DN15
- packaging unit: 6 pieces

NEW

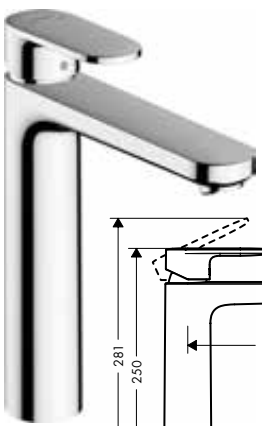

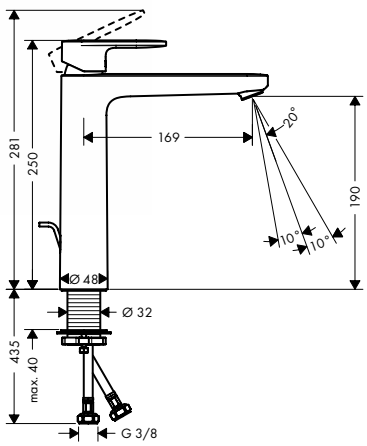

Single lever basin mixer 190 with pop-up waste set

Chrome 71552000 115.00
Matt Black 71552670 161.00

AirPower EcoSmart Comfort Zone

- consists of: single lever basin mixer, waste set
- ComfortZone 190
- projection 169 mm
- spray type: normal spray
- swiveling spray former
- maximum flow rate at 3 bar: 5 l/ min
- ceramic cartridge
- temperature limitation adjustable
- suitable for continuous flow water heaters
- pop-up waste set G 1¼
- material waste set: synthetic
- connection type: G ⅜ connections
- connection dimension: DN15

Alternative products:

NEW · Single lever basin mixer 190 with metal pop-up waste set — Chrome 71581000 125.00

NEW · Single lever basin mixer 190 without waste set — Chrome 71582000 108.00; Matt Black 71582670 151.20

NEW



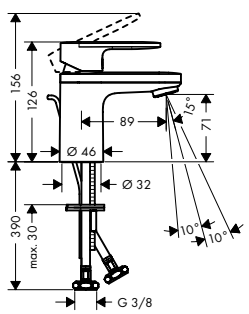

Single lever basin mixer 70 with isolated water conduction and pop-up waste set

Chrome 71570000 67.10

AirPower EcoSmart Comfort Zone

- consists of: single lever basin mixer, waste set
- ComfortZone 70
- projection 89 mm
- spray type: normal spray
- swiveling spray former
- maximum flow rate at 3 bar: 5 l/ min
- ceramic cartridge
- temperature limitation adjustable
- with isolated water conduction - without contact with nickel and lead
- suitable for continuous flow water heaters
- pop-up waste set G 1¼
- material waste set: synthetic
- connection type: G ⅜ connections
- connection dimension: DN15

Measurements within scale drawings are in mm.

	finish	code no.	Euro

NEW



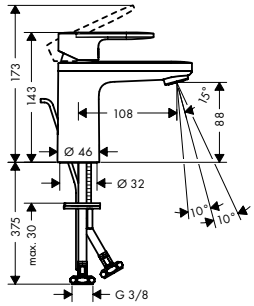

Single lever basin mixer 100 with isolated water conduction and pop-up waste set

Chrome — 71571000 — 87.70

AirPower EcoSmart Comfort Zone

- consists of: single lever basin mixer, waste set
- ComfortZone 100
- projection 108 mm
- spray type: normal spray
- swiveling spray former
- maximum flow rate at 3 bar: 5 l/min
- ceramic cartridge
- temperature limitation adjustable
- with isolated water conduction - without contact with nickel and lead
- suitable for continuous flow water heaters
- pop-up waste set G 1¼
- material waste set: synthetic
- connection type: G ⅜ connections
- connection dimension: DN15

NEW



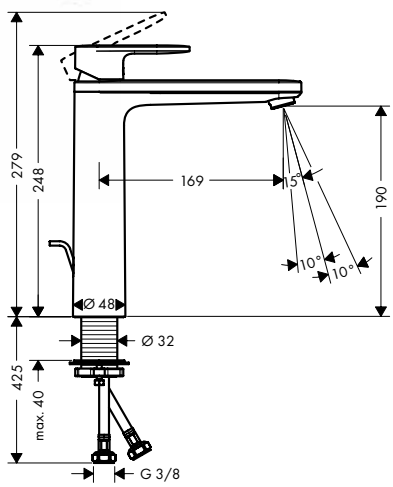

Single lever basin mixer 190 with isolated water conduction and pop-up waste set

Chrome — 71572000 — 115.00

AirPower EcoSmart Comfort Zone

- consists of: single lever basin mixer, waste set
- ComfortZone 190
- projection 169 mm
- spray type: normal spray
- swiveling spray former
- maximum flow rate at 3 bar: 5 l/min
- ceramic cartridge
- temperature limitation adjustable
- with isolated water conduction - without contact with nickel and lead
- suitable for continuous flow water heaters
- pop-up waste set G 1¼
- material waste set: synthetic
- connection type: G ⅜ connections
- connection dimension: DN15

NEW



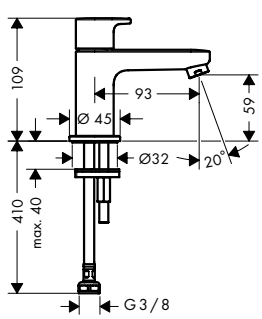

Pillar tap 70 for cold water or pre-adjusted water without waste set

Chrome — 71583000 — 55.70
Matt Black — 71583670 — 78.00

AirPower EcoSmart Comfort Zone

- ComfortZone 70
- projection 93 mm
- spray type: normal spray
- maximum flow rate at 3 bar: 5 l/min
- ceramic valves 90°
- for cold water connection
- connection type: G ⅜ connections
- connection dimension: DN15

Measurements within scale drawings are in mm.

Technical specifications and units of measure are subject to change.

	finish	code no.	Euro

NEW

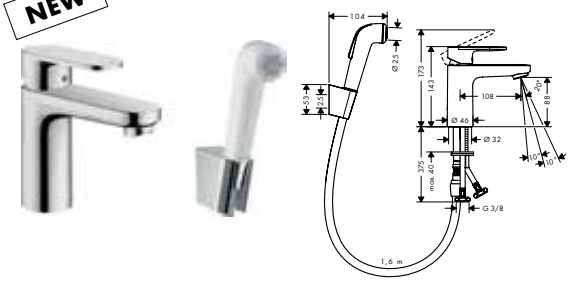

Single lever basin mixer 100 with bidette hand shower and shower hose 160 cm

Chrome 71215000 100.90

AirPower · EcoSmart · Comfort Zone · Quick Clean

- consists of: single lever basin mixer, bidette hand shower, shower holder, shower hose
- ComfortZone 100
- projection 108 mm
- spray type: normal spray, shower spray
- maximum flow rate at 3 bar: 5 l/ min
- ceramic cartridge
- temperature limitation adjustable
- connection type: G ⅜ connections
- connection dimension: DN15

NEW

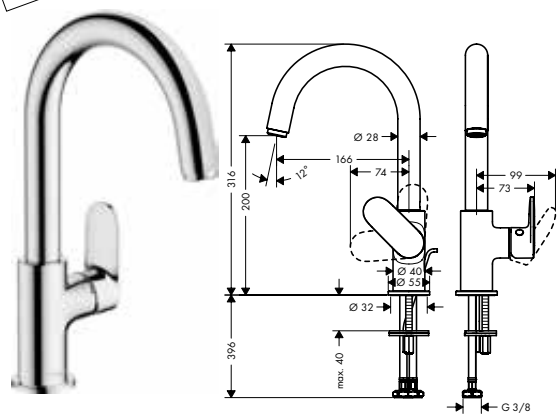

Single lever basin mixer with swivel spout and pop-up waste set

Chrome 71554000 140.00

EcoSmart · Comfort Zone

- consists of: single lever basin mixer, waste set
- ComfortZone 200
- projection 166 mm
- swivel range adjustable in 2 steps 120° or 360°
- spray type: laminar spray
- maximum flow rate at 3 bar: 5 l/ min
- ceramic cartridge
- suitable for continuous flow water heaters
- pop-up waste set G 1¼
- material waste set: synthetic
- connection type: G ⅜ connections
- connection dimension: DN15

NEW



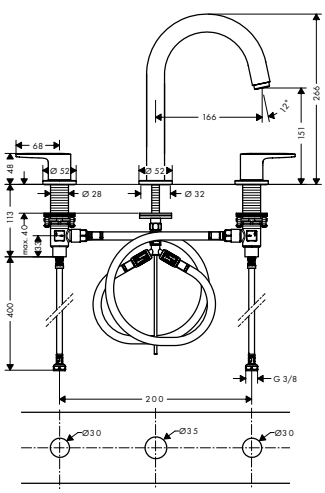

3-hole basin mixer with pop-up waste set

Chrome 71553000 170.00
Matt Black 71553670 238.00

AirPower · EcoSmart · Comfort Zone

- consists of: 3-hole basin mixer, waste set
- ComfortZone 150
- projection 166 mm
- spray type: laminar spray
- maximum flow rate at 3 bar: 5 l/ min
- ceramic valves hot/ cold 90°
- suitable for continuous flow water heaters
- pop-up waste set G 1¼
- material waste set: synthetic
- connection type: G ⅜ connections
- connection dimension: DN15

Measurements within scale drawings are in mm.

Technical specifications and units of measure are subject to change.

	finish	code no.	Euro
NEW			



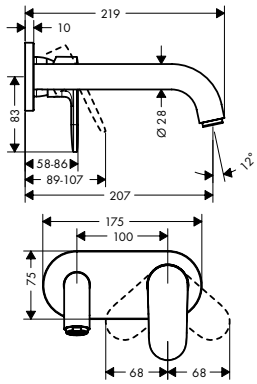

Single lever basin mixer for concealed installation wall-mounted with spout 20,7 cm

Chrome	71576000	120.00
Matt Black	71576670	168.00

AirPower EcoSmart

- projection 207 mm
- spray type: normal spray
- maximum flow rate at 3 bar: 5 l/min
- ceramic cartridge
- suitable for continuous flow water heaters
- connection type: basic set
- connection dimension: DN15
- handle can be positioned on the right or left, depends on the basic set installation

Required parts:

· Basic set for single lever basin mixer for concealed installation wall-mounted	13622180	220.50



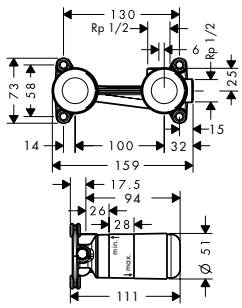

Basic set for single lever basin mixer for concealed installation wall-mounted

13622180 220.50

- installation depth: 44 - 72 mm
- variable positioning of the mixer system, can be left or right of the spout
- easy orientation due to support surfaces for the spirit level
- with building protection cover against contamination during assembly
- with dimension indication for exact determination of the installation depth
- with pre-mounted fastening lugs for mounting in drywall and solidwall
- sound-decoupled installation
- connection dimension: DN15

Optional parts:

· Extension set 2.5 cm	31971000	112.80

Measurements within scale drawings are in mm.

Technical specifications and units of measure are subject to change.

		finish	code no.	Euro
NEW	Electronic basin mixer with temperature pre-adjustment battery operation	Chrome	71502000	217.20



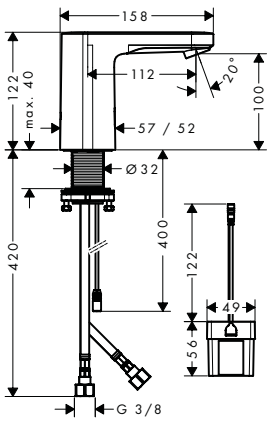

- ComfortZone 100
- projection 112 mm
- spray type: normal spray
- swiveling spray former
- temperature pre-adjustable
- with isolated water conduction - without contact with nickel and lead
- non-return valve
- infrared sensor technology
- automatic environmental adjustment of infrared sensor
- battery condition indicator available
- battery operation 6 V Lithium-battery, type CR-P2 (lifetime approx. 7 years, at 150 actuations per day, battery included in scope of supply)
- flushing time adjustable
- flushing time: 10 s, 20 s, 30 s
- hygiene rinse activatable (automatic water flow)
- frequency of hygiene rinse: 24 h, 48 h, 72 h
- flushing time hygiene rinse: 10 s, 20 s, 30 s
- permanent rinse activatable (single water flow for 200 seconds, suitable for thermal disinfection)
- cleaning mode: manual water stop for washbasin cleaning
- connection dimension: DN15
- dirt filters in the connection hoses
- frequency of hygiene rinse and flushing time hygiene rinse are dependent on each other (24 h - 10 s, 48 h - 20 s, 72 h - 30 s)

Alternative products:

NEW	· Electronic basin mixer with temperature pre-adjustment mains connection 230 V	Chrome	71501000	238.90

Measurements within scale drawings are in mm.

	finish	code no.	Euro

NEW



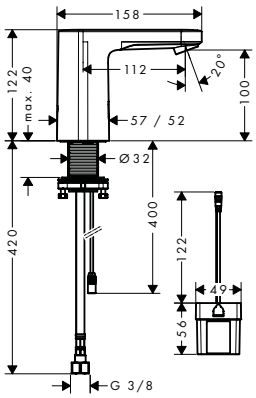

Electronic basin mixer for cold water or pre-adjusted water battery operation

Chrome 71503000 181.00

Sensor Activation · AirPower · Comfort Zone

- ComfortZone 100
- projection 112 mm
- spray type: normal spray
- swiveling spray former
- for cold water or pre-adjusted/ conditioned water
- with isolated water conduction - without contact with nickel and lead
- suitable for continous flow water heaters
- infrared sensor technology
- automatic environmental adjustment of infrared sensor
- battery condition indicator available
- battery operation 6 V Lithium-battery, type CR-P2 (lifetime approx. 7 years, at 150 actuations per day, battery included in scope of supply)
- flushing time adjustable
- flushing time: 10 s, 20 s, 30 s
- hygiene rinse activatable (automatic water flow)
- frequency of hygiene rinse: 24 h, 48 h, 72 h
- flushing time hygiene rinse: 10 s, 20 s, 30 s
- permanent rinse activatable (single water flow for 200 seconds, suitable for thermal disinfection)
- cleaning mode: manual water stop for washbasin cleaning
- connection dimension: DN15
- dirt filter in the connection hose
- frequency of hygiene rinse and flushing time hygiene rinse are dependent on each other (24 h - 10 s, 48 h - 20 s, 72 h - 30 s)

Alternative products:

NEW

- Electronic basin mixer for cold water or pre-adjusted water mains connection 230 V

Chrome 71504000 199.10

Bidet

NEW



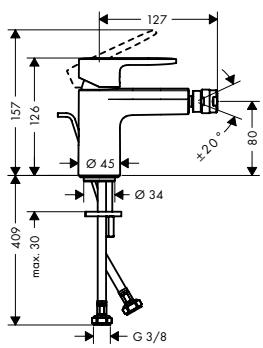

Single lever bidet mixer with pop-up waste set

Chrome 71210000 74.10
Matt Black 71210670 103.70

AirPower · EcoSmart

- consists of: single lever bidet mixer, waste set
- projection 127 mm
- aerator with ball pivot
- spray type: normal spray
- maximum flow rate at 3 bar: 5 l/min
- ceramic cartridge
- suitable for continous flow water heaters
- pop-up waste set G 1¼
- material waste set: synthetic
- connection type: G ⅜ connections
- connection dimension: DN15

Measurements within scale drawings are in mm.

Technical specifications and units of measure are subject to change.

	finish	code no.	Euro

NEW



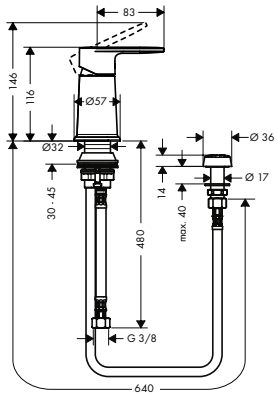

Bidet set with vertical spray

Chrome | 71214000 | 138.20

EcoSmart

- consists of: Bidet mixer, vertical spray
- maximum flow rate at 3 bar: 7,7 l/min
- ceramic cartridge
- vertical spray and diverter
- integrated non-return valve
- efficient from 0,5 bar onwards
- connection type: G ⅜ connections
- connection dimension: DN15

Bath

NEW



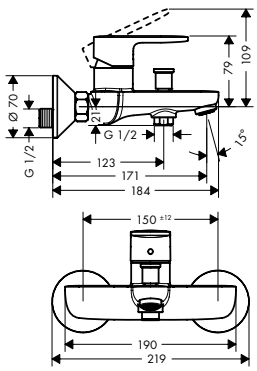

Single lever bath mixer for exposed installation

Chrome | 71440000 | 98.00
Matt Black | 71440670 | 137.20

AirPower

- 2 functions
- projection 171 mm
- connection type: s-shaped connections
- centre distance: 150 ± 12 mm
- spray type mixer: normal spray
- maximum flow rate at 3 bar: 22,5 l/min
- flow rate for bath spout at 3 bar: 22,5 l/min
- flow rate of hand shower at 3 bar: 15,7 l/min
- min. operating pressure: 1 bar
- max. operating pressure: 10 bar
- ceramic cartridge
- temperature limitation adjustable
- diverter with automatic resetting
- with silencer
- suitable for continous flow water heaters
- connection dimension: DN15

Alternative products:

NEW

- Single lever bath mixer for exposed installation with 2 flow rates

Chrome | 71454000 | 98.00

NEW

6x



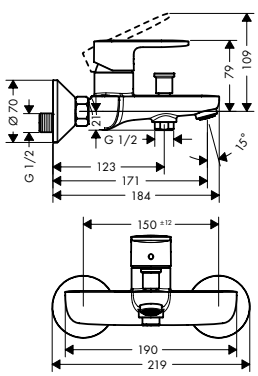

Single lever bath mixer for exposed installation projects pack (6 pcs.)

Chrome | 71447000 | 576.00

AirPower

- 2 functions
- projection 171 mm
- connection type: s-shaped connections
- centre distance: 150 ± 12 mm
- spray type mixer: normal spray
- maximum flow rate at 3 bar: 22,5 l/min
- flow rate for bath spout at 3 bar: 22,5 l/min
- flow rate of hand shower at 3 bar: 15,7 l/min
- min. operating pressure: 1 bar
- max. operating pressure: 10 bar
- ceramic cartridge
- temperature limitation adjustable
- diverter with automatic resetting
- with silencer
- suitable for continous flow water heaters
- connection dimension: DN15
- packaging unit: 6 pieces

Measurements within scale drawings are in mm.

Technical specifications and units of measure are subject to change.

	finish	code no.	Euro

NEW



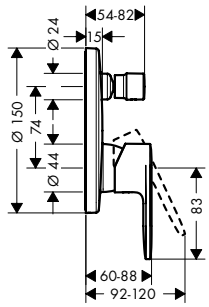

Single lever bath mixer for concealed installation for iBox universal

	Chrome	71466000	98.00
	Matt Black	71466670	137.20

- 2 functions
- connection type: basic set
- flow rate upper outlet: 21 l/min
- flow rate lower outlet: 29 l/min
- min. operating pressure: 1 bar
- max. operating pressure: 10 bar
- ceramic cartridge
- temperature limitation adjustable
- diverter with automatic resetting
- suitable for continous flow water heaters

Alternative products:

NEW

· Single lever bath mixer for concealed installation with integrated security combination according to EN1717 for iBox universal	Chrome	71467000	130.00
	Matt Black	71467670	182.00

Required parts:

· Basic set iBox universal		01800180	137.30



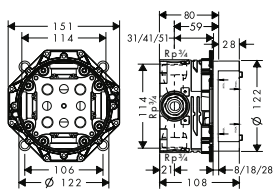

Basic set iBox universal

		01800180	137.30

- suitable for all shower, bath tub and thermostat finish sets for concealed installation
- connection thread Rp ¾
- rotationally-symmetric installation
- sound-decoupled installation
- connection dimension: DN20

Alternative products:

· Basic set iBox universal with shut-off unit		01850180	178.40

Optional parts:

· Extension iBox universal basic set 2.5 cm		13595000	50.40
· Fastening rail set for iBox universal		96615000	35.80
· Assembly aid for iBox universal		93500000	13.00

NEW



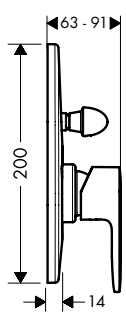

Single lever bath mixer for concealed installation

	Chrome	71449000	35.00
	Matt Black	71449670	49.00

- 2 functions
- connection type: basic set
- maximum flow rate at 3 bar: 30 l/min
- min. operating pressure: 1 bar
- max. operating pressure: 10 bar
- ceramic cartridge
- temperature limitation adjustable
- diverter with automatic resetting
- suitable for continous flow water heaters

Required parts:

· Basic set for single lever bath mixer for concealed installation		31741180	124.50



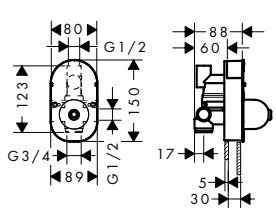

Basic set for single lever bath mixer for concealed installation

		31741180	124.50

- ceramic cartridge
- temperature limitation adjustable
- installation depth: 55 - 83 mm
- connection dimension: DN15

Optional parts:

· Extension for basic set for single lever bath mixer for concealed installation		32498000	127.30

Measurements within scale drawings are in mm.

Technical specifications and units of measure are subject to change.

	finish	code no.	Euro
Bath spout	Chrome	71420000	75.00
	Matt Black	71420670	105.00

NEW



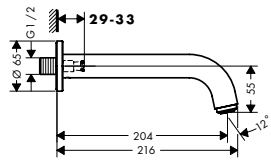

- 1 function
- with escutcheon
- projection 204 mm
- wall-mounted
- maximum flow rate at 3 bar: 21,7 l/ min
- connection dimension: G ½
- spray type: normal spray

AirPower

Optional parts:

- Connecting thread G ¾ — 92504000 — 44.90

4-hole rim mounted bath mixer — Chrome 71456000 250.00; Matt Black 71456670 350.00

NEW



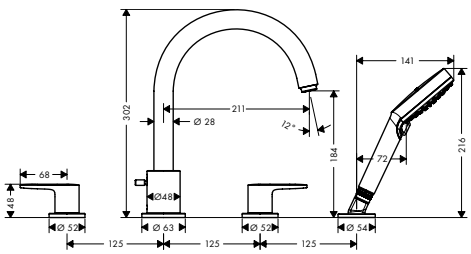

- consists of: 4-hole rim mounted bath mixer, hand shower
- 2 functions
- projection 211 mm
- connection type: G ½
- spray type mixer: normal spray
- spray type hand shower: Rain, IntenseRain
- maximum pull-out length of hand shower: 1.60 m
- maximum flow rate at 3 bar: 25 l/ min
- flow rate for bath spout at 3 bar: 25 l/ min
- flow rate of hand shower at 3 bar: 17 l/ min
- ceramic valves hot/ cold 90°
- non-return valve
- suitable for continous flow water heaters
- connection dimension: DN15
- maintenance opening required

AirPower

Consisting of:

- Hand shower Vario (# 26270XXX)

Required parts:

- Basic set for 4-hole rim mounted bath mixer — 13244180 — 289.00



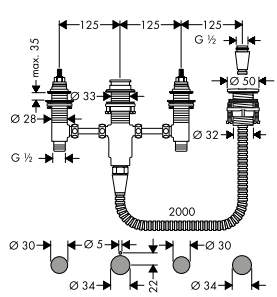

Basic set for 4-hole rim mounted bath mixer — 13244180 — 289.00

- consists of: basic set, shower holder, shower hose
- maximum pull-out length of hand shower: 1.60 m
- maintenance opening required
- suitable for 4-hole rim mounted bath mixer
- connection thread: G ½
- connection dimension: DN15
- ceramic valves hot/ cold 90°

2-hole rim mounted bath mixer — Chrome 71442000 168.00; Matt Black 71442670 235.20

NEW



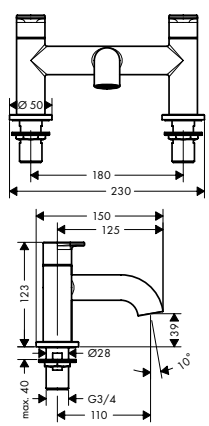

- 1 function
- projection 110 mm
- connection type: G ¾
- centre distance: 180 mm
- ceramic valves hot/ cold 90°
- operating pressure from 0.2 bar
- connection dimension: DN20

Measurements within scale drawings are in mm.

Technical specifications and units of measure are subject to change.

	finish	code no.	Euro
2-hole rim mounted bath mixer with diverter valve and Vernis Blend hand shower Vario	Chrome Matt Black	71461000 71461670	201.60 282.20

NEW



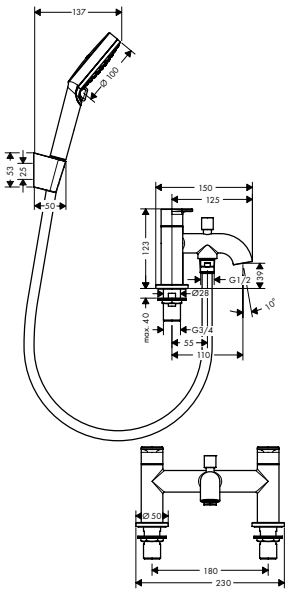

- consists of: 2-hole rim mounted bath mixer, hand shower, shower holder, shower hose
- 2 functions
- projection 110 mm
- connection type: G ¾
- centre distance: 180 mm
- maximum flow rate at 3 bar: 49,3 l/ min
- flow rate for bath spout at 3 bar: 49,3 l/ min
- flow rate of hand shower at 3 bar: 18,1 l/ min
- ceramic valves hot/ cold 90°
- operating pressure from 0.2 bar
- diverter with automatic resetting
- diverter lockable
- non-return valve
- with silencer
- connection dimension: DN20

Consisting of:

NEW
- Hand shower Vario (# 26270XXX)
- Shower holder Porter S (# 28331XXX)
- Shower hose 160 cm (# 28266000)

Single lever bath mixer Monotrou	Chrome	71443000	127.70

NEW



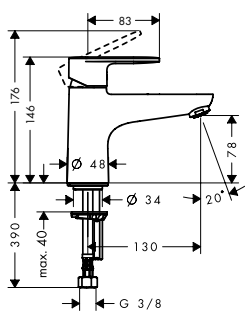

- 1 function
- projection 130 mm
- connection type: G ⅜ connections
- spray type mixer: normal spray
- maximum flow rate at 3 bar: 20 l/ min
- ceramic cartridge
- temperature limitation adjustable
- connection dimension: DN15

Single lever bath and shower mixer Monotrou	Chrome	71444000	136.60

NEW



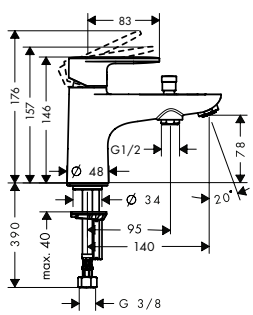

- 2 functions
- projection 140 mm
- connection type: G ⅜ connections
- spray type mixer: normal spray
- maximum flow rate at 3 bar: 20 l/ min
- flow rate for bath spout at 3 bar: 20 l/ min
- flow rate of hand shower at 3 bar: 14 l/ min
- ceramic cartridge
- temperature limitation adjustable
- diverter with automatic resetting
- protected against backflow, according to DIN EN1717
- suitable for continous flow water heaters
- connection dimension: DN15

Alternative products:

NEW · Single lever bath and shower mixer Monotrou with 2 flow rates	Chrome	71446000	136.60

Measurements within scale drawings are in mm.

Technical specifications and units of measure are subject to change.

Shower

	finish	code no.	Euro
NEW  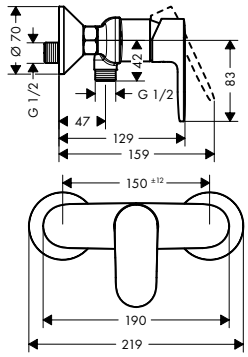	**Single lever shower mixer for exposed installation** · 1 function · connection type: s-shaped connections · flow rate of hand shower at 3 bar: 15,7 l/min · ceramic cartridge · min. operating pressure: 1 bar · max. operating pressure: 10 bar · temperature limitation adjustable · non-return valve · with silencer · suitable for continous flow water heaters · hose connection DN15 · connection dimension: DN15	Chrome Matt Black	71640000 71640670	77.40 108.40
	Alternative products:			
NEW	· Single lever shower mixer for exposed installation with 2 flow rates	Chrome	71646000	77.40
NEW  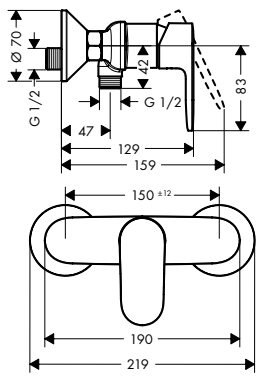	**Single lever shower mixer for exposed installation projects pack (6 pcs.)** · 1 function · connection type: s-shaped connections · flow rate of hand shower at 3 bar: 15,7 l/min · ceramic cartridge · min. operating pressure: 1 bar · max. operating pressure: 10 bar · temperature limitation adjustable · non-return valve · with silencer · suitable for continous flow water heaters · hose connection DN15 · connection dimension: DN15 · packaging unit: 6 pieces	Chrome	71647000	455.00
NEW  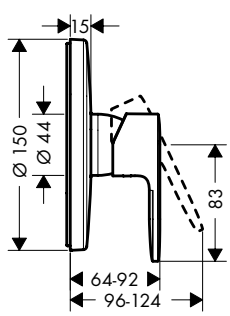	**Single lever shower mixer for concealed installation for iBox universal** · 1 function · connection type: basic set · maximum flow rate at 3 bar: 29,3 l/min · ceramic cartridge · min. operating pressure: 1 bar · max. operating pressure: 10 bar · temperature limitation adjustable	Chrome Matt Black	71667000 71667670	87.70 122.80
	Required parts:			
	· Basic set iBox universal		01800180	137.30

Measurements within scale drawings are in mm.

Technical specifications and units of measure are subject to change.

	finish	code no.	Euro
Basic set iBox universal · suitable for all shower, bath tub and thermostat finish sets for concealed installation · connection thread Rp ¾ · rotationally-symmetric installation · sound-decoupled installation · connection dimension: DN20		01800180	137.30
Alternative products:			
· Basic set iBox universal with shut-off unit		01850180	178.40
Optional parts:			
· Extension iBox universal basic set 2.5 cm		13595000	50.40
· Fastening rail set for iBox universal		96615000	35.80
· Assembly aid for iBox universal		93500000	13.00



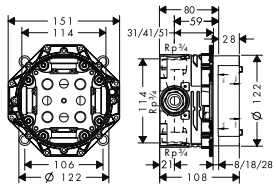

NEW

Single lever shower mixer for concealed installation · 1 function · connection type: basic set · maximum flow rate at 3 bar: 28,7 l/min · ceramic cartridge · min. operating pressure: 1 bar · max. operating pressure: 10 bar · temperature limitation adjustable	Chrome Matt Black	71649000 71649670	28.00 39.20
Required parts:			
· Basic set for single lever shower mixer for concealed installation		13620180	110.60



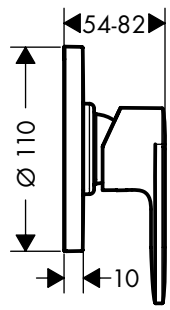

Basic set for single lever shower mixer for concealed installation · ceramic cartridge · temperature limitation adjustable · installation depth: 55 - 83 mm · connection dimension: DN15	13620180	110.60
Optional parts:		
· Extension set for basic set for single lever shower mixer for concealed installation	32698000	98.10



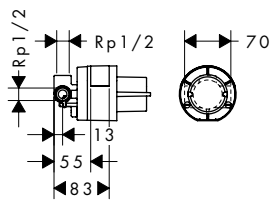

Measurements within scale drawings are in mm.

Technical specifications and units of measure are subject to change.

Basin

		finish	code no.	Euro

NEW



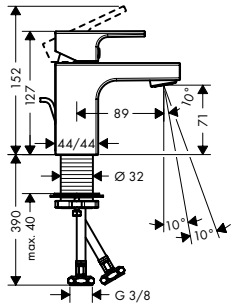

Single lever basin mixer 70 with pop-up waste set

Chrome 71560000 80.00
Matt Black 71560670 112.00

AirPower · EcoSmart · Comfort Zone

- consists of: single lever basin mixer, waste set
- ComfortZone 70
- projection 89 mm
- spray type: normal spray
- swiveling spray former
- maximum flow rate at 3 bar: 5 l/ min
- ceramic cartridge
- temperature limitation adjustable
- with isolated water conduction - without contact with nickel and lead
- suitable for continuous flow water heaters
- pop-up waste set G 1¼
- material waste set: synthetic
- connection type: G ⅜ connections
- connection dimension: DN15

Alternative products:

NEW · Single lever basin mixer 70 with metal pop-up waste set — Chrome 71566000 90.00

NEW · Single lever basin mixer 70 without waste set — Chrome 71567000 73.00; Matt Black 71567670 102.20

NEW · Single lever basin mixer 70 CoolStart with pop-up waste set — Chrome 71593000 80.00; Matt Black 71593670 112.00

NEW

6x



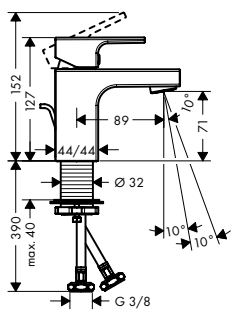

Single lever basin mixer 70 with pop-up waste set project pack (6 pcs.)

Chrome 71596000 470.00

AirPower · EcoSmart · Comfort Zone

- consists of: single lever basin mixer, waste set
- ComfortZone 70
- projection 89 mm
- spray type: normal spray
- swiveling spray former
- maximum flow rate at 3 bar: 5 l/ min
- ceramic cartridge
- temperature limitation adjustable
- with isolated water conduction - without contact with nickel and lead
- suitable for continuous flow water heaters
- pop-up waste set G 1¼
- material waste set: synthetic
- connection type: G ⅜ connections
- connection dimension: DN15
- packaging unit: 6 pieces

Measurements within scale drawings are in mm.

		finish	code no.	Euro
NEW	Single lever basin mixer 100 with pop-up waste set	Chrome	71561000	105.00
		Matt Black	71561670	147.00



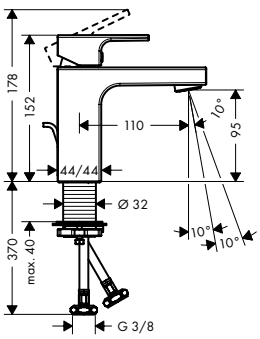

- consists of: single lever basin mixer, waste set
- ComfortZone 100
- projection 110 mm
- spray type: normal spray
- swiveling spray former
- maximum flow rate at 3 bar: 5 l/min
- ceramic cartridge
- temperature limitation adjustable
- with isolated water conduction - without contact with nickel and lead
- suitable for continuous flow water heaters
- pop-up waste set G 1¼
- material waste set: synthetic
- connection type: G ⅜ connections
- connection dimension: DN15

Alternative products:

		finish	code no.	Euro
NEW	Single lever basin mixer 100 with metal pop-up waste set	Chrome	71568000	115.00
NEW	Single lever basin mixer 100 without waste set	Chrome	71569000	98.00
		Matt Black	71569670	137.20
NEW	Single lever basin mixer 100 CoolStart with pop-up waste set	Chrome	71594000	105.00
		Matt Black	71594670	147.00

NEW	Single lever basin mixer 100 with pop-up waste set project pack (6 pcs.)	Chrome	71597000	617.00



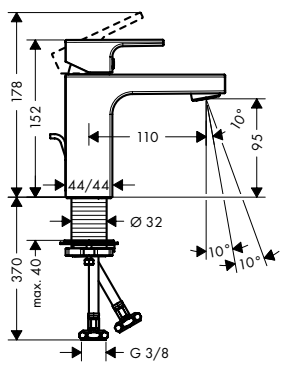

- consists of: single lever basin mixer, waste set
- ComfortZone 100
- projection 110 mm
- spray type: normal spray
- swiveling spray former
- maximum flow rate at 3 bar: 5 l/min
- ceramic cartridge
- temperature limitation adjustable
- with isolated water conduction - without contact with nickel and lead
- suitable for continuous flow water heaters
- pop-up waste set G 1¼
- material waste set: synthetic
- connection type: G ⅜ connections
- connection dimension: DN15
- packaging unit: 6 pieces

Measurements within scale drawings are in mm.

Technical specifications and units of measure are subject to change.

	finish	code no.	Euro

NEW

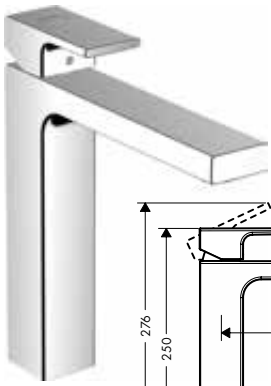

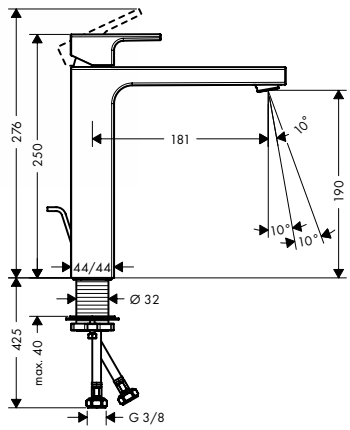

Single lever basin mixer 190 with pop-up waste set

- consists of: single lever basin mixer, waste set
- ComfortZone 190
- projection 181 mm
- spray type: normal spray
- swiveling spray former
- maximum flow rate at 3 bar: 5 l/ min
- ceramic cartridge
- temperature limitation adjustable
- with isolated water conduction - without contact with nickel and lead
- suitable for continuous flow water heaters
- pop-up waste set G 1¼
- material waste set: synthetic
- connection type: G ⅜ connections
- connection dimension: DN15

	finish	code no.	Euro
	Chrome	71562000	137.00
	Matt Black	71562670	191.80

AirPower EcoSmart Comfort Zone

Alternative products:

	finish	code no.	Euro
NEW · Single lever basin mixer 190 with metal pop-up waste set	Chrome	71590000	147.00
NEW · Single lever basin mixer 190 without waste set	Chrome	71591000	130.00
	Matt Black	71591670	182.00

NEW



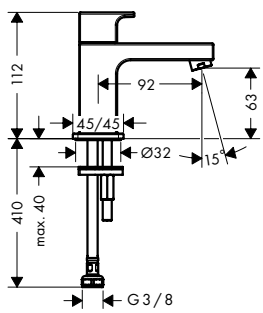

Pillar tap 70 for cold water or pre-adjusted water without waste set

- ComfortZone 70
- projection 92 mm
- spray type: normal spray
- maximum flow rate at 3 bar: 5 l/ min
- ceramic cartridge
- for cold water connection
- connection type: G ⅜ connections
- connection dimension: DN15

	finish	code no.	Euro
	Chrome	71592000	66.40
	Matt Black	71592670	93.00

AirPower EcoSmart Comfort Zone

NEW



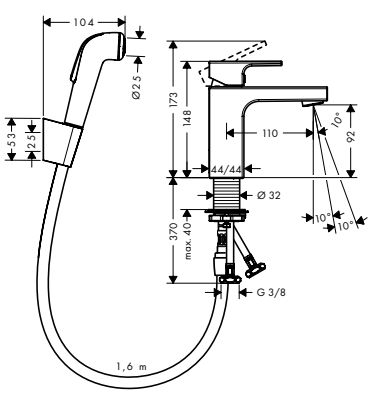

Single lever basin mixer 100 with bidette hand shower and shower hose 160 cm

- consists of: single lever basin mixer, bidette hand shower, shower holder, shower hose
- ComfortZone 100
- projection 110 mm
- spray type: normal spray, shower spray
- maximum flow rate at 3 bar: 5 l/ min
- ceramic cartridge
- temperature limitation adjustable
- with isolated water conduction - without contact with nickel and lead
- connection type: G ⅜ connections
- connection dimension: DN15

	finish	code no.	Euro
	Chrome	71216000	120.80

AirPower EcoSmart Comfort Zone Quick Clean

Measurements within scale drawings are in mm.

	finish	code no.	Euro

NEW



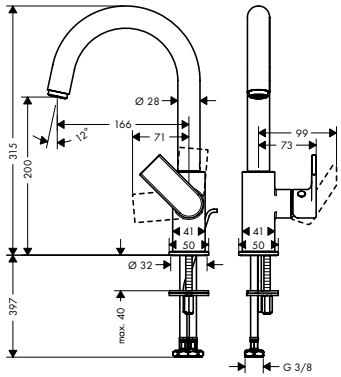

Single lever basin mixer with swivel spout and pop-up waste set

	Chrome	71564000	167.00

EcoSmart · Comfort Zone

- consists of: single lever basin mixer, waste set
- ComfortZone 200
- projection 166 mm
- swivel range 120°
- spray type: laminar spray
- maximum flow rate at 3 bar: 5 l/min
- ceramic cartridge
- suitable for continuous flow water heaters
- pop-up waste set G 1¼
- material waste set: synthetic
- connection type: G ⅜ connections
- connection dimension: DN15

NEW



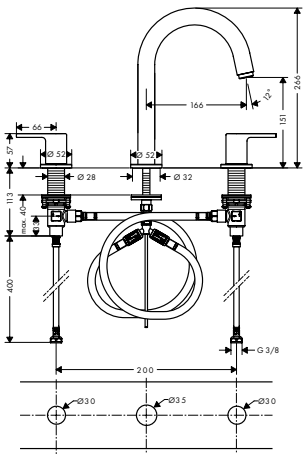

3-hole basin mixer with pop-up waste set

	Chrome	71563000	170.00
	Matt Black	71563670	238.00

AirPower · EcoSmart · Comfort Zone

- consists of: 3-hole basin mixer, waste set
- ComfortZone 150
- projection 166 mm
- spray type: laminar spray
- maximum flow rate at 3 bar: 5 l/min
- ceramic valves hot/ cold 90°
- suitable for continuous flow water heaters
- pop-up waste set G 1¼
- material waste set: synthetic
- connection type: G ⅜ connections
- connection dimension: DN15

NEW



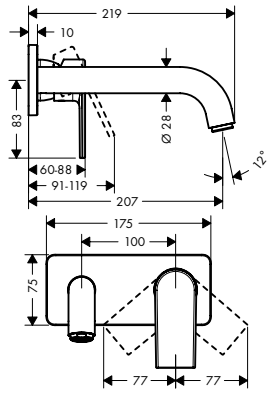

Single lever basin mixer for concealed installation wall-mounted with spout 20,7 cm

	Chrome	71578000	130.00
	Matt Black	71578670	182.00

AirPower · EcoSmart

- projection 207 mm
- spray type: normal spray
- maximum flow rate at 3 bar: 5 l/min
- ceramic cartridge
- suitable for continuous flow water heaters
- connection type: basic set
- connection dimension: DN15
- handle can be positioned on the right or left, depends on the basic set installation

Required parts:

· Basic set for single lever basin mixer for concealed installation wall-mounted	13622180	220.50

Measurements within scale drawings are in mm.

Technical specifications and units of measure are subject to change.

	finish	code no.	Euro



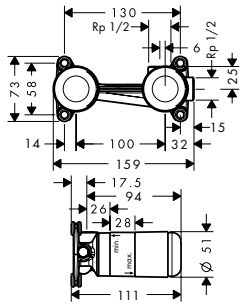

Basic set for single lever basin mixer for concealed installation wall-mounted

- installation depth: 44 - 72 mm
- variable positioning of the mixer system, can be left or right of the spout
- easy orientation due to support surfaces for the spirit level
- with building protection cover against contamination during assembly
- with dimension indication for exact determination of the installation depth
- with pre-mounted fastening lugs for mounting in drywall and solidwall
- sound-decoupled installation
- connection dimension: DN15

	13622180	220.50

Optional parts:

· Extension set 2.5 cm	31971000	112.80

Bidet

NEW



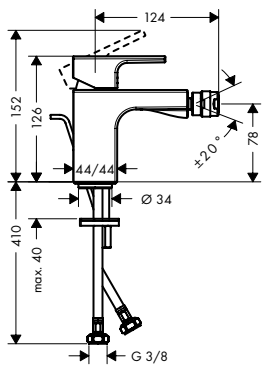

Single lever bidet mixer with pop-up waste set

- consists of: single lever bidet mixer, waste set
- projection 124 mm
- aerator with ball pivot
- spray type: normal spray
- maximum flow rate at 3 bar: 4,8 l/min
- ceramic cartridge
- suitable for continous flow water heaters
- pop-up waste set G 1¼
- material waste set: synthetic
- connection type: G ⅜ connections
- connection dimension: DN15

Chrome	71211000	87.00
Matt Black	71211670	121.80

AirPower EcoSmart

Bath

NEW



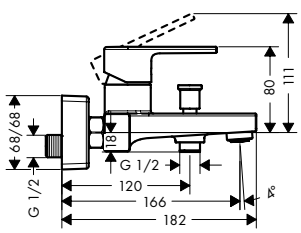

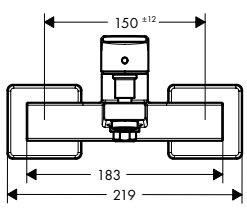

Single lever bath mixer for exposed installation

- 2 functions
- projection 166 mm
- connection type: s-shaped connections
- centre distance: 150 ± 12 mm
- spray type mixer: normal spray
- maximum flow rate at 3 bar: 22,5 l/min
- flow rate for bath spout at 3 bar: 22,5 l/min
- flow rate of hand shower at 3 bar: 15,7 l/min
- min. operating pressure: 1 bar
- max. operating pressure: 10 bar
- ceramic cartridge
- temperature limitation adjustable
- diverter with automatic resetting
- with silencer
- suitable for continous flow water heaters
- connection dimension: DN15

Chrome	71450000	117.00
Matt Black	71450670	163.80

AirPower

Alternative products:

NEW	· Single lever bath mixer for exposed installation with 2 flow rates	Chrome	71453000	117.00

Measurements within scale drawings are in mm.

Technical specifications and units of measure are subject to change.

	finish	code no.	Euro

NEW

6x



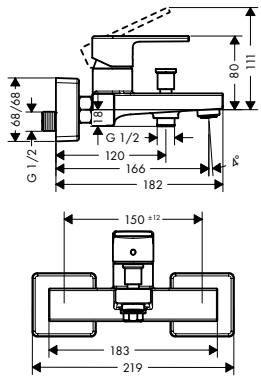

Single lever bath mixer for exposed installation project pack (6 pcs.)

Chrome — 71457000 — 688.00

AirPower

- 2 functions
- projection 166 mm
- connection type: s-shaped connections
- spray type mixer: normal spray
- maximum flow rate at 3 bar: 22,5 l/min
- flow rate for bath spout at 3 bar: 22,5 l/min
- flow rate of hand shower at 3 bar: 15,7 l/min
- min. operating pressure: 1 bar
- max. operating pressure: 10 bar
- ceramic cartridge
- temperature limitation adjustable
- diverter with automatic resetting
- with silencer
- suitable for continous flow water heaters
- connection dimension: DN15
- packaging unit: 6 pieces

NEW



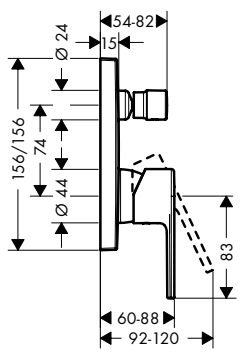

Single lever bath mixer for concealed installation for iBox universal

NEW

Chrome — 71468000 — 112.70
Matt Black — 71468670 — 157.80

- 2 functions
- connection type: basic set
- flow rate upper outlet: 21 l/min
- flow rate lower outlet: 29 l/min
- min. operating pressure: 1 bar
- max. operating pressure: 10 bar
- ceramic cartridge
- temperature limitation adjustable
- diverter with automatic resetting
- suitable for continous flow water heaters

Alternative products:

- Single lever bath mixer for concealed installation with integrated security combination according to EN1717 for iBox universal — Chrome — 71469000 — 149.40; Matt Black — 71469670 — 209.20

Required parts:

- Basic set iBox universal — 01800180 — 137.30



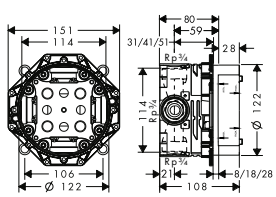

Basic set iBox universal

01800180 — 137.30

- suitable for all shower, bath tub and thermostat finish sets for concealed installation
- connection thread Rp ¾
- rotationally-symmetric installation
- sound-decoupled installation
- connection dimension: DN20

Alternative products:

- Basic set iBox universal with shut-off unit — 01850180 — 178.40

Optional parts:

- Extension iBox universal basic set 2.5 cm — 13595000 — 50.40
- Fastening rail set for iBox universal — 96615000 — 35.80
- Assembly aid for iBox universal — 93500000 — 13.00

Measurements within scale drawings are in mm.

Technical specifications and units of measure are subject to change.

	finish	code no.	Euro

NEW



Single lever bath mixer for concealed installation

	Chrome	71458000 38.00
	Matt Black	71458670 53.20

- 2 functions
- connection type: basic set
- maximum flow rate at 3 bar: 30 l/ min
- min. operating pressure: 1 bar
- max. operating pressure: 10 bar
- ceramic cartridge
- temperature limitation adjustable
- diverter with automatic resetting
- suitable for continous flow water heaters

Required parts:

- Basic set for single lever bath mixer for concealed installation — 31741180 — 124.50



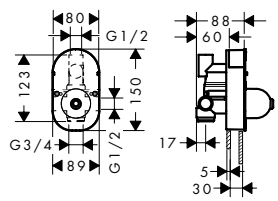

Basic set for single lever bath mixer for concealed installation

31741180 — 124.50

- ceramic cartridge
- temperature limitation adjustable
- installation depth: 55 - 83 mm
- connection dimension: DN15

Optional parts:

- Extension for basic set for single lever bath mixer for concealed installation — 32498000 — 127.30

NEW



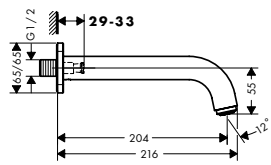

Bath spout

	Chrome	71460000 75.00
	Matt Black	71460670 105.00

AirPower

- 1 function
- with escutcheon
- projection 204 mm
- wall-mounted
- maximum flow rate at 3 bar: 21,7 l/ min
- connection dimension: G ½
- spray type: normal spray

Optional parts:

- Connecting thread G ¾ — 92504000 — 44.90

NEW



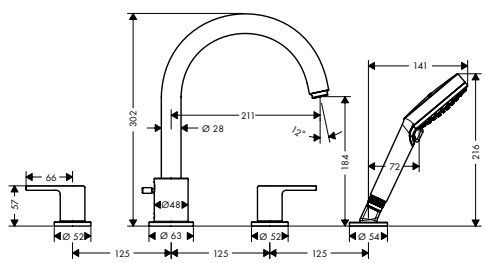

4-hole rim mounted bath mixer

	Chrome	71459000 250.00
	Matt Black	71459670 350.00

AirPower

- consists of: 4-hole rim mounted bath mixer, hand shower
- 2 functions
- projection 211 mm
- connection type: G ½
- spray type mixer: normal spray
- spray type hand shower: Rain, IntenseRain
- maximum pull-out length of hand shower: 1.60 m
- maximum flow rate at 3 bar: 25 l/ min
- flow rate for bath spout at 3 bar: 25 l/ min
- flow rate of hand shower at 3 bar: 17 l/ min
- ceramic valves hot/ cold 90°
- non-return valve
- suitable for continous flow water heaters
- connection dimension: DN15
- maintenance opening required

Consisting of:

- Hand shower Vario (# 26270XXX)

Required parts:

- Basic set for 4-hole rim mounted bath mixer — 13244180 — 289.00

Measurements within scale drawings are in mm.

Technical specifications and units of measure are subject to change.

	finish	code no.	Euro



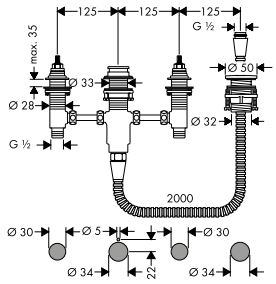

Basic set for 4-hole rim mounted bath mixer

13244180 — 289.00

- consists of: basic set, shower holder, shower hose
- maximum pull-out length of hand shower: 1.60 m
- maintenance opening required
- suitable for 4-hole rim mounted bath mixer
- connection thread: G ½
- connection dimension: DN15
- ceramic valves hot/ cold 90°

NEW



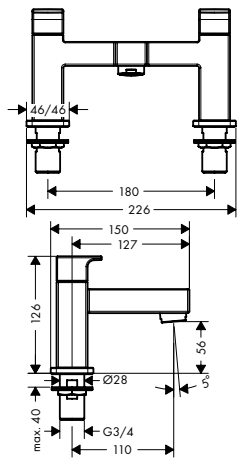

2-hole rim mounted bath mixer

- 1 function
- projection 110 mm
- connection type: G ¾
- centre distance: 180 mm
- ceramic valves hot/ cold 90°
- operating pressure from 0.2 bar
- connection dimension: DN20

Chrome	71452000	201.60
Matt Black	71452670	282.20

NEW



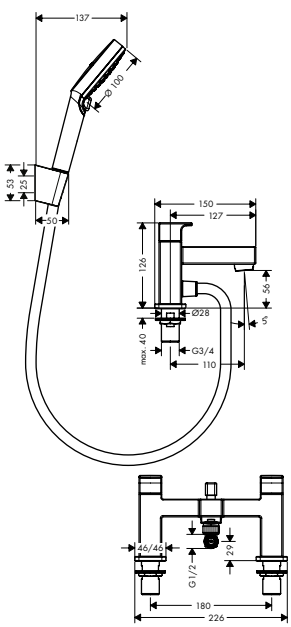

2-hole rim mounted bath mixer with diverter valve and Vernis Blend hand shower Vario

NEW

- consists of: 2-hole rim mounted bath mixer, hand shower, shower holder, shower hose
- 2 functions
- projection 110 mm
- connection type: G ¾
- centre distance: 180 mm
- maximum flow rate at 3 bar: 49,3 l/ min
- flow rate for bath spout at 3 bar: 49,3 l/ min
- flow rate of hand shower at 3 bar: 18,1 l/ min
- ceramic valves hot/ cold 90°
- operating pressure from 0.2 bar
- diverter with automatic resetting
- diverter lockable
- non-return valve
- with silencer
- connection dimension: DN20

Consisting of:

- Hand shower Vario (# 26270XXX)
- Shower holder Porter S (# 28331XXX)
- Shower hose 160 cm (# 28266000)

Chrome	71462000	241.90
Matt Black	71462670	338.70

Measurements within scale drawings are in mm.

Technical specifications and units of measure are subject to change.

	finish	code no.	Euro
NEW  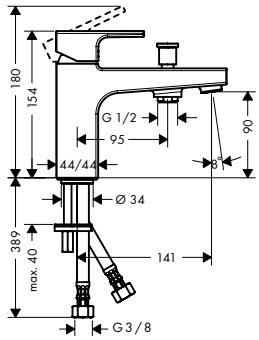			
Single lever bath and shower mixer Monotrou · 2 functions · projection 95 mm · connection type: G ⅜ connections · spray type mixer: normal spray · maximum flow rate at 3 bar: 24 l/min · flow rate for bath spout at 3 bar: 24 l/min · flow rate of hand shower at 3 bar: 13,7 l/min · ceramic cartridge · temperature limitation adjustable · diverter with automatic resetting · protected against backflow, according to DIN EN1717 · suitable for continous flow water heaters · connection dimension: DN15	Chrome	71463000	153.20
Alternative products:			
NEW · Single lever bath and shower mixer Monotrou with 2 flow rates	Chrome	71464000	153.20

Shower

NEW  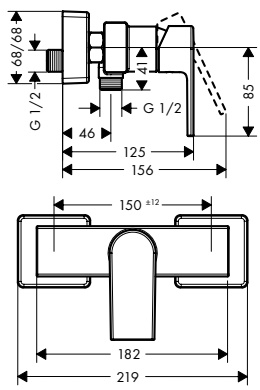			
Single lever shower mixer for exposed installation · 1 function · connection type: s-shaped connections · flow rate of hand shower at 3 bar: 15,7 l/min · ceramic cartridge · min. operating pressure: 1 bar · max. operating pressure: 10 bar · temperature limitation adjustable · non-return valve · with silencer · suitable for continous flow water heaters · hose connection DN15 · connection dimension: DN15	Chrome Matt Black	71650000 71650670	92.00 128.80
Alternative products:			
NEW · Single lever shower mixer for exposed installation with 2 flow rates	Chrome	71656000	92.00
NEW  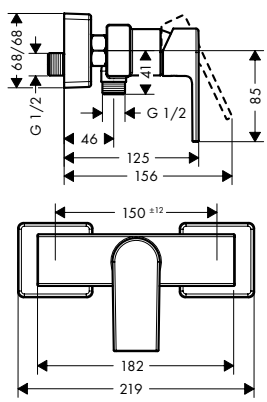			
Single lever shower mixer for exposed installation project pack (6 pcs.) · 1 function · connection type: s-shaped connections · maximum flow rate at 3 bar: 15,7 l/min · flow rate of hand shower at 3 bar: 15,7 l/min · ceramic cartridge · min. operating pressure: 1 bar · max. operating pressure: 10 bar · temperature limitation adjustable · non-return valve · with silencer · suitable for continous flow water heaters · hose connection DN15 · connection dimension: DN15 · packaging unit: 6 pieces	Chrome	71657000	541.00

Measurements within scale drawings are in mm.

	finish	code no.	Euro

NEW



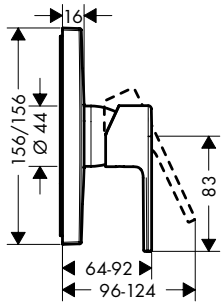

Single lever shower mixer for concealed installation for iBox universal

- 1 function
- connection type: basic set
- maximum flow rate at 3 bar: 29,3 l/min
- ceramic cartridge
- min. operating pressure: 1 bar
- max. operating pressure: 10 bar
- temperature limitation adjustable

	finish	code no.	Euro
	Chrome	71668000	100.80
	Matt Black	71668670	141.10

Required parts:

· Basic set iBox universal		01800180	137.30



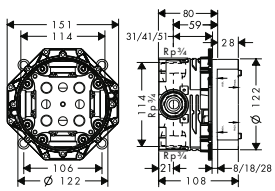

Basic set iBox universal

		01800180	137.30

- suitable for all shower, bath tub and thermostat finish sets for concealed installation
- connection thread Rp ¾
- rotationally-symmetric installation
- sound-decoupled installation
- connection dimension: DN20

Alternative products:

· Basic set iBox universal with shut-off unit		01850180	178.40

Optional parts:

· Extension iBox universal basic set 2.5 cm		13595000	50.40
· Fastening rail set for iBox universal		96615000	35.80
· Assembly aid for iBox universal		93500000	13.00

NEW



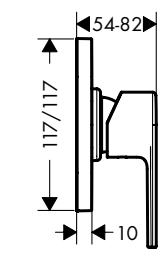

Single lever shower mixer for concealed installation

- 1 function
- connection type: basic set
- maximum flow rate at 3 bar: 28,7 l/min
- ceramic cartridge
- min. operating pressure: 1 bar
- max. operating pressure: 10 bar
- temperature limitation adjustable

	finish	code no.	Euro
	Chrome	71658000	33.00
	Matt Black	71658670	46.20

Required parts:

· Basic set for single lever shower mixer for concealed installation		13620180	110.60



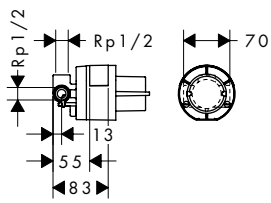

Basic set for single lever shower mixer for concealed installation

		13620180	110.60

- ceramic cartridge
- temperature limitation adjustable
- installation depth: 55 - 83 mm
- connection dimension: DN15

Optional parts:

· Extension set for basic set for single lever shower mixer for concealed installation		32698000	98.10

Measurements within scale drawings are in mm.

Technical specifications and units of measure are subject to change.

Logis®



Basin	page 490		Bidet	page 497	
Bath	page 498		Shower	page 503	
Valve	page 505				

Basin



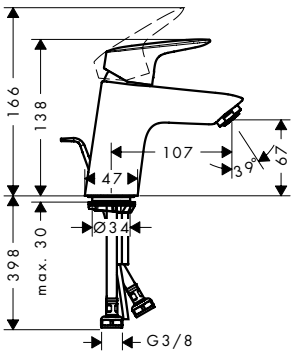

	finish	code no.	Euro
Single lever basin mixer 70 with pop-up waste set · consists of: single lever basin mixer, waste set · ComfortZone 70 · projection 107 mm · spray type: normal spray · maximum flow rate at 3 bar: 5 l/min · ceramic cartridge · temperature limitation adjustable · suitable for continuous flow water heaters · pop-up waste set G 1¼ · material waste set: synthetic · connection type: G ⅜ connections · connection dimension: DN15	Chrome	71070000	81.90
Alternative products:			
· Single lever basin mixer 70 with metal pop-up waste set	Chrome	71170000	93.30
· Single lever basin mixer 70 with push-open waste set	Chrome	71077000	81.90
· Single lever basin mixer 70 without waste set	Chrome	71071000	76.10
· Single lever basin mixer 70 LowFlow with pop-up waste set	Chrome	71078000	81.90



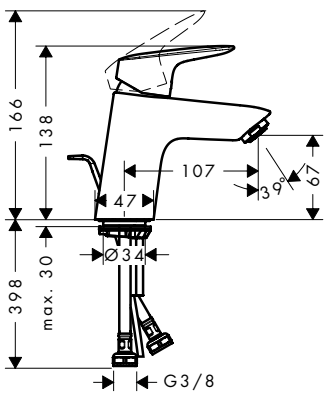

	finish	code no.	Euro
Single lever basin mixer 70 CoolStart with pop-up waste set · consists of: single lever basin mixer, waste set · ComfortZone 70 · projection 107 mm · spray type: normal spray · maximum flow rate at 3 bar: 5 l/min · ceramic cartridge · temperature limitation adjustable · suitable for continuous flow water heaters · pop-up waste set G 1¼ · material waste set: synthetic · connection type: G ⅜ connections · connection dimension: DN15 · cold water in middle position	Chrome	71072000	81.90
Alternative products:			
· Single lever basin mixer 70 CoolStart without waste set	Chrome	71073000	76.10

Measurements within scale drawings are in mm.

Technical specifications and units of measure are subject to change.

	finish	code no.	Euro



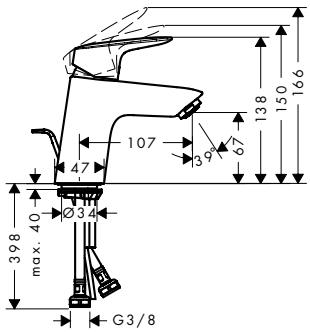

Single lever basin mixer 70 with 2 flow rates with pop-up waste set

Chrome — 71075000 — 81.90

AirPower · EcoSmart · Comfort Zone

- consists of: single lever basin mixer, waste set
- ComfortZone 70
- projection 107 mm
- spray type: normal spray
- maximum flow rate at 3 bar: 9,5 l/min
- ceramic cartridge with Eco handle position for 2 flow rates
- temperature limitation adjustable
- suitable for continuous flow water heaters
- pop-up waste set G 1¼
- material waste set: synthetic
- connection type: G ⅜ connections
- connection dimension: DN15

Alternative products:

- Single lever basin mixer 70 with 2 flow rates without waste set — Chrome — 71076000 — 76.10



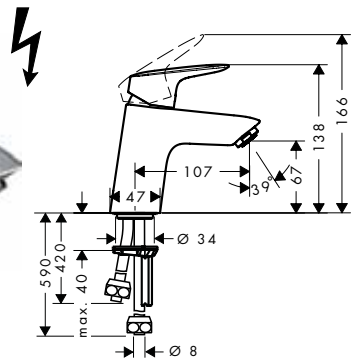

Single lever basin mixer 70 for vented hot water cylinders with push-open waste set

Chrome — 71074000 — 158.10

EcoSmart · Comfort Zone

- consists of: single lever basin mixer, waste set
- ComfortZone 70
- projection 107 mm
- spray type: normal spray
- maximum flow rate at 3 bar: 5 l/min
- ceramic cartridge
- temperature limitation adjustable
- push-open waste set G 1¼
- material waste set: synthetic
- connection type: copper pipe connections



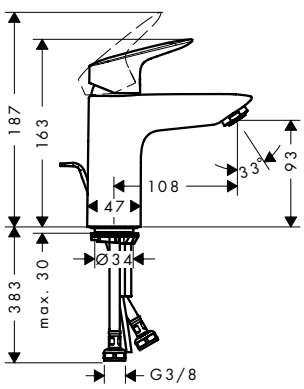

Single lever basin mixer 100 with pop-up waste set

Chrome — 71100000 — 105.40

AirPower · EcoSmart · Comfort Zone

- consists of: single lever basin mixer, waste set
- ComfortZone 100
- projection 108 mm
- spray type: normal spray
- maximum flow rate at 3 bar: 5 l/min
- ceramic cartridge
- temperature limitation adjustable
- suitable for continuous flow water heaters
- pop-up waste set G 1¼
- material waste set: synthetic
- connection type: G ⅜ connections
- connection dimension: DN15

Alternative products:

- Single lever basin mixer 100 with metal pop-up waste set — Chrome — 71171000 — 116.80
- Single lever basin mixer 100 with push-open waste set — Chrome — 71107000 — 105.40
- Single lever basin mixer 100 LowFlow with pop-up waste set — Chrome — 71104000 — 105.40
- Single lever basin mixer 100 without waste set — Chrome — 71101000 — 99.60

Measurements within scale drawings are in mm.

	finish	code no.	Euro



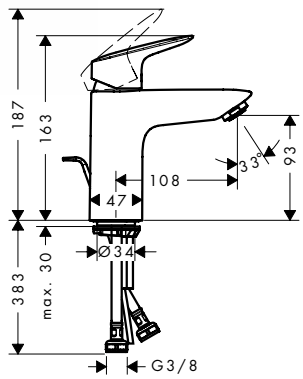

Single lever basin mixer 100 CoolStart with pop-up waste set

Chrome	71102000	105.40

AirPower · EcoSmart · Comfort Zone · CoolStart

- consists of: single lever basin mixer, waste set
- ComfortZone 100
- projection 108 mm
- spray type: normal spray
- maximum flow rate at 3 bar: 5 l/min
- ceramic cartridge
- temperature limitation adjustable
- suitable for continuous flow water heaters
- pop-up waste set G 1¼
- material waste set: synthetic
- connection type: G ⅜ connections
- connection dimension: DN15
- cold water in middle position

Alternative products:

· Single lever basin mixer 100 CoolStart without waste set	Chrome	71103000	99.60



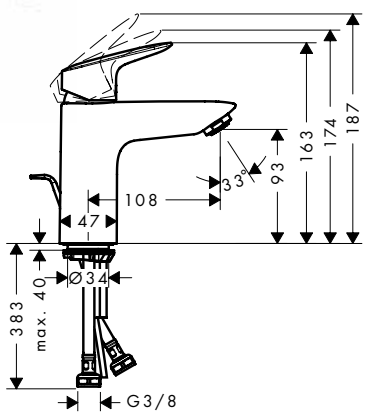

Single lever basin mixer 100 with 2 flow rates with pop-up waste set

Chrome	71105000	105.40

AirPower · EcoSmart · Comfort Zone

- consists of: single lever basin mixer, waste set
- ComfortZone 100
- projection 108 mm
- spray type: normal spray
- maximum flow rate at 3 bar: 9,5 l/min
- ceramic cartridge with Eco handle position for 2 flow rates
- temperature limitation adjustable
- suitable for continuous flow water heaters
- pop-up waste set G 1¼
- material waste set: synthetic
- connection type: G ⅜ connections
- connection dimension: DN15

NEW



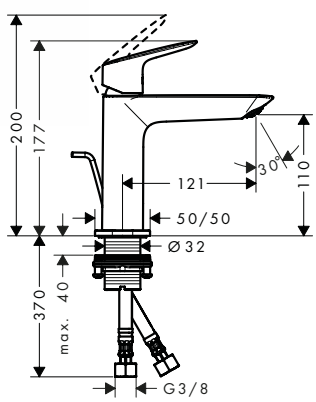

Single lever basin mixer 110 Fine with pop-up waste set

Chrome	71251000	109.00

AirPower · EcoSmart · Comfort Zone

- consists of: single lever basin mixer, waste set
- ComfortZone 110
- projection 121 mm
- spray type: normal spray
- maximum flow rate at 3 bar: 5 l/min
- ceramic cartridge
- temperature limitation adjustable
- suitable for continuous flow water heaters
- pop-up waste set G 1¼
- material waste set: synthetic
- connection type: G ⅜ connections
- connection dimension: DN15

Alternative products:

NEW · Single lever basin mixer 110 Fine with push-open waste set	Chrome	71252000	109.00
NEW · Single lever basin mixer 110 Fine without waste set	Chrome	71253000	103.00

Measurements within scale drawings are in mm.

Technical specifications and units of measure are subject to change.

	finish	code no.	Euro
NEW			
 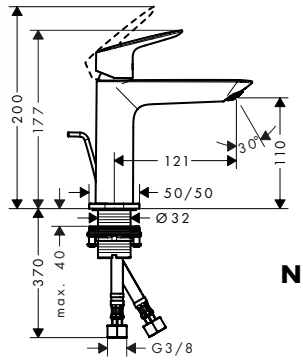 **NEW**	Single lever basin mixer 110 Fine CoolStart with pop-up waste set · consists of: single lever basin mixer, waste set · ComfortZone 110 · projection 121 mm · spray type: normal spray · maximum flow rate at 3 bar: 5 l/min · ceramic cartridge · temperature limitation adjustable · suitable for continuous flow water heaters · pop-up waste set G 1¼ · material waste set: synthetic · connection type: G ⅜ connections · connection dimension: DN15 · cold water in middle position	Chrome	71254000	109.00
	Alternative products: · Single lever basin mixer 110 Fine CoolStart without waste set	Chrome	71255000	103.00
 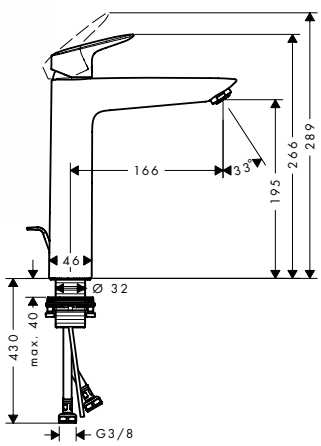	Single lever basin mixer 190 with pop-up waste set · consists of: single lever basin mixer, waste set · ComfortZone 190 · projection 166 mm · spray type: normal spray · maximum flow rate at 3 bar: 5 l/min · ceramic cartridge · temperature limitation adjustable · suitable for continuous flow water heaters · pop-up waste set G 1¼ · material waste set: synthetic · connection type: G ⅜ connections · connection dimension: DN15	Chrome	71090000	134.60
	Alternative products: · Single lever basin mixer 190 without waste set	Chrome	71091000	128.70
 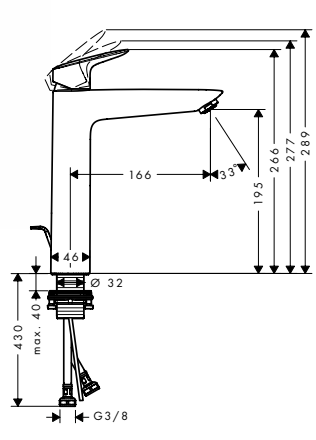	Single lever basin mixer 190 with 2 flow rates with pop-up waste set · consists of: single lever basin mixer, waste set · ComfortZone 190 · projection 166 mm · spray type: normal spray · maximum flow rate at 3 bar: 9,5 l/min · ceramic cartridge with Eco handle position for 2 flow rates · temperature limitation adjustable · suitable for continuous flow water heaters · pop-up waste set G 1¼ · material waste set: synthetic · connection type: G ⅜ connections · connection dimension: DN15	Chrome	71095000	134.60

Measurements within scale drawings are in mm.

	finish	code no.	Euro



Single lever basin mixer 210 with swivel spout and pop-up waste set

Chrome — 71130000 — 169.70

AirPower · EcoSmart · Comfort Zone

- consists of: single lever basin mixer, waste set
- ComfortZone 210
- projection 154 mm
- swivel range 120°
- spray type: normal spray
- maximum flow rate at 3 bar: 5 l/min
- ceramic cartridge
- temperature limitation adjustable
- suitable for continuous flow water heaters
- pop-up waste set G 1¼
- material waste set: synthetic
- connection type: G ⅜ connections
- connection dimension: DN15
- handle position on the side: bottom-side at the base body (not suitable for wash bowls)

Alternative products:

- Single lever basin mixer 210 with swivel spout without waste set — Chrome — 71131000 — 164.00

NEW



NEW

Single lever basin mixer 240 Fine with pop-up waste set

Chrome — 71257000 — 169.00

AirPower · EcoSmart · Comfort Zone

- consists of: single lever basin mixer, waste set
- ComfortZone 240
- projection 172 mm
- spray type: normal spray
- maximum flow rate at 3 bar: 5 l/min
- ceramic cartridge
- temperature limitation adjustable
- suitable for continuous flow water heaters
- pop-up waste set G 1¼
- material waste set: synthetic
- connection type: G ⅜ connections
- connection dimension: DN15

Alternative products:

- Single lever basin mixer 240 Fine without waste set — Chrome — 71258000 — 164.00



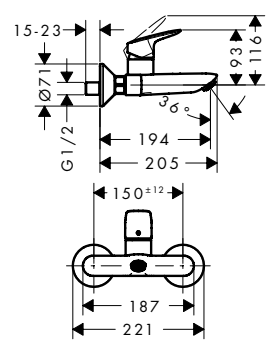

Single lever basin mixer for exposed installation wall-mounted

Chrome — 71225000 — 117.10

AirPower · EcoSmart · Quick Clean

- projection 194 mm
- centre distance: 150 ± 12 mm
- spray type: normal spray
- maximum flow rate at 3 bar: 5 l/min
- ceramic cartridge
- temperature limitation adjustable
- with noise reduction
- suitable for continuous flow water heaters
- connection type: G ½
- connection dimension: DN15

Measurements within scale drawings are in mm.

Technical specifications and units of measure are subject to change.

	finish	code no.	Euro



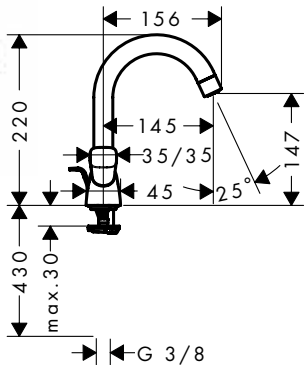

2-handle basin mixer 150 with pop-up waste set

Chrome — 71222000 — 105.40

AirPower · EcoSmart · Comfort Zone

- consists of: 2-handle basin mixer, waste set
- ComfortZone 150
- projection 145 mm
- swivel range 120°
- spray type: normal spray
- maximum flow rate at 3 bar: 5 l/min
- ceramic valves hot/ cold 90°
- suitable for continuous flow water heaters
- pop-up waste set G 1¼
- material waste set: synthetic
- connection type: G ⅜ connections
- connection dimension: DN15

Alternative products:

- 2-handle basin mixer 150 without waste set — Chrome — 71221000 — 99.60



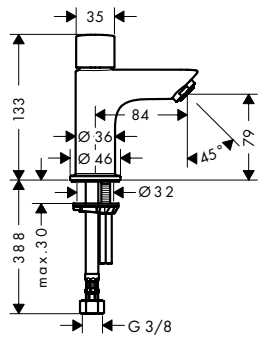

Pillar tap 70 for cold water or pre-adjusted water without waste set

Chrome — 71120000 — 70.20

AirPower · EcoSmart · Comfort Zone

- ComfortZone 70
- projection 84 mm
- spray type: normal spray
- maximum flow rate at 3 bar: 5 l/min
- ceramic valves 90°
- for cold water connection
- connection type: G ⅜ connections
- connection dimension: DN15



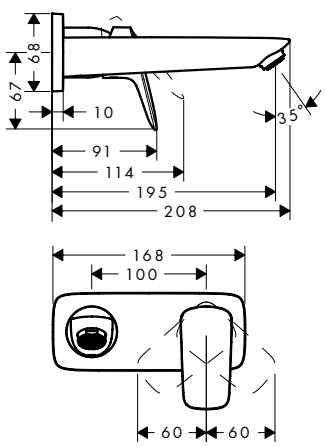

Single lever basin mixer for concealed installation wall-mounted with spout 19,5 cm

Chrome — 71220000 — 158.10

AirPower · EcoSmart

- consists of: single lever basin mixer for concealed installation wall-mounted, waste set
- projection 195 mm
- spray type: normal spray
- maximum flow rate at 3 bar: 5 l/min
- ceramic cartridge
- temperature limitation adjustable
- suitable for continuous flow water heaters
- non-closing waste set
- material waste set: metal
- connection type: basic set
- connection dimension: DN15
- handle can be positioned on the right or left, depends on the basic set installation

Required parts:

- Basic set for single lever basin mixer for concealed installation wall-mounted — 13622180 — 220.50

Measurements within scale drawings are in mm.

	finish	code no.	Euro

NEW



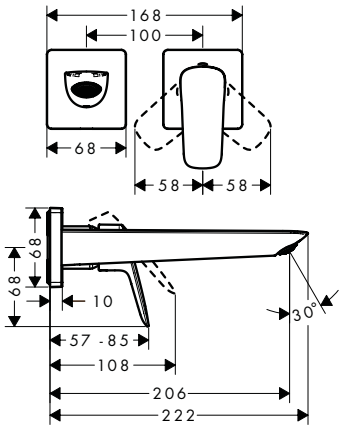

Single lever basin mixer for concealed installation Fine wall-mounted with spout 20,5 cm

Chrome — 71256000 — 164.00

AirPower EcoSmart

- consists of: single lever basin mixer for concealed installation wall-mounted, waste set
- projection 206 mm
- spray type: normal spray
- maximum flow rate at 3 bar: 5 l/min
- ceramic cartridge
- temperature limitation adjustable
- suitable for continuous flow water heaters
- non-closing waste set
- material waste set: metal
- connection type: basic set
- connection dimension: DN15
- handle can be positioned on the right or left, depends on the basic set installation

Required parts:

- Basic set for single lever basin mixer for concealed installation wall-mounted — 13622180 — 220.50



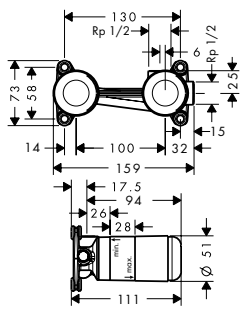

Basic set for single lever basin mixer for concealed installation wall-mounted

13622180 — 220.50

- installation depth: 44 - 72 mm
- variable positioning of the mixer system, can be left or right of the spout
- easy orientation due to support surfaces for the spirit level
- with building protection cover against contamination during assembly
- with dimension indication for exact determination of the installation depth
- with pre-mounted fastening lugs for mounting in drywall and solidwall
- sound-decoupled installation
- connection dimension: DN15

Optional parts:

- Extension set 2.5 cm — 31971000 — 112.80



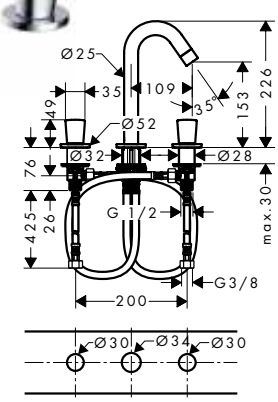

3-hole basin mixer 150 with pop-up waste set

Chrome — 71133000 — 210.70

AirPower EcoSmart Comfort Zone

- consists of: 3-hole basin mixer, waste set
- ComfortZone 150
- projection 109 mm
- maximum flow rate at 3 bar: 5 l/min
- ceramic valves hot/ cold 90°
- suitable for continuous flow water heaters
- pop-up waste set G 1¼
- material waste set: synthetic
- connection type: G ⅜ connections
- connection dimension: DN15

Measurements within scale drawings are in mm.

Technical specifications and units of measure are subject to change.

Bidet

	finish	code no.	Euro



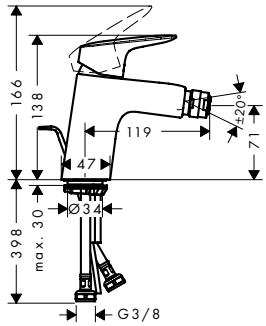

Single lever bidet mixer 70 with pop-up waste set

Chrome | 71204000 | 87.70

AirPower

- consists of: single lever bidet mixer, waste set
- projection 119 mm
- aerator with ball pivot
- spray type: normal spray
- maximum flow rate at 3 bar: 7,2 l/min
- ceramic cartridge
- temperature limitation adjustable
- suitable for continous flow water heaters
- material waste set: synthetic
- connection type: G ⅜ connections
- connection dimension: DN15

Alternative products:

- Single lever bidet mixer 70 with metal pop-up waste set — Chrome | 71203000 | 95.80



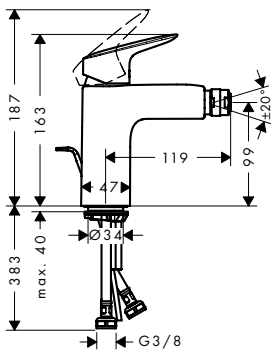

Single lever bidet mixer 100 with pop-up waste set

Chrome | 71200000 | 111.20

AirPower

- consists of: single lever bidet mixer, waste set
- projection 119 mm
- aerator with ball pivot
- spray type: normal spray
- maximum flow rate at 3 bar: 7,2 l/min
- ceramic cartridge
- temperature limitation adjustable
- suitable for continous flow water heaters
- material waste set: synthetic
- connection type: G ⅜ connections
- connection dimension: DN15

NEW



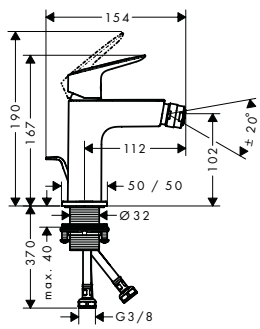

Single lever bidet mixer 110 Fine with pop-up waste set

Chrome | 71201000 | 109.00

AirPower | Comfort Zone

- consists of: single lever bidet mixer, waste set
- projection 112 mm
- aerator with ball pivot
- spray type: normal spray
- maximum flow rate at 3 bar: 5 l/min
- ceramic cartridge
- temperature limitation adjustable
- suitable for continous flow water heaters
- material waste set: synthetic
- connection type: G ⅜ connections
- connection dimension: DN15

Measurements within scale drawings are in mm.

	finish	code no.	Euro



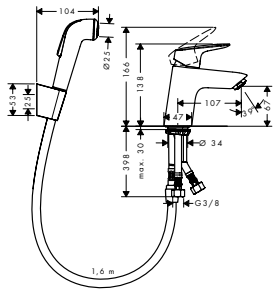

Single lever basin mixer with bidette hand shower and shower hose 160 cm

Chrome | 71290000 | 128.80

AirPower · EcoSmart · Comfort Zone · Quick Clean

- consists of: single lever basin mixer, bidette hand shower, shower holder, shower hose
- ComfortZone 70
- maximum flow rate at 3 bar: 5 l/min
- ceramic cartridge
- temperature limitation adjustable
- suitable for continuous flow water heaters
- connection type: G ⅜ connections
- connection dimension: DN15



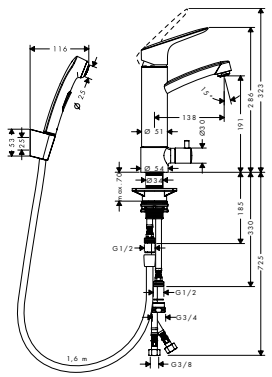

Single lever basin mixer with device shut-off valve with bidette hand shower and shower hose 160 cm

Chrome | 31515000 | 321.70

AirPower · Comfort Zone · Quick Clean

- consists of: single lever basin mixer, bidette hand shower, shower holder, shower hose
- ComfortZone 190
- swivel range 120°
- maximum flow rate at 3 bar: 9,7 l/min
- ceramic cartridge
- temperature limitation adjustable
- connection type: G ⅜ connections
- connection dimension: DN15



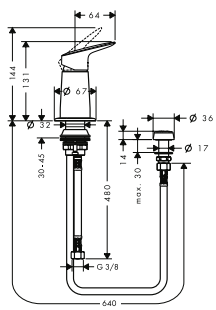

Bidet set with vertical spray

Chrome | 71629000 | 123.80

EcoSmart

- consists of: Bidet mixer, vertical spray
- maximum flow rate at 3 bar: 7,7 l/min
- ceramic cartridge
- vertical spray and diverter
- integrated non-return valve
- efficient from 0,5 bar onwards
- connection type: G ⅜ connections
- connection dimension: DN15

Bath



Single lever bath mixer for exposed installation

Chrome | 71400000 | 117.10

AirPower

- 2 functions
- projection 194 mm
- connection type: s-shaped connections
- centre distance: 150 ± 12 mm
- spray type mixer: normal spray
- flow rate for bath spout at 3 bar: 20 l/min
- flow rate of hand shower at 3 bar: 17 l/min
- ceramic cartridge
- temperature limitation adjustable
- diverter with automatic resetting
- non-return valve
- with silencer
- suitable for continous flow water heaters
- connection dimension: DN15

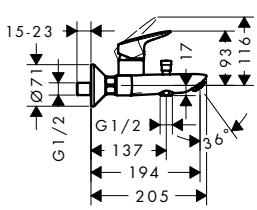

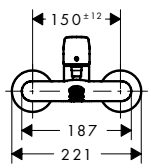

Alternative products:

- Single lever bath mixer for exposed installation with centre distance 15.3 cm — Chrome | 71430000 | 123.00
- Single lever bath mixer for exposed installation with 2 flow rates — Chrome | 71401000 | 117.10

Measurements within scale drawings are in mm.

Technical specifications and units of measure are subject to change.

	finish	code no.	Euro
Single lever bath mixer with long spout · 2 functions · projection 300 mm · connection type: s-shaped connections · centre distance: 150 ± 12 mm · spray type mixer: normal spray · flow rate for bath spout at 3 bar: 16 l/ min · flow rate of hand shower at 3 bar: 7,5 l/ min · ceramic cartridge · temperature limitation adjustable · diverter with automatic resetting · suitable for continous flow water heaters · connection dimension: DN15	Chrome	71402000	160.10



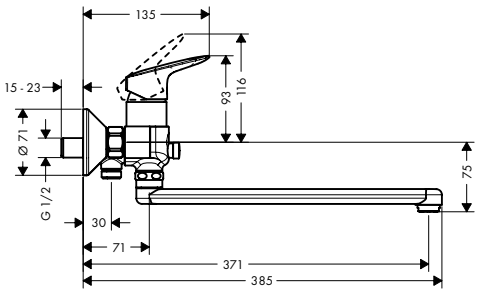

2-handle bath mixer for exposed installation · 2 functions · connection type: s-shaped connections · centre distance: 150 ± 12 mm · flow rate for bath spout at 3 bar: 26 l/ min · flow rate of hand shower at 3 bar: 17 l/ min · ceramic valves hot/ cold 90° · diverter with automatic resetting · non-return valve · with silencer · suitable for continous flow water heaters	Chrome	71243000	134.60



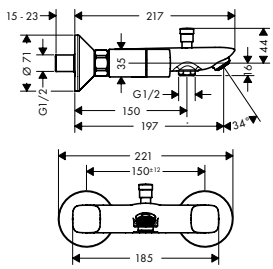

Single lever bath mixer for concealed installation for iBox universal · 2 functions · connection type: basic set · flow rate upper outlet: 21 l/ min · flow rate lower outlet: 29 l/ min · ceramic cartridge · temperature limitation adjustable · diverter with automatic resetting	Chrome	71405000	123.00
Alternative products: · Single lever bath mixer for concealed installation with integrated security combination according to EN1717 for iBox universal	Chrome	71407000	193.10
Required parts: · Basic set iBox universal		01800180	137.30



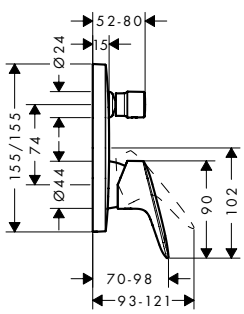

Measurements within scale drawings are in mm.

	finish	code no.	Euro
Basic set iBox universal · suitable for all shower, bath tub and thermostat finish sets for concealed installation · connection thread Rp ¾ · rotationally-symmetric installation · sound-decoupled installation · connection dimension: DN20		01800180	137.30
Alternative products:			
· Basic set iBox universal with shut-off unit		01850180	178.40
Optional parts:			
· Extension iBox universal basic set 2.5 cm		13595000	50.40
· Fastening rail set for iBox universal		96615000	35.80
· Assembly aid for iBox universal		93500000	13.00
Single lever bath mixer for concealed installation · 2 functions · connection type: basic set · ceramic cartridge · temperature limitation adjustable · diverter with automatic resetting	Chrome	71406000	43.80
Required parts:			
· Basic set for single lever bath mixer for concealed installation		31741180	124.50
Basic set for single lever bath mixer for concealed installation · ceramic cartridge · temperature limitation adjustable · installation depth: 55 - 83 mm · connection dimension: DN15		31741180	124.50
Optional parts:			
· Extension for basic set for single lever bath mixer for concealed installation		32498000	127.30
Single lever bath mixer set for concealed installation · consists of: Single lever bath mixer, basic set · 2 functions · connection type: basic set · ceramic cartridge	Chrome	71409000	165.30
Consisting of:			
· Single lever bath mixer for concealed installation (# 71406000) · Basic set for single lever bath mixer for concealed installation (# 31741180)			
Bath spout · 1 function · connection type: G ¾ · with escutcheon · projection 195 mm · wall-mounted · maximum flow rate at 3 bar: 21 l/min · connection dimension: DN20 · spray type: normal spray	Chrome	71410000	92.10

Measurements within scale drawings are in mm.

Technical specifications and units of measure are subject to change.

	finish	code no.	Euro
 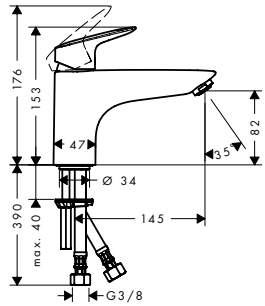			
Single lever bath mixer Monotrou · 1 function · projection 145 mm · connection type: G ⅜ connections · spray type mixer: normal spray · maximum flow rate at 3 bar: 20 l/min · ceramic cartridge · temperature limitation adjustable · non-return valve · suitable for continous flow water heaters · connection dimension: DN15	Chrome	71311000	114.60 AirPower
			
Single lever bath and shower mixer Monotrou · 2 functions · projection 145 mm · connection type: G ⅜ connections · spray type mixer: normal spray · maximum flow rate at 3 bar: 20 l/min · ceramic cartridge · temperature limitation adjustable · diverter with automatic resetting · suitable for continous flow water heaters · connection dimension: DN15	Chrome	71312000	125.20 AirPower
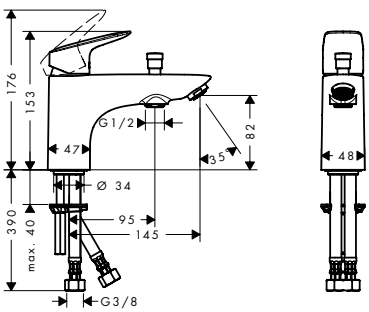			
Alternative products: · Single lever bath and shower mixer Monotrou with 2 flow rates	Chrome	71315000	125.20
			
3-hole rim mounted single lever bath mixer for Secuflex · consists of: 3-hole rim mounted single lever bath mixer, hand shower, shower holder · 2 functions · projection 111 mm · connection type: basic set · spray type mixer: normal spray · spray type hand shower: Rain · maximum pull-out length of hand shower: 1.10 m · flow rate for bath spout at 3 bar: 18 l/min · flow rate of hand shower at 3 bar: 15 l/min · ceramic cartridge · temperature limitation adjustable · non-return valve · connection dimension: DN15	Chrome	71310000	468.20 AirPower
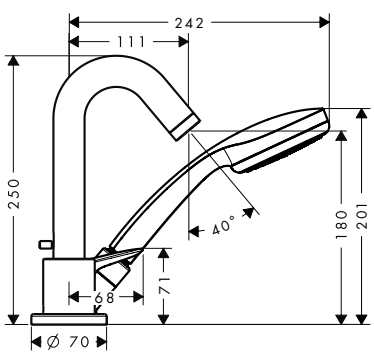			
Consisting of: · Hand shower 1jet (# 28580000)			
Required parts: · Basic set for 3-hole rim mounted single lever bath mixer		13437180	686.60

Measurements within scale drawings are in mm.

	finish	code no.	Euro
 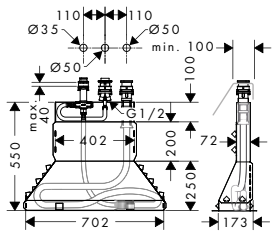			
Basic set for 3-hole rim mounted single lever bath mixer · consists of: basic set, shower hose, Secubox · maximum pull-out length of hand shower: 1.10 m · connection thread: G ½ · connection dimension: DN15		13437180	686.60
Optional parts: · Secuflex insert extension		98806000	4.10
			
3-hole rim mounted single lever bath mixer · consists of: 3-hole rim mounted single lever bath mixer, hand shower · 2 functions · projection 111 mm · connection type: basic set · spray type mixer: normal spray · spray type hand shower: Rain · maximum pull-out length of hand shower: 1.60 m · flow rate for bath spout at 3 bar: 18 l/min · flow rate of hand shower at 3 bar: 15 l/min · ceramic cartridge · temperature limitation adjustable · connection dimension: DN15	Chrome	71313000	326.00 AirPower
Consisting of: · Hand shower 1jet (# 28580000)			
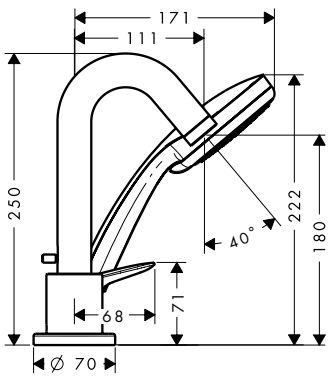			
Required parts: · Basic set for 3-hole rim mounted single lever bath mixer		13439180	350.10
			
Basic set for 3-hole rim mounted single lever bath mixer · consists of: basic set, shower holder, shower hose · maximum pull-out length of hand shower: 1.60 m · maintenance opening required · connection dimension: G ½		13439180	350.10
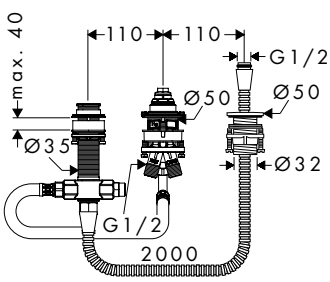			

Measurements within scale drawings are in mm.

Technical specifications and units of measure are subject to change.

	finish	code no.	Euro
4-hole rim mounted bath mixer	Chrome	71314000	326.00



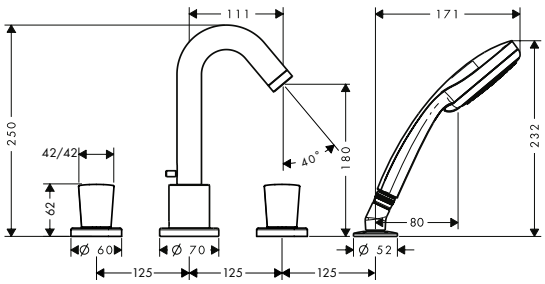

- consists of: 4-hole rim mounted bath mixer, hand shower, shower holder
- 2 functions
- projection 111 mm
- connection type: basic set
- maximum pull-out length of hand shower: 1.60 m
- flow rate for bath spout at 3 bar: 20 l/ min
- flow rate of hand shower at 3 bar: 14 l/ min
- non-return valve
- protected against backflow, according to DIN EN1717
- connection dimension: DN15

Consisting of:
- Hand shower 1jet (# 28580000)

Required parts:

· Basic set for 4-hole rim mounted bath mixer		13244180	289.00



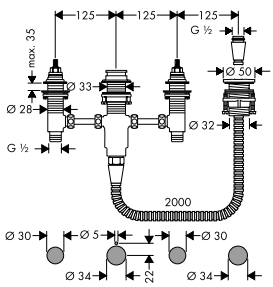

Basic set for 4-hole rim mounted bath mixer		13244180	289.00

- consists of: basic set, shower holder, shower hose
- maximum pull-out length of hand shower: 1.60 m
- maintenance opening required
- suitable for 4-hole rim mounted bath mixer
- connection thread: G ½
- connection dimension: DN15
- ceramic valves hot/ cold 90°

Shower



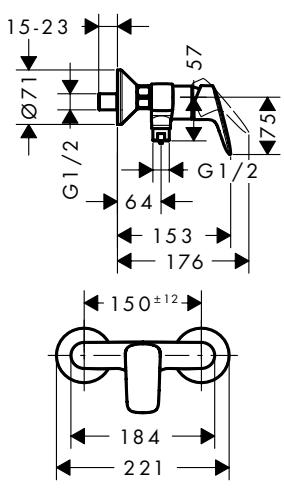

Single lever shower mixer for exposed installation	Chrome	71600000	93.70

- 1 function
- connection type: s-shaped connections
- centre distance: 150 ± 12 mm
- maximum flow rate at 3 bar: 17 l/ min
- flow rate of hand shower at 3 bar: 17 l/ min
- ceramic cartridge
- temperature limitation adjustable
- non-return valve
- with silencer
- hose connection DN15
- connection dimension: DN15

Alternative products:

· Single lever shower mixer for exposed installation with centre distance 15.3 cm	Chrome	71630000	99.60
· Single lever shower mixer for exposed installation with 2 flow rates	Chrome	71601000	93.70

Measurements within scale drawings are in mm.

	finish	code no.	Euro



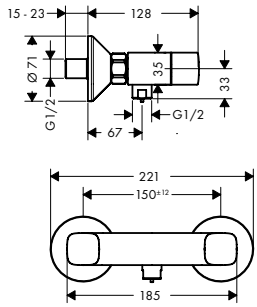

2-handle shower mixer for exposed installation

Chrome — 71263000 — 111.20

- 1 function
- connection type: s-shaped connections
- centre distance: 150 ± 12 mm
- flow rate of hand shower at 3 bar: 17 l/ min
- ceramic valves hot/ cold 90°
- non-return valve
- with silencer
- suitable for continous flow water heaters
- hose connection DN15



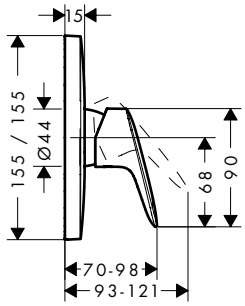

Single lever shower mixer for concealed installation for iBox universal

Chrome — 71605000 — 105.40

- 1 function
- connection type: basic set
- maximum flow rate at 3 bar: 29,3 l/ min
- ceramic cartridge
- temperature limitation adjustable

Required parts:

- Basic set iBox universal — 01800180 — 137.30

Optional parts:

- Extension element — Chrome — 15597000 — 46.70



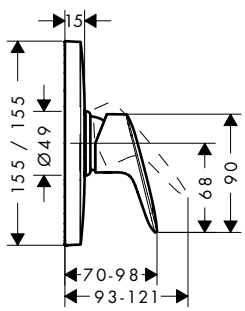

Single lever shower mixer HighFlow for concealed installation for iBox universal

Chrome — 71607000 — 105.40

- 1 function
- maximum flow rate at 3 bar: 47 l/ min
- ceramic cartridge (Highflow)
- temperature limitation adjustable

Required parts:

- Basic set iBox universal with shut-off unit — 01850180 — 178.40
- Basic set iBox universal — 01800180 — 137.30

Optional parts:

- Basic set for Trio diverter valve for concealed installation — 15984180 — 160.90



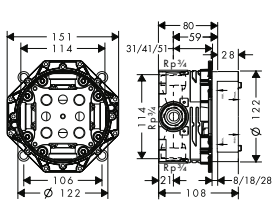

Basic set iBox universal

01800180 — 137.30

- suitable for all shower, bath tub and thermostat finish sets for concealed installation
- connection thread Rp ¾
- rotationally-symmetric installation
- sound-decoupled installation
- connection dimension: DN20

Alternative products:

- Basic set iBox universal with shut-off unit — 01850180 — 178.40

Optional parts:

- Extension iBox universal basic set 2.5 cm — 13595000 — 50.40
- Fastening rail set for iBox universal — 96615000 — 35.80
- Assembly aid for iBox universal — 93500000 — 13.00

Measurements within scale drawings are in mm.

Technical specifications and units of measure are subject to change.

		finish	code no.	Euro
 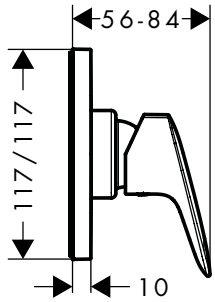	**Single lever shower mixer for concealed installation** · 1 function · connection type: basic set · maximum flow rate at 3 bar: 29 l/min · min. operating pressure: 1 bar · max. operating pressure: 10 bar **Required parts:** · Basic set for single lever shower mixer for concealed installation	Chrome	71604000 13620180	35.10 110.60
 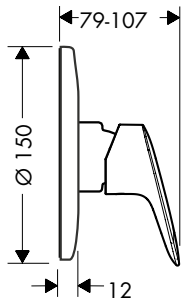	**Single lever shower mixer for concealed installation** · 1 function · connection type: basic set · maximum flow rate at 3 bar: 28,7 l/min · min. operating pressure: 1 bar · max. operating pressure: 10 bar **Required parts:** · Basic set for single lever shower mixer for concealed installation	Chrome	71606000 13620180	35.10 110.60
 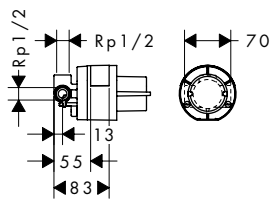	**Basic set for single lever shower mixer for concealed installation** · ceramic cartridge · temperature limitation adjustable · installation depth: 55 - 83 mm · connection dimension: DN15 **Optional parts:** · Extension set for basic set for single lever shower mixer for concealed installation		13620180 32698000	110.60 98.10
 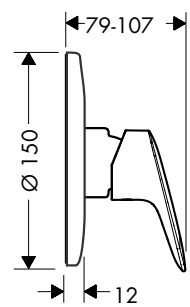	**Shower mixer set for concealed installation** · consists of: single lever shower mixer, basic set · 1 function · connection type: basic set · maximum flow rate at 3 bar: 27 l/min · ceramic cartridge **Consisting of:** · Basic set for single lever shower mixer for concealed installation (# 13620180) · Single lever shower mixer for concealed installation (# 71606000)	Chrome	71666000	131.20
Valve				
 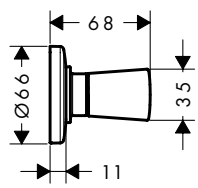	**Shut-off valve for concealed installation** · connection type: DN15/DN20 **Required parts:** · Basic set 52 l/min for shut-off valve for concealed installation spindle · Basic set 40 l/min for shut-off valve for concealed installation ceramic · Basic set 130 l/min for shut-off valve for concealed installation spindle **Optional parts:** · Extension set 2.5 cm	Chrome	71970000 15973180 15974180 15970180 96370000	29.40 84.60 87.90 91.90 48.60

Measurements within scale drawings are in mm.

	finish	code no.	Euro
 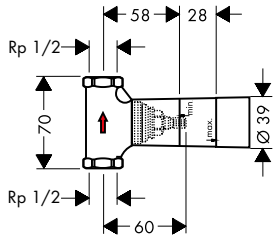			
Basic set 52 l/ min for shut-off valve for concealed installation spindle · connection type: DN15 · suitable for all shut-off valves finish sets · connection dimension: DN15 · maximum flow rate at 3 bar: 52 l/ min		15973180	84.60
Alternative products:			
· Basic set 40 l/ min for shut-off valve for concealed installation ceramic		15974180	87.90
· Basic set 130 l/ min for shut-off valve for concealed installation spindle		15970180	91.90
Optional parts:			
· Extension set 2.5 cm		96370000	48.60
 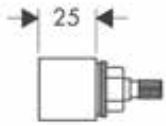			
Extension set 2.5 cm · extension length: 25 mm		96370000	48.60

Measurements within scale drawings are in mm.

Technical specifications and units of measure are subject to change.

Electronic- and project mixers/ Care assortment



Electronic mixers	page 508		CoolStart mixers	page 512	
LowFlow mixers	page 519		Focus Care mixers	page 524	
Unica Comfort shower sets and wall bars	page 526		Unica Comfort Accessories	page 529	
Hand showers	page 530				

Basin - Metris S



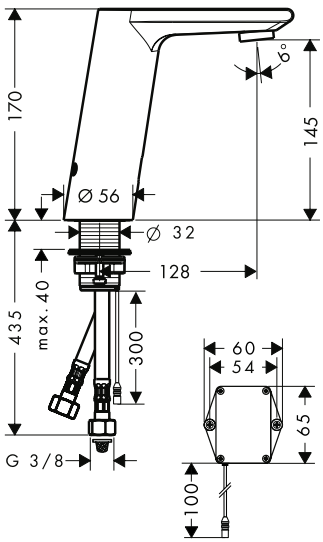

	finish	code no.	Euro
Metris S Electronic basin mixer with temperature control battery operation · ComfortZone 150 · projection 128 mm · spray type: normal spray · maximum flow rate at 3 bar: 5 l/min · temperature limitation adjustable · temperature adjustable via mixer lever on the side · non-return valve · suitable for continous flow water heaters · infrared sensor technology · automatic environmental adjustment of infrared sensor · adjustable optical range of infrared sensor (2 settings) · battery condition indicator available · battery operation 6V (lifetime approx. 2 years, battery included in scope of supply) · flushing time: 10 s · hygiene rinse activatable (automatic water flow) · frequency of hygiene rinse: 24 h · flushing time hygiene rinse: 10 s · permanent rinse activatable (single water flow for 180 seconds, suitable for thermal disinfection) · cleaning mode: manual water stop for washbasin cleaning · connection dimension: DN15 · TÜV certified · dirt filters in the connection hoses	Chrome	31100000	737.70
Alternative products:			
· **Metris S** Electronic basin mixer with temperature pre-adjustment battery operation	Chrome	31101000	680.30
· **Metris S** Electronic basin mixer with temperature control mains connection 230 V	Chrome	31102000	781.90
· **Metris S** Electronic basin mixer with temperature pre-adjustment mains connection 230 V	Chrome	31103000	723.00

Measurements within scale drawings are in mm.

Technical specifications and units of measure are subject to change.

Basin - Focus



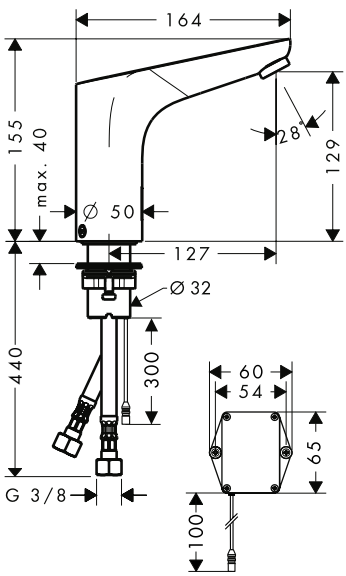

	finish	code no.	Euro
Focus Electronic basin mixer 130 with temperature control battery operation	Chrome	31171000	505.70

Sensor Activation · AirPower · EcoSmart · Comfort Zone

- ComfortZone 130
- projection 127 mm
- spray type: normal spray
- maximum flow rate at 3 bar: 5 l/min
- temperature limitation adjustable
- temperature adjustable via mixer lever on the side
- non-return valve
- suitable for continous flow water heaters
- infrared sensor technology
- automatic environmental adjustment of infrared sensor
- adjustable optical range of infrared sensor (2 settings)
- battery condition indicator available
- battery operation 6V (lifetime approx. 2 years, battery included in scope of supply)
- flushing time: 10 s
- hygiene rinse activatable (automatic water flow)
- frequency of hygiene rinse: 24 h
- flushing time hygiene rinse: 10 s
- permanent rinse activatable (single water flow for 180 seconds, suitable for thermal disinfection)
- cleaning mode: manual water stop for washbasin cleaning
- connection dimension: DN15
- TÜV certified
- dirt filters in the connection hoses

Alternative products:

· **Focus** Electronic basin mixer with temperature pre-adjustment battery operation	Chrome	31172000	459.10
· **Focus** Electronic basin mixer 130 with temperature control mains connection 230 V	Chrome	31173000	529.30
· **Focus** Electronic basin mixer with temperature pre-adjustment mains connection 230 V	Chrome	31174000	506.40

Measurements within scale drawings are in mm.

Basin - Vernis Blend

NEW



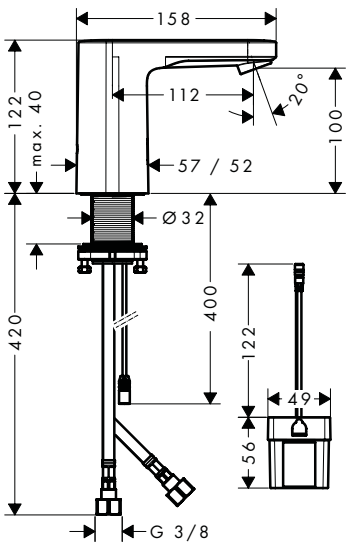

		finish	code no.	Euro
	Vernis Blend Electronic basin mixer with temperature pre-adjustment battery operation · ComfortZone 100 · projection 112 mm · spray type: normal spray · swiveling spray former · temperature pre-adjustable · with isolated water conduction - without contact with nickel and lead · non-return valve · infrared sensor technology · automatic environmental adjustment of infrared sensor · battery condition indicator available · battery operation 6 V Lithium-battery, type CR-P2 (lifetime approx. 7 years, at 150 actuations per day, battery included in scope of supply) · flushing time adjustable · flushing time: 10 s, 20 s, 30 s · hygiene rinse activatable (automatic water flow) · frequency of hygiene rinse: 24 h, 48 h, 72 h · flushing time hygiene rinse: 10 s, 20 s, 30 s · permanent rinse activatable (single water flow for 200 seconds, suitable for thermal disinfection) · cleaning mode: manual water stop for washbasin cleaning · connection dimension: DN15 · dirt filters in the connection hoses · frequency of hygiene rinse and flushing time hygiene rinse are dependent on each other (24 h - 10 s, 48 h - 20 s, 72 h - 30 s)	Chrome	71502000 Sensor Activation · AirPower · Comfort Zone	217.20
	Alternative products:			
NEW	· **Vernis Blend** Electronic basin mixer with temperature pre-adjustment mains connection 230 V	Chrome	71501000	238.90

Measurements within scale drawings are in mm.

Technical specifications and units of measure are subject to change.

		finish	code no.	Euro
NEW	**Vernis Blend** Electronic basin mixer for cold water or pre-adjusted water battery operation	Chrome	71503000	181.00



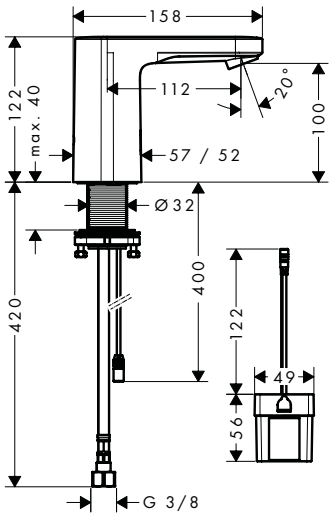

- ComfortZone 100
- projection 112 mm
- spray type: normal spray
- swiveling spray former
- for cold water or pre-adjusted/ conditioned water
- with isolated water conduction - without contact with nickel and lead
- suitable for continous flow water heaters
- infrared sensor technology
- automatic environmental adjustment of infrared sensor
- battery condition indicator available
- battery operation 6 V Lithium-battery, type CR-P2 (lifetime approx. 7 years, at 150 actuations per day, battery included in scope of supply)
- flushing time adjustable
- flushing time: 10 s, 20 s, 30 s
- hygiene rinse activatable (automatic water flow)
- frequency of hygiene rinse: 24 h, 48 h, 72 h
- flushing time hygiene rinse: 10 s, 20 s, 30 s
- permanent rinse activatable (single water flow for 200 seconds, suitable for thermal disinfection)
- cleaning mode: manual water stop for washbasin cleaning
- connection dimension: DN15
- dirt filter in the connection hose
- frequency of hygiene rinse and flushing time hygiene rinse are dependent on each other (24 h - 10 s, 48 h - 20 s, 72 h - 30 s)

Alternative products:

NEW	· **Vernis Blend** Electronic basin mixer for cold water or pre-adjusted water mains connection 230 V	Chrome	71504000	199.10

Measurements within scale drawings are in mm.

Technical specifications and units of measure are subject to change.

CoolStart - Metropol



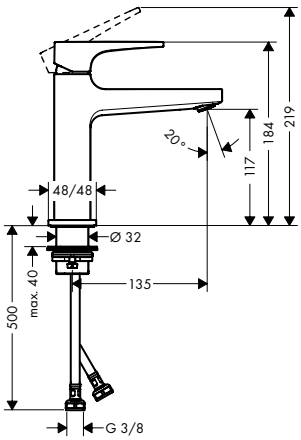

	finish	code no.	Euro
Metropol Single lever basin mixer 110 CoolStart with lever handle and push-open waste set	Chrome	32508000	296.90

AirPower · EcoSmart · Comfort Zone · Quick Clean · CoolStart

- consists of: single lever basin mixer, waste set
- ComfortZone 110
- projection 135 mm
- spray type: normal spray
- maximum flow rate at 3 bar: 5 l/min
- ceramic cartridge
- temperature limitation adjustable
- suitable for continuous flow water heaters
- push-open waste set G 1¼
- material waste set: metal
- connection type: G ⅜ connections
- connection dimension: DN15
- cold water in middle position

Alternative products:

· **Metropol** Single lever basin mixer 110 with lever handle and pop-up waste set	Chrome	32506000	285.60
· **Metropol** Single lever basin mixer 110 with lever handle and push-open waste set	Chrome	32507000	291.20
	Brushed Bronze	32507140	436.90
	Brushed Black Chrome	32507340	436.90
	Matt Black	32507670	407.80
	Matt White	32507700	407.80
	Polished Gold Optic	32507990	436.90



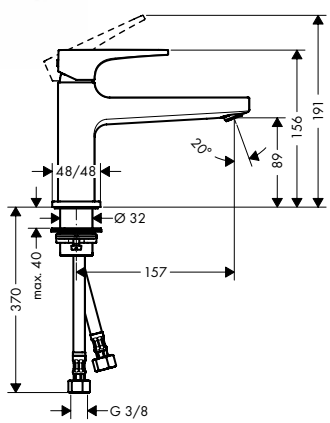

Metropol Single lever basin mixer 100 CoolStart with lever handle and push-open waste set	Chrome	32503000	279.90

AirPower · EcoSmart · Comfort Zone · Quick Clean · CoolStart

- consists of: single lever basin mixer, waste set
- ComfortZone 100
- projection 157 mm
- spray type: normal spray
- maximum flow rate at 3 bar: 5 l/min
- ceramic cartridge
- temperature limitation adjustable
- suitable for continuous flow water heaters
- push-open waste set G 1¼
- material waste set: metal
- connection type: G ⅜ connections
- connection dimension: DN15
- cold water in middle position

Alternative products:

· **Metropol** Single lever basin mixer 100 with lever handle and push-open waste set	Chrome	32502000	274.10

CoolStart - Metris



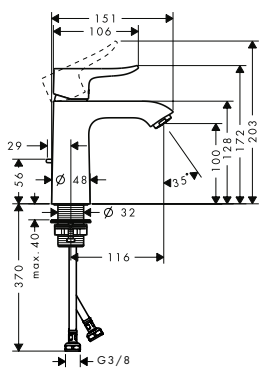

Metris Single lever basin mixer 110 CoolStart with pop-up waste set	Chrome	31121000	253.70

AirPower · EcoSmart · Comfort Zone · Quick Clean · CoolStart

- consists of: single lever basin mixer, waste set
- ComfortZone 110
- spray type: normal spray
- maximum flow rate at 3 bar: 5 l/min
- ceramic cartridge
- temperature limitation adjustable
- suitable for continuous flow water heaters
- pop-up waste set G 1¼
- material waste set: metal
- connection type: G ⅜ connections
- connection dimension: DN15
- cold water in middle position

Measurements within scale drawings are in mm.

Technical specifications and units of measure are subject to change.

CoolStart - Finoris

NEW



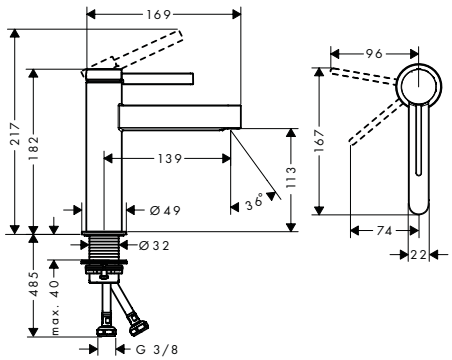

	finish	code no.	Euro
Finoris Single lever basin mixer 110 CoolStart with push-open waste set	Chrome	76024000	200.00
	Matt Black	76024670	280.00
	Matt White	76024700	280.00

EcoSmart · Comfort Zone · CoolStart

- consists of: single lever basin mixer, waste set
- ComfortZone 110
- projection 139 mm
- spray type: laminar spray
- maximum flow rate at 3 bar: 5 l/ min
- ceramic cartridge
- temperature limitation adjustable
- suitable for continuous flow water heaters
- push-open waste set G 1¼
- material waste set: metal
- connection type: G ⅜ connections
- connection dimension: DN15
- cold water in middle position

Alternative products:

NEW

Finoris Single lever basin mixer 110 with pop-up waste set	Chrome	76020000	190.00
	Matt Black	76020670	266.00
	Matt White	76020700	266.00

CoolStart - Vivenis

NEW



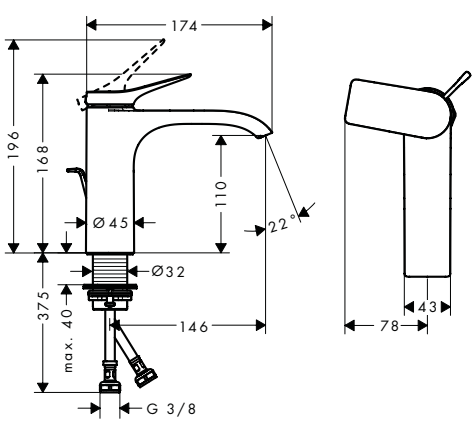

	finish	code no.	Euro
Vivenis Single lever basin mixer 110 CoolStart with pop-up waste set	Chrome	75023000	165.00
	Matt Black	75023670	231.00
	Matt White	75023700	231.00

AirPower · EcoSmart · Comfort Zone · CoolStart

- consists of: single lever basin mixer, waste set
- ComfortZone 110
- projection 146 mm
- spray type: WaterfallStream
- maximum flow rate at 3 bar: 5 l/ min
- ceramic cartridge
- temperature limitation adjustable
- suitable for continuous flow water heaters
- pop-up waste set G 1¼
- material waste set: metal
- connection type: G ⅜ connections
- connection dimension: DN15
- cold water in middle position

Alternative products:

NEW

Vivenis Single lever basin mixer 110 CoolStart without waste set	Chrome	75024000	158.00
	Matt Black	75024670	221.20
	Matt White	75024700	221.20

NEW

Vivenis Single lever basin mixer 110 with pop-up waste set	Chrome	75020000	165.00
	Matt Black	75020670	231.00
	Matt White	75020700	231.00

Measurements within scale drawings are in mm.

Technical specifications and units of measure are subject to change.

CoolStart - Talis E



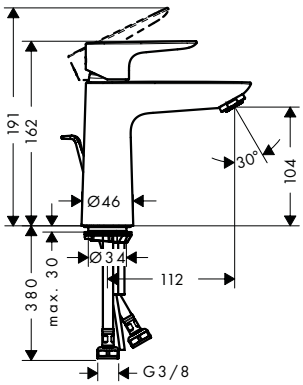

Talis E Single lever basin mixer 110 CoolStart with pop-up waste set

- consists of: single lever basin mixer, waste set
- ComfortZone 110
- projection 112 mm
- spray type: normal spray
- maximum flow rate at 3 bar: 5 l/min
- ceramic cartridge
- temperature limitation adjustable
- suitable for continuous flow water heaters
- pop-up waste set G 1¼
- material waste set: metal
- connection type: G ⅜ connections
- connection dimension: DN15
- cold water in middle position

finish	code no.	Euro
Chrome	71713000	142.30
Brushed Bronze	71713140	213.40
Brushed Black	71713340	213.40
Chrome Matt Black	71713670	199.10
Matt White	71713700	199.10
Polished Gold Optic	71713990	213.40

AirPower · EcoSmart · Comfort Zone · Quick Clean · CoolStart

Alternative products:

- **Talis E** Single lever basin mixer 110 CoolStart without waste set

Chrome	71714000	134.80
Brushed Bronze	71714140	202.30
Brushed Black	71714340	202.30
Chrome Matt Black	71714670	188.70
Matt White	71714700	188.70
Polished Gold Optic	71714990	202.30



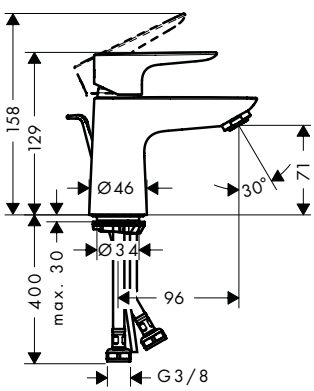

Talis E Single lever basin mixer 80 CoolStart with pop-up waste set

- consists of: single lever basin mixer, waste set
- ComfortZone 80
- projection 96 mm
- spray type: normal spray
- maximum flow rate at 3 bar: 5 l/min
- ceramic cartridge
- temperature limitation adjustable
- suitable for continuous flow water heaters
- pop-up waste set G 1¼
- material waste set: metal
- connection type: G ⅜ connections
- connection dimension: DN15
- cold water in middle position

Chrome	71703000	116.60

AirPower · EcoSmart · Comfort Zone · Quick Clean · CoolStart

Alternative products:

- **Talis E** Single lever basin mixer 80 CoolStart without waste set

Chrome	71704000	109.20

Measurements within scale drawings are in mm.

Technical specifications and units of measure are subject to change.

CoolStart - Talis S



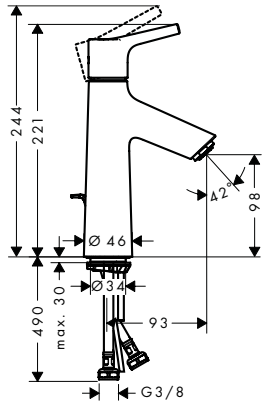

	finish	code no.	Euro
Talis S Single lever basin mixer 100 CoolStart with pop-up waste set · consists of: single lever basin mixer, waste set · ComfortZone 100 · projection 93 mm · spray type: normal spray · maximum flow rate at 3 bar: 5 l/min · ceramic cartridge · temperature limitation adjustable · suitable for continuous flow water heaters · pop-up waste set G 1¼ · material waste set: metal · connection type: G ⅜ connections · connection dimension: DN15 · cold water in middle position	Chrome	72022000	168.00
Alternative products: · **Talis S** Single lever basin mixer 100 CoolStart without waste set	Chrome	72023000	160.60



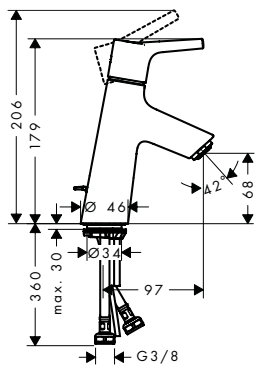

	finish	code no.	Euro
Talis S Single lever basin mixer 80 CoolStart with pop-up waste set · consists of: single lever basin mixer, waste set · ComfortZone 80 · projection 97 mm · spray type: normal spray · maximum flow rate at 3 bar: 5 l/min · ceramic cartridge · temperature limitation adjustable · suitable for continuous flow water heaters · pop-up waste set G 1¼ · material waste set: metal · connection type: G ⅜ connections · connection dimension: DN15 · cold water in middle position	Chrome	72013000	142.30
Alternative products: · **Talis S** Single lever basin mixer 80 CoolStart without waste set	Chrome	72014000	134.80

CoolStart - Focus



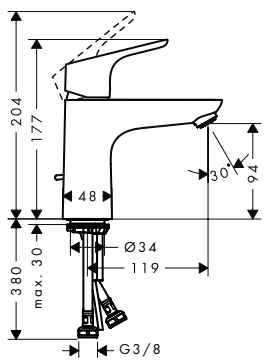

	finish	code no.	Euro
Focus Single lever basin mixer 100 CoolStart with pop-up waste set · consists of: single lever basin mixer, waste set · ComfortZone 100 · projection 119 mm · spray type: normal spray · maximum flow rate at 3 bar: 5 l/min · ceramic cartridge · temperature limitation adjustable · suitable for continuous flow water heaters · pop-up waste set G 1¼ · material waste set: metal · connection type: G ⅜ connections · connection dimension: DN15 · cold water in middle position	Chrome	31621000	138.60
Alternative products: · **Focus** Single lever basin mixer 100 CoolStart without waste set	Chrome	31509000	131.70

Measurements within scale drawings are in mm.

	finish	code no.	Euro



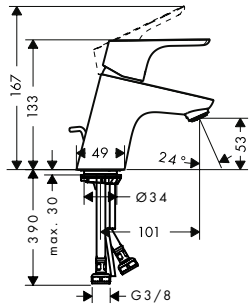

Focus Single lever basin mixer 70 CoolStart
with pop-up waste set

- consists of: single lever basin mixer, waste set
- ComfortZone 70
- projection 101 mm
- spray type: normal spray
- maximum flow rate at 3 bar: 5 l/min
- ceramic cartridge
- temperature limitation adjustable
- suitable for continuous flow water heaters
- pop-up waste set G 1¼
- material waste set: metal
- connection type: G ⅜ connections
- connection dimension: DN15
- cold water in middle position

	finish	code no.	Euro
	Chrome	31539000	112.70

AirPower · EcoSmart · Comfort Zone · Quick Clean · CoolStart

Alternative products:

	finish	code no.	Euro
· **Focus** Single lever basin mixer 70 with pop-up waste set	Chrome	31730000	112.70

CoolStart - Focus Care



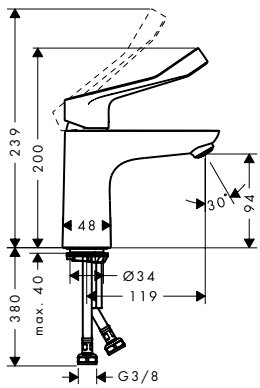

Focus Single lever basin mixer 100 CoolStart
with extra long handle 12,1 cm
without waste set

- ComfortZone 100
- larger print for greater clarity
- with extra long barrier-free handle
- projection 119 mm
- spray type: laminar spray
- maximum flow rate at 3 bar: 5 l/min
- ceramic cartridge
- temperature limitation adjustable
- suitable for continuous flow water heaters
- connection type: G ⅜ connections
- connection dimension: DN15
- cold water in middle position

	finish	code no.	Euro
	Chrome	31917000	145.00

EcoSmart · Comfort Zone · CoolStart

CoolStart - Vernis Blend

NEW



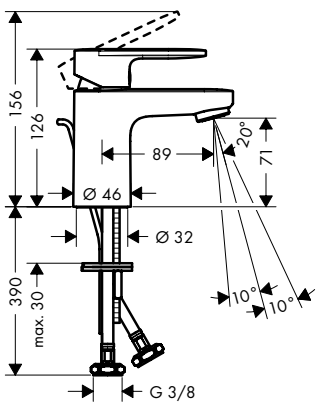

Vernis Blend Single lever basin mixer 70 CoolStart
with pop-up waste set

- consists of: single lever basin mixer, waste set
- ComfortZone 70
- projection 89 mm
- spray type: normal spray
- swiveling spray former
- maximum flow rate at 3 bar: 5 l/min
- ceramic cartridge
- temperature limitation adjustable
- suitable for continuous flow water heaters
- pop-up waste set G 1¼
- material waste set: synthetic
- connection type: G ⅜ connections
- connection dimension: DN15
- cold water in middle position

	finish	code no.	Euro
	Chrome	71584000	67.10
	Matt Black	71584670	93.90

AirPower · EcoSmart · Comfort Zone · CoolStart

Alternative products:

	finish	code no.	Euro
NEW · **Vernis Blend** Single lever basin mixer 70 with pop-up waste set	Chrome	71550000	67.10
	Matt Black	71550670	93.90
NEW · **Vernis Blend** Single lever basin mixer 70 with metal pop-up waste set	Chrome	71557000	77.10
NEW · **Vernis Blend** Single lever basin mixer 70 without waste set	Chrome	71558000	60.10
	Matt Black	71558670	84.10

Measurements within scale drawings are in mm.

Technical specifications and units of measure are subject to change.

CoolStart - Vernis Blend

NEW



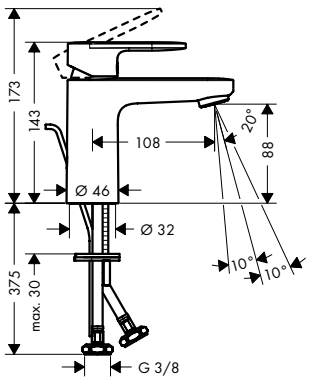

Vernis Blend Single lever basin mixer 100 CoolStart with pop-up waste set

finish	code no.	Euro
Chrome	71585000	87.70
Matt Black	71585670	121.90

AirPower · EcoSmart · Comfort Zone · CoolStart

- consists of: single lever basin mixer, waste set
- ComfortZone 100
- projection 108 mm
- spray type: normal spray
- swiveling spray former
- maximum flow rate at 3 bar: 5 l/ min
- ceramic cartridge
- temperature limitation adjustable
- suitable for continuous flow water heaters
- pop-up waste set G 1¼
- material waste set: synthetic
- connection type: G ⅜ connections
- connection dimension: DN15
- cold water in middle position

Alternative products:

		finish	code no.	Euro
NEW	**Vernis Blend** Single lever basin mixer 100 with pop-up waste set	Chrome	71551000	87.70
		Matt Black	71551670	121.90
NEW	**Vernis Blend** Single lever basin mixer 100 with metal pop-up waste set	Chrome	71559000	97.70
NEW	**Vernis Blend** Single lever basin mixer 100 without waste set	Chrome	71580000	80.70
		Matt Black	71580670	113.00

CoolStart - Vernis Shape

NEW



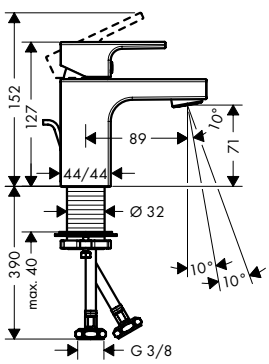

Vernis Shape Single lever basin mixer 70 CoolStart with pop-up waste set

finish	code no.	Euro
Chrome	71593000	80.00
Matt Black	71593670	112.00

AirPower · EcoSmart · Comfort Zone · CoolStart

- consists of: single lever basin mixer, waste set
- ComfortZone 70
- projection 89 mm
- spray type: normal spray
- swiveling spray former
- maximum flow rate at 3 bar: 5 l/ min
- ceramic cartridge
- temperature limitation adjustable
- with isolated water conduction - without contact with nickel and lead
- suitable for continuous flow water heaters
- pop-up waste set G 1¼
- material waste set: synthetic
- connection type: G ⅜ connections
- connection dimension: DN15
- cold water in middle position

Alternative products:

		finish	code no.	Euro
NEW	**Vernis Shape** Single lever basin mixer 70 with pop-up waste set	Chrome	71560000	80.00
		Matt Black	71560670	112.00
NEW	**Vernis Shape** Single lever basin mixer 70 with metal pop-up waste set	Chrome	71566000	90.00
NEW	**Vernis Shape** Single lever basin mixer 70 without waste set	Chrome	71567000	73.00
		Matt Black	71567670	102.20

Measurements within scale drawings are in mm.

		finish	code no.	Euro
NEW	**Vernis Shape** Single lever basin mixer 100 CoolStart with pop-up waste set	Chrome	71594000	105.00
		Matt Black	71594670	147.00



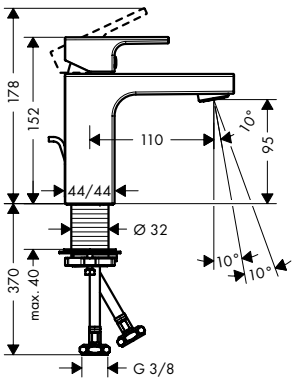

- consists of: single lever basin mixer, waste set
- ComfortZone 100
- projection 110 mm
- spray type: normal spray
- maximum flow rate at 3 bar: 5 l/min
- ceramic cartridge
- temperature limitation adjustable
- with isolated water conduction - without contact with nickel and lead
- suitable for continuous flow water heaters
- pop-up waste set G 1¼
- material waste set: synthetic
- connection type: G ⅜ connections
- connection dimension: DN15
- cold water in middle position

Alternative products:

NEW	· **Vernis Shape** Single lever basin mixer 100 with pop-up waste set	Chrome	71561000	105.00
		Matt Black	71561670	147.00
NEW	· **Vernis Shape** Single lever basin mixer 100 with metal pop-up waste set	Chrome	71568000	115.00
NEW	· **Vernis Shape** Single lever basin mixer 100 without waste set	Chrome	71569000	98.00
		Matt Black	71569670	137.20

CoolStart - Logis

	Logis Single lever basin mixer 70 CoolStart with pop-up waste set	Chrome	71072000	81.90



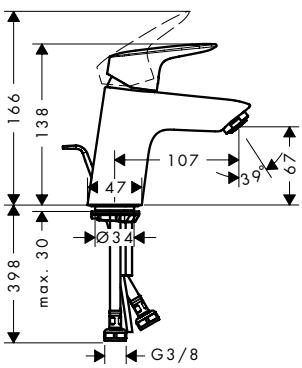

- consists of: single lever basin mixer, waste set
- ComfortZone 70
- projection 107 mm
- spray type: normal spray
- maximum flow rate at 3 bar: 5 l/min
- ceramic cartridge
- temperature limitation adjustable
- suitable for continuous flow water heaters
- pop-up waste set G 1¼
- material waste set: synthetic
- connection type: G ⅜ connections
- connection dimension: DN15
- cold water in middle position

Alternative products:

	· **Logis** Single lever basin mixer 70 CoolStart without waste set	Chrome	71073000	76.10

Measurements within scale drawings are in mm.

Technical specifications and units of measure are subject to change.

	finish	code no.	Euro



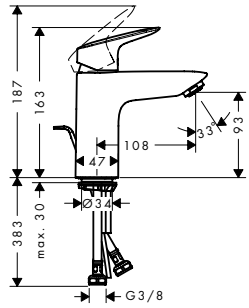

Logis Single lever basin mixer 100 CoolStart
with pop-up waste set

- consists of: single lever basin mixer, waste set
- ComfortZone 100
- projection 108 mm
- spray type: normal spray
- maximum flow rate at 3 bar: 5 l/min
- ceramic cartridge
- temperature limitation adjustable
- suitable for continuous flow water heaters
- pop-up waste set G 1¼
- material waste set: synthetic
- connection type: G ⅜ connections
- connection dimension: DN15
- cold water in middle position

	finish	code no.	Euro
	Chrome	71102000	105.40

Alternative products:

	finish	code no.	Euro
· **Logis** Single lever basin mixer 100 CoolStart without waste set	Chrome	71103000	99.60

NEW



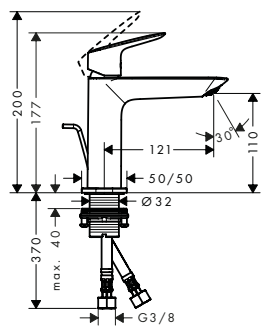

Logis Single lever basin mixer 110 Fine CoolStart
with pop-up waste set

- consists of: single lever basin mixer, waste set
- ComfortZone 110
- projection 121 mm
- spray type: normal spray
- maximum flow rate at 3 bar: 5 l/min
- ceramic cartridge
- temperature limitation adjustable
- suitable for continuous flow water heaters
- pop-up waste set G 1¼
- material waste set: synthetic
- connection type: G ⅜ connections
- connection dimension: DN15
- cold water in middle position

	finish	code no.	Euro
	Chrome	71254000	109.00

Alternative products:

	finish	code no.	Euro
NEW · **Logis** Single lever basin mixer 110 Fine CoolStart without waste set	Chrome	71255000	103.00

LowFlow - Metris



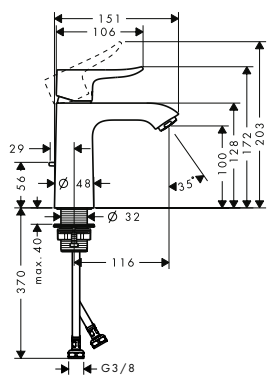

Metris Single lever basin mixer 110 LowFlow
with pop-up waste set

- consists of: single lever basin mixer, waste set
- ComfortZone 110
- projection 116 mm
- spray type: normal spray
- maximum flow rate at 3 bar: 3,5 l/min
- ceramic cartridge
- temperature limitation adjustable
- suitable for continuous flow water heaters
- pop-up waste set G 1¼
- material waste set: metal
- connection type: G ⅜ connections
- connection dimension: DN15

	finish	code no.	Euro
	Chrome	31203000	253.70

Alternative products:

	finish	code no.	Euro
· **Metris** Single lever basin mixer 110 with pop-up waste set	Chrome	31080000	249.40
· **Metris** Single lever basin mixer 110 LowFlow without waste set	Chrome	31204000	247.70

Measurements within scale drawings are in mm.

Technical specifications and units of measure are subject to change.

	finish	code no.	Euro



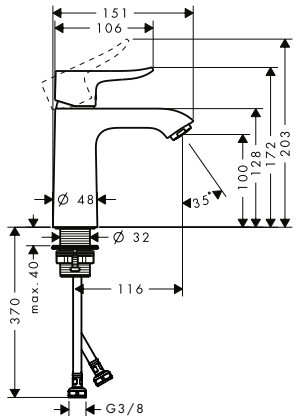

Metris Single lever basin mixer 110 LowFlow without waste set

- ComfortZone 110
- projection 116 mm
- spray type: normal spray
- maximum flow rate at 3 bar: 3,5 l/min
- ceramic cartridge
- temperature limitation adjustable
- suitable for continuous flow water heaters
- connection type: G ⅜ connections
- connection dimension: DN15

	Chrome	31204000	247.70

Alternative products:

· **Metris** Single lever basin mixer 110 with pop-up waste set	Chrome	31080000	249.40



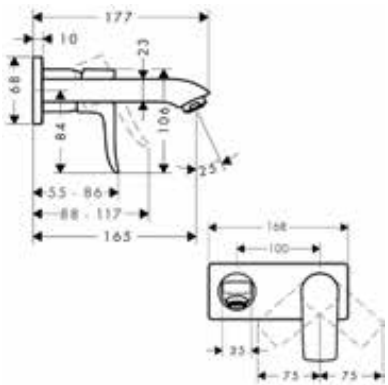

Metris Single lever basin mixer for concealed installation wall-mounted LowFlow 3,5 l/min with spout 16,5 cm

- consists of: single lever basin mixer for concealed installation wall-mounted, waste set
- spray type: normal spray
- maximum flow rate at 3 bar: 3,5 l/min
- ceramic cartridge
- temperature limitation adjustable
- suitable for continuous flow water heaters
- non-closing waste set
- material waste set: metal
- connection type: basic set
- connection dimension: DN15
- handle can be positioned on the right or left, depends on the basic set installation

	Chrome	31251000	304.00

Alternative products:

· **Metris** Single lever basin mixer for concealed installation wall-mounted with spout 16,5 cm	Chrome	31085000	315.40
· **Metris** Single lever basin mixer for concealed installation wall-mounted with spout 22,5 cm	Chrome	31086000	344.60

Required parts:

· Basic set for single lever basin mixer for concealed installation wall-mounted		13622180	220.50

LowFlow - Metris S



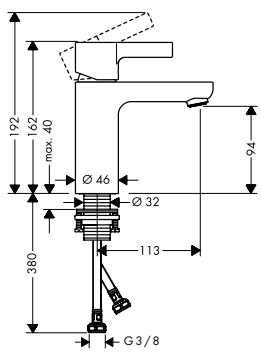

Metris S Single lever basin mixer 100 LowFlow without waste set

- ComfortZone 100
- spray type: normal spray
- maximum flow rate at 3 bar: 1,9 l/min
- ceramic cartridge
- temperature limitation adjustable
- suitable for continuous flow water heaters
- connection type: G ⅜ connections
- connection dimension: DN15

	Chrome	31015000	261.90

Alternative products:

· **Metris S** Single lever basin mixer 100 LowFlow 2 l/min with pop-up waste set	Chrome	31016000	274.50
· **Metris S** Single lever basin mixer 100 without waste set	Chrome	31068000	269.40

Measurements within scale drawings are in mm.

Technical specifications and units of measure are subject to change.

	finish	code no.	Euro



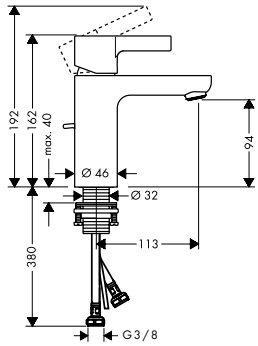

Metris S Single lever basin mixer 100 LowFlow 3.5 l/min with pop-up waste set

- consists of: single lever basin mixer, waste set
- ComfortZone 100
- projection 113 mm
- spray type: normal spray
- maximum flow rate at 3 bar: 3,5 l/min
- ceramic cartridge
- temperature limitation adjustable
- suitable for continuous flow water heaters
- pop-up waste set G 1¼
- material waste set: metal
- connection type: G ⅜ connections
- connection dimension: DN15

	Chrome	31063000	272.30

Alternative products:

· **Metris S** Single lever basin mixer 100 LowFlow 2 l/min with pop-up waste set	Chrome	31016000	274.50

LowFlow - Talis E



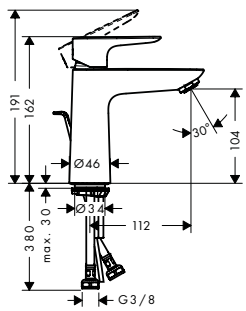

Talis E Single lever basin mixer 110 LowFlow with pop-up waste set

- consists of: single lever basin mixer, waste set
- ComfortZone 110
- projection 112 mm
- spray type: normal spray
- maximum flow rate at 3 bar: 2,7 l/min
- ceramic cartridge
- temperature limitation adjustable
- suitable for continuous flow water heaters
- pop-up waste set G 1¼
- material waste set: metal
- connection type: G ⅜ connections
- connection dimension: DN15

	Chrome	71715000	142.30

Alternative products:

· **Talis E** Single lever basin mixer 110 with pop-up waste set	Chrome	71710000	142.30
	Brushed Bronze	71710140	213.40
	Brushed Black Chrome	71710340	213.40
	Matt Black	71710670	199.10
	Matt White	71710700	199.10
	Polished Gold Optic	71710990	213.40

Measurements within scale drawings are in mm.

Technical specifications and units of measure are subject to change.

	finish	code no.	Euro



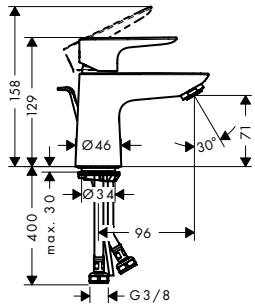

Talis E Single lever basin mixer 80 LowFlow
with pop-up waste set

- consists of: single lever basin mixer, waste set
- ComfortZone 80
- projection 96 mm
- spray type: normal spray
- maximum flow rate at 3 bar: 2,7 l/min
- ceramic cartridge
- temperature limitation adjustable
- suitable for continuous flow water heaters
- pop-up waste set G 1¼
- material waste set: metal
- connection type: G ⅜ connections
- connection dimension: DN15

	finish	code no.	Euro
	Chrome	71705000	116.60

Alternative products:

· **Talis E** Single lever basin mixer 80 with pop-up waste set	Chrome	71700000	116.60

LowFlow - Talis S



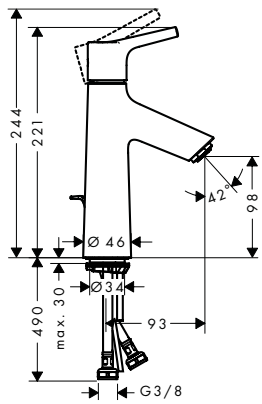

Talis S Single lever basin mixer 100 LowFlow
with pop-up waste set

- consists of: single lever basin mixer, waste set
- ComfortZone 100
- projection 93 mm
- spray type: normal spray
- maximum flow rate at 3 bar: 2,7 l/min
- ceramic cartridge
- temperature limitation adjustable
- suitable for continuous flow water heaters
- pop-up waste set G 1¼
- material waste set: metal
- connection type: G ⅜ connections
- connection dimension: DN15

	finish	code no.	Euro
	Chrome	72024000	168.00

Alternative products:

· **Talis S** Single lever basin mixer 100 with pop-up waste set	Chrome	72020000	168.00
· **Talis S** Single lever basin mixer 100 LowFlow without waste set	Chrome	72025000	160.60



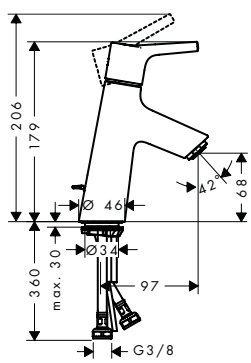

Talis S Single lever basin mixer 80 LowFlow
with pop-up waste set

- consists of: single lever basin mixer, waste set
- ComfortZone 80
- projection 97 mm
- spray type: normal spray
- maximum flow rate at 3 bar: 2,7 l/min
- ceramic cartridge
- temperature limitation adjustable
- suitable for continuous flow water heaters
- pop-up waste set G 1¼
- material waste set: metal
- connection type: G ⅜ connections
- connection dimension: DN15

	finish	code no.	Euro
	Chrome	72015000	142.30

Alternative products:

· **Talis S** Single lever basin mixer 80 with pop-up waste set	Chrome	72010000	142.30
· **Talis S** Single lever basin mixer 80 LowFlow without waste set	Chrome	72018000	134.80

Measurements within scale drawings are in mm.

Technical specifications and units of measure are subject to change.

LowFlow - Focus



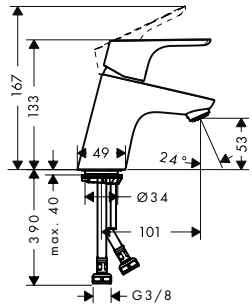

	finish	code no.	Euro
Focus Single lever basin mixer 70 LowFlow without waste set · ComfortZone 70 · projection 101 mm · spray type: normal spray · maximum flow rate at 3 bar: 3,5 l/min · ceramic cartridge · temperature limitation adjustable · suitable for continuous flow water heaters · connection type: G ⅜ connections · connection dimension: DN15	Chrome	31952000	101.00



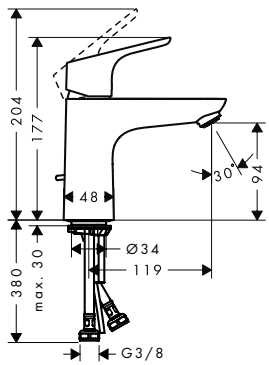

	finish	code no.	Euro
Focus Single lever basin mixer 100 LowFlow with pop-up waste set · consists of: single lever basin mixer, waste set · ComfortZone 100 · projection 119 mm · spray type: normal spray · maximum flow rate at 3 bar: 3,5 l/min · ceramic cartridge · temperature limitation adjustable · suitable for continuous flow water heaters · pop-up waste set G 1¼ · material waste set: metal · connection type: G ⅜ connections · connection dimension: DN15	Chrome	31603000	133.40
Alternative products:			
· **Focus** Single lever basin mixer 100 LowFlow without waste set	Chrome	31513000	126.90

LowFlow - Logis



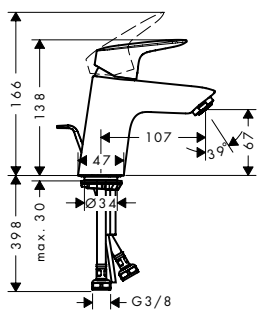

	finish	code no.	Euro
Logis Single lever basin mixer 70 LowFlow with pop-up waste set · consists of: single lever basin mixer, waste set · ComfortZone 70 · projection 107 mm · spray type: normal spray · maximum flow rate at 3 bar: 3,5 l/min · ceramic cartridge · temperature limitation adjustable · suitable for continuous flow water heaters · pop-up waste set G 1¼ · material waste set: synthetic · connection type: G ⅜ connections · connection dimension: DN15	Chrome	71078000	81.90
Alternative products:			
· **Logis** Single lever basin mixer 70 without waste set	Chrome	71071000	76.10
· **Logis** Single lever basin mixer 70 with push-open waste set	Chrome	71077000	81.90
· **Logis** Single lever basin mixer 70 with 2 flow rates without waste set	Chrome	71076000	76.10
· **Logis** Single lever basin mixer 70 with metal pop-up waste set	Chrome	71170000	93.30

Measurements within scale drawings are in mm.

Technical specifications and units of measure are subject to change.

	finish	code no.	Euro



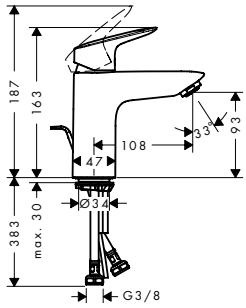

Logis Single lever basin mixer 100 LowFlow with pop-up waste set

- consists of: single lever basin mixer, waste set
- ComfortZone 100
- projection 108 mm
- spray type: normal spray
- maximum flow rate at 3 bar: 3,5 l/min
- ceramic cartridge
- temperature limitation adjustable
- suitable for continuous flow water heaters
- pop-up waste set G 1¼
- material waste set: synthetic
- connection type: G ⅜ connections
- connection dimension: DN15

Chrome — 71104000 — 105.40

AirPower · EcoSmart · Comfort Zone

Alternative products:

- **Logis** Single lever basin mixer 100 with push-open waste set — Chrome — 71107000 — 105.40
- **Logis** Single lever basin mixer 100 with metal pop-up waste set — Chrome — 71171000 — 116.80

Basin - Focus Care



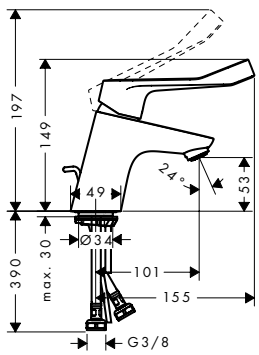

Focus Single lever basin mixer 70 with extra long handle 12,1 cm and pop-up waste set

- consists of: single lever basin mixer, waste set
- ComfortZone 70
- larger print for greater clarity
- with extra long barrier-free handle
- projection 101 mm
- spray type: laminar spray
- maximum flow rate at 3 bar: 5 l/min
- ceramic cartridge
- temperature limitation adjustable
- suitable for continuous flow water heaters
- pop-up waste set G 1¼
- material waste set: metal
- connection type: G ⅜ connections
- connection dimension: DN15

Chrome — 31910000 — 123.70

EcoSmart · Comfort Zone

Alternative products:

- **Focus** Single lever basin mixer 70 with extra long handle without waste set — Chrome — 31914000 — 117.40



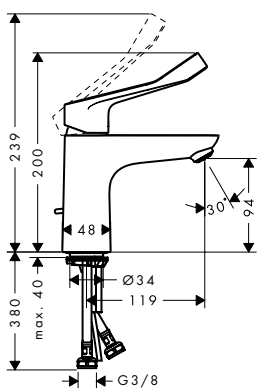

Focus Single lever basin mixer 100 with extra long handle 12,1 cm and pop-up waste set

- consists of: single lever basin mixer, waste set
- ComfortZone 100
- larger print for greater clarity
- with extra long barrier-free handle
- projection 119 mm
- spray type: laminar spray
- maximum flow rate at 3 bar: 5 l/min
- ceramic cartridge
- temperature limitation adjustable
- suitable for continuous flow water heaters
- pop-up waste set G 1¼
- material waste set: metal
- connection type: G ⅜ connections
- connection dimension: DN15

Chrome — 31911000 — 151.80

EcoSmart · Comfort Zone

Alternative products:

- **Focus** Single lever basin mixer 100 with extra long handle without waste set — Chrome — 31915000 — 145.00

Measurements within scale drawings are in mm.

Technical specifications and units of measure are subject to change.

	finish	code no.	Euro



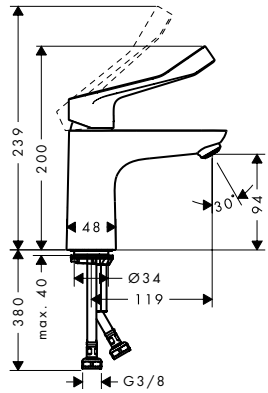

Focus Single lever basin mixer 100 CoolStart with extra long handle 12,1 cm without waste set

Chrome | 31917000 | 145.00

EcoSmart · Comfort Zone · CoolStart

- ComfortZone 100
- larger print for greater clarity
- with extra long barrier-free handle
- projection 119 mm
- spray type: laminar spray
- maximum flow rate at 3 bar: 5 l/min
- ceramic cartridge
- temperature limitation adjustable
- suitable for continuous flow water heaters
- connection type: G ⅜ connections
- connection dimension: DN15
- cold water in middle position



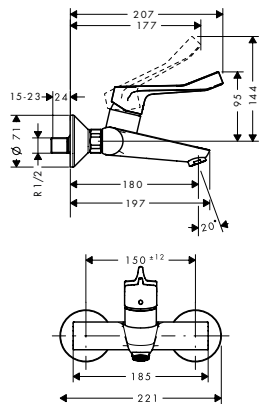

Focus Single lever basin mixer for exposed installation with extra long handle 12,1 cm

Chrome | 31913000 | 158.10

EcoSmart

- larger print for greater clarity
- with extra long barrier-free handle
- projection 180 mm
- centre distance: 150 ± 12 mm
- spray type: laminar spray
- maximum flow rate at 3 bar: 5 l/min
- ceramic cartridge
- temperature limitation adjustable
- with noise reduction
- suitable for continuous flow water heaters
- connection type: s-shaped connections
- connection dimension: DN15

Shower - Focus Care



Focus Single lever shower mixer for exposed installation with extra long handle 12,1 cm

Chrome | 31916000 | 127.50

- larger print for greater clarity
- with extra long barrier-free handle
- 1 function
- connection type: s-shaped connections
- centre distance: 150 ± 12 mm
- maximum flow rate at 3 bar: 34 l/min
- ceramic cartridge
- temperature limitation adjustable
- non-return valve
- with silencer
- hose connection DN15
- connection dimension: DN15

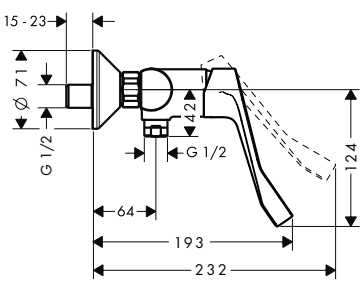

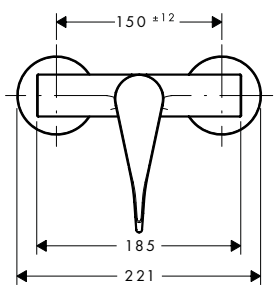

Measurements within scale drawings are in mm.

Unica Comfort shower sets

	finish	code no.	Euro



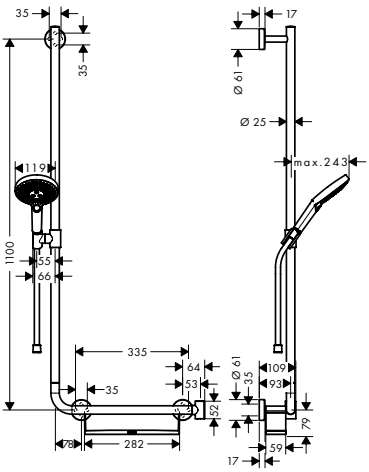

Raindance Select S Shower set 120 3jet with shower bar 110 cm left

Chrome — 26324000 — 412.60

Select · AirPower · Quick Clean · XXL Performance

- consists of: hand shower, shower bar, storage basket, shower hose, slider
- shower head size: 125 mm
- spray type: RainAir, Rain, Whirl
- convenient diversion via Select button
- shelf made of plastic, finish white
- shelf can be removed for cleaning
- 90° position adjustable hand shower holder, pivots left and right, up and down
- maximum flow rate at 3 bar: 15 l/min
- minimum flow pressure: 1 bar
- pivot connector prevent hose from tangling
- wall mounting: screw fastening
- wall supports of metal
- wallbar could be also used as grab bar - load capacity of 200 kg
- stand pipe length: 1100 mm
- shower bar diameter: 25 mm
- profile stand pipe: round
- shower holder can be removed
- metal hand shower holder

Consisting of:
- **Raindance Select S** Hand shower 120 3jet (# 26530000)
- **Unica** Shower bar Comfort 110 cm left (# 26403400)
- **Isiflex** Shower hose 160 cm (# 28276000)

Alternative sizes:

· **Raindance Select S** Shower set 120 3jet with shower bar 110 cm right	Chrome	26326000	412.60

Optional parts:

· **Unica** Foot support Comfort	Chrome	26329000	153.30



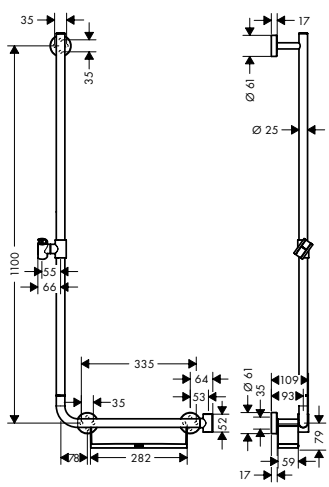

Unica Shower bar Comfort 110 cm left

White/Chrome — 26403400 — 318.20

- consists of: shower bar, storage basket, slider
- infinitely height-adjustable
- shower holder can be removed
- 90° position adjustable hand shower holder, pivots left and right, up and down
- shelf made of plastic, finish white, shelf can be removed for cleaning
- profile stand pipe: round
- shower bar diameter: 25 mm
- metal hand shower holder
- wall supports of metal

Alternative products:

· **Unica** Shower bar Comfort 110 cm right	White/Chrome	26404400	318.20

Optional parts:

· **Unica** Foot support Comfort	Chrome	26329000	153.30

Measurements within scale drawings are in mm.

Technical specifications and units of measure are subject to change.

	finish	code no.	Euro



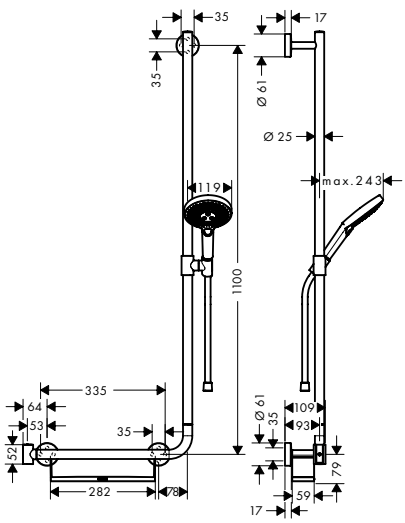

Raindance Select S Shower set 120 3jet with shower bar 110 cm right

Chrome — 26326000 — 412.60

Select · AirPower · Quick Clean · XXL Performance

- consists of: hand shower, shower bar, storage basket, shower hose, slider
- shower head size: 125 mm
- spray type: RainAir, Rain, Whirl
- convenient diversion via Select button
- shelf made of plastic, finish white
- shelf can be removed for cleaning
- 90° position adjustable hand shower holder, pivots left and right, up and down
- maximum flow rate at 3 bar: 15 l/min
- minimum flow pressure: 1 bar
- pivot connector prevent hose from tangling
- wall mounting: screw fastening
- wall supports of metal
- wallbar could be also used as grab bar - load capacity of 200 kg
- stand pipe length: 1100 mm
- shower bar diameter: 25 mm
- profile stand pipe: round
- shower holder can be removed
- metal hand shower holder

Consisting of:
- **Unica** Shower bar Comfort 110 cm right (# 26404400)
- **Raindance Select S** Hand shower 120 3jet (# 26530000)
- **Isiflex** Shower hose 160 cm (# 28276000)

Alternative sizes:

· **Raindance Select S** Shower set 120 3jet with shower bar 110 cm left	Chrome	26324000	412.60

Optional parts:

· **Unica** Foot support Comfort	Chrome	26329000	153.30



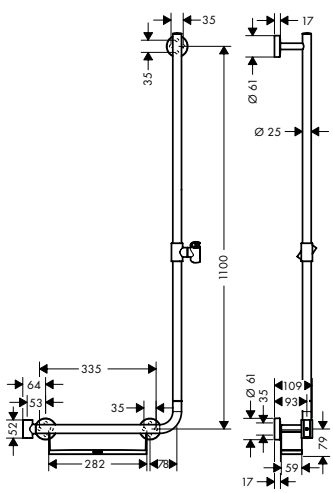

Unica Shower bar Comfort 110 cm right

White/Chrome — 26404400 — 318.20

- consists of: shower bar, storage basket, slider
- infinitely height-adjustable
- shower holder can be removed
- 90° position adjustable hand shower holder, pivots left and right, up and down
- shelf can be removed for cleaning
- profile stand pipe: round
- shower bar diameter: 25 mm
- metal hand shower holder
- hand shower holder with locking mechanism
- wall supports of metal

Alternative products:

· **Unica** Shower bar Comfort 110 cm left	White/Chrome	26403400	318.20

Optional parts:

· **Unica** Foot support Comfort	Chrome	26329000	153.30

Measurements within scale drawings are in mm.

Technical specifications and units of measure are subject to change.

	finish	code no.	Euro



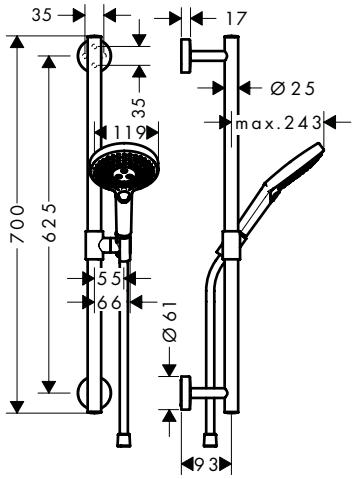

Raindance Select S Shower set 120 3jet with shower bar 65 cm

Chrome 26320000 282.90

Select · AirPower · Quick Clean · XXL Performance

- consists of: hand shower, shower bar, shower hose, slider
- shower head size: 125 mm
- spray type: Rain, RainAir, Whirl
- convenient diversion via Select button
- 90° position adjustable hand shower holder, pivots left and right, up and down
- maximum flow rate at 3 bar: 15 l/min
- minimum flow pressure: 1 bar
- pivot connector prevent hose from tangling
- wall mounting: screw fastening
- wall supports of metal
- wallbar could be also used as grab bar - load capacity of 200 kg
- stand pipe length: 700 mm
- shower bar diameter: 25 mm
- profile stand pipe: round
- metal hand shower holder

Consisting of:

- **Raindance Select S** Hand shower 120 3jet (# 26530000)
- **Unica** Shower bar Comfort 65 cm (# 26401000)
- **Isiflex** Shower hose 160 cm (# 28276000)

Alternative sizes:

· **Raindance Select S** Shower set 120 3jet with shower bar 90 cm	Chrome	26322000	294.70
	White/Chrome	26322400	294.70
· **Raindance Select S** Shower set 120 3jet EcoSmart 9 l/min with shower bar 90 cm	Chrome	26323000	294.70

Optional parts:

· **Unica** Grab handle Comfort with shelf and shower holder	White/Chrome	26328400	149.40
· **Unica** Foot support Comfort	Chrome	26329000	153.30



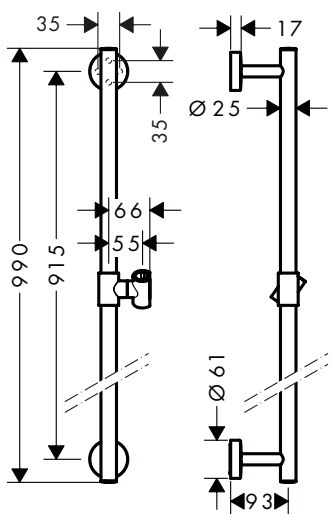

Unica Shower bar Comfort 90 cm

Chrome 26402000 200.30

- consists of: shower bar, slider
- infinitely height-adjustable
- 90° position adjustable hand shower holder, pivots left and right, up and down
- profile stand pipe: round
- shower bar diameter: 25 mm
- metal hand shower holder
- wall supports of metal

Alternative sizes:

· **Unica** Shower bar Comfort 65 cm	Chrome	26401000	188.60

Optional parts:

· **Unica** Grab handle Comfort with shelf and shower holder	White/Chrome	26328400	149.40
· **Unica** Foot support Comfort	Chrome	26329000	153.30

Measurements within scale drawings are in mm.

Technical specifications and units of measure are subject to change.

Unica Comfort grab bar



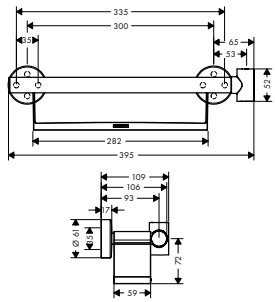

	finish	code no.	Euro
Unica Grab handle Comfort with shelf and shower holder · consists of: grab bar, shelf, shower holder · TÜV certified · shower holder can be installed on both sides · shower holder can be removed · shelf made of plastic, finish white · shelf can be removed for cleaning · fixed holding position · for hoses with conical nut · handle bar diameter: 25 mm · brass	White/Chrome	26328400	149.40
Optional parts: · **Unica** Foot support Comfort	Chrome	26329000	153.30

Unica Comfort foot rest



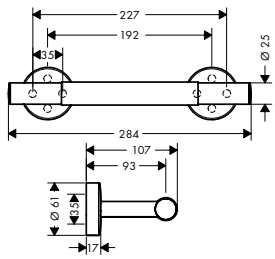

	finish	code no.	Euro
Unica Foot support Comfort · TÜV certified · antislip foot rest · metal	Chrome	26329000	153.30

Thermostatic mixers



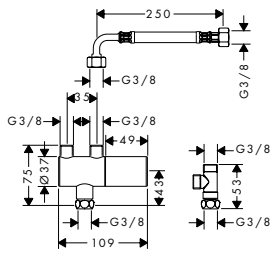

	finish	code no.	Euro
Ecostat Under-basin thermostat for exposed installation · temperature limitation adjustable · the thermostat offers the possibility for thermal disinfection · non-return valve · connection dimension: G ⅜ · min. operating pressure: 1 bar · max. operating pressure: 5 bar	Chrome	15346000	277.40



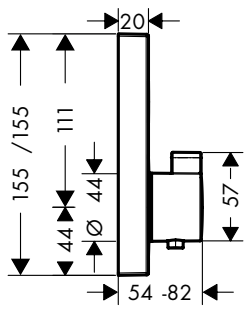

	finish	code no.	Euro
ShowerSelect Thermostat for concealed installation for 1 function · 1 function · Select push-button on/off control for 1 outlet · maximum flow rate at 3 bar: 26,7 l/min · thermostat cartridge, Start/stop valve to operate the functions · safety lock at 40 °C · temperature limitation adjustable · connection type: basic set · min. operating pressure: 1 bar · max. operating pressure: 10 bar · Thermostat is delivered with button On/ Off	Chrome	15762000	*574.50*
Required parts: · Basic set iBox universal		01800180	137.30
Optional parts: · **ShowerSelect** Extension element · Extension iBox universal basic set 2.5 cm	Chrome	13593000 13595000	46.80 50.40

Measurements within scale drawings are in mm.

	finish	code no.	Euro
Basic set iBox universal · suitable for all shower, bath tub and thermostat finish sets for concealed installation · connection thread Rp ¾ · rotationally-symmetric installation · sound-decoupled installation · connection dimension: DN20		01800180	137.30
Alternative products:			
· Basic set iBox universal with shut-off unit		01850180	178.40
Optional parts:			
· Extension iBox universal basic set 2.5 cm		13595000	50.40
· Fastening rail set for iBox universal		96615000	35.80
· Assembly aid for iBox universal		93500000	13.00



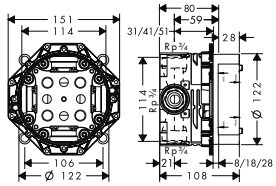

Hand showers

Raindance Select S Hand shower 120 3jet PowderRain Green · shower head size: 125 mm · spray type: PowderRain, Rain, Whirl · convenient diversion via Select button · easy cleanable plastic spray disc · maximum flow rate at 3 bar: 5,7 l/ min · with internal water conduction · rinseable screen seal · connection thread G ½ · connection dimension: DN15 · suitable for continous flow water heaters	Chrome	26516000	94.30

NEW



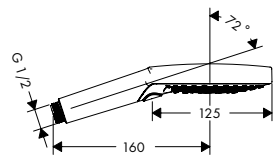

Pulsify S Hand shower 105 1jet Green · shower head size: 105 mm · spray type: PowderRain · spray disc surface: graphite · maximum flow rate at 3 bar: 5,7 l/ min · minimum flow pressure: 1 bar · with internal water conduction · rinseable screen insert · connection thread G ½ · connection dimension: DN15	Chrome Matt Black Matt White	24121000 24121670 24121700	26.50 34.50 34.50

NEW



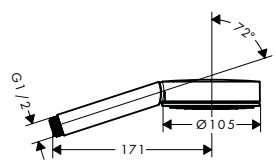

Measurements within scale drawings are in mm.

Technical specifications and units of measure are subject to change.

	finish	code no.	Euro



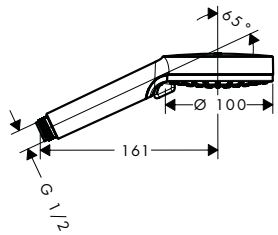

Crometta Hand shower Vario Green 6 l/ min — White/Chrome — 26336400 — 23.40

EcoSmart · Quick Clean · XXL Performance

- shower head size: 100 mm
- spray type: Rain, IntenseRain
- spray type adjustment by turning spray disc
- easy cleanable plastic spray disc
- maximum flow rate at 3 bar: 5,7 l/ min
- minimum flow pressure: 1 bar
- with internal water conduction
- rinseable screen seal
- connection thread G ½
- connection dimension: DN15
- suitable for continous flow water heaters

Water saving EcoSmart version:

- **Crometta** Hand shower Vario EcoSmart 9 l/ min — White/Chrome — 26332400 — 23.40



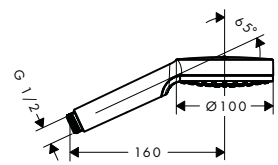

Crometta Hand shower 1jet Green 6 l/ min — White/Chrome — 26334400 — 21.20

EcoSmart · Quick Clean · XXL Performance

- shower head size: 100 mm
- spray type: Rain
- easy cleanable plastic spray disc
- maximum flow rate at 3 bar: 5,7 l/ min
- minimum flow pressure: 1 bar
- with internal water conduction
- rinseable screen seal
- connection thread G ½
- connection dimension: DN15
- suitable for continous flow water heaters



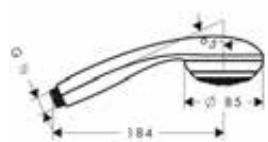

Crometta 85 Hand shower Mono Green 6 l/ min — Chrome — 28561000 — 29.70

EcoSmart · Quick Clean

- shower head size: 85 mm
- spray type: normal spray
- grey spray disc
- maximum flow rate at 3 bar: 6 l/ min
- minimum flow pressure: 1 bar
- with internal water conduction
- rinseable screen seal
- connection thread G ½
- connection dimension: DN15

Measurements within scale drawings are in mm.

Technical specifications and units of measure are subject to change.

	finish	code no.	Euro



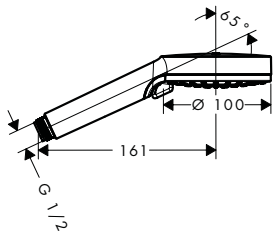

Vernis Blend Hand shower Vario Green — Chrome — 26090000 — 19.50

EcoSmart · Quick Clean · XXL Performance

- shower head size: 100 mm
- spray type: Rain, IntenseRain
- spray type adjustment by turning spray disc
- easy cleanable plastic spray disc
- maximum flow rate at 3 bar: 5,2 l/min
- minimum flow pressure: 1 bar
- with internal water conduction
- rinseable screen seal
- connection thread G ½
- connection dimension: DN15

Alternative products:

NEW

- **Vernis Blend** Hand shower Vario EcoSmart — Chrome — 26340000 — 19.50; Matt Black — 26340670 — 27.30

Bidette



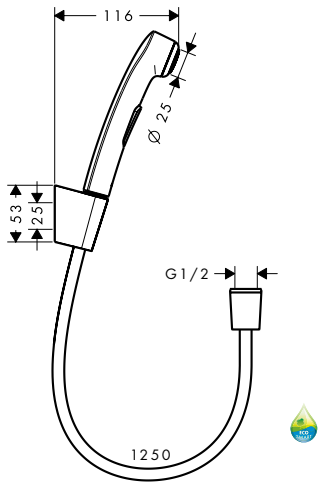

Bidette hand shower 1jet with shower holder and pressure shower hose 125 cm — Chrome — 32129000 — 86.40

EcoSmart · Quick Clean

- consists of: bidette hand shower, shower holder, chrome-colored shower hose
- maximum flow rate at 3 bar: 6 l/min
- minimum flow pressure: 1 bar
- with non-return valve
- we recommend using this product with a shut-off valve in the line
- Shower holder of plastic

Consisting of:

- Shower holder Porter S (# 28331000)

Alternative sizes:

- Bidette hand shower 1jet with shower holder and pressure shower hose 160 cm — Chrome — 32128000 — 88.30

Shower sets



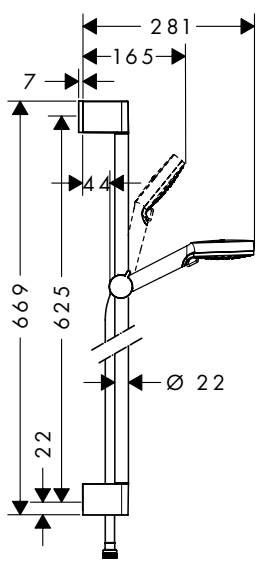

Crometta Shower set Vario Green 6 l/min with shower bar 65 cm — White/Chrome — 26555400 — 54.10

EcoSmart · Quick Clean · XXL Performance

- consists of: hand shower, shower bar, shower hose, slider
- shower head size: 100 mm
- spray type: Rain, IntenseRain
- spray type adjustment by turning spray disc
- hand shower holder inclination angle can be adjusted by 45°
- maximum flow rate at 3 bar: 6 l/min
- minimum flow pressure: 1 bar
- pivot connector prevent hose from tangling
- wall supports of plastic
- shower bar diameter: 22 mm
- profile stand pipe: round

Consisting of:

- **Unica** Shower bar Croma 65 cm (# 26505000)
- **Crometta** Hand shower Vario Green 6 l/min (# 26336400)
- **Isiflex** Shower hose 160 cm (# 28276000)

Optional parts:

- Wall bar spacer — Chrome — 97450000 — 8.70

Measurements within scale drawings are in mm.

Technical specifications and units of measure are subject to change.

	finish	code no.	Euro



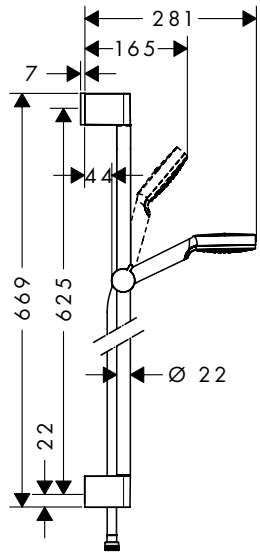

Crometta Shower set 1jet Green 6 l/ min
with shower bar 65 cm

White/Chrome 26554400 51.60

EcoSmart · Quick Clean · XXL Performance

- consists of: hand shower, shower bar, shower hose, slider
- shower head size: 100 mm
- spray type: Rain
- hand shower holder inclination angle can be adjusted by 45°
- maximum flow rate at 3 bar: 6 l/ min
- minimum flow pressure: 1 bar
- pivot connector prevent hose from tangling
- wall supports of plastic
- shower bar diameter: 22 mm
- profile stand pipe: round

Consisting of:
- **Crometta** Hand shower 1jet Green 6 l/ min (# 26334400)
- **Unica** Shower bar Croma 65 cm (# 26505000)
- **Isiflex** Shower hose 160 cm (# 28276000)

Water saving EcoSmart version:
- **Crometta** Shower set 1jet EcoSmart 9 l/ min with shower bar 65 cm — White/Chrome 26535400 51.60

Optional parts:
- Wall bar spacer — Chrome 97450000 8.70



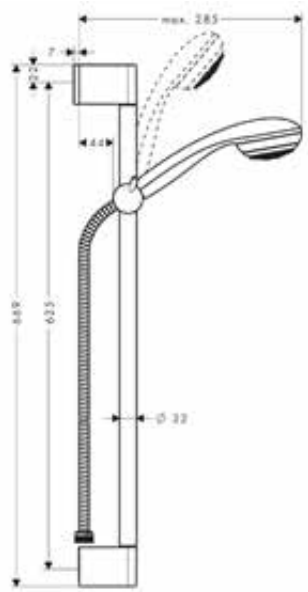

Crometta 85 Shower set Mono Green 6 l/ min
with shower bar 65 cm

Chrome 27652000 69.70

AirPower · EcoSmart · Quick Clean

- consists of: hand shower, shower bar, shower hose, slider
- shower head size: 85 mm
- spray type: normal spray
- 90° position adjustable hand shower holder, pivots left and right, up and down
- maximum flow rate at 3 bar: 6 l/ min
- minimum flow pressure: 1 bar
- wall mounting: screw fastening
- wall supports of plastic
- shower bar diameter: 22 mm
- profile stand pipe: round

Consisting of:
- **Crometta 85** Hand shower Mono Green 6 l/ min (# 28561000)
- **Unica** Shower bar Crometta 65 cm with Metaflex shower hose 160 cm (# 27615000)

Optional parts:
- **Casetta** Soap dish C — Chrome 28678000 15.70
- Wall bar spacer — Chrome 97450000 8.70

Measurements within scale drawings are in mm.

Technical specifications and units of measure are subject to change.

Overhead showers

	finish	code no.	Euro

NEW



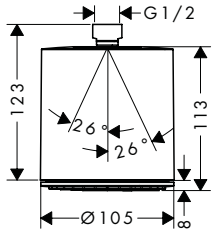

Pulsify S Overhead shower 105 1jet Green

- shower head size: 105 mm
- spray type: PowderRain
- ball-joint: overhead shower angle adjustable
- material spray disc: plastic
- spray disc surface: graphite
- maximum flow rate at 3 bar: 6 l/min
- connection thread G ½
- connection dimension: DN15

Adjustable Shower Head · EcoSmart · Quick Clean · XXL Performance

	finish	code no.	Euro
	Chrome	24132000	85.00
	Matt Black	24132670	110.50
	Matt White	24132700	110.50

Optional parts:

NEW
- **Pulsify** Wall connector for overhead shower 105

Chrome	24139000	50.00
Matt Black	24139670	65.00
Matt White	24139700	65.00



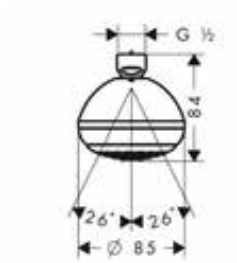

Cromwell 85 Overhead shower 1jet Green 6 l/min

- shower head size: 85 mm
- spray type: normal spray
- ball-joint: overhead shower angle adjustable
- material spray disc: plastic
- grey spray disc
- maximum flow rate at 3 bar: 5,7 l/min
- flow rate normal spray (at 3 bar): 5,7 l/min
- minimum flow pressure: 1 bar
- installation: ceiling or wall
- connection thread G ½
- connection dimension: DN15

EcoSmart · Quick Clean

	finish	code no.	Euro
	Chrome	28423000	45.60

Optional parts:

· Shower arm 12.8 cm	Chrome	27411000	22.60

NEW



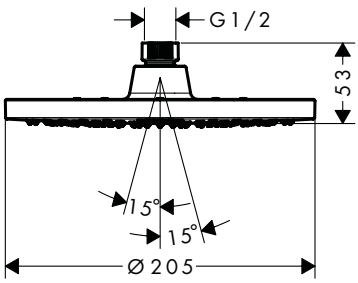

Vernis Blend Overhead shower 200 1jet Green

- shower head size: 205 mm
- spray type: Rain
- ball-joint: overhead shower angle adjustable
- material spray disc: plastic
- maximum flow rate at 3 bar: 5,4 l/min
- minimum flow pressure: 1 bar
- overhead shower removable for cleaning
- installation: ceiling or wall
- connection thread G ½
- connection dimension: DN15

EcoSmart · Quick Clean · XXL Performance

	finish	code no.	Euro
	Chrome	26093000	100.00

Alternative products:

NEW
- **Vernis Blend** Overhead shower 200 1jet EcoSmart

Chrome	26277000	100.00
Matt Black	26277670	140.00

NEW
- **Vernis Blend** Overhead shower 200 1jet LowPressure

Chrome	26095000	100.00

Optional parts:

NEW
- **Vernis Blend** Shower arm 24 cm

NEW
- **Vernis Blend** Ceiling connector 10 cm

NEW
- **Vernis Blend** Ceiling connector 30 cm

Chrome	27809000	47.00
Chrome	27804000	45.00
Chrome	27805000	60.00

Measurements within scale drawings are in mm.

Technical specifications and units of measure are subject to change.

		finish	code no.	Euro
NEW	**Vernis Shape** Overhead shower 230 1jet Green · shower head size: 230 x 170 mm · spray type: Rain · ball-joint: overhead shower angle adjustable · material spray disc: plastic · maximum flow rate at 3 bar: 5,4 l/min · minimum flow pressure: 0,6 bar · overhead shower removable for cleaning · installation: ceiling or wall · connection thread G ½ · connection dimension: DN15	Chrome	26094000	100.00



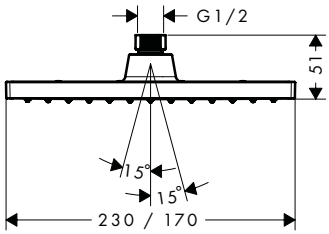

Alternative products:

NEW	· **Vernis Shape** Overhead shower 230 1jet EcoSmart	Chrome	26283000	100.00
		Matt Black	26283670	140.00
NEW	· **Vernis Shape** Overhead shower 200 1jet LowPressure	Chrome	26096000	100.00

Optional parts:

NEW	· **Vernis Shape** Shower arm 24 cm	Chrome	26405000	47.00
NEW	· **Vernis Shape** Ceiling connector 10 cm	Chrome	26406000	45.00
NEW	· **Vernis Shape** Ceiling connector 30 cm	Chrome	26407000	60.00

Showerpipes

NEW	**Vernis Blend** Showerpipe 200 1jet Green with thermostat · consists of: overhead shower, hand shower, shower thermostat, shower hose, slider · overhead shower Vernis Blend 200 1jet · shower head size overhead shower: 205 mm · spray type overhead shower: Rain · ball-joint: overhead shower angle adjustable · spray type hand shower: Rain, IntenseRain · maximum flow rate at 3 bar: 5,7 l/min · minimum flow pressure: 1 bar · operating pressure: min. 1 bar/max. 10 bar · shower bar diameter: 19 mm · height-adjustable slider with locking push-button slider · shower arm length overhead shower: 426 mm · thermostat Vernis · safety lock at 40 °C · adjustable hot water limitation · outlets controlled via turning handle · mounting type: exposed installation · connection dimension DN15 · connection thread G ½ · centre distance 150 ± 12 mm · intrinsically safe against backflow	Chrome	26318000	385.00

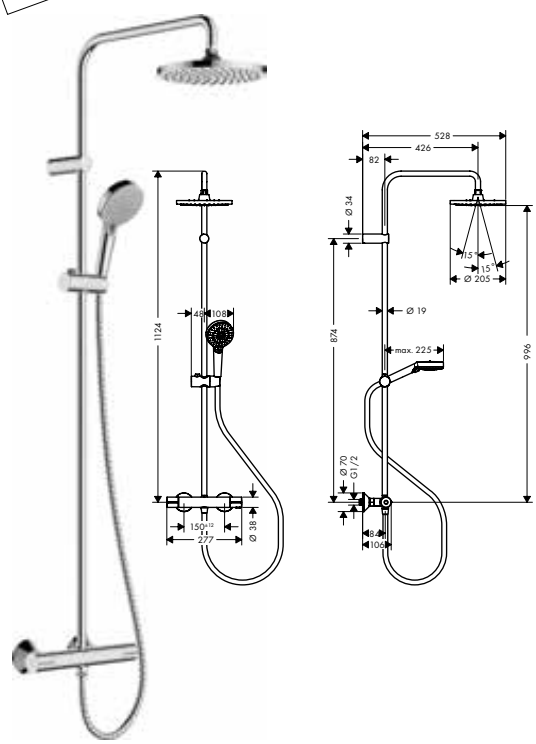

Consisting of:

NEW	· **Vernis Blend** Overhead shower 200 1jet Green (# 26093000)			
NEW	· **Vernis Blend** Hand shower Vario Green (# 26090000)			
	· **Metaflex** Shower hose 160 cm (# 28266000)			

Alternative products:

NEW	· **Vernis Blend** Showerpipe 200 1jet EcoSmart with thermostat	Chrome	26089000	385.00
		Matt Black	26089670	539.00

Measurements within scale drawings are in mm.

Technical specifications and units of measure are subject to change.

	finish	code no.	Euro

NEW



Vernis Shape Showerpipe 230 1jet Green with thermostat

Chrome 26319000 385.00

EcoSmart · Quick Clean · XXL Performance

- consists of: overhead shower, hand shower, shower thermostat, shower hose, slider
- overhead shower Vernis Shape 230 1jet
- shower head size overhead shower: 230 x 170 mm
- spray type overhead shower: Rain
- ball-joint: overhead shower angle adjustable
- spray type hand shower: Rain, IntenseRain
- maximum flow rate at 3 bar: 5,7 l/min
- minimum flow pressure: 1 bar
- operating pressure: min. 1 bar/max. 10 bar
- shower bar diameter: 19 mm
- height-adjustable slider with locking push-button slider
- shower arm length overhead shower: 426 mm
- thermostat Vernis
- safety lock at 40°C
- adjustable hot water limitation
- outlets controlled via turning handle
- mounting type: exposed installation
- connection dimension DN15
- connection thread G ½
- centre distance 150 ± 12 mm

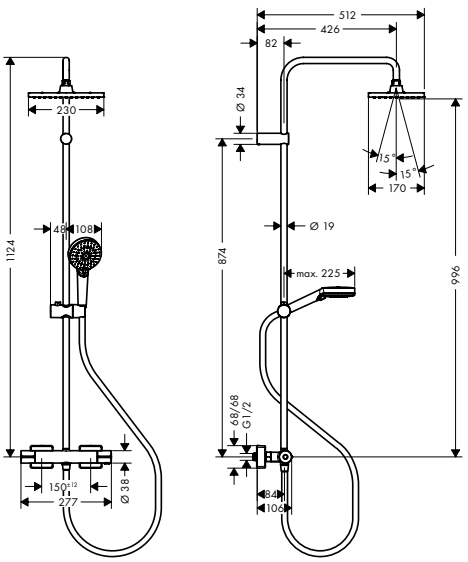

Consisting of:

NEW · **Vernis Shape** Overhead shower 230 1jet Green (# 26094000)

NEW · **Vernis Blend** Hand shower Vario Green (# 26090000)

· **Metaflex** Shower hose 160 cm (# 28266000)

Alternative products:

NEW · **Vernis Shape** Showerpipe 230 1jet EcoSmart with thermostat — Chrome 26097000 385.00; Matt Black 26097670 539.00

Accessories



Quick-coupling set

Black 28346000 12.20

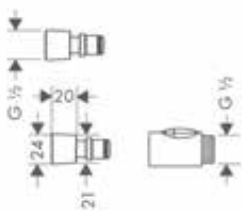

- enables quick and easy changing of hand showers
- material: plastic
- connection dimension DN15

Measurements within scale drawings are in mm.

Technical specifications and units of measure are subject to change.

Accessories



XtraStoris	page 538		Rainfinity	page 541	
Logis	page 541		AddStoris	page 544	
Unica Comfort Accessories	page 550		Logis Universal	page 551	
WallStoris	page 554		RainScent	page 562	

XtraStoris Original

NEW



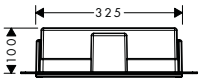

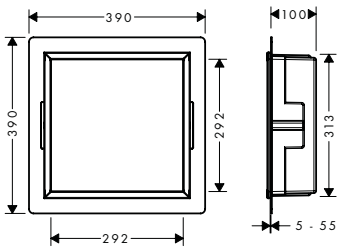

		finish	code no.	Euro
	Wall niche with frame 300/300/100 · consists of: wall niche with frame, installation set, sealing set · installation depth: 100 mm · where to use: new construction, renovation · easy to clean surface · suitable for use in wet areas · wall type: drywall construction, solid wall construction · material installation set: Polystyrene (PS) · material wall niche: Stainless Steel 304 (1.4301) · surface of the wall niche powder-coated stainless steel · dimensions wall niche: 300 x 300 x 100 mm (HxWxD) · required dimensions for installation set: 313 x 325 x 100 mm (HxWxD)	Matt Black Matt White Stainless Steel Optic	56061670 56061700 56061800	393.00 393.00 393.00
	Alternative sizes:			
NEW	· Wall niche with frame 300/150/100	Matt Black Matt White Stainless Steel Optic	56057670 56057700 56057800	346.00 346.00 346.00
NEW	· Wall niche with frame 300/600/100	Matt Black Matt White Stainless Steel Optic	56064670 56064700 56064800	504.00 504.00 504.00
NEW	· Wall niche with frame 300/900/100	Matt Black Matt White Stainless Steel Optic	56067670 56067700 56067800	605.00 605.00 605.00

XtraStoris Minimalistic

NEW



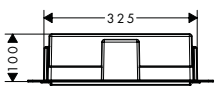

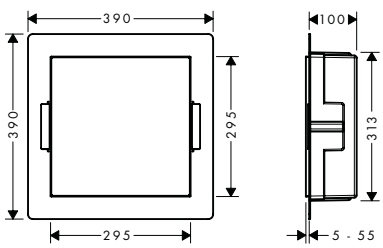

		finish	code no.	Euro
	Wall niche frameless 300/300/100 · consists of: wall niche frameless, installation set, sealing set · installation depth: 100 mm · where to use: new construction, renovation · variable installation depth · easy to clean surface · installable flush with the wall or as a design element sticking out (up to 55 mm) · frameless design · suitable for use in wet areas · easy adjustment to tile thickness · wall type: solid wall construction, drywall construction · material installation set: Polystyrene (PS) · material wall niche: Stainless Steel 304 (1.4301) · dimensions wall niche: 300 x 300 x 100 mm (HxWxD) · required dimensions for installation set: 313 x 325 x 100 mm (HxWxD)	Matt Black Matt White Brushed Stainless Steel	56073670 56073700 56073800	343.00 343.00 343.00
	Alternative sizes:			
NEW	· Wall niche frameless 300/150/100	Matt Black Matt White Brushed Stainless Steel	56070670 56070700 56070800	297.00 297.00 297.00
NEW	· Wall niche frameless 300/150/140	Matt Black Matt White Brushed Stainless Steel	56076670 56076700 56076800	313.00 313.00 313.00
NEW	· Wall niche frameless 300/300/140	Matt Black Matt White Brushed Stainless Steel	56079670 56079700 56079800	363.00 363.00 363.00

Measurements within scale drawings are in mm.

Technical specifications and units of measure are subject to change.

XtraStoris Rock

NEW



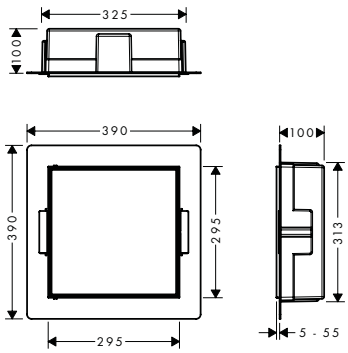

		finish	code no.	Euro
	Wall niche with tileable door 300/300/100 · consists of: wall niche with tileable door, installation set, sealing set · tileable Push-Open door · depth of the tileable door: 12 mm · installation depth: 100 mm · where to use: new construction, renovation · variable installation depth · easy to clean surface · suitable for use in wet areas · easy adjustment to tile thickness · wall type: solid wall construction, drywall construction · material installation set: Polystyrene (PS) · material wall niche: Stainless Steel 304 (1.4301) · dimensions wall niche: 300 x 300 x 100 mm (HxWxD) · required dimensions for installation set: 313 x 325 x 100 mm (HxWxD)	Matt Black Matt White Brushed Stainless Steel	56085670 56085700 56085800	426.00 426.00 426.00
				Variable Installation Depth · Water Damage Protection
	Alternative sizes:			
NEW	· Wall niche with tileable door 300/150/100	Matt Black Matt White Brushed Stainless Steel	56082670 56082700 56082800	379.00 379.00 379.00
NEW	· Wall niche with tileable door 300/150/140	Matt Black Matt White Brushed Stainless Steel	56088670 56088700 56088800	399.00 399.00 399.00
NEW	· Wall niche with tileable door 300/300/140	Matt Black Matt White Brushed Stainless Steel	56091670 56091700 56091800	449.00 449.00 449.00

XtraStoris Individual

NEW



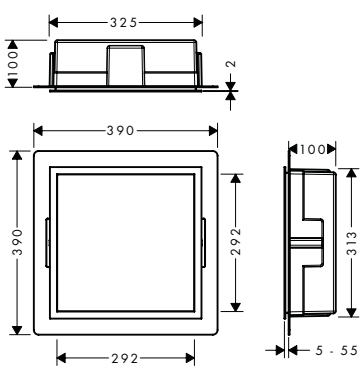

		finish	code no.	Euro
	Wall niche Brushed Stainless Steel with design frame 300/300/100 · consists of: wall niche with design frame, installation set, sealing set · body colour: Brushed Stainless Steel · installation depth: 100 mm · where to use: new construction, renovation · easy to clean surface · suitable for use in wet areas · wall type: solid wall construction, drywall construction · material installation set: Polystyrene (PS) · material wall niche: Stainless Steel 304 (1.4301) · dimensions wall niche: 300 x 300 x 100 mm (HxWxD) · required dimensions for installation set: 313 x 325 x 100 mm (HxWxD)	Brushed Bronze Brushed Black Chrome Matt Black Matt White Brushed Stainless Steel Polished Gold Optic	56097140 56097340 56097670 56097700 56097800 56097990	477.00 477.00 468.00 468.00 432.00 477.00
				Water Damage Protection
	Alternative sizes:			
NEW	· Wall niche Brushed Stainless Steel with design frame 300/150/100	Brushed Bronze Brushed Black Chrome Matt Black Matt White Brushed Stainless Steel Polished Gold Optic	56094140 56094340 56094670 56094700 56094800 56094990	422.00 422.00 413.00 413.00 380.00 422.00

Measurements within scale drawings are in mm.

Technical specifications and units of measure are subject to change.

NEW



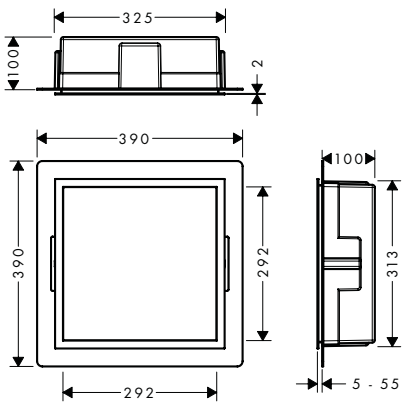

Wall niche Matt Black with design frame 300/300/100

- consists of: wall niche with design frame, installation set, sealing set
- body colour: Matt Black
- installation depth: 100 mm
- where to use: new construction, renovation
- easy to clean surface
- suitable for use in wet areas
- wall type: solid wall construction, drywall construction
- material installation set: Polystyrene (PS)
- material wall niche: Stainless Steel 304 (1.4301)
- dimensions wall niche: 300 x 300 x 100 mm (HxWxD)
- required dimensions for installation set: 313 x 325 x 100 mm (HxWxD)

finish	code no.	Euro
Brushed Bronze	56098140	477.00
Brushed Black Chrome	56098340	477.00
Matt Black	56098670	468.00
Matt White	56098700	468.00
Brushed Stainless Steel	56098800	432.00
Polished Gold Optic	56098990	477.00

Water Damage Protection

Alternative sizes:

NEW

- Wall niche Matt Black with design frame 300/150/100

Brushed Bronze	56095140	422.00
Brushed Black Chrome	56095340	422.00
Matt Black	56095670	413.00
Matt White	56095700	413.00
Brushed Stainless Steel	56095800	380.00
Polished Gold Optic	56095990	422.00

NEW



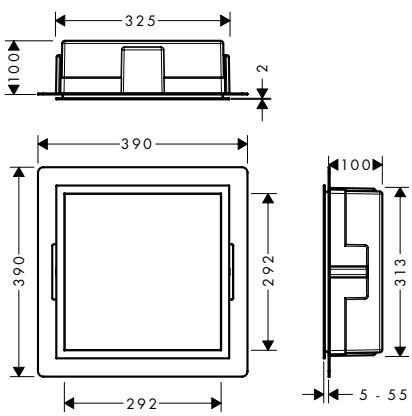

Wall niche Matt White with design frame 300/300/100

- consists of: wall niche with design frame, installation set, sealing set
- body colour: Matt White
- installation depth: 100 mm
- where to use: new construction, renovation
- easy to clean surface
- suitable for use in wet areas
- wall type: solid wall construction, drywall construction
- material installation set: Polystyrene (PS)
- material wall niche: Stainless Steel 304 (1.4301)
- dimensions wall niche: 300 x 300 x 100 mm (HxWxD)
- required dimensions for installation set: 313 x 325 x 100 mm (HxWxD)

finish	code no.	Euro
Brushed Bronze	56099140	477.00
Brushed Black Chrome	56099340	477.00
Matt Black	56099670	468.00
Matt White	56099700	468.00
Brushed Stainless Steel	56099800	432.00
Polished Gold Optic	56099990	477.00

Water Damage Protection

Alternative sizes:

NEW

- Wall niche Matt White with design frame 300/150/100

Brushed Bronze	56096140	422.00
Brushed Black Chrome	56096340	422.00
Matt Black	56096670	413.00
Matt White	56096700	413.00
Brushed Stainless Steel	56096800	380.00
Polished Gold Optic	56096990	422.00

Measurements within scale drawings are in mm.

Technical specifications and units of measure are subject to change.

XtraStoris Safe

NEW



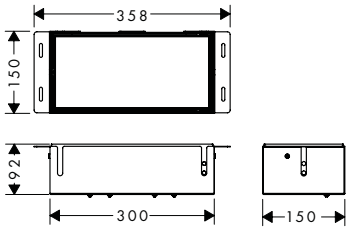

	finish	code no.	Euro
Wall niche with tileable door and integrated shut-off valve 150/300/100	Stainless Steel Optic	56100800	350.00

Water Damage Protection

available from February 2022

- consists of: wall niche with tileable door, shut-off valve, installation set, sealing set
- tileable Push-Open door
- depth of the tileable door: 12 mm
- installation depth: 90 mm
- where to use: new construction, renovation
- easy to clean surface
- wall type: solid wall construction, drywall construction
- material installation set: Polystyrene (PS)
- material wall niche: Stainless Steel 304 (1.4301)
- surface of the wall niche powder-coated stainless steel
- dimensions wall niche: 150 x 300 x 100 mm (HxWxD)
- required dimensions for installation set: 150 x 358 x 92 mm (HxWxD)

Rainfinity



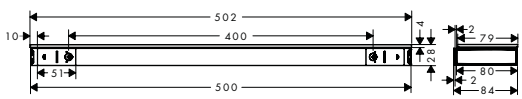

Shelf 500	Chrome	26844000	271.10
	Matt White	26844700	352.30

- wall-mounted
- material frame: solid brass
- material shelf: safety glass
- length: 500 mm
- with mounting material
- concealed fastening
- drilling distance: 400 mm
- diameter drill hole: 6 mm
- surface of the shelf at colour variant -000 = mirror glass, at colour variant -700 = graphite colour, satined

Logis



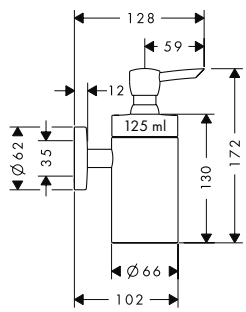

Liquid soap dispenser	Chrome	40514000	122.30
	Brushed Nickel	40514820	183.40

- wall-mounted
- material: matt glass
- material holder: metal
- type of soap: liquid soap
- filling capacity 125 ml
- dosage 1.5 ml
- with mounting material
- concealed fastening
- drilling distance: 35 mm
- diameter drill hole: 6 mm



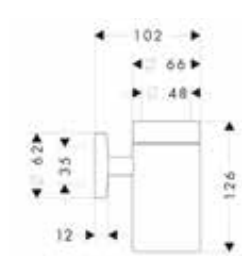

Toothbrush tumbler	Chrome	40518000	76.70
	Brushed Nickel	40518820	115.20

- wall-mounted
- material: matt glass
- material holder: metal
- with mounting material
- concealed fastening
- drilling distance: 35 mm
- diameter drill hole: 6 mm

Measurements within scale drawings are in mm.

Technical specifications and units of measure are subject to change.

	finish	code no.	Euro
Soap dish	Chrome	40515000	76.70
· wall-mounted · material recess: matt glass · material holder: metal · with mounting material · concealed fastening · drilling distance: 35 mm · diameter drill hole: 6 mm	Brushed Nickel	40515820	115.20
Towel hook	Chrome	40511000	18.40
· wall-mounted · material: brass · material holder: metal · with mounting material · concealed fastening · diameter drill hole: 6 mm	Brushed Nickel	40511820	27.60
Towel holder twin-handle	Chrome	40512000	91.70
· wall-mounted · material: brass · material holder: metal · swivelling · length: 445 mm · with mounting material · concealed fastening · drilling distance: 35 mm · diameter drill hole: 6 mm	Brushed Nickel	40512820	137.60
Grab bar	Chrome	40513000	91.70
· wall-mounted · material: metal · material holder: metal · length: 466 mm · with mounting material · concealed fastening · drilling distance: 335 mm · diameter drill hole: 6 mm · TÜV certified	Brushed Nickel	40513820	137.60
Bath towel rail	Chrome	40516000	107.10
· wall-mounted · material: brass · material holder: metal · length: 763 mm · with mounting material · concealed fastening · drilling distance: 600 mm · diameter drill hole: 6 mm	Brushed Nickel	40516820	160.60
Toilettenpapierhalter mit Deckel	Chrome	40523000	76.70
· wall-mounted · material: brass · material holder: metal · with mounting material · concealed fastening · drilling distance: 35 mm · diameter drill hole: 6 mm	Brushed Nickel	40523820	115.20

Measurements within scale drawings are in mm.

Technical specifications and units of measure are subject to change.

	finish	code no.	Euro
Toilet paper holder	Chrome	40526000	61.20
· wall-mounted · material: brass · material holder: metal · with mounting material · concealed fastening · drilling distance: 35 mm · diameter drill hole: 6 mm	Brushed Nickel	40526820	91.90
Toilet brush holder wall-mounted	Chrome	40522000	137.60
· wall-mounted · material: brass · material recess: matt glass · with removable insert · with mounting material · concealed fastening · drilling distance 35 mm · diameter drill hole: 6 mm	Brushed Nickel	40522820	206.50
Optional parts:			
· Replacement toilet brush without stick	Black	40068000	17.60
· Replacement toilet brush without stick	White	40088000	17.60
Spare roll holder	Chrome	40517000	61.20
· wall-mounted · material: brass · with mounting material · concealed fastening · drilling distance: 35 mm · diameter drill hole: 6 mm · for spare rolls	Brushed Nickel	40517820	91.90
Replacement toilet brush with handle	Chrome	40089000	55.40
Replacement toilet brush without stick	White	40088000	17.60

Measurements within scale drawings are in mm.

	finish	code no.	Euro
Replacement toilet brush without stick	Black	40068000	17.60



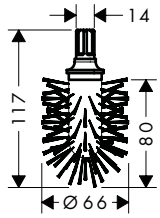

AddStoris

NEW

Corner basket

- wall-mounted
- material holder: metal
- with mounting material
- concealed fastening
- drilling distance: 40 mm
- diameter drill hole: 6 mm
- can be used additional as a shelf

Chrome	41741000	36.70
Brushed Bronze	41741140	55.00
Brushed Black	41741340	58.70
Chrome Matt Black	41741670	51.40
Matt White	41741700	51.40
Polished Gold Optic	41741990	55.00



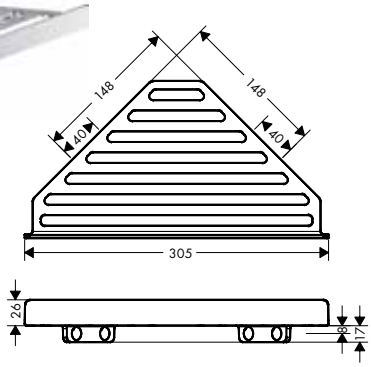

NEW

Towel hook

- wall-mounted
- material: metal
- material holder: metal
- with mounting material
- concealed fastening
- diameter drill hole: 6 mm

Chrome	41742000	9.20
Brushed Bronze	41742140	13.80
Brushed Black	41742340	14.70
Chrome Matt Black	41742670	12.80
Matt White	41742700	12.80
Polished Gold Optic	41742990	13.80



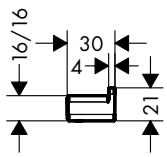

NEW

Towel hook double

- wall-mounted
- material: metal
- material holder: metal
- with mounting material
- concealed fastening
- drilling distance: 50 mm
- diameter drill hole: 6 mm

Chrome	41755000	19.40
Brushed Bronze	41755140	29.00
Brushed Black	41755340	31.00
Chrome Matt Black	41755670	27.10
Matt White	41755700	27.10
Polished Gold Optic	41755990	29.00



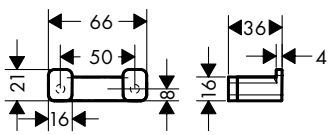

Measurements within scale drawings are in mm.

Technical specifications and units of measure are subject to change.

Bath towel rail



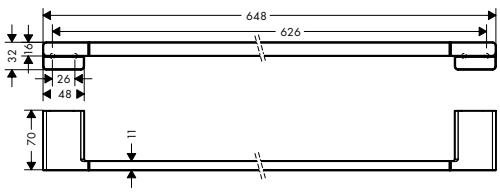

- wall-mounted
- material: metal
- material holder: metal
- length: 648 mm
- with mounting material
- concealed fastening
- drilling distance: 626 mm
- diameter drill hole: 6 mm

finish	code no.	Euro
Chrome	41747000	51.00
Brushed Bronze	41747140	76.40
Brushed Black	41747340	81.50
Chrome Matt Black	41747670	71.30
Chrome Matt White	41747700	71.30
Polished Gold Optic	41747990	76.40

Double bath towel rail



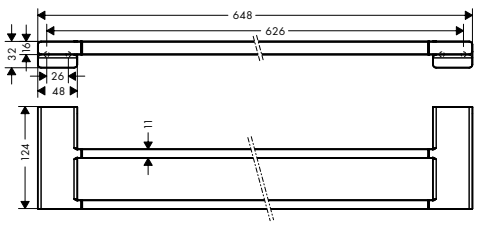

- wall-mounted
- material: metal
- material holder: metal
- length: 648 mm
- with mounting material
- concealed fastening
- drilling distance: 626 mm
- diameter drill hole: 6 mm

finish	code no.	Euro
Chrome	41743000	68.30
Brushed Bronze	41743140	102.40
Brushed Black	41743340	109.20
Chrome Matt Black	41743670	95.60
Chrome Matt White	41743700	95.60
Polished Gold Optic	41743990	102.40

Towel rack with towel holder



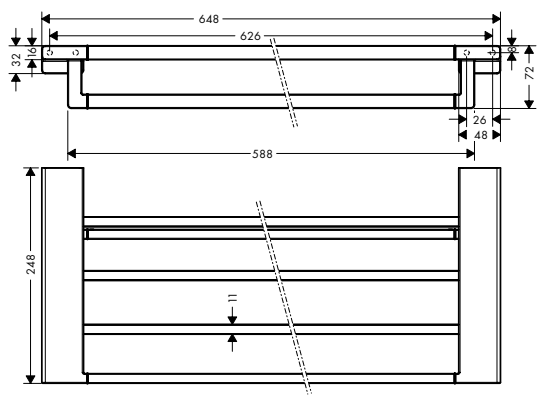

- wall-mounted
- material: metal
- material holder: plastic
- length: 648 mm
- with mounting material
- concealed fastening
- drilling distance: 626 mm
- diameter drill hole: 6 mm

finish	code no.	Euro
Chrome	41751000	142.70
Brushed Bronze	41751140	214.00
Brushed Black	41751340	228.30
Chrome Matt Black	41751670	199.70
Chrome Matt White	41751700	199.70
Polished Gold Optic	41751990	214.00

Towel holder twin-handle



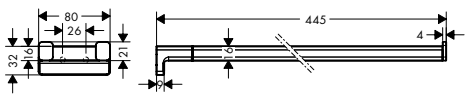

- wall-mounted
- material: metal
- material holder: plastic
- fixed
- length: 445 mm
- with mounting material
- concealed fastening
- drilling distance: 26 mm
- diameter drill hole: 6 mm

finish	code no.	Euro
Chrome	41770000	51.00
Brushed Bronze	41770140	76.40
Brushed Black	41770340	81.50
Chrome Matt Black	41770670	71.30
Chrome Matt White	41770700	71.30
Polished Gold Optic	41770990	76.40

Measurements within scale drawings are in mm.

Technical specifications and units of measure are subject to change.

Towel ring

- wall-mounted
- material: metal
- with mounting material
- concealed fastening
- drilling distance: 26 mm
- diameter drill hole: 6 mm



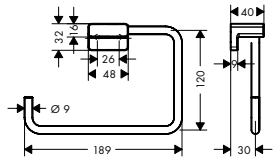

finish	code no.	Euro
Chrome	41754000	31.60
Brushed Bronze	41754140	47.40
Brushed Black	41754340	50.50
Chrome Matt Black	41754670	44.20
Matt White	41754700	44.20
Polished Gold Optic	41754990	47.40

Shower door handle

- material: metal
- material holder: metal
- thickness of glass: 6 - 12 mm
- with mounting material
- concealed fastening
- drilling distance: 350 mm
- diameter drill hole: 6 mm
- can be used simultaneously as a bath towel holder



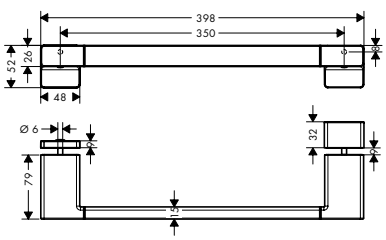

finish	code no.	Euro
Chrome	41759000	68.30
Brushed Bronze	41759140	102.40
Brushed Black	41759340	109.20
Chrome Matt Black	41759670	95.60
Matt White	41759700	95.60
Polished Gold Optic	41759990	102.40

Grab bar

- wall-mounted
- material: metal
- length: 348 mm
- with mounting material
- concealed fastening
- drilling distance: 326 mm
- diameter drill hole: 6 mm
- TÜV certified

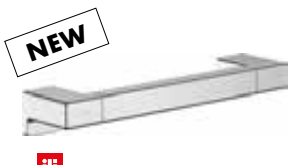

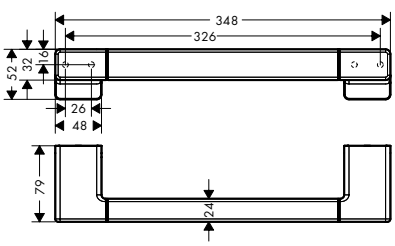

finish	code no.	Euro
Chrome	41744000	51.00
Brushed Bronze	41744140	76.40
Brushed Black	41744340	81.50
Chrome Matt Black	41744670	71.30
Matt White	41744700	71.30
Polished Gold Optic	41744990	76.40

Toilet paper holder

- wall-mounted
- material: metal
- with mounting material
- concealed fastening
- drilling distance: 26 mm
- diameter drill hole: 6 mm

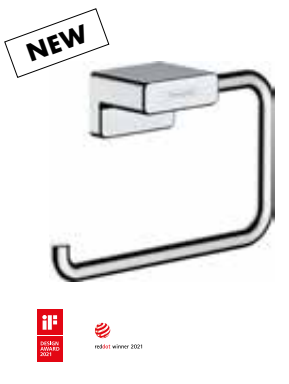

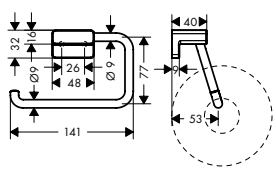

finish	code no.	Euro
Chrome	41771000	35.70
Brushed Bronze	41771140	53.50
Brushed Black	41771340	57.10
Chrome Matt Black	41771670	49.90
Matt White	41771700	49.90
Polished Gold Optic	41771990	53.50

Measurements within scale drawings are in mm.

Technical specifications and units of measure are subject to change.

	finish	code no.	Euro
Toilet paper holder with shelf			
· wall-mounted · material: metal · with mounting material · concealed fastening · drilling distance: 26 mm · diameter drill hole: 6 mm	Chrome	41772000	42.80
	Brushed Bronze	41772140	64.20
	Brushed Black	41772340	68.50
	Chrome Matt Black	41772670	59.90
	Matt White	41772700	59.90
	Polished Gold Optic	41772990	64.20
Toilet paper holder with cover			
· wall-mounted · material: metal · with mounting material · concealed fastening · drilling distance: 26 mm · diameter drill hole: 6 mm	Chrome	41753000	49.90
	Brushed Bronze	41753140	74.90
	Brushed Black	41753340	79.90
	Chrome Matt Black	41753670	69.90
	Matt White	41753700	69.90
	Polished Gold Optic	41753990	74.90
Toilet paper holder double			
· wall-mounted · material: metal · with mounting material · concealed fastening · drilling distance: 26 mm · diameter drill hole: 6 mm · for 2 paper rolls	Chrome	41748000	31.60
	Brushed Bronze	41748140	47.40
	Brushed Black	41748340	50.50
	Chrome Matt Black	41748670	44.20
	Matt White	41748700	44.20
	Polished Gold Optic	41748990	47.40
Spare roll holder			
· wall-mounted · material: metal · with mounting material · concealed fastening · drilling distance: 26 mm · diameter drill hole: 6 mm	Chrome	41756000	31.60
	Brushed Bronze	41756140	47.40
	Brushed Black	41756340	50.50
	Chrome Matt Black	41756670	44.20
	Matt White	41756700	44.20
	Polished Gold Optic	41756990	47.40

Measurements within scale drawings are in mm.

Technical specifications and units of measure are subject to change.

	finish	code no.	Euro
Toilet brush holder wall-mounted			
· wall-mounted	Chrome	41752000	44.80
· material: metal	Brushed Bronze	41752140	67.30
· material recess: matt glass	Brushed Black	41752340	71.70
· with removable insert	Chrome		
· with mounting material	Matt Black	41752670	62.80
· concealed fastening	Matt White	41752700	62.80
· drilling distance 26 mm	Polished Gold Optic	41752990	67.30
· diameter drill hole: 6 mm			
Optional parts:			
· Replacement toilet brush with handle	Chrome	93286000	28.20
Liquid soap dispenser			
· wall-mounted	Chrome	41745000	44.80
· material: matt glass	Brushed Bronze	41745140	67.30
· material holder: metal	Brushed Black	41745340	71.70
· type of soap: liquid soap	Chrome		
· filling capacity 200 ml	Matt Black	41745670	62.80
· dosage 2 ml	Matt White	41745700	62.80
· with mounting material	Polished Gold Optic	41745990	67.30
· concealed fastening			
· drilling distance: 26 mm			
· diameter drill hole: 6 mm			
Soap dish			
· wall-mounted	Chrome	41746000	31.60
· material recess: ceramic	Brushed Bronze	41746140	47.40
· material holder: metal	Brushed Black	41746340	50.50
· with mounting material	Chrome		
· concealed fastening	Matt Black	41746670	44.20
· drilling distance: 26 mm	Matt White	41746700	44.20
· diameter drill hole: 6 mm	Polished Gold Optic	41746990	47.40
Toothbrush tumbler			
· wall-mounted	Chrome	41749000	31.60
· material: matt glass	Brushed Bronze	41749140	47.40
· material holder: metal	Brushed Black	41749340	50.50
· with mounting material	Chrome		
· concealed fastening	Matt Black	41749670	44.20
· drilling distance: 26 mm	Matt White	41749700	44.20
· diameter drill hole: 6 mm	Polished Gold Optic	41749990	47.40

Measurements within scale drawings are in mm.

Technical specifications and units of measure are subject to change.

Sanitary bag dispenser

NEW



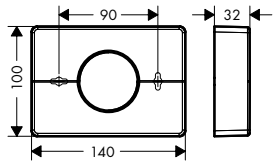

- wall-mounted
- adhesive attachement, screw fastening
- material: plastic
- suitable for: customary sanitary bag boxes
- easy removal of the lid for easy filling
- with mounting material
- concealed fastening
- drilling distance: 90 mm
- diameter drill hole: 6 mm
- horizontal or vertical installation

finish	code no.	Euro
Chrome	41773000	22.40
Brushed Bronze	41773140	33.60
Brushed Black Chrome	41773340	35.90
Matt Black	41773670	31.40
Matt White	41773700	31.40
Polished Gold Optic	41773990	33.60

Tissue box

NEW



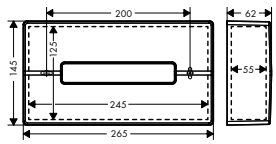

- wall-mounted
- adhesive attachement, screw fastening
- material: plastic
- suitable for customary tissue boxes
- easy removal of the lid for easy filling
- with mounting material
- concealed fastening
- drilling distance 200 mm
- diameter drill hole: 6 mm
- horizontal or vertical installation

finish	code no.	Euro
Chrome	41774000	48.90
Brushed Bronze	41774140	73.40
Brushed Black Chrome	41774340	78.30
Matt Black	41774670	68.50
Matt White	41774700	68.50
Polished Gold Optic	41774990	73.40

Pedal Bin

NEW



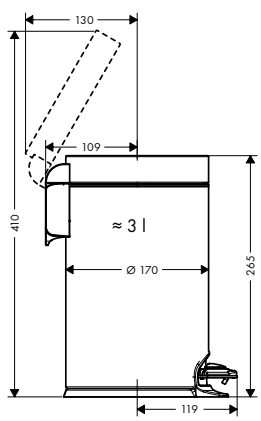

- free-standing
- material: metal
- material recess: plastic
- capacity: 3 l
- with removable insert
- softclose function guarantees a quiet closing of the lid

finish	code no.	Euro
Chrome	41775000	48.90
Matt Black	41775670	68.50
Matt White	41775700	68.50

Measurements within scale drawings are in mm.

Technical specifications and units of measure are subject to change.

	finish	code no.	Euro

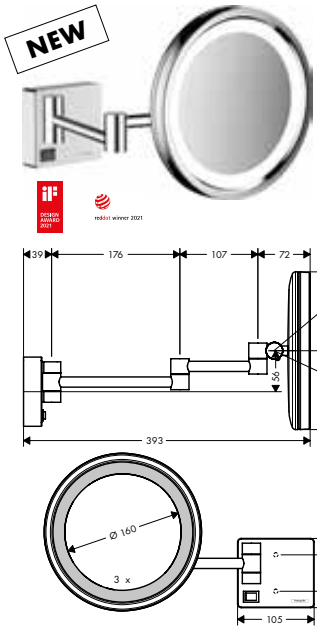

Shaving mirror with LED light

- wall-mounted
- cavity socket required for installation
- material: mirror glass
- material frame: metal
- mirror is inclinable
- swivelling
- enlargement: 3 x magnification
- with lighting
- illuminant: max. 2 W (21 x 0.08 W / LED)
- input voltage:100 - 240 V AC / 50 / 60 Hz
- output voltage: 21 V - DC
- degree of protection: IP20
- with mounting material
- concealed fastening
- drilling distance: 48 mm
- diameter drill hole: 6 mm
- TÜV certified

Chrome	41790000	155.90
Brushed Bronze	41790140	233.90
Brushed Black Chrome	41790340	249.50
Matt Black	41790670	218.30
Matt White	41790700	218.30
Polished Gold Optic	41790990	233.90

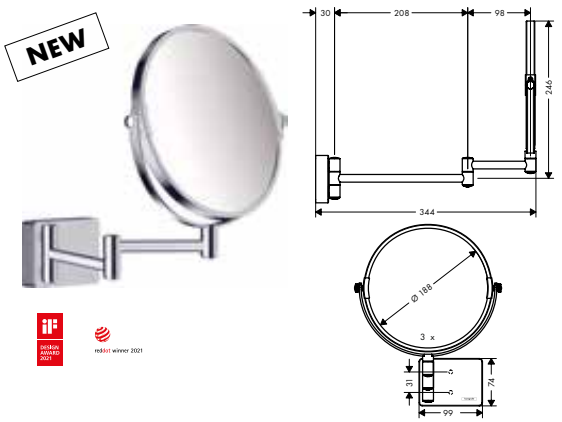

Shaving mirror

- wall-mounted
- material: mirror glass
- material frame: metal
- mirror is inclinable
- swivelling
- enlargement: 1 x magnification, 3 x magnification
- with mounting material
- concealed fastening
- drilling distance: 31 mm
- diameter drill hole: 6 mm

Chrome	41791000	76.40
Brushed Bronze	41791140	149.10
Brushed Black Chrome	41791340	159.00
Matt Black	41791670	107.00
Matt White	41791700	107.00
Polished Gold Optic	41791990	149.10

Unica Comfort grab bar

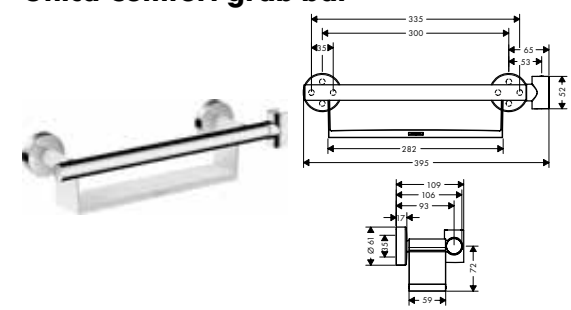

Grab handle Comfort with shelf and shower holder

- consists of: grab bar, shelf, shower holder
- TÜV certified
- shower holder can be installed on both sides
- shower holder can be removed
- shelf made of plastic, finish white
- shelf can be removed for cleaning
- fixed holding position
- for hoses with conical nut
- handle bar diameter: 25 mm
- brass

White/Chrome	26328400	149.40

Optional parts:

- Foot support Comfort

Chrome	26329000	153.30

Unica Comfort foot rest

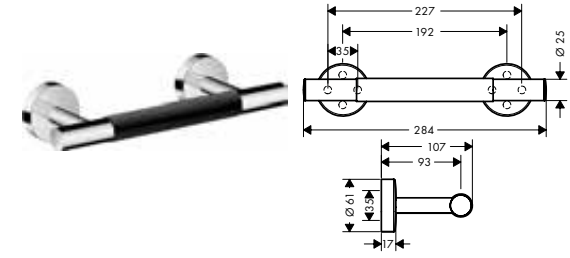

Foot support Comfort

- TÜV certified
- antislip foot rest
- metal

Chrome	26329000	153.30

Measurements within scale drawings are in mm.

Technical specifications and units of measure are subject to change.

Logis Universal Accessories

	finish	code no.	Euro
Toothbrush tumbler · wall-mounted · material: matt glass · material holder: metal · with mounting material · concealed fastening · drilling distance: 26 mm · diameter drill hole: 6 mm	Chrome	41718000	27.70



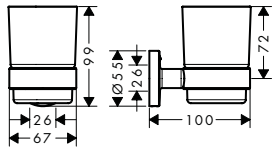

Liquid soap dispenser · wall-mounted · material: matt glass · material holder: metal · type of soap: liquid soap · filling capacity 200 ml · dosage 2 ml · with mounting material · concealed fastening · drilling distance: 26 mm · diameter drill hole: 6 mm	Chrome	41714000	38.80



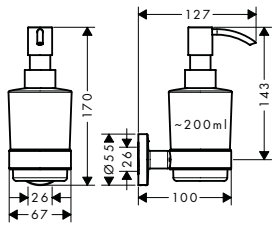

Soap dish · wall-mounted · material recess: matt glass · material holder: metal · with mounting material · concealed fastening · drilling distance: 26 mm · diameter drill hole: 6 mm	Chrome	41715000	27.70



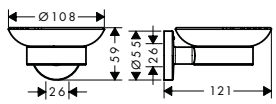

Corner basket · wall-mounted · material holder: metal · with mounting material · concealed fastening · diameter drill hole: 6 mm	Chrome	41710000	27.70



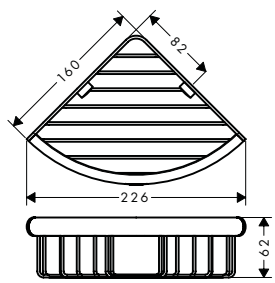

Grab bar · wall-mounted · material: brass · material holder: metal · length: 345 mm · with mounting material · concealed fastening · drilling distance: 300 mm · diameter drill hole: 6 mm · TÜV certified	Chrome	41713000	44.40



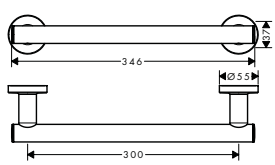

Bath towel rail · wall-mounted · material: brass · material holder: metal · length: 644 mm · with mounting material · concealed fastening · drilling distance: 600 mm · diameter drill hole: 6 mm	Chrome	41716000	44.40



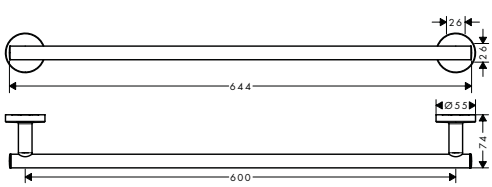

Measurements within scale drawings are in mm.

Technical specifications and units of measure are subject to change.

	finish	code no.	Euro
Towel rack with towel holder · wall-mounted · material: brass · material holder: metal · length: 600 mm · with mounting material · concealed fastening · drilling distance: 600 mm · diameter drill hole: 6 mm	Chrome	41720000	77.70
Double bath towel rail · wall-mounted · material: brass · material holder: metal · length: 644 mm · with mounting material · concealed fastening · drilling distance: 600 mm · diameter drill hole: 6 mm	Chrome	41712000	55.50
Towel ring · wall-mounted · material: brass · material holder: metal · with mounting material · concealed fastening · drilling distance: 26 mm · diameter drill hole: 6 mm	Chrome	41724000	27.70
Towel hook · wall-mounted · material: brass · material holder: metal · with mounting material · concealed fastening · diameter drill hole: 6 mm	Chrome	41711000	8.40
Towel hook double · wall-mounted · material: brass · material holder: metal · with mounting material · concealed fastening · drilling distance: 26 mm · diameter drill hole: 6 mm	Chrome	41725000	16.70
Toilet paper holder with cover · wall-mounted · material: brass · material holder: metal · with mounting material · concealed fastening · drilling distance: 26 mm · diameter drill hole: 6 mm	Chrome	41723000	38.80

Measurements within scale drawings are in mm.

Technical specifications and units of measure are subject to change.

	finish	code no.	Euro
Toilet paper holder · wall-mounted · material: brass · material holder: metal · with mounting material · concealed fastening · drilling distance: 26 mm · diameter drill hole: 6 mm	Chrome	41726000	27.70
Toilet paper holder double · wall-mounted · material: brass · with mounting material · concealed fastening · drilling distance: 26 mm · diameter drill hole: 6 mm · for 2 paper rolls	Chrome	41717000	27.70
Toilet brush holder wall-mounted · wall-mounted · material: brass · material recess: matt glass · with removable insert · with mounting material · concealed fastening · drilling distance 26 mm · diameter drill hole: 6 mm	Chrome	41722000	38.80
Optional parts: · Replacement toilet brush with handle	Chrome	93286000	28.20
Shaving mirror · wall-mounted · material: mirror glass · material frame: metal · mirror is inclinable · swivelling · enlargement: 1 x magnification, 3 x magnification · with mounting material · concealed fastening · drilling distance: 50 mm · diameter drill hole: 6 mm	Chrome	73561000	66.50

Measurements within scale drawings are in mm.

	finish	code no.	Euro



Bath-accessory set 5 in 1

Chrome 41728000 199.70

· consists of: towel rack with towel holder, roll holder, toilet brush, towel hook double

Consisting of:
· Towel rack with towel holder (# 41720000)
· Bath towel rail (# 41716000)
· Towel hook double (# 41725000)
· Toilet brush holder wall-mounted (# 41722000)
· Toilet paper holder with cover (# 41723000)



Bath-accessory set 3 in 1

Chrome 41727000 122.10

· consists of: double bath towel rail, roll holder, toilet brush

Consisting of:
· Double bath towel rail (# 41712000)
· Toilet paper holder with cover (# 41723000)
· Toilet brush holder wall-mounted (# 41722000)

WallStoris

NEW

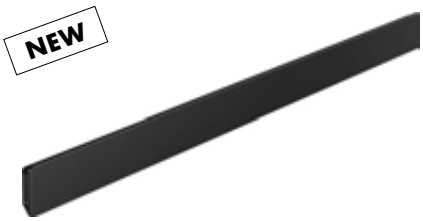

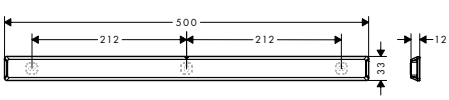

Wall bar 50 cm

Matt Black 27902670 24.90
Matt White 27902700 24.90

Glue or Screw Fix

· consists of: carrier bar, decorative bar
· wall-mounted
· suitable for horizontal and vertical installation
· ideal for tiles, glass, metal
· application - glue or drill
· including gluing set
· holding force: 6 kg
· material carrier bar: metal
· material decorative bar: plastic
· length: 500 mm
· concealed fastening
· drilling distance: 212 mm

available from April 2022

Alternative sizes:

NEW · Wall bar 70 cm — Matt Black 27904670 29.90; Matt White 27904700 29.90

Optional parts:

NEW · Mounting set (3 screws, 3 plugs) — 94268000 6.60

Measurements within scale drawings are in mm.

Technical specifications and units of measure are subject to change.

	finish	code no.	Euro
Wall bar 70 cm	Matt Black	27904670	29.90
	Matt White	27904700	29.90



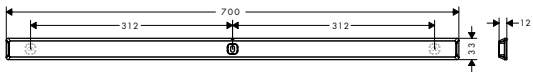

- consists of: carrier bar, decorative bar
- wall-mounted
- suitable for horizontal and vertical installation
- ideal for tiles, glass, metal
- application - glue or drill
- including gluing set
- holding force: 6 kg
- material carrier bar: metal
- material decorative bar: plastic
- length: 700 mm
- concealed fastening
- drilling distance: 312 mm

Glue or Screw Fix

available from April 2022

Alternative sizes:

NEW · Wall bar 50 cm	Matt Black	27902670	24.90
	Matt White	27902700	24.90

Optional parts:

NEW · Mounting set (3 screws, 3 plugs)		94268000	6.60

	finish	code no.	Euro
Storage basket deep	Matt Black	27912670	18.90
	Matt White	27912700	18.90



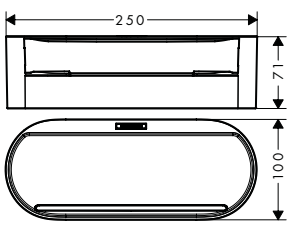

- material: plastic dyed through
- recess for draining water
- dimensions: 250 x 71 mm
- accessory can be clicked onto the wall bar
- storage for squeegee
- ideal to store shampoo, shower gel, razors
- dishwasher safe, easy to clean

EasyClick

available from April 2022

Required parts (choose one)

NEW · Wall bar 50 cm	Matt Black	27902670	24.90
	Matt White	27902700	24.90
NEW · Wall bar 70 cm	Matt Black	27904670	29.90
	Matt White	27904700	29.90

Alternative sizes:

NEW · Storage basket	Matt Black	27913670	13.90
	Matt White	27913700	13.90

Optional parts:

NEW · Squeegee	Matt Black	27916670	10.90
	Matt White	27916700	10.90
NEW · Cover for storage basket	Matt Black	27925670	9.40
	Matt White	27925700	9.40

Measurements within scale drawings are in mm.

Technical specifications and units of measure are subject to change.

		finish	code no.	Euro
NEW	**Storage basket**	Matt Black	27913670	13.90
	· material: plastic dyed through · recess for draining water · dimensions: 250 x 39 mm · accessory can be clicked onto the wall bar · storage for squeegee · ideal to store shampoo, shower gel, razors · dishwasher safe, easy to clean	Matt White	27913700	13.90
				EasyClick
				available from April 2022
	Required parts (choose one)			
NEW	· Wall bar 50 cm	Matt Black	27902670	24.90
		Matt White	27902700	24.90
NEW	· Wall bar 70 cm	Matt Black	27904670	29.90
		Matt White	27904700	29.90
	Alternative sizes:			
NEW	· Storage basket deep	Matt Black	27912670	18.90
		Matt White	27912700	18.90
	Optional parts:			
NEW	· Squeegee	Matt Black	27916670	10.90
		Matt White	27916700	10.90
NEW	· Cover for storage basket	Matt Black	27925670	9.40
		Matt White	27925700	9.40



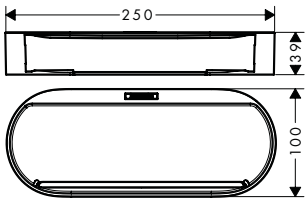

NEW	**Cover for storage basket**	Matt Black	27925670	9.40
	· material: plastic dyed through · closes storage basket · offers storage space · dishwasher safe, easy to clean · length: 250 mm	Matt White	27925700	9.40
				available from April 2022
	Required parts:			
NEW	· Storage basket deep	Matt Black	27912670	18.90
		Matt White	27912700	18.90
NEW	· Storage basket	Matt Black	27913670	13.90
		Matt White	27913700	13.90



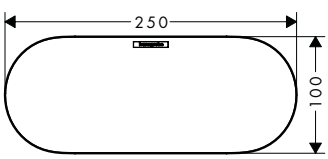

NEW	**Squeegee**	Matt Black	27916670	10.90
	· material: plastic · storage option in storage basket · special feature: suitable for glass · easy to clean · ergonomic design · dimensions: 195 x 44 mm	Matt White	27916700	10.90
				available from April 2022
	Optional parts:			
NEW	· Storage basket deep	Matt Black	27912670	18.90
		Matt White	27912700	18.90
NEW	· Storage basket	Matt Black	27913670	13.90
		Matt White	27913700	13.90



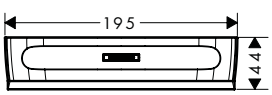

Measurements within scale drawings are in mm.

Technical specifications and units of measure are subject to change.

	finish	code no.	Euro
Towel hook wide			
· material: plastic dyed through · accessory can be clicked onto the wall bar · ideal to hang towels, face cloth, sponges, clothes · dishwasher safe, easy to clean · packaging unit: 2 pieces	Matt Black Matt White	27914670 27914700	5.90 5.90
			available from April 2022
Required parts (choose one)			
NEW · Wall bar 50 cm	Matt Black Matt White	27902670 27902700	24.90 24.90
NEW · Wall bar 70 cm	Matt Black Matt White	27904670 27904700	29.90 29.90
Alternative sizes:			
NEW · Towel hook slim	Matt Black Matt White	27929670 27929700	4.90 4.90
Towel hook slim			
· material: plastic dyed through · accessory can be clicked onto the wall bar · ideal to hang towels, face cloth, sponges, clothes · dishwasher safe, easy to clean · packaging unit: 2 pieces	Matt Black Matt White	27929670 27929700	4.90 4.90
			available from April 2022
Required parts (choose one)			
NEW · Wall bar 50 cm	Matt Black Matt White	27902670 27902700	24.90 24.90
NEW · Wall bar 70 cm	Matt Black Matt White	27904670 27904700	29.90 29.90
Alternative sizes:			
NEW · Towel hook wide	Matt Black Matt White	27914670 27914700	5.90 5.90
Shelf			
· material shelf: plastic dyed through · dimensions: 200 x 169 mm · accessory can be clicked onto the wall bar · ideal to store razors, mug, candles · dishwasher safe, easy to clean	Matt Black Matt White	27915670 27915700	24.90 24.90
			available from April 2022
Required parts (choose one)			
NEW · Wall bar 50 cm	Matt Black Matt White	27902670 27902700	24.90 24.90
NEW · Wall bar 70 cm	Matt Black Matt White	27904670 27904700	29.90 29.90
Tumbler			
· consists of: tumbler, partition wall · material: plastic dyed through · recess for draining water · accessory can be clicked onto the wall bar · ideal to store shampoo, razors, tooth paste · with a partition that can be repositioned or removed · dishwasher safe, easy to clean	Matt Black Matt White	27921670 27921700	18.90 18.90
			available from April 2022
Required parts:			
NEW · Wall bar 50 cm	Matt Black Matt White	27902670 27902700	24.90 24.90
NEW · Wall bar 70 cm	Matt Black Matt White	27904670 27904700	29.90 29.90

Measurements within scale drawings are in mm.

Technical specifications and units of measure are subject to change.

	finish	code no.	Euro

Push slider

NEW



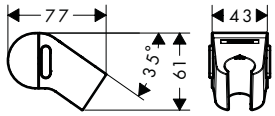

- material: plastic
- for shower hoses with conical nut on both sides
- height-adjustable slider with locking push-button slider
- slider is rotatable – can be used on vertical and horizontal wall bars

	Matt Black	27917670	19.90
	Matt White	27917700	19.90

Push slider

available from April 2022

Required parts:

NEW · Wall bar 50 cm	Matt Black	27902670	24.90
	Matt White	27902700	24.90
NEW · Wall bar 70 cm	Matt Black	27904670	29.90
	Matt White	27904700	29.90

Towel rail

NEW



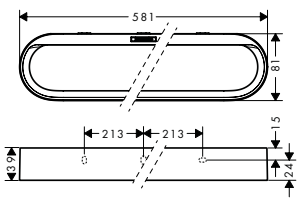

- consists of: decorative bar, carrier bar
- wall-mounted
- ideal for tiles, glass, metal
- application - glue or drill
- including gluing set
- holding force: 6 kg
- material carrier bar: metal
- material decorative bar: plastic dyed through
- length: 581 mm
- concealed fastening

	Matt Black	27926670	29.90
	Matt White	27926700	29.90

Glue or Screw Fix

available from April 2022

Optional parts:

NEW · Mounting set (3 screws, 3 plugs)		94268000	6.60

Toilet paper holder with shelf

NEW



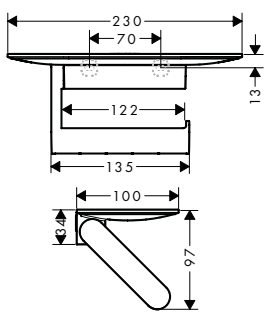

- wall-mounted
- material: plastic dyed through
- concealed fastening
- open form - toilet paper can easily be hung
- suitable for roll widths up to 122 mm
- with storage space
- application - glue or drill
- including gluing set
- length 230 mm

	Matt Black	27928670	29.90
	Matt White	27928700	29.90

Glue or Screw Fix

available from April 2022

Consisting of:

NEW · Mounting set (3 screws, 3 plugs) (#)

Toilet brush holder

NEW



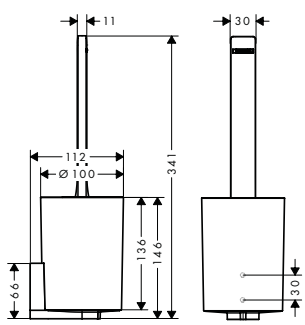

- material: plastic dyed through
- material recess: matt plastic
- with removable insert
- concealed fastening
- removable container and easy to clean
- container is dishwasher safe
- including toilet brush
- application - glue or drill
- including gluing set
- ergonomic handle

	Matt Black	27927670	38.90
	Matt White	27927700	38.90

Glue or Screw Fix

available from April 2022

Optional parts:

NEW · Replacement toilet brush without stick	Black	40068000	17.60
· Mounting set (3 screws, 3 plugs)		94268000	6.60

Measurements within scale drawings are in mm.

Technical specifications and units of measure are subject to change.

	finish	code no.	Euro
Bathtub bundle	Matt Black	27966670	70.00
	Matt White	27966700	70.00

NEW



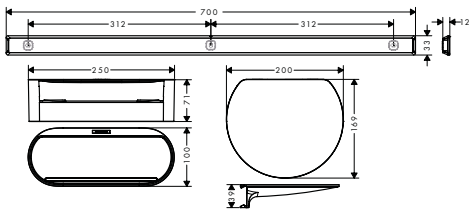

- consists of: wall bar, shelf, storage basket
- material: plastic dyed through
- wall-mounted
- suitable for horizontal and vertical installation
- ideal for tiles, glass, metal
- application - glue or drill
- including gluing set
- accessory can be clicked onto the wall bar
- storage for squeegee
- ideal to store shampoo, shower gel, razors
- ideal to store razors, mug, candles
- dishwasher safe, easy to clean
- concealed fastening

Consisting of:

NEW · Wall bar 70 cm (# 27904XXX)
NEW · Storage basket deep (# 27912XXX)
NEW · Shelf (# 27915XXX)

EasyClick | Glue or Screw Fix

available from April 2022

	finish	code no.	Euro
Shower bundle	Matt Black	27967670	52.80
	Matt White	27967700	52.80

NEW



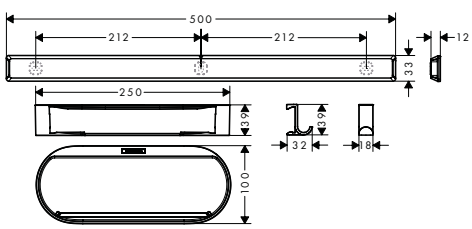

- consists of: wall bar, storage basket, squeegee, towel hook
- material: plastic dyed through
- wall-mounted
- suitable for horizontal and vertical installation
- ideal for tiles, glass, metal
- application - glue or drill
- including gluing set
- accessory can be clicked onto the wall bar
- storage for squeegee
- ideal to hang towels, face cloth, sponges, clothes
- ideal to store shampoo, shower gel, razors
- easy to clean
- concealed fastening
- with drain hole: recess for draining water

Consisting of:

NEW · Wall bar 50 cm (# 27902XXX)
NEW · Storage basket (# 27913XXX)
NEW · Squeegee (# 27916XXX)
NEW · Towel hook wide (# 27914XXX)

EasyClick | Glue or Screw Fix

available from April 2022

Measurements within scale drawings are in mm.

Technical specifications and units of measure are subject to change.

	finish	code no.	Euro
Bathroom bundle	Matt Black	27968670	63.80
	Matt White	27968700	63.80

EasyClick | Glue or Screw Fix

available from April 2022



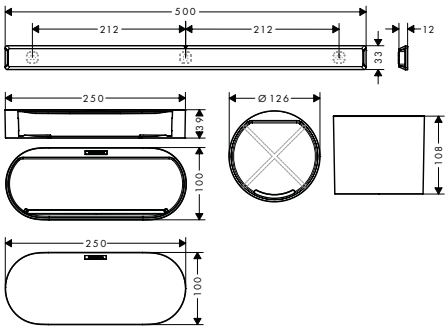

- consists of: wall bar, storage basket, cover, tumbler
- material: plastic dyed through
- wall-mounted
- suitable for horizontal and vertical installation
- ideal for tiles, glass, metal
- application - glue or drill
- including gluing set
- accessory can be clicked onto the wall bar
- storage for squeegee
- ideal to store shampoo, razors, tooth paste
- with a partition that can be repositioned or removed
- closes storage basket
- offers storage space
- dishwasher safe, easy to clean
- concealed fastening
- with drain hole: recess for draining water

Consisting of:

NEW · Wall bar 50 cm (# 27902XXX)
NEW · Storage basket (# 27913XXX)
NEW · Cover for storage basket (# 27925XXX)
NEW · Tumbler (# 27921XXX)

	finish	code no.	Euro
Toilet bundle	Matt Black	27969670	65.40
	Matt White	27969700	65.40

Glue or Screw Fix

available from April 2022



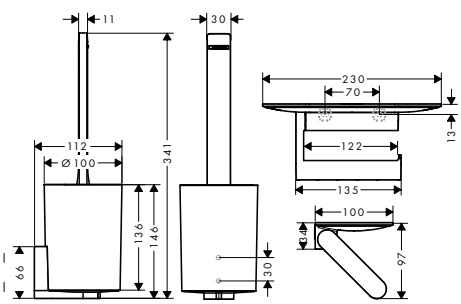

- consists of: toilet paper holder, toilet brush holder
- material: plastic dyed through
- material recess: matt plastic
- with removable insert
- removable container and easy to clean
- container is dishwasher safe
- including toilet brush
- open form - toilet paper can easily be hung
- suitable for roll widths up to 122 mm
- with storage space
- application - glue or drill
- including gluing set
- concealed fastening

Consisting of:

NEW · Toilet paper holder with shelf (# 27928XXX)
NEW · Toilet brush holder (# 27927XXX)

Optional parts:

NEW · Replacement toilet brush without stick	Black	40068000	17.60
NEW · Mounting set (3 screws, 3 plugs)		94268000	6.60

Measurements within scale drawings are in mm.

Technical specifications and units of measure are subject to change.

	finish	code no.	Euro
Bundle hand shower 105 3jet Activation EcoSmart, shower bar 70 cm and storage set	Matt Black	24291670	98.00
	Matt White	24291700	98.00

EasyClick · Push slider · EcoSmart

available from April 2022

NEW



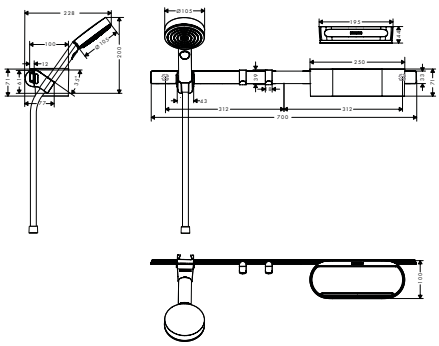

- consists of: hand shower, shower hose, wall bar, storage basket, towel hook, hand shower holder, squeegee
- shower head size hand shower: 105 mm
- spray type hand shower: PowderRain, IntenseRain, MonoRain
- convenient diversion via Select button
- maximum flow rate at 3 bar: 8,5 l/min
- installation: wall

Consisting of:

NEW · Hand shower 105 3jet Activation EcoSmart (# 24101XXX)
NEW · Shower hose 160 cm (# 28276XXX)
NEW · Wall bar 70 cm (# 27904XXX)
NEW · Storage basket deep (# 27912XXX)
NEW · Towel hook wide (# 27914XXX)
NEW · Push slider (# 27917XXX)
NEW · Squeegee (# 27916XXX)

	finish	code no.	Euro
Bundle hand shower 105 3jet EcoSmart Activation, thermostat, shower bar 70 cm and storage set	Matt Black	24250670	418.00
	Matt White	24250700	418.00

EasyClick · Push slider · EcoSmart

available from April 2022

NEW



- consists of: hand shower, shower thermostat, shower hose, wall bar, storage basket, towel hook, hand shower holder
- shower head size hand shower: 105 mm
- spray type hand shower: PowderRain, IntenseRain, MonoRain
- convenient diversion via Select button
- maximum flow rate at 3 bar: 8,5 l/min
- installation: wall
- shelf made of plastic
- Thermostat is delivered with button hand shower
- temperature and volume control
- the volume control regulates up to 30% of the water flow
- safety lock at 40 °C

Consisting of:

NEW · Hand shower 105 3jet Activation EcoSmart (# 24101XXX)
NEW · Shower thermostat 400 for exposed installation (# 24360XXX)
NEW · Shower hose 160 cm (# 28276XXX)
NEW · Wall bar 70 cm (# 27904XXX)
NEW · Storage basket deep (# 27912XXX)
NEW · Towel hook wide (# 27914XXX)
NEW · Push slider (# 27917XXX)

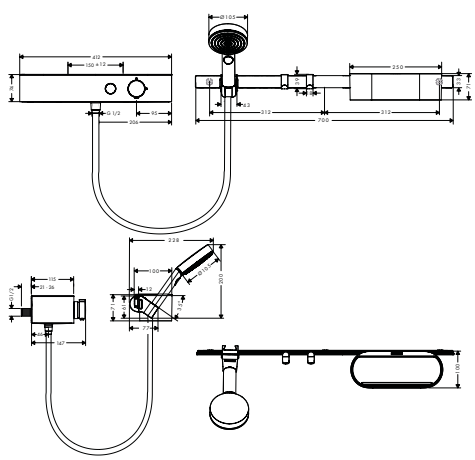

Measurements within scale drawings are in mm.

Technical specifications and units of measure are subject to change.

RainScent



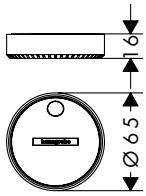

	finish	code no.	Euro
Starter kit (1 case + 2 shower tabs) · consists of: Case, 2 shower tabs rosemary/citrus + lavender · purpose of use: suitable for shower · material: plastic · by light pressure on the trough the lid tilts to insert the shower tab · suitable for round shower tabs with a diameter of 35 mm and a thickness of 12 mm · opening and flow slots for entry and exit of water at the bottom · matching scents to the RainTunes scenarios good morning/ recreation and good night/ relaxation · optimum fragrance development · full protection for shower tabs · case is dishwasher safe · design matches hansgrohe RainButtons	Matt White	21140700	15.70
Optional parts:			
· Wellness kit rosemary/citrus (package of 5 shower tabs)		21141000	10.70
· Wellness kit lavender (package of 5 shower tabs)		21142000	10.70
· Wellness kit pomegranate (package of 5 shower tabs)		21143000	10.70
· Wellness kit bergamot (package of 5 shower tabs)		21144000	10.70
· Wellness kit silver fir (package of 5 shower tabs)		21145000	10.70
· Wellness kit mix (package of 5 shower tabs)		21146000	10.70



Wellness kit rosemary/citrus (package of 5 shower tabs) · purpose of use: suitable for shower · matching scent to the RainTunes scenarios good morning and recreation · with natural essential oils · complete dissolution within a shower session · vegan and without microplastics · scent protective packaging · 30 months shelf life · size: diameter: 35 mm, height: 12 mm		21141000	10.70
Optional parts:			
· Starter kit (1 case + 2 shower tabs)	Matt White	21140700	15.70



Wellness kit lavender (package of 5 shower tabs) · purpose of use: suitable for shower · matching scent to the RainTunes scenarios good night and relaxation · with natural essential oils · complete dissolution within a shower session · vegan and without microplastics · scent protective packaging · 30 months shelf life · size: diameter: 35 mm, height: 12 mm		21142000	10.70
Optional parts:			
· Starter kit (1 case + 2 shower tabs)	Matt White	21140700	15.70

Measurements within scale drawings are in mm.

Technical specifications and units of measure are subject to change.

	finish	code no.	Euro
			
Wellness kit pomegranate (package of 5 shower tabs) · purpose of use: suitable for shower · matching scent to the RainTunes scenario beauty · with natural essential oils · complete dissolution within a shower session · vegan and without microplastics · scent protective packaging · 30 months shelf life · size: diameter: 35 mm, height: 12 mm		21143000	10.70
Optional parts: · Starter kit (1 case + 2 shower tabs)	Matt White	21140700	15.70
			
Wellness kit bergamot (package of 5 shower tabs) · purpose of use: suitable for shower · matching scent to the RainTunes scenario vitality · with natural essential oils · complete dissolution within a shower session · vegan and without microplastics · scent protective packaging · 30 months shelf life · size: diameter: 35 mm, height: 12 mm		21144000	10.70
Optional parts: · Starter kit (1 case + 2 shower tabs)	Matt White	21140700	15.70
			
Wellness kit silver fir (package of 5 shower tabs) · purpose of use: suitable for shower · matching scent to the RainTunes scenario nature · with natural essential oils · complete dissolution within a shower session · vegan and without microplastics · scent protective packaging · 30 months shelf life · size: diameter: 35 mm, height: 12 mm		21145000	10.70
Optional parts: · Starter kit (1 case + 2 shower tabs)	Matt White	21140700	15.70
			
Wellness kit mix (package of 5 shower tabs) · consists of: each 1 tab of varieties rosemayr/citrus, lavender, pomegranate, bergamot, silver fir · purpose of use: suitable for shower · matching scents to the RainTunes scenarios · with natural essential oils · complete dissolution within a shower session · vegan and without microplastics · scent protective packaging · 30 months shelf life · size: diameter: 35 mm, height: 12 mm		21146000	10.70
Optional parts: · Starter kit (1 case + 2 shower tabs)	Matt White	21140700	15.70

Measurements within scale drawings are in mm.

Technical specifications and units of measure are subject to change.

Wastes and overflow



uBox universal	page 566		RainDrain Flex	page 571	
RainDrain Match	page 579		RainDrain Rock	page 585	
Waste for shower trays	page 589		Bath filler with waste and overflow for bath tubs	page 590	
Waste and overflow for bath tubs	page 595		Waste for basin/ bidet	page 597	
Traps	page 598		Accessories	page 601	

uBox universal

		finish	code no.	Euro
NEW	**uBox universal** Base set for finish sets for standard installation		01001180	160.00



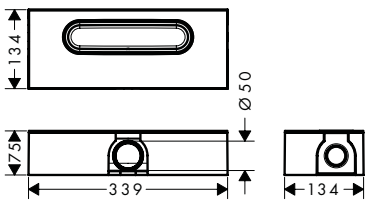

- consists of: base set, siphon, pre-assembled sealing membrane, height adjustment boards, screed protection cover
- suitable for all shower drains
- where to use: new construction, renovation
- water seal: 50 mm
- minimal installation height: 75 mm
- drainage capacity with siphon: up to 42 l/min
- drainage capacity with Dryphon: up to 60 l/min
- connection diameter: DN50
- direction of outlet: horizontal
- connection: 3-sided
- easy fixation to the floor with mounting bracket
- height adjustable with the foam boards
- mounting type: wall-mounted, free in the floor
- easy to clean siphon
- removable siphon
- suitable for soundproof mounting

Alternative products:

NEW	· **uBox universal** Base set for finish sets for flat installation	01000180	160.00
NEW	· **uBox universal** Base set for finish sets for vertical installation	01002180	160.00

NEW	**uBox universal** Base set for finish sets for flat installation	01000180	160.00



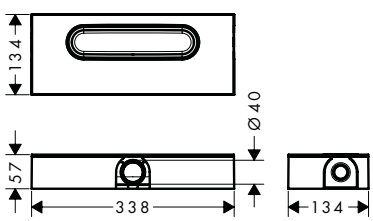

- consists of: base set, siphon, pre-assembled sealing membrane, height adjustment boards, screed protection cover
- suitable for all shower drains
- where to use: new construction, renovation
- water seal: 30 mm
- minimal installation height: 57 mm
- drainage capacity with siphon: up to 33 l/min
- drainage capacity with Dryphon: up to 55 l/min
- connection diameter: DN40
- direction of outlet: horizontal
- connection: 3-sided
- easy fixation to the floor with mounting bracket
- height adjustable with the foam boards
- mounting type: wall-mounted, free in the floor
- easy to clean siphon
- removable siphon
- suitable for soundproof mounting

Alternative products:

NEW	· **uBox universal** Base set for finish sets for standard installation	01001180	160.00
NEW	· **uBox universal** Base set for finish sets for vertical installation	01002180	160.00

Measurements within scale drawings are in mm.

Technical specifications and units of measure are subject to change.

		finish	code no.	Euro
NEW	**uBox universal** Base set for finish sets for vertical installation		01002180	160.00



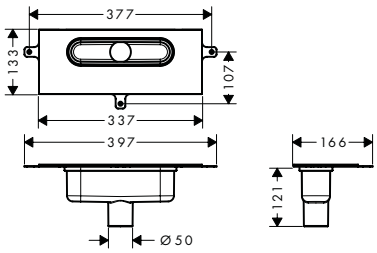

- consists of: base set, siphon, pre-assembled sealing membrane, screed protection cover
- suitable for all shower drains
- where to use: new construction, renovation
- water seal: 50 mm
- minimal installation height: 75 mm
- drainage capacity with siphon: up to 42 l/ min
- drainage capacity with Dryphon: up to 60 l/ min
- connection diameter: DN50
- direction of outlet: vertical
- connection: 1-sided
- mounting type: wall-mounted, free in the floor
- easy to clean siphon
- removable siphon

Alternative products:

NEW	**uBox universal** Base set for finish sets for standard installation		01001180	160.00
NEW	**uBox universal** Base set for finish sets for flat installation		01000180	160.00

Measurements within scale drawings are in mm.

Technical specifications and units of measure are subject to change.

		finish	code no.	Euro
NEW	**uBox universal** Complete set for standard installation - 600 for shower drains finish sets		56022180	373.00



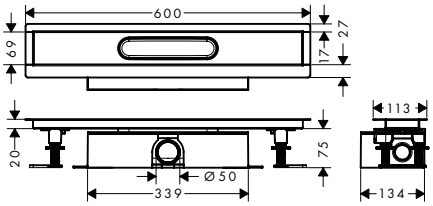

- consists of: installation set, base set, pre-assembled sealing membrane, siphon, height adjustment boards
- suitable for all RainDrain Rock and RainDrain Match finish sets
- where to use: new construction, renovation
- water seal: 50 mm
- drainage capacity with siphon: up to 42 l/ min
- drainage capacity with Dryphon: up to 60 l/ min
- connection diameter: DN50
- direction of outlet: horizontal
- connection: 3-sided
- incl. height adjustment feet and tiling tool for installation
- easy fixation to the floor with mounting bracket
- height adjustable with the foam boards
- with integrated slope
- mounting type: wall-mounted, free in the floor
- easy to clean siphon
- removable siphon
- material installation set: Stainless Steel 304 (1.4301)

Consisting of:

NEW · **uBox universal** Base set for finish sets for standard installation (# 01001180)

NEW · **RainDrain** Installation set 600 for shower drains finish sets (# 56010180)

Alternative sizes:

NEW	· **uBox universal** Complete set for standard installation - 700 for shower drains finish sets	56023180	375.00
NEW	· **uBox universal** Complete set for standard installation - 800 for shower drains finish sets	56024180	379.00
NEW	· **uBox universal** Complete set for standard installation - 900 for shower drains finish sets	56025180	385.00
NEW	· **uBox universal** Complete set for standard installation - 1000 for shower drains finish sets	56026180	393.00
NEW	· **uBox universal** Complete set for standard installation - 1200 for shower drains finish sets	56027180	407.00

Alternative products:

NEW	· **uBox universal** Complete set for flat installation - 600 for shower drains finish sets	56016180	373.00

Measurements within scale drawings are in mm.

Technical specifications and units of measure are subject to change.

		finish	code no.	Euro
NEW	**uBox universal** Complete set for flat installation - 600 for shower drains finish sets		56016180	373.00



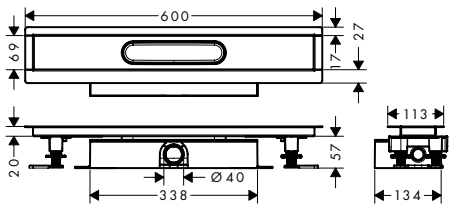

- consists of: installation set, base set, pre-assembled sealing membrane, siphon, height adjustment boards
- suitable for all RainDrain Rock and RainDrain Match finish sets
- where to use: new construction, renovation
- water seal: 30 mm
- drainage capacity with siphon: up to 33 l/min
- drainage capacity with Dryphon: up to 55 l/min
- connection diameter: DN40
- direction of outlet: horizontal
- connection: 3-sided
- incl. height adjustment feet and tiling tool for installation
- easy fixation to the floor with mounting bracket
- height adjustable with the foam boards
- with integrated slope
- mounting type: wall-mounted, free in the floor
- easy to clean siphon
- removable siphon
- material installation set: Stainless Steel 304 (1.4301)

Consisting of:

NEW · **uBox universal** Base set for finish sets for flat installation (# 01000180)

NEW · **RainDrain** Installation set 600 for shower drains finish sets (# 56010180)

Alternative sizes:

NEW	· **uBox universal** Complete set for flat installation - 700 for shower drains finish sets	56017180	375.00
NEW	· **uBox universal** Complete set for flat installation - 800 for shower drains finish sets	56018180	379.00
NEW	· **uBox universal** Complete set for flat installation - 900 for shower drains finish sets	56019180	385.00
NEW	· **uBox universal** Complete set for flat installation - 1000 for shower drains finish sets	56020180	393.00
NEW	· **uBox universal** Complete set for flat installation - 1200 for shower drains finish sets	56021180	407.00

Alternative products:

NEW	· **uBox universal** Complete set for standard installation - 600 for shower drains finish sets	56022180	373.00

Measurements within scale drawings are in mm.

Technical specifications and units of measure are subject to change.

RainDrain

		finish	code no.	Euro
NEW	 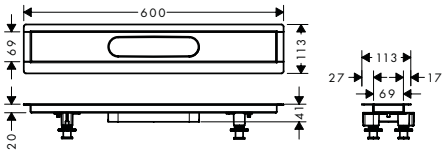			
	RainDrain Installation set 600 for shower drains finish sets · consists of: Stainless Steel drain, pre-assembled sealing membrane, height adjustment feet, tiling tool · suitable for all RainDrain Rock and RainDrain Match finish sets · where to use: new construction, renovation · incl. height adjustment feet and tiling tool for installation · with integrated slope · material installation set: Stainless Steel 304 (1.4301)		56010180	213.00
	Required parts (choose one)			
NEW	· **uBox universal** Base set for finish sets for flat installation		01000180	160.00
NEW	· **uBox universal** Base set for finish sets for standard installation		01001180	160.00
NEW	· **uBox universal** Base set for finish sets for vertical installation		01002180	160.00
	Alternative sizes:			
NEW	· **RainDrain** Installation set 700 for shower drains finish sets		56011180	215.00
NEW	· **RainDrain** Installation set 800 for shower drains finish sets		56012180	219.00
NEW	· **RainDrain** Installation set 900 for shower drains finish sets		56013180	225.00
NEW	· **RainDrain** Installation set 1000 for shower drains finish sets		56014180	233.00
NEW	· **RainDrain** Installation set 1200 for shower drains finish sets		56015180	247.00

Measurements within scale drawings are in mm.

Technical specifications and units of measure are subject to change.

RainDrain Flex

NEW



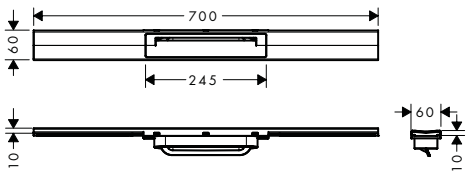

RainDrain Flex Finish set shower drain 700 cuttable

- consists of: design grate with removable cover, Dryphon
- can be shortened on site
- easy to clean surface
- height adjustable by 10 mm
- up to 60 l/min drainage capacity
- where to use: new construction, renovation
- grate removal tool allows easy removal of the finish set
- with integrated slope
- type of odour seal: mechanical
- mounting type: two-sided
- grate material: Stainless Steel 304 (1.4301)
- suitable for primary drainage
- grate width: 60 mm

	finish	code no.	Euro
	Chrome	56043000	389.00
	Brushed Bronze	56043140	478.00
	Brushed Black Chrome	56043340	478.00
	Matt Black	56043670	389.00
	Matt White	56043700	389.00
	Brushed Stainless Steel	56043800	278.00
	Polished Gold Optic	56043990	478.00

Resizable Cover Length · Quick Clean · Two-sided Installation

Required parts (choose one)

NEW	· **uBox universal** Base set for finish sets for standard installation	01001180	160.00
NEW	· **uBox universal** Base set for finish sets for flat installation	01000180	160.00
NEW	· **uBox universal** Base set for finish sets for vertical installation	01002180	160.00

Alternative products:

NEW	· **RainDrain Flex** Finish set shower drain 700 cuttable for wall mounting	Chrome	56050000	389.00
		Brushed Bronze	56050140	478.00
		Brushed Black Chrome	56050340	478.00
		Matt Black	56050670	389.00
		Matt White	56050700	389.00
		Brushed Stainless Steel	56050800	278.00
		Polished Gold Optic	56050990	478.00

NEW



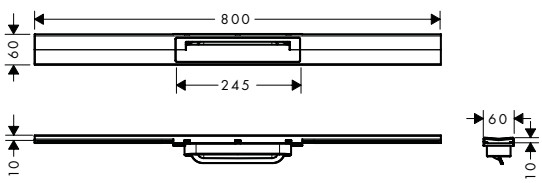

RainDrain Flex Finish set shower drain 800 cuttable

- consists of: design grate with removable cover, Dryphon
- can be shortened on site
- easy to clean surface
- height adjustable by 10 mm
- up to 60 l/min drainage capacity
- where to use: new construction, renovation
- grate removal tool allows easy removal of the finish set
- with integrated slope
- type of odour seal: mechanical
- mounting type: two-sided
- grate material: Stainless Steel 304 (1.4301)
- suitable for primary drainage
- grate width: 60 mm

	finish	code no.	Euro
	Chrome	56044000	399.00
	Brushed Bronze	56044140	490.00
	Brushed Black Chrome	56044340	490.00
	Matt Black	56044670	399.00
	Matt White	56044700	399.00
	Brushed Stainless Steel	56044800	285.00
	Polished Gold Optic	56044990	490.00

Resizable Cover Length · Quick Clean · Two-sided Installation

Required parts (choose one)

NEW	· **uBox universal** Base set for finish sets for standard installation	01001180	160.00
NEW	· **uBox universal** Base set for finish sets for flat installation	01000180	160.00
NEW	· **uBox universal** Base set for finish sets for vertical installation	01002180	160.00

Alternative products:

NEW	· **RainDrain Flex** Finish set shower drain 800 cuttable for wall mounting	Chrome	56051000	399.00
		Brushed Bronze	56051140	490.00
		Brushed Black Chrome	56051340	490.00
		Matt Black	56051670	399.00
		Matt White	56051700	399.00
		Brushed Stainless Steel	56051800	285.00
		Polished Gold Optic	56051990	490.00

Measurements within scale drawings are in mm.

Technical specifications and units of measure are subject to change.

		finish	code no.	Euro
NEW	**RainDrain Flex** Finish set shower drain 900 cuttable	Chrome	56045000	434.00
		Brushed Bronze	56045140	533.00
		Brushed Black Chrome	56045340	533.00
		Matt Black	56045670	434.00
		Matt White	56045700	434.00
		Brushed Stainless Steel	56045800	310.00
		Polished Gold Optic	56045990	533.00



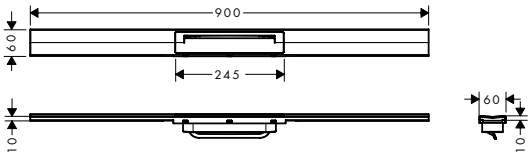

- consists of: design grate with removable cover, Dryphon
- can be shortened on site
- easy to clean surface
- height adjustable by 10 mm
- up to 60 l/min drainage capacity
- where to use: new construction, renovation
- grate removal tool allows easy removal of the finish set
- with integrated slope
- type of odour seal: mechanical
- mounting type: two-sided
- grate material: Stainless Steel 304 (1.4301)
- suitable for primary drainage
- grate width: 60 mm

Resizable Cover Length · Quick Clean · Two-sided Installation

Required parts (choose one)

NEW	· **uBox universal** Base set for finish sets for standard installation		01001180	160.00
NEW	· **uBox universal** Base set for finish sets for flat installation		01000180	160.00
NEW	· **uBox universal** Base set for finish sets for vertical installation		01002180	160.00

Alternative products:

NEW	· **RainDrain Flex** Finish set shower drain 900 cuttable for wall mounting	Chrome	56052000	434.00
		Brushed Bronze	56052140	533.00
		Brushed Black Chrome	56052340	533.00
		Matt Black	56052670	434.00
		Matt White	56052700	434.00
		Brushed Stainless Steel	56052800	310.00
		Polished Gold Optic	56052990	533.00

NEW	**RainDrain Flex** Finish set shower drain 1000 cuttable	Chrome	56046000	445.00
		Brushed Bronze	56046140	547.00
		Brushed Black Chrome	56046340	547.00
		Matt Black	56046670	445.00
		Matt White	56046700	445.00
		Brushed Stainless Steel	56046800	318.00
		Polished Gold Optic	56046990	547.00



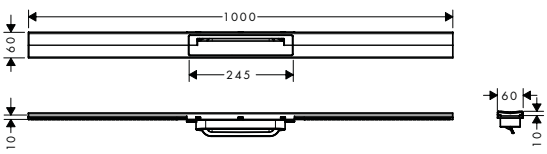

- consists of: design grate with removable cover, Dryphon
- can be shortened on site
- easy to clean surface
- height adjustable by 10 mm
- up to 60 l/min drainage capacity
- where to use: new construction, renovation
- grate removal tool allows easy removal of the finish set
- with integrated slope
- type of odour seal: mechanical
- mounting type: two-sided
- grate material: Stainless Steel 304 (1.4301)
- suitable for primary drainage
- grate width: 60 mm

Resizable Cover Length · Quick Clean · Two-sided Installation

Required parts (choose one)

NEW	· **uBox universal** Base set for finish sets for standard installation		01001180	160.00
NEW	· **uBox universal** Base set for finish sets for flat installation		01000180	160.00
NEW	· **uBox universal** Base set for finish sets for vertical installation		01002180	160.00

Alternative products:

NEW	· **RainDrain Flex** Finish set shower drain 1000 cuttable for wall mounting	Chrome	56053000	445.00
		Brushed Bronze	56053140	547.00
		Brushed Black Chrome	56053340	547.00
		Matt Black	56053670	445.00
		Matt White	56053700	445.00
		Brushed Stainless Steel	56053800	318.00
		Polished Gold Optic	56053990	547.00

Measurements within scale drawings are in mm.

Technical specifications and units of measure are subject to change.

NEW



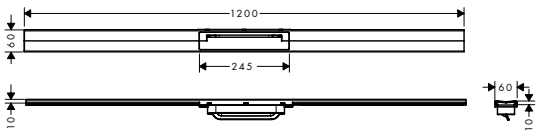

RainDrain Flex Finish set shower drain 1200 cuttable

- consists of: design grate with removable cover, Dryphon
- can be shortened on site
- easy to clean surface
- height adjustable by 10 mm
- up to 60 l/ min drainage capacity
- where to use: new construction, renovation
- grate removal tool allows easy removal of the finish set
- with integrated slope
- type of odour seal: mechanical
- mounting type: two-sided
- grate material: Stainless Steel 304 (1.4301)
- suitable for primary drainage
- grate width: 60 mm

finish	code no.	Euro
Chrome	56047000	479.00
Brushed Bronze	56047140	588.00
Brushed Black Chrome	56047340	588.00
Matt Black	56047670	479.00
Matt White	56047700	479.00
Brushed Stainless Steel	56047800	342.00
Polished Gold Optic	56047990	588.00

Resizable Cover Length · Quick Clean · Two-sided Installation

Required parts (choose one)

		code no.	Euro
NEW	· **uBox universal** Base set for finish sets for standard installation	01001180	160.00
NEW	· **uBox universal** Base set for finish sets for flat installation	01000180	160.00
NEW	· **uBox universal** Base set for finish sets for vertical installation	01002180	160.00

Alternative products:

		finish	code no.	Euro
NEW	· **RainDrain Flex** Finish set shower drain 1200 cuttable for wall mounting	Chrome	56054000	479.00
		Brushed Bronze	56054140	588.00
		Brushed Black Chrome	56054340	588.00
		Matt Black	56054670	479.00
		Matt White	56054700	479.00
		Brushed Stainless Steel	56054800	342.00
		Polished Gold Optic	56054990	588.00

NEW



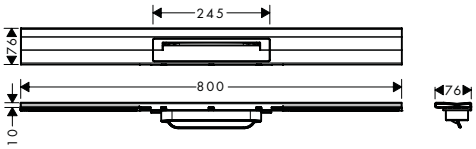

RainDrain Flex Finish set shower drain 700 cuttable for wall mounting

- consists of: design grate with removable cover, Dryphon
- can be shortened on site
- easy to clean surface
- height adjustable by 10 mm
- up to 60 l/min drainage capacity
- where to use: new construction, renovation
- grate removal tool allows easy removal of the finish set
- with integrated slope
- type of odour seal: mechanical
- mounting type: wall-mounted
- grate material: Stainless Steel 304 (1.4301)
- suitable for primary drainage
- grate width: 76 mm

	finish	code no.	Euro
	Chrome	56050000	389.00
	Brushed Bronze	56050140	478.00
	Brushed Black Chrome	56050340	478.00
	Matt Black	56050670	389.00
	Matt White	56050700	389.00
	Brushed Stainless Steel	56050800	278.00
	Polished Gold Optic	56050990	478.00

Resizable Cover Length · Quick Clean · Three-sided Installation

Required parts (choose one)

NEW	· **uBox universal** Base set for finish sets for standard installation	01001180	160.00
NEW	· **uBox universal** Base set for finish sets for flat installation	01000180	160.00
NEW	· **uBox universal** Base set for finish sets for vertical installation	01002180	160.00

Alternative products:

NEW	· **RainDrain Flex** Finish set shower drain 700 cuttable	Chrome	56043000	389.00
		Brushed Bronze	56043140	478.00
		Brushed Black Chrome	56043340	478.00
		Matt Black	56043670	389.00
		Matt White	56043700	389.00
		Brushed Stainless Steel	56043800	278.00
		Polished Gold Optic	56043990	478.00

Measurements within scale drawings are in mm.

Technical specifications and units of measure are subject to change.

NEW



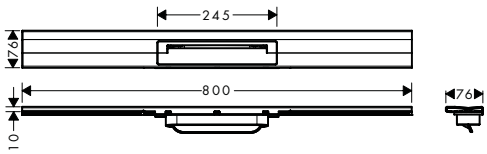

RainDrain Flex Finish set shower drain 800 cuttable for wall mounting

- consists of: design grate with removable cover, Dryphon
- can be shortened on site
- easy to clean surface
- height adjustable by 10 mm
- up to 60 l/ min drainage capacity
- where to use: new construction, renovation
- grate removal tool allows easy removal of the finish set
- with integrated slope
- type of odour seal: mechanical
- mounting type: wall-mounted
- grate material: Stainless Steel 304 (1.4301)
- suitable for primary drainage
- grate width: 76 mm

	finish	code no.	Euro
	Chrome	56051000	399.00
	Brushed Bronze	56051140	490.00
	Brushed Black Chrome	56051340	490.00
	Matt Black	56051670	399.00
	Matt White	56051700	399.00
	Brushed Stainless Steel	56051800	285.00
	Polished Gold Optic	56051990	490.00

Resizable Cover Length | Quick Clean | Three-sided Installation

Required parts (choose one)

NEW	· **uBox universal** Base set for finish sets for standard installation	01001180	160.00
NEW	· **uBox universal** Base set for finish sets for flat installation	01000180	160.00
NEW	· **uBox universal** Base set for finish sets for vertical installation	01002180	160.00

Alternative products:

NEW	· **RainDrain Flex** Finish set shower drain 800 cuttable	Chrome	56044000	399.00
		Brushed Bronze	56044140	490.00
		Brushed Black Chrome	56044340	490.00
		Matt Black	56044670	399.00
		Matt White	56044700	399.00
		Brushed Stainless Steel	56044800	285.00
		Polished Gold Optic	56044990	490.00

Measurements within scale drawings are in mm.

Technical specifications and units of measure are subject to change.

NEW



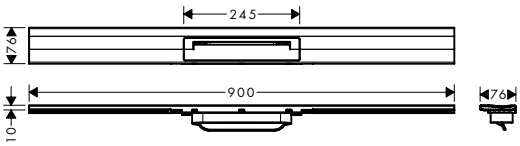

RainDrain Flex Finish set shower drain 900 cuttable for wall mounting

- consists of: design grate with removable cover, Dryphon
- can be shortened on site
- easy to clean surface
- height adjustable by 10 mm
- up to 60 l/ min drainage capacity
- where to use: new construction, renovation
- grate removal tool allows easy removal of the finish set
- with integrated slope
- type of odour seal: mechanical
- mounting type: wall-mounted
- grate material: Stainless Steel 304 (1.4301)
- suitable for primary drainage
- grate width: 76 mm

	finish	code no.	Euro
	Chrome	56052000	434.00
	Brushed Bronze	56052140	533.00
	Brushed Black Chrome	56052340	533.00
	Matt Black	56052670	434.00
	Matt White	56052700	434.00
	Brushed Stainless Steel	56052800	310.00
	Polished Gold Optic	56052990	533.00

Resizable Cover Length · Quick Clean · Three-sided Installation

Required parts (choose one)

NEW	· **uBox universal** Base set for finish sets for standard installation	01001180	160.00
NEW	· **uBox universal** Base set for finish sets for flat installation	01000180	160.00
NEW	· **uBox universal** Base set for finish sets for vertical installation	01002180	160.00

Alternative products:

NEW	· **RainDrain Flex** Finish set shower drain 900 cuttable	Chrome	56045000	434.00
		Brushed Bronze	56045140	533.00
		Brushed Black Chrome	56045340	533.00
		Matt Black	56045670	434.00
		Matt White	56045700	434.00
		Brushed Stainless Steel	56045800	310.00
		Polished Gold Optic	56045990	533.00

Measurements within scale drawings are in mm.

Technical specifications and units of measure are subject to change.

NEW

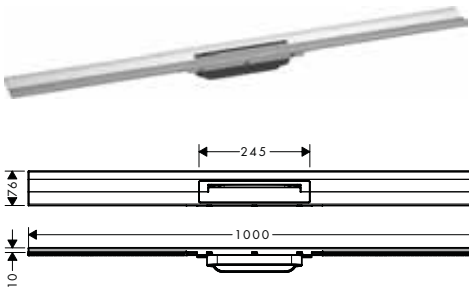

RainDrain Flex Finish set shower drain 1000 cuttable for wall mounting

- consists of: design grate with removable cover, Dryphon
- can be shortened on site
- easy to clean surface
- height adjustable by 10 mm
- up to 60 l/ min drainage capacity
- where to use: new construction, renovation
- grate removal tool allows easy removal of the finish set
- with integrated slope
- type of odour seal: mechanical
- mounting type: wall-mounted
- grate material: Stainless Steel 304 (1.4301)
- suitable for primary drainage
- grate width: 76 mm

	finish	code no.	Euro
	Chrome	56053000	445.00
	Brushed Bronze	56053140	547.00
	Brushed Black Chrome	56053340	547.00
	Matt Black	56053670	445.00
	Matt White	56053700	445.00
	Brushed Stainless Steel	56053800	318.00
	Polished Gold Optic	56053990	547.00

Resizable Cover Length · Quick Clean · Three-sided Installation

Required parts (choose one)

NEW	· **uBox universal** Base set for finish sets for standard installation	01001180	160.00
NEW	· **uBox universal** Base set for finish sets for flat installation	01000180	160.00
NEW	· **uBox universal** Base set for finish sets for vertical installation	01002180	160.00

Alternative products:

NEW	· **RainDrain Flex** Finish set shower drain 1000 cuttable	Chrome	56046000	445.00
		Brushed Bronze	56046140	547.00
		Brushed Black Chrome	56046340	547.00
		Matt Black	56046670	445.00
		Matt White	56046700	445.00
		Brushed Stainless Steel	56046800	318.00
		Polished Gold Optic	56046990	547.00

NEW



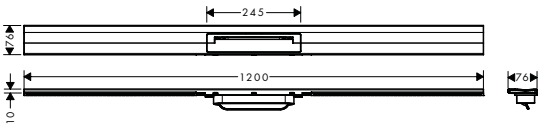

RainDrain Flex Finish set shower drain 1200 cuttable for wall mounting

- consists of: design grate with removable cover, Dryphon
- can be shortened on site
- easy to clean surface
- height adjustable by 10 mm
- up to 60 l/ min drainage capacity
- where to use: new construction, renovation
- grate removal tool allows easy removal of the finish set
- with integrated slope
- type of odour seal: mechanical
- mounting type: wall-mounted
- grate material: Stainless Steel 304 (1.4301)
- suitable for primary drainage
- grate width: 76 mm

	finish	code no.	Euro
	Chrome	56054000	479.00
	Brushed Bronze	56054140	588.00
	Brushed Black Chrome	56054340	588.00
	Matt Black	56054670	479.00
	Matt White	56054700	479.00
	Brushed Stainless Steel	56054800	342.00
	Polished Gold Optic	56054990	588.00

Resizable Cover Length · Quick Clean · Three-sided Installation

Required parts (choose one)

NEW	· **uBox universal** Base set for finish sets for standard installation	01001180	160.00
NEW	· **uBox universal** Base set for finish sets for flat installation	01000180	160.00
NEW	· **uBox universal** Base set for finish sets for vertical installation	01002180	160.00

Alternative products:

NEW	· **RainDrain Flex** Finish set shower drain 1200 cuttable	Chrome	56047000	479.00
		Brushed Bronze	56047140	588.00
		Brushed Black Chrome	56047340	588.00
		Matt Black	56047670	479.00
		Matt White	56047700	479.00
		Brushed Stainless Steel	56047800	342.00
		Polished Gold Optic	56047990	588.00

Measurements within scale drawings are in mm.

Technical specifications and units of measure are subject to change.

RainDrain Match

NEW



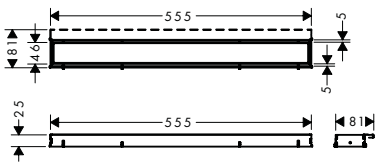

RainDrain Match Finish set shower drain 600 with height adjustable frame

- consists of: design grate, height adjustable frame, wall installation flange, Dryphon
- grate tileable on the rear, except for glass finishes (-450 and -610)
- easy to clean surface
- easy adjustment to tile thickness with height adjustable frame (7 – 18 mm)
- up to 60 l/ min drainage capacity
- where to use: new construction, renovation
- tile thickness: up to 18 mm
- suitable for any type of tile
- grate removal tool allows easy removal of the finish set
- type of odour seal: mechanical
- mounting type: wall-mounted, free in the floor
- wall mounting possible
- tile inlay depth: 12 mm
- grate material: Stainless Steel 304 (1.4301)
- suitable for primary and secondary drainage
- frame width: 62 mm
- grate width: 46 mm
- suitable for Rainmaker Select products with glass finish (-450 and -610)

finish	code no.	Euro
Chrome	56036000	254.00
White	56036450	406.00
Black	56036610	406.00
Matt Black	56036670	372.00
Matt White	56036700	372.00
Brushed Stainless Steel	56036800	169.00



Required parts (choose one)

NEW	· **uBox universal** Complete set for standard installation - 600 for shower drains finish sets	56022180	373.00
NEW	· **uBox universal** Complete set for flat installation - 600 for shower drains finish sets	56016180	373.00

Measurements within scale drawings are in mm.

Technical specifications and units of measure are subject to change.

NEW



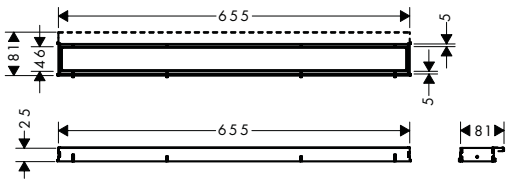

RainDrain Match Finish set shower drain 700 with height adjustable frame

- consists of: design grate, height adjustable frame, wall installation flange, Dryphon
- grate tileable on the rear, except for glass finishes (-450 and -610)
- easy to clean surface
- easy adjustment to tile thickness with height adjustable frame (7 – 18 mm)
- up to 60 l/min drainage capacity
- where to use: new construction, renovation
- tile thickness: up to 18 mm
- suitable for any type of tile
- grate removal tool allows easy removal of the finish set
- type of odour seal: mechanical
- mounting type: wall-mounted, free in the floor
- wall mounting possible
- tile inlay depth: 12 mm
- grate material: Stainless Steel 304 (1.4301)
- suitable for primary and secondary drainage
- frame width: 62 mm
- grate width: 46 mm
- suitable for Rainmaker Select products with glass finish (-450 and -610)

	finish	code no.	Euro
	Chrome	56037000	270.00
	White	56037450	432.00
	Black	56037610	432.00
	Matt Black	56037670	396.00
	Matt White	56037700	396.00
	Brushed Stainless Steel	56037800	180.00



Required parts (choose one)

NEW	· **uBox universal** Complete set for standard installation - 700 for shower drains finish sets	56023180	375.00
NEW	· **uBox universal** Complete set for flat installation - 700 for shower drains finish sets	56017180	375.00

Measurements within scale drawings are in mm.

Technical specifications and units of measure are subject to change.

NEW



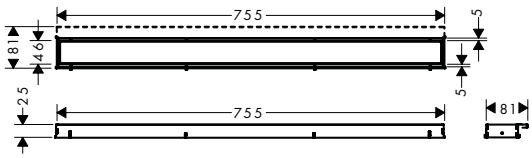

RainDrain Match Finish set shower drain 800 with height adjustable frame

- consists of: design grate, height adjustable frame, wall installation flange, Dryphon
- grate tileable on the rear, except for glass finishes (-450 and -610)
- easy to clean surface
- easy adjustment to tile thickness with height adjustable frame (7 – 18 mm)
- up to 60 l/ min drainage capacity
- where to use: new construction, renovation
- tile thickness: up to 18 mm
- suitable for any type of tile
- grate removal tool allows easy removal of the finish set
- type of odour seal: mechanical
- mounting type: wall-mounted, free in the floor
- wall mounting possible
- tile inlay depth: 12 mm
- grate material: Stainless Steel 304 (1.4301)
- suitable for primary and secondary drainage
- frame width: 62 mm
- grate width: 46 mm
- suitable for Rainmaker Select products with glass finish (-450 and -610)

finish	code no.	Euro
Chrome	56038000	281.00
White	56038450	449.00
Black	56038610	449.00
Matt Black	56038670	411.00
Matt White	56038700	411.00
Brushed Stainless Steel	56038800	187.00



Required parts (choose one)

NEW	· **uBox universal** Complete set for standard installation - 800 for shower drains finish sets	56024180	379.00
NEW	· **uBox universal** Complete set for flat installation - 800 for shower drains finish sets	56018180	379.00

Measurements within scale drawings are in mm.

NEW

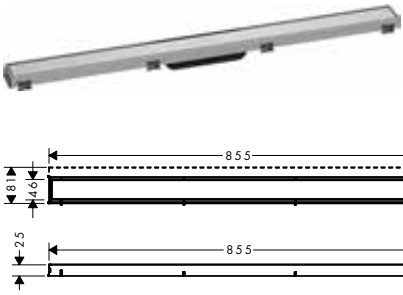

RainDrain Match Finish set shower drain 900 with height adjustable frame

- consists of: design grate, height adjustable frame, wall installation flange, Dryphon
- grate tileable on the rear, except for glass finishes (-450 and -610)
- easy to clean surface
- easy adjustment to tile thickness with height adjustable frame (7 – 18 mm)
- up to 60 l/ min drainage capacity
- where to use: new construction, renovation
- tile thickness: up to 18 mm
- suitable for any type of tile
- grate removal tool allows easy removal of the finish set
- type of odour seal: mechanical
- mounting type: wall-mounted, free in the floor
- wall mounting possible
- tile inlay depth: 12 mm
- grate material: Stainless Steel 304 (1.4301)
- suitable for primary and secondary drainage
- frame width: 62 mm
- grate width: 46 mm
- suitable for Rainmaker Select products with glass finish (-450 and -610)

finish	code no.	Euro
Chrome	56040000	290.00
White	56040450	463.00
Black	56040610	463.00
Matt Black	56040670	425.00
Matt White	56040700	425.00
Brushed Stainless Steel	56040800	193.00



Required parts (choose one)

NEW	· **uBox universal** Complete set for standard installation - 900 for shower drains finish sets	56025180	385.00
NEW	· **uBox universal** Complete set for flat installation - 900 for shower drains finish sets	56019180	385.00

Measurements within scale drawings are in mm.

Technical specifications and units of measure are subject to change.

NEW



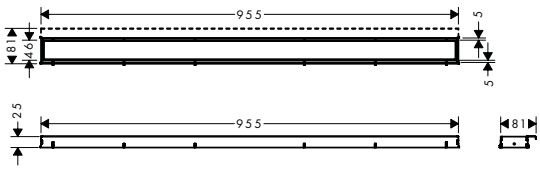

RainDrain Match Finish set shower drain 1000 with height adjustable frame

- consists of: design grate, height adjustable frame, wall installation flange, Dryphon
- grate tileable on the rear, except for glass finishes (-450 and -610)
- easy to clean surface
- easy adjustment to tile thickness with height adjustable frame (7 – 18 mm)
- up to 60 l/ min drainage capacity
- where to use: new construction, renovation
- tile thickness: up to 18 mm
- suitable for any type of tile
- grate removal tool allows easy removal of the finish set
- type of odour seal: mechanical
- mounting type: wall-mounted, free in the floor
- wall mounting possible
- tile inlay depth: 12 mm
- grate material: Stainless Steel 304 (1.4301)
- suitable for primary and secondary drainage
- frame width: 62 mm
- grate width: 46 mm
- suitable for Rainmaker Select products with glass finish (-450 and -610)

finish	code no.	Euro
Chrome	56041000	296.00
White	56041450	473.00
Black	56041610	473.00
Matt Black	56041670	433.00
Matt White	56041700	433.00
Brushed Stainless Steel	56041800	197.00



Required parts (choose one)

NEW	· **uBox universal** Complete set for standard installation - 1000 for shower drains finish sets	56026180	393.00
NEW	· **uBox universal** Complete set for flat installation - 1000 for shower drains finish sets	56020180	393.00

NEW

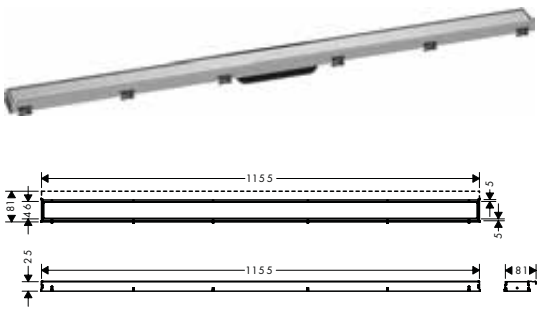

RainDrain Match Finish set shower drain 1200 with height adjustable frame

- consists of: design grate, height adjustable frame, wall installation flange, Dryphon
- grate tileable on the rear, except for glass finishes (-450 and -610)
- easy to clean surface
- easy adjustment to tile thickness with height adjustable frame (7 – 18 mm)
- up to 60 l/ min drainage capacity
- where to use: new construction, renovation
- tile thickness: up to 18 mm
- suitable for any type of tile
- grate removal tool allows easy removal of the finish set
- type of odour seal: mechanical
- mounting type: wall-mounted, free in the floor
- wall mounting possible
- tile inlay depth: 12 mm
- grate material: Stainless Steel 304 (1.4301)
- suitable for primary and secondary drainage
- frame width: 62 mm
- grate width: 46 mm
- suitable for Rainmaker Select products with glass finish (-450 and -610)

	finish	code no.	Euro
	Chrome	56042000	321.00
	White	56042450	514.00
	Black	56042610	514.00
	Matt Black	56042670	471.00
	Matt White	56042700	471.00
	Brushed Stainless Steel	56042800	214.00



Required parts (choose one)

NEW	· **uBox universal** Complete set for standard installation - 1200 for shower drains finish sets	56027180	407.00
NEW	· **uBox universal** Complete set for flat installation - 1200 for shower drains finish sets	56021180	407.00

Measurements within scale drawings are in mm.

Technical specifications and units of measure are subject to change.

RainDrain Rock

		finish	code no.	Euro
NEW	**RainDrain Rock** Finish set shower drain 600 cut on size and tileable · consists of: tileable grate, integrated grate removal tool, Dryphon · frameless design · can be shortened on site · height adjustable grate · up to 60 l/ min drainage capacity · where to use: new construction, renovation · tile thickness: up to 40 mm · suitable for every type of tile and tile thickness · grate removal tool allows easy removal of the finish set · easy to clean · type of odour seal: mechanical · mounting type: free in the floor, two-sided · 50 mm excess length on both sides · can be shortened to a minimum of 600 mm · grate material: Stainless Steel 304 (1.4301) · suitable for primary drainage · grate width: 58 mm		56029000	125.00
	Required parts (choose one)			
NEW	· **uBox universal** Complete set for standard installation - 600 for shower drains finish sets		56022180	373.00
NEW	· **uBox universal** Complete set for flat installation - 600 for shower drains finish sets		56016180	373.00
NEW	**RainDrain Rock** Finish set shower drain 700 cut on size and tileable · consists of: tileable grate, integrated grate removal tool, Dryphon · frameless design · can be shortened on site · height adjustable grate · up to 60 l/ min drainage capacity · where to use: new construction, renovation · tile thickness: up to 40 mm · suitable for every type of tile and tile thickness · grate removal tool allows easy removal of the finish set · easy to clean · type of odour seal: mechanical · mounting type: free in the floor, two-sided · 50 mm excess length on both sides · can be shortened to a minimum of 700 mm · grate material: Stainless Steel 304 (1.4301) · suitable for primary drainage · grate width: 58 mm		56030000	131.00
	Required parts (choose one)			
NEW	· **uBox universal** Complete set for standard installation - 700 for shower drains finish sets		56023180	375.00
NEW	· **uBox universal** Complete set for flat installation - 700 for shower drains finish sets		56017180	375.00



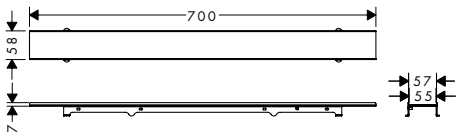



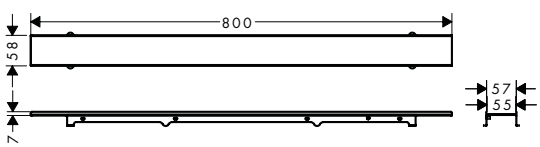

Measurements within scale drawings are in mm.

Technical specifications and units of measure are subject to change.

		finish	code no.	Euro
NEW	**RainDrain Rock** Finish set shower drain 800 cut on size and tileable · consists of: tileable grate, integrated grate removal tool, Dryphon · frameless design · can be shortened on site · height adjustable grate · up to 60 l/ min drainage capacity · where to use: new construction, renovation · tile thickness: up to 40 mm · suitable for every type of tile and tile thickness · easy to clean · grate removal tool allows easy removal of the finish set · type of odour seal: mechanical · mounting type: free in the floor, two-sided · 50 mm excess length on both sides · can be shortened to a minimum of 800 mm · grate material: Stainless Steel 304 (1.4301) · suitable for primary drainage · grate width: 58 mm		56031000 Resizable Cover Length · Two-sided Installation · In-floor Installation	148.00
	Required parts (choose one)			
NEW	· **uBox universal** Complete set for standard installation - 800 for shower drains finish sets		56024180	379.00
NEW	· **uBox universal** Complete set for flat installation - 800 for shower drains finish sets		56018180	379.00
NEW	**RainDrain Rock** Finish set shower drain 900 cut on size and tileable · consists of: tileable grate, integrated grate removal tool, Dryphon · frameless design · can be shortened on site · height adjustable grate · up to 60 l/ min drainage capacity · where to use: new construction, renovation · tile thickness: up to 40 mm · suitable for every type of tile and tile thickness · easy to clean · grate removal tool allows easy removal of the finish set · type of odour seal: mechanical · mounting type: free in the floor, two-sided · 50 mm excess length on both sides · can be shortened to a minimum of 900 mm · grate material: Stainless Steel 304 (1.4301) · suitable for primary drainage · grate width: 58 mm		56032000 Resizable Cover Length · Two-sided Installation · In-floor Installation	151.00
	Required parts (choose one)			
NEW	· **uBox universal** Complete set for standard installation - 900 for shower drains finish sets		56025180	385.00
NEW	· **uBox universal** Complete set for flat installation - 900 for shower drains finish sets		56019180	385.00

Measurements within scale drawings are in mm.

Technical specifications and units of measure are subject to change.

	finish	code no.	Euro

NEW

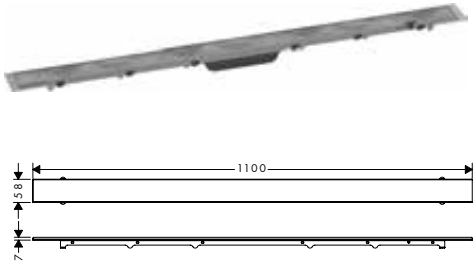

RainDrain Rock Finish set shower drain 1000 cut on size and tileable

56033000 — 157.00

Resizable Cover Length | Two-sided Installation | In-floor Installation

- consists of: tileable grate, integrated grate removal tool, Dryphon
- frameless design
- can be shortened on site
- height adjustable grate
- up to 60 l/ min drainage capacity
- where to use: new construction, renovation
- tile thickness: up to 40 mm
- suitable for every type of tile and tile thickness
- easy to clean
- grate removal tool allows easy removal of the finish set
- type of odour seal: mechanical
- mounting type: free in the floor, two-sided
- 50 mm excess length on both sides
- can be shortened to a minimum of 1000 mm
- grate material: Stainless Steel 304 (1.4301)
- suitable for primary drainage
- grate width: 58 mm

Required parts (choose one)

NEW	· **uBox universal** Complete set for standard installation - 1000 for shower drains finish sets	56026180	393.00
NEW	· **uBox universal** Complete set for flat installation - 1000 for shower drains finish sets	56020180	393.00

NEW

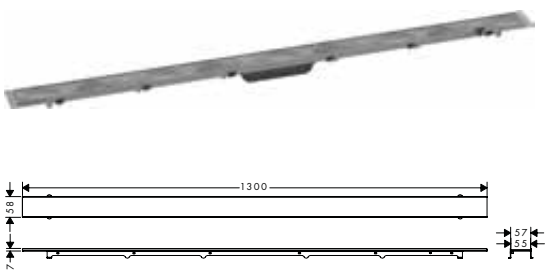

RainDrain Rock Finish set shower drain 1200 cut on size and tileable

56034000 — 180.00

Resizable Cover Length | Two-sided Installation | In-floor Installation

- consists of: tileable grate, integrated grate removal tool, Dryphon
- frameless design
- can be shortened on site
- height adjustable grate
- up to 60 l/ min drainage capacity
- where to use: new construction, renovation
- tile thickness: up to 40 mm
- suitable for every type of tile and tile thickness
- easy to clean
- grate removal tool allows easy removal of the finish set
- type of odour seal: mechanical
- mounting type: free in the floor, two-sided
- 50 mm excess length on both sides
- can be shortened to a minimum of 1200 mm
- grate material: Stainless Steel 304 (1.4301)
- suitable for primary drainage
- grate width: 58 mm

Required parts (choose one)

NEW	· **uBox universal** Complete set for standard installation - 1200 for shower drains finish sets	56027180	407.00
NEW	· **uBox universal** Complete set for flat installation - 1200 for shower drains finish sets	56021180	407.00

Measurements within scale drawings are in mm.

Technical specifications and units of measure are subject to change.

RainDrain Spot

		finish	code no.	Euro
NEW	**RainDrain Spot** Complete set 150/150 point drain and installation set · consists of: design grate, base set, siphon, pre-assembled sealing membrane, screed protection cover · tileable on the back side · water seal: 50 mm · connection diameter: DN50 · direction of outlet: pre-assembled horizontally, can be used vertically · easy to clean surface · height adjustable by 10 mm · up to 35 l/min drainage capacity · where to use: new construction, renovation · removable Siphon · rotatable and adjustable siphon body · easy to clean siphon · type of odour seal: fluid · minimal installation height 80 mm · pre-assembled sealing membrane · material siphon: ABS · mounting type: free in the floor · grate material: Stainless Steel 304 (1.4301) · grate width: 146 mm	Brushed Stainless Steel	56055800	107.00
	Optional parts:			
NEW	· **RainDrain Spot** Height compensation supplementary piece		56056000	20.00

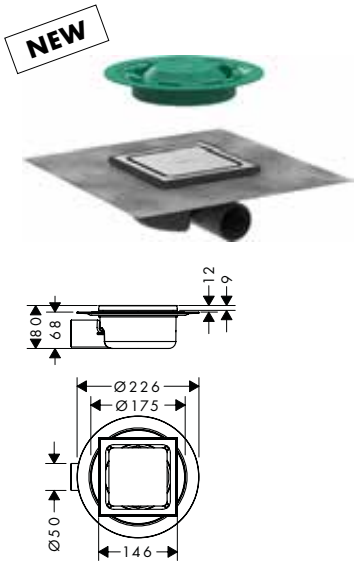

		finish	code no.	Euro
NEW	**RainDrain Spot** Complete set 150/150 point drain tileable rear cover and installation set · consists of: design grate, base set, siphon, pre-assembled sealing membrane, screed protection cover · tileable on the back side · water seal: 50 mm · connection diameter: DN50 · direction of outlet: pre-assembled horizontally, can be used vertically · frameless design · easy to clean surface · height adjustable by 10 mm · up to 35 l/min drainage capacity · where to use: new construction, renovation · suitable for every type of tile and tile thickness · removable Siphon · rotatable and adjustable siphon body · easy to clean siphon · type of odour seal: fluid · minimal installation height 95 mm · pre-assembled sealing membrane · material siphon: ABS · mounting type: free in the floor · grate material: Stainless Steel 304 (1.4301) · grate width: 146 mm	Brushed Stainless Steel	56112800	107.00
	Optional parts:			
NEW	· **RainDrain Spot** Height compensation supplementary piece		56056000	20.00

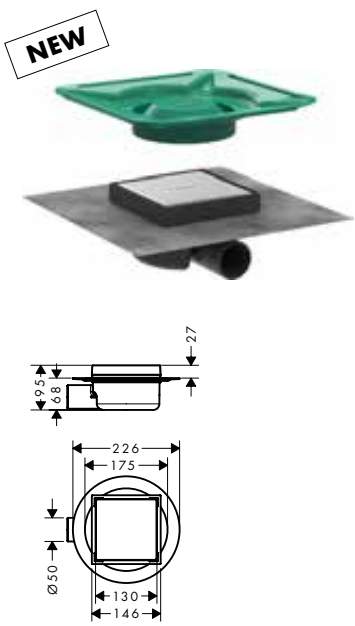

Measurements within scale drawings are in mm.

Technical specifications and units of measure are subject to change.

	finish	code no.	Euro
NEW  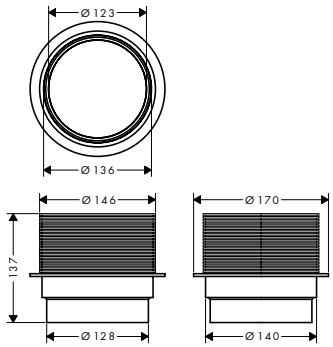		56056000	20.00

RainDrain Spot Height compensation supplementary piece

- suitable for all RainDrain Spot point drains

Wastes for shower trays



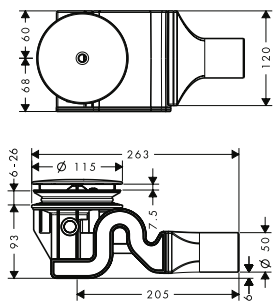

Raindrain Complete set waste set 90 XXL	Chrome	60067000	71.50

- consists of: basic set, finish set
- suitable for shower trays with Ø 90 mm waste outlet
- drainage capacity 51 l/ min at 15 mm water level
- waste pipe Ø 50 mm
- odour trap - backwater height is 50 mm
- stainless steel finish set
- opening for cleaning



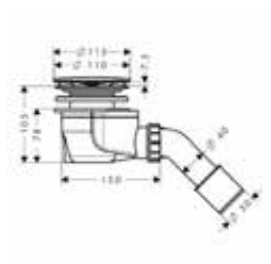

Staro Complete set waste set 90	Chrome	60056000	58.50

- consists of: basic set, finish set
- suitable for shower trays with Ø 90 mm waste outlet
- drainage capacity 29 l/ min at 15 mm water level
- PE screw connection 40/ 50 mm
- waste pipe Ø 50 mm
- odour trap - backwater height is 50 mm
- stainless steel finish set
- self-cleaning

Measurements within scale drawings are in mm.

Technical specifications and units of measure are subject to change.

Bath filler with wastes and overflow for bath tubs

	finish	code no.	Euro
 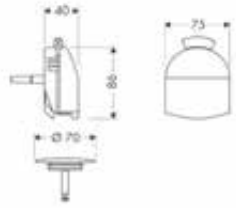	**Exafill** Finish set bath filler, waste and overflow set · consists of: cover, security plug · TÜV certified · suitable for standard and special bath tubs · triple aerator · jet former can be adjusted by 20° · maximum flow rate at 3 bar: 38 l/min	Chrome	58127000	179.30
	Required parts:			
	· **Exafill** Basic set bath filler, waste and overflow set for standard bath tubs		58125180	123.60
	· **Exafill** Basic set bath filler, waste and overflow set for special bath tubs		58126180	173.30
	Optional parts:			
	· Flexible connection tube 80 cm		58192000	109.70
 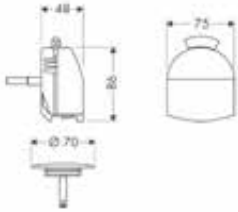	**Exafill** Finish set bath filler, waste and overflow set plus · consists of: cover, security plug · TÜV certified · suitable for standard and special bath tubs, bath tubs with recessed overflow opening · triple aerator · jet former can be adjusted by 20° · maximum flow rate at 3 bar: 38 l/min	Chrome	58128000	212.70
	Required parts:			
	· **Exafill** Basic set bath filler, waste and overflow set for standard bath tubs		58125180	123.60
	· **Exafill** Basic set bath filler, waste and overflow set for special bath tubs		58126180	173.30
	Optional parts:			
	· Flexible connection tube 80 cm		58192000	109.70
 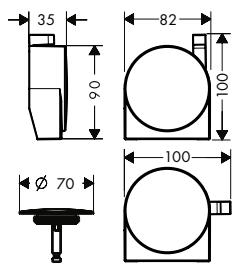	**Exafill S** Finish set bath filler, waste and overflow set · consists of: cover, security plug · TÜV certified · suitable for standard and special bath tubs · wide flood jet · jet former can be adjusted by 30° · maximum flow rate at 3 bar: 19 l/min	Chrome Brushed Bronze Brushed Black Chrome Matt Black Matt White Brushed Nickel Polished Gold Optic	58117000 58117140 58117340 58117670 58117700 58117820 58117990	164.80 247.20 247.20 230.70 230.70 247.20 247.20
	Required parts:			
	· **Exafill S** Basic set bath filler, waste and overflow set for standard bath tubs		58115180	113.50
	· **Exafill S** Basic set bath filler, waste and overflow set for special bath tubs		58116180	159.20
	Optional parts:			
	· Flexible connection tube 80 cm		58192000	109.70
 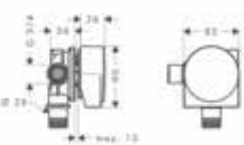	**Exafill** Finish set bath filler · maximum flow rate at 3 bar: 26 l/min · overflow height adjustable by 25 mm	Chrome	58112000	89.20
	Required parts:			
	· Waste set push-open for bath tubs	Chrome	50107000	58.10
	Optional parts:			
	· Bath tub trap		56373000	13.00

Measurements within scale drawings are in mm.

Technical specifications and units of measure are subject to change.

	finish	code no.	Euro
 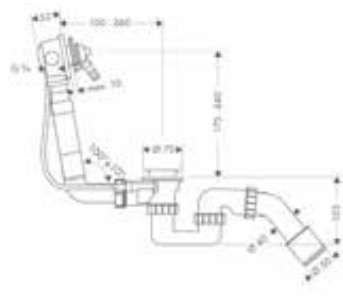	**Exafill** Basic set bath filler, waste and overflow set for standard bath tubs · consists of: basic set, bath tub trap · suitable for standard bath tubs · bowden cable length 520 mm · odour trap - backwater height is 50 mm · supply hose water connection left and right DN20		58125180	123.60
	Required parts:			
	· **Exafill** Finish set bath filler, waste and overflow set	Chrome	58127000	179.30
	· **Exafill** Finish set bath filler, waste and overflow set plus	Chrome	58128000	212.70
	Optional parts:			
	· Flexible connection tube 80 cm		58192000	109.70
 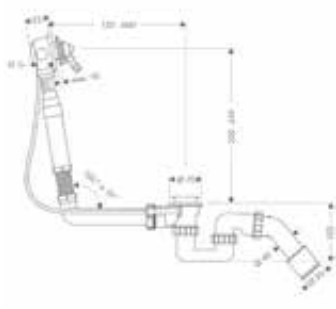	**Exafill** Basic set bath filler, waste and overflow set for special bath tubs · consists of: basic set, bath tub trap · suitable for special bath tubs, with bellows for bath tubs with slanted bath rim · bowden cable length 780 mm · odour trap - backwater height is 50 mm · supply hose water connection left and right DN20		58126180	173.30
	Required parts:			
	· **Exafill** Finish set bath filler, waste and overflow set	Chrome	58127000	179.30
	· **Exafill** Finish set bath filler, waste and overflow set plus	Chrome	58128000	212.70
	Optional parts:			
	· Flexible connection tube 80 cm		58192000	109.70
 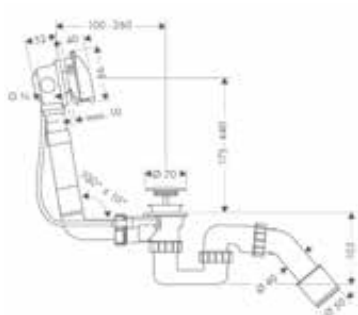	**Exafill** Complete set bath filler, waste and overflow set for standard bath tubs · consists of: bath tub trap, basic set, finish set · TÜV certified · suitable for standard bath tubs · bowden cable length 520 mm · odour trap - backwater height is 50 mm · supply hose water connection left and right DN20	Chrome	58123000	277.40
	Consisting of: · **Exafill** Basic set bath filler, waste and overflow set for standard bath tubs (# 58125180) · **Exafill** Finish set bath filler, waste and overflow set (# 58127000) · Bath tub trap (# 56373000)			
	Optional parts:			
	· Flexible connection tube 80 cm		58192000	109.70

Measurements within scale drawings are in mm.

	finish	code no.	Euro
			
Exafill S Basic set bath filler, waste and overflow set for standard bath tubs · consists of: basic set, bath tub trap · suitable for standard bath tubs, with bellows for bath tubs with slanted bath rim · bowden cable length 520 mm · odour trap - backwater height is 50 mm · supply hose water connection left DN20		58115180	113.50
Alternative products:			
· **Exafill S** Basic set bath filler, waste and overflow set for special bath tubs		58116180	159.20
Required parts:			
· **Exafill S** Finish set bath filler, waste and overflow set	Chrome	58117000	164.80
	Brushed Bronze	58117140	247.20
	Brushed Black Chrome	58117340	247.20
	Matt Black	58117670	230.70
	Matt White	58117700	230.70
	Brushed Nickel	58117820	247.20
	Polished Gold Optic	58117990	247.20
Optional parts:			
· Flexible connection tube 80 cm		58192000	109.70
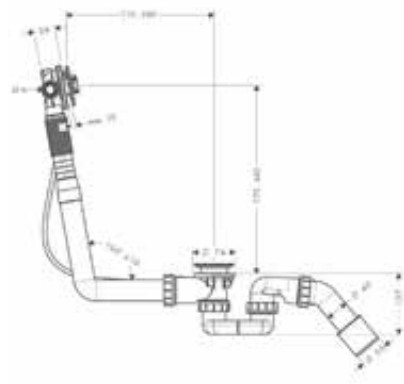			
			
Exafill S Basic set bath filler, waste and overflow set for special bath tubs · consists of: basic set, bath tub trap · suitable for special bath tubs, with bellows for bath tubs with slanted bath rim · bowden cable length 780 mm · odour trap - backwater height is 50 mm · supply hose water connection left DN20		58116180	159.20
Alternative products:			
· **Exafill S** Basic set bath filler, waste and overflow set for standard bath tubs		58115180	113.50
Required parts:			
· **Exafill S** Finish set bath filler, waste and overflow set	Chrome	58117000	164.80
	Brushed Bronze	58117140	247.20
	Brushed Black Chrome	58117340	247.20
	Matt Black	58117670	230.70
	Matt White	58117700	230.70
	Brushed Nickel	58117820	247.20
	Polished Gold Optic	58117990	247.20
Optional parts:			
· Flexible connection tube 80 cm		58192000	109.70
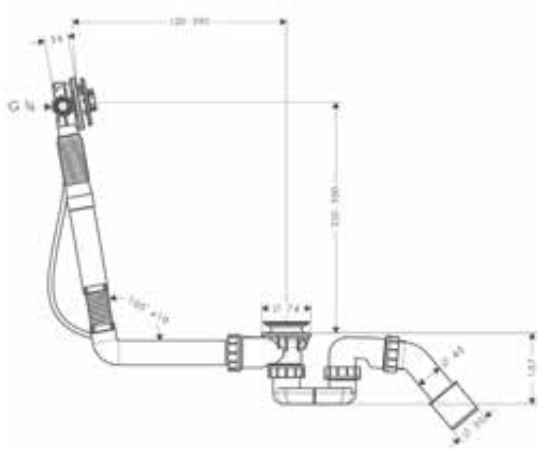			

Measurements within scale drawings are in mm.

Technical specifications and units of measure are subject to change.

	finish	code no.	Euro
 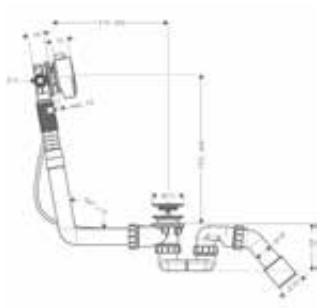 **Exafill S** Complete set bath filler, waste and overflow set for standard bath tubs · consists of: bath tub trap, basic set, finish set · TÜV certified · suitable for standard bath tubs, with bellows for bath tubs with slanted bath rim · bowden cable length 520 mm · odour trap - backwater height is 50 mm · supply hose water connection left DN20 **Consisting of:** · Bath tub trap (# 56373000) · **Exafill S** Basic set bath filler, waste and overflow set for standard bath tubs (# 58115180) · **Exafill S** Finish set bath filler, waste and overflow set (# 58117000)	Chrome	58113000	249.70
Optional parts:			
· Flexible connection tube 80 cm		58192000	109.70
  Flexible connection tube 80 cm · length 800 mm · version: 90° angle		58192000	109.70
 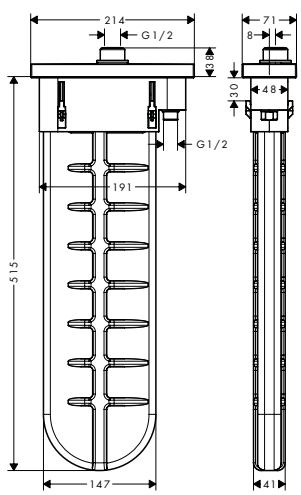 **sBox** Finish set square · consists of: hose box, shower hose, escutcheon · suitable for rim or tile mounted installation · 1 function · sBox for quiet, smooth and protected hose guidance · no additional maintenance opening required · bath rim width at least 100 mm · clamping range: 0 - 30 mm · connection dimension: DN15 · maximum pull-out length of hand shower 1.45 m · removable for service at any time · protected against backflow, according to DIN EN1717 · maximum flow rate at 3 bar: 9,5 l/min	Chrome Brushed Bronze Brushed Black Chrome Matt Black Matt White Polished Gold Optic	28010000 28010140 28010340 28010670 28010700 28010990	314.40 471.50 471.50 440.10 440.10 471.50
Alternative products:			
· **sBox** Finish set oval	Chrome Brushed Bronze Brushed Black Chrome Matt Black Matt White Polished Gold Optic	28020000 28020140 28020340 28020670 28020700 28020990	314.40 471.50 471.50 440.10 440.10 471.50
Required parts:			
· **sBox** Rim and tile mounted bath basic set		13560180	52.50
Optional parts:			
· **sBox** Installation plate for tile mounted installation		28016000	65.00
· **sBox** Mounting angle set for installation plate for tile mounted installation		28021000	162.60
· Rim mounted adapter 25°	Chrome	28071000	28.20

Measurements within scale drawings are in mm.

Technical specifications and units of measure are subject to change.

	finish	code no.	Euro



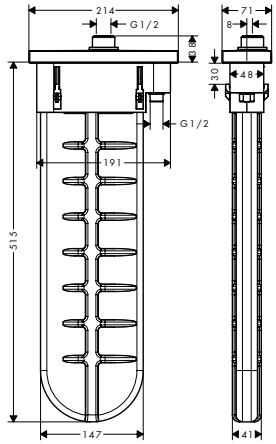

sBox Finish set oval

- consists of: hose box, shower hose, escutcheon
- suitable for rim or tile mounted installation
- 1 function
- sBox for quiet, smooth and protected hose guidance
- no additional maintenance opening required
- bath rim width at least 100 mm
- clamping range: 0 - 30 mm
- connection dimension: DN15
- maximum pull-out length of hand shower 1.45 m
- removable for service at any time
- protected against backflow, according to DIN EN1717
- maximum flow rate at 3 bar: 9,5 l/ min

	finish	code no.	Euro
	Chrome	28020000	314.40
	Brushed Bronze	28020140	471.50
	Brushed Black Chrome	28020340	471.50
	Matt Black	28020670	440.10
	Matt White	28020700	440.10
	Polished Gold Optic	28020990	471.50

Alternative products:

- **sBox** Finish set square

	Chrome	28010000	314.40
	Brushed Bronze	28010140	471.50
	Brushed Black Chrome	28010340	471.50
	Matt Black	28010670	440.10
	Matt White	28010700	440.10
	Polished Gold Optic	28010990	471.50

Required parts:

- **sBox** Rim and tile mounted bath basic set — 13560180 — 52.50

Optional parts:

- **sBox** Installation plate for tile mounted installation — 28016000 — 65.00
- **sBox** Mounting angle set for installation plate for tile mounted installation — 28021000 — 162.60
- Rim mounted adapter 25° — Chrome — 28071000 — 28.20



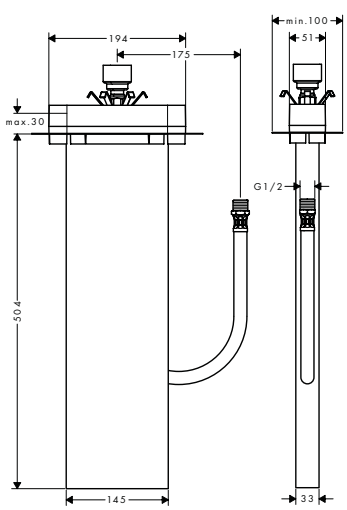

sBox Rim and tile mounted bath basic set

13560180 — 52.50

- suitable for rim or tile mounted installation
- 1 function
- connection thread G ½
- connection hose length: 600 mm
- bath rim width at least 100 mm
- drilling diameter on bath tub: two drilled holes Ø 50/51 mm and connection by sawing out required (consider template)
- clamping range: 0 - 30 mm
- connection dimension: DN15

Optional parts:

- **sBox** Installation plate for tile mounted installation — 28016000 — 65.00
- **sBox** Mounting angle set for installation plate for tile mounted installation — 28021000 — 162.60



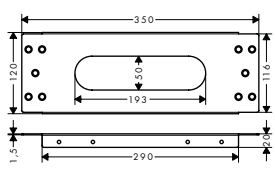

sBox Installation plate for tile mounted installation

28016000 — 65.00

- dimension: 350 x 120 mm

Measurements within scale drawings are in mm.

Technical specifications and units of measure are subject to change.

	finish	code no.	Euro
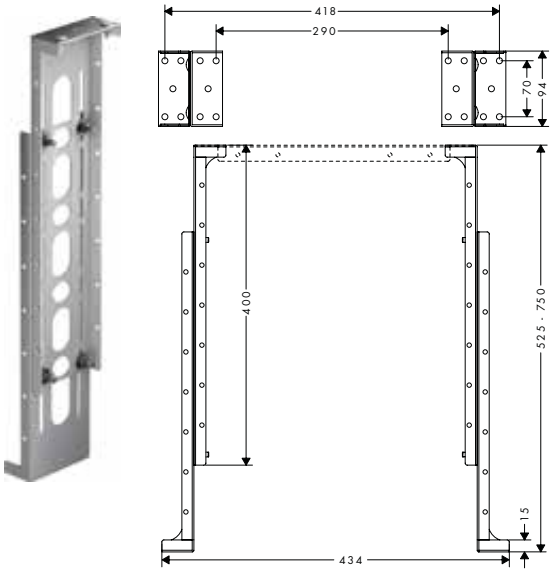 **sBox** Mounting angle set for installation plate for tile mounted installation · maximum mounting height: 750 mm · minimum mounting height: 400 mm · packaging unit: 2 pieces		28021000	162.60

Wastes and overflow for bath tubs





Flexaplus Finish set waste and overflow set

· consists of: turning handle, security plug
· suitable for standard and special bath tubs
· TÜV certified

Chrome	58185000	22.30
Brushed Bronze	58185140	33.40
Brushed Black	58185340	33.40
Chrome Matt Black	58185670	31.20
Matt White	58185700	31.20
Polished Gold Optic	58185990	33.40

Required parts:

· **Flexaplus** Basic set waste and overflow set for standard bath tubs	58140180	49.50
· **Flexaplus** Basic set waste and overflow set for special bath tubs	58141180	76.30



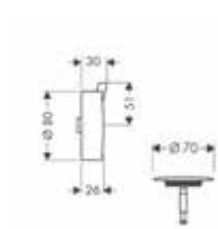

Flexaplus S Finish set waste and overflow set — Chrome — 58186000 — 34.10

· consists of: turning handle, security plug
· suitable for standard and special bath tubs

Required parts:

· **Flexaplus** Basic set waste and overflow set for standard bath tubs	58140180	49.50
· **Flexaplus** Basic set waste and overflow set for special bath tubs	58141180	76.30





Waste set push-open for bath tubs — Chrome — 50107000 — 58.10

Required parts:

· **Exafill** Finish set bath filler	Chrome	58112000	89.20

Optional parts:

· Bath tub trap	56373000	13.00

Measurements within scale drawings are in mm.

Technical specifications and units of measure are subject to change.

	finish	code no.	Euro
 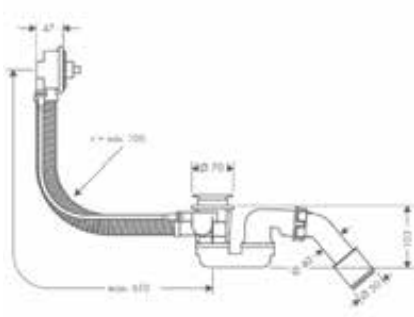	**Flexaplus** Basic set waste and overflow set for standard bath tubs · suitable for standard bath tubs · PE screw connection G 1½ x 40/ 50 mm · flexible overflow hose · bowden cable length 520 mm · odour trap - backwater height is 50 mm		58140180	49.50
	Required parts:			
	· **Flexaplus** Finish set waste and overflow set	Chrome	58185000	22.30
		Brushed Bronze	58185140	33.40
		Brushed Black Chrome	58185340	33.40
		Matt Black	58185670	31.20
		Matt White	58185700	31.20
		Polished Gold Optic	58185990	33.40
	· **Flexaplus S** Finish set waste and overflow set	Chrome	58186000	34.10
 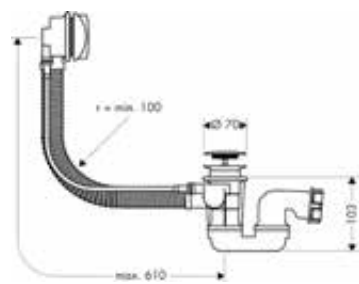	**Flexaplus** Basic set waste and overflow set for standard bath tubs and shower trays · suitable for standard bath tubs · PE screw connection G 1½ x 40/ 50 mm · flexible overflow hose · bowden cable length 520 mm · odour trap - backwater height is 50 mm	Chrome	58142000	70.40
 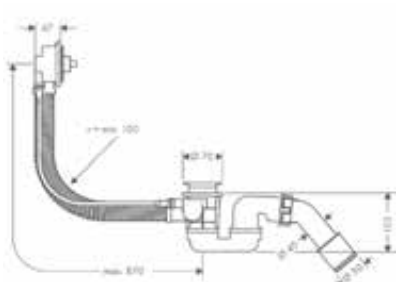	**Flexaplus** Basic set waste and overflow set for special bath tubs · suitable for special bath tubs · PE screw connection G 1½ x 40/ 50 mm · flexible overflow hose · bowden cable length 780 mm · odour trap - backwater height is 50 mm		58141180	76.30
	Required parts:			
	· **Flexaplus** Finish set waste and overflow set	Chrome	58185000	22.30
		Brushed Bronze	58185140	33.40
		Brushed Black Chrome	58185340	33.40
		Matt Black	58185670	31.20
		Matt White	58185700	31.20
		Polished Gold Optic	58185990	33.40
	· **Flexaplus S** Finish set waste and overflow set	Chrome	58186000	34.10

Measurements within scale drawings are in mm.

Technical specifications and units of measure are subject to change.

	finish	code no.	Euro
Flexaplus Complete set waste and overflow set for standard bath tubs	Chrome	58143000	70.40


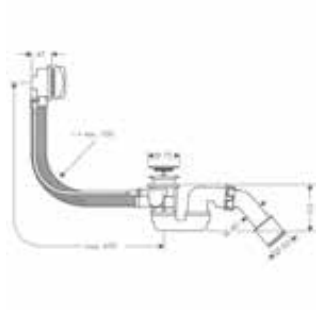

· consists of: basic set, finish set
· TÜV certified
· suitable for standard bath tubs
· PE screw connection G 1½ x 40/ 50 mm
· flexible overflow hose
· bowden cable length 520 mm
· odour trap - backwater height is 50 mm

Consisting of:
· **Flexaplus** Basic set waste and overflow set for standard bath tubs (# 58140180)
· **Flexaplus** Finish set waste and overflow set (# 58185000)

Flexaplus S Complete set waste and overflow set for standard bath tubs	Chrome	58150000	83.00


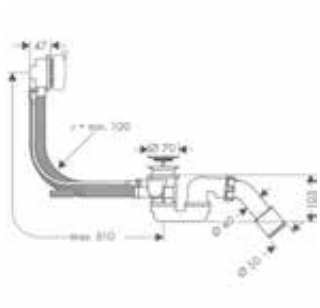

· consists of: basic set, finish set
· TÜV certified
· suitable for standard bath tubs
· PE screw connection G 1½ x 40/ 50 mm
· flexible overflow hose
· bowden cable length 520 mm
· odour trap - backwater height is 50 mm

Consisting of:
· **Flexaplus** Basic set waste and overflow set for standard bath tubs (# 58140180)
· **Flexaplus S** Finish set waste and overflow set (# 58186000)

Bath tub trap		56373000	13.00


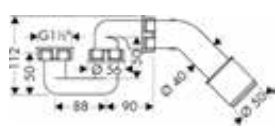

· PE screw connection G 1½ x 40/ 50 mm
· odour trap - backwater height is 50 mm

Wastes for basin/ bidet

Waste set pop-up for basin and bidet mixers	Chrome	94139000	63.70
	Brushed Bronze	94139140	118.40
	Brushed Black	94139340	118.40
	Chrome Matt Black	94139670	118.40
	Chrome Matt White	94139700	118.40
	Polished Gold Optic	94139990	95.70


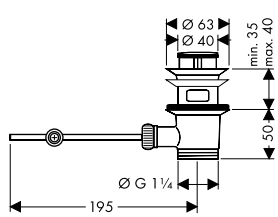

· operation via pull-rod
· for basins with overflow hole
· brass
· drain plug material brass
· connection dimension G 1¼

Waste set push-open for basin and bidet mixers	Chrome	50100000	58.90
	Brushed Bronze	50100140	88.40
	Brushed Black	50100340	88.40
	Chrome Matt Black	50100670	82.40
	Chrome Matt White	50100700	82.40
	Polished Gold Optic	50100990	88.40


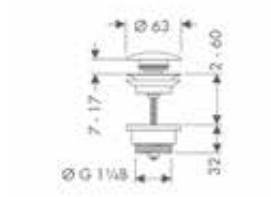

· operation with pressure plug
· for basins with overflow hole
· brass
· drain plug material brass
· connection dimension G 1¼

Measurements within scale drawings are in mm.

Technical specifications and units of measure are subject to change.

	finish	code no.	Euro



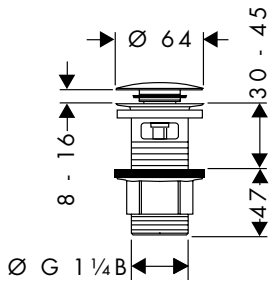

Waste set push-open for basin and bidet mixers

Chrome | 50105000 | 25.10

- operation with pressure plug
- for basins with overflow hole
- glass fibre reinforced plastic
- drain plug material stainless steel
- connection dimension G 1¼



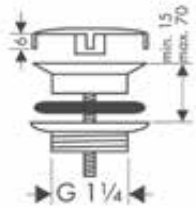

Waste set non-closing for washbasins

Chrome | 50001000 | 37.80

- non-closing valve
- for washbasins without overflow
- brass
- drain plug material stainless steel
- connection dimension G 1¼

Traps



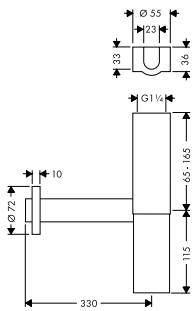

Design trap Flowstar

Chrome | 52100000 | 137.30

- adjustment distance 65 - 165 mm
- distance to wall 330 mm
- odour trap - backwater height is 70 mm
- connection dimension entry: G 1¼



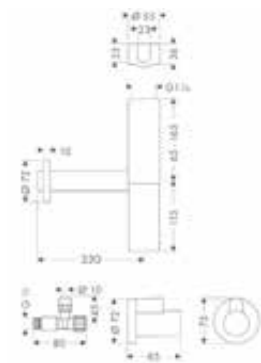

Design trap Flowstar set

Chrome | 52120000 | 196.70

- consists of: design trap, 2 angle valves, 2 covers
- adjustment distance 65 - 165 mm
- distance to wall 330 mm
- odour trap - backwater height is 70 mm
- connection dimension entry: G 1¼

Consisting of:

- Design trap Flowstar (# 52100000)
- Angle valve with cover outlet G 3/8 (# 13954000)
- Cover (# 13950000)



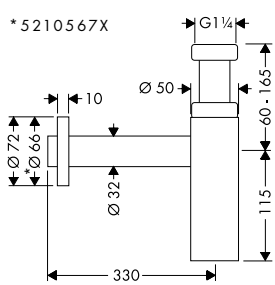

Design trap Flowstar S

Chrome	52105000	77.10
Brushed Bronze	52105140	115.60
Brushed Black	52105340	115.60
Chrome Matt Black	52105670	107.90
Matt White	52105700	107.90
Polished Gold Optic	52105990	115.60

- adjustment distance 60 - 165 mm
- distance to wall 330 mm
- odour trap - backwater height is 75 mm
- connection dimension entry: G 1¼
- connection dimension outlet DN32

Measurements within scale drawings are in mm.

Technical specifications and units of measure are subject to change.

	finish	code no.	Euro
Cover · for the facing of an angle valve	Chrome	13950000	32.70
	Brushed Bronze	13950140	49.00
	Brushed Black	13950340	49.00
	Chrome		
	Matt Black	13950670	45.70
	Matt White	13950700	45.70
	Polished Gold Optic	13950990	49.00
Angle valve with cover outlet G 3/8 · consists of: angle valve, cover · self-sealing connection thread · connection dimension entry: G ½ · connection dimension outlet G ⅜ · packaging unit: 1 piece	Chrome	13954000	52.90
	Brushed Nickel	13954820	79.40
Angle valve with microfilter outlet G 3/8 · for protection of mixers against dirt inlet, e.g. for electronic basin mixers · filter element can be removed and cleaned · connection dimension entry: G ½ · connection dimension outlet G ⅜ · packaging unit: 1 piece	Chrome	13904000	30.10
Optional parts: · Cover	Chrome	13950000	32.70
Angle valve E outlet G 3/8 · connection dimension entry: G ½ · connection dimension outlet G ⅜ · main material: brass · material handle and escutcheon: plastic · packaging unit: 1 piece	Chrome	13902000	14.00
Optional parts: · Cover	Chrome	13950000	32.70
Angle valve E outlet G 1/2 · connection dimension entry: G ½ · connection dimension outlet G ½ · main material: brass · material handle and escutcheon: plastic · packaging unit: 1 piece	Chrome	13903000	15.60

Measurements within scale drawings are in mm.

Technical specifications and units of measure are subject to change.

	finish	code no.	Euro
 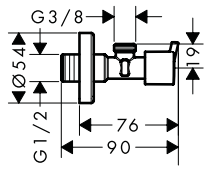 **Angle valve S outlet G 3/8** · connection dimension entry: G ½ · connection dimension outlet G ⅜ · main material: brass · material handle and escutcheon: plastic · packaging unit: 1 piece	Chrome	13901000	16.30
 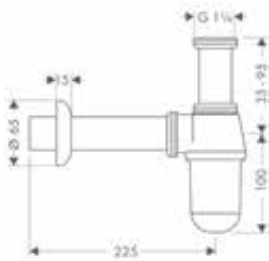 **Cup-shaped trap standard model** · adjustment distance 35 - 95 mm · distance to wall 225 mm · odour trap - backwater height is 50 mm · connection dimension entry: G 1¼	Chrome	52053000	24.70
 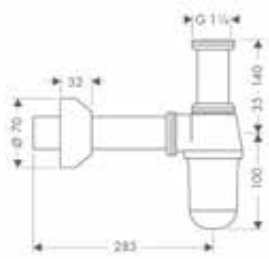 **Cup-shaped trap easy to install** · adjustment distance 35 - 140 mm · distance to wall 285 mm · odour trap - backwater height is 50 mm · connection dimension entry: G 1¼	Chrome	52010000	34.70
 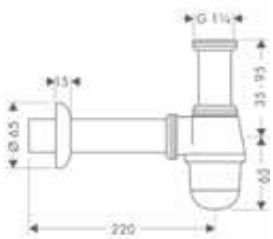 **Cup-shaped trap standard model for bidet** · adjustment distance 35 - 95 mm · distance to wall 220 mm · odour trap - backwater height is 30 mm · connection dimension entry: G 1¼	Chrome	55213000	32.80
 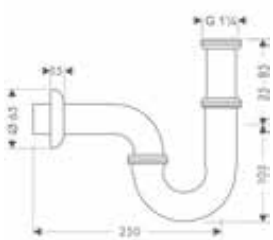 **Pipe trap standard model** · adjustment distance 35 - 85 mm · distance to wall 250 mm · odour trap - backwater height is 50 mm · connection dimension entry: G 1¼	Chrome	53002000	19.10
 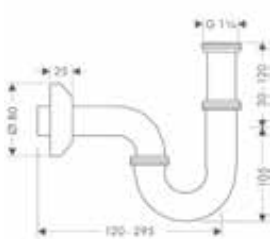 **Pipe trap easy to install** · adjustment distance 30 - 120 mm · distance to wall 300 mm · odour trap - backwater height is 50 mm · connection dimension entry: G 1¼	Chrome	53010000	25.00

Measurements within scale drawings are in mm.

Technical specifications and units of measure are subject to change.

	finish	code no.	Euro
Pipe trap standard model for bidet · adjustment distance 30 - 55 mm · distance to wall 275 mm · odour trap - backwater height is 50 mm · connection dimension entry: G 1¼	Chrome	55237000	25.40



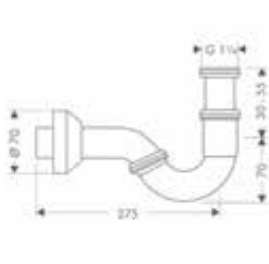

Accessories

Curved pipe 30 cm · length 300 mm · with edge · material: brass · connection dimension G 1¼	Chrome	53555000	24.20





Straight pipe 50 cm · length 500 mm · without edge · material: brass · connection dimension G 1¼	Chrome Matt Black Matt White	53493000 53493670 53493700	23.60 33.10 33.10



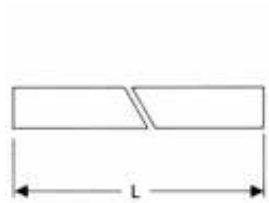

Straight pipe 30 cm · length 300 mm · with edge · material: brass · connection dimension G 1¼	Chrome Matt Black Matt White	53428000 53428670 53428700	13.30 18.70 18.70





Angle pipe 90° · without edge · material: brass · connection dimension G 1¼	Chrome	53646000	51.50



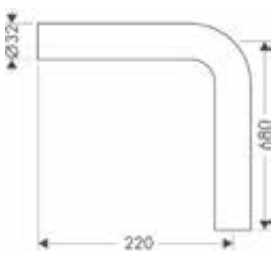

Measurements within scale drawings are in mm.

Technical specifications and units of measure are subject to change.

	finish	code no.	Euro
Extension pipe 12.5 cm · length 125 mm · material: brass · connection dimension G 1¼	Chrome	53990000	22.60





	finish	code no.	Euro
Wall flange · material: brass · connection dimension DN15 · packaging unit: 100 pieces · Price refers to 1 piece	Chrome	06010000	2.60



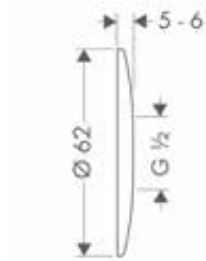

Measurements within scale drawings are in mm.

Technical specifications and units of measure are subject to change.

Kitchen mixers and sinks



Stainless-steel sinks	page 606		SilicaTec sinks	page 618	
Aqittura M91	page 630		Aquno Select M81	page 634	
Metris Select M71 / Metris M71	page 635		Talis Select M51 / Talis M51	page 645	
Talis M52	page 652		Talis M54	page 653	
Focus M41	page 658		Focus M42	page 661	
Zesis M33	page 665		Logis M31	page 668	
Logis M32	page 670		Vernis M35	page 670	
Sink combis	page 673				

hansgrohe sinks

Product ranges at a glance

	S71		**S41**
Finish	-800		-800
45 cm Sink cabinet			
50 cm Sink cabinet			
60 cm Sink cabinet			
80 cm Sink cabinet			
90 cm Sink cabinet			
without tap hole		■	■
with tap hole	■		
with tap hole and hole for pop-up waste control are pre-drilled	■		■
Without waste set	■	■	
With waste set			■
Surface-mounted installation	■	■	■
Flush-mounted installation	■	■	■
Under-mounted installation		■	
	page 606	page 612	page 615

■ Available

S51

-170, -290, -380

















■ ■

■ ■

■

■

page 618 page 621

Stainless steel built-in sinks

	finish	code no.	Euro
S711-F450 Built-in sink 450	Stainless Steel	43301800	653.90



- cut-out dimensions: 530 x 480 mm
- material: stainless steel
- number of bowls: 1 main bowl
- predrilled tap hole
- cabinet size: 60 cm
- type of installation: flat on the countertop (self-rimming) or flush-mount installation
- position overflow: on the right side of the bowl
- tap ledge reinforcing for a tight and stable seating of the kitchen mixer
- corner radius: 10 mm
- sink depth: 190 mm
- waste set not included - please order one waste set from the required parts

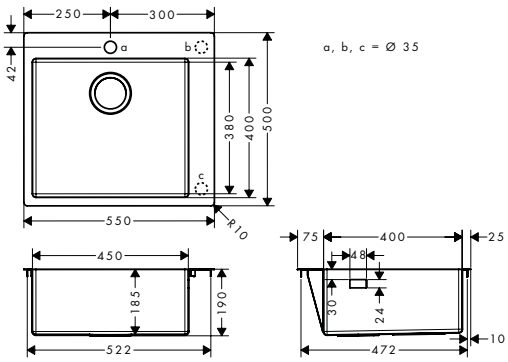

Required parts:

· D14-10 Manual waste and overflow set for single bowl	Stainless Steel	43921800	26.80

Optional parts:

· F15 Cutting board walnut		40960000	133.20
· F16 Cutting board oak		40961000	100.00
· F17 Mobile drainboard	Stainless Steel	40962800	86.70
· F14 Multifunctional strainer	Matt Black	40963000	21.70

S712-F450 Built-in sink 450	Stainless Steel	43305800	653.90



- cut-out dimensions: 530 x 480 mm
- material: stainless steel
- number of bowls: 1 main bowl
- tap hole and hole for pop-up waste control are pre-drilled
- cabinet size: 60 cm
- type of installation: flat on the countertop (self-rimming) or flush-mount installation
- position overflow: on the right side of the bowl
- tap ledge reinforcing for a tight and stable seating of the kitchen mixer
- corner radius: 10 mm
- sink depth: 190 mm
- waste set not included - please order one waste set from the required parts

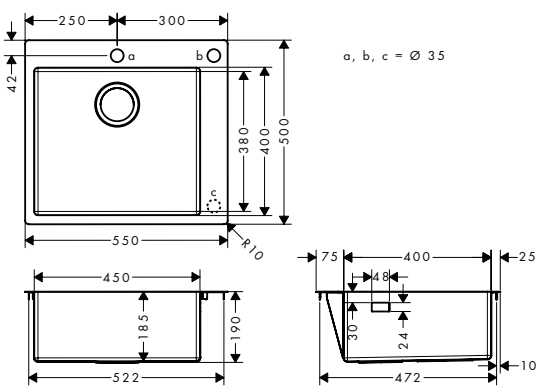

Required parts:

· D14-11 Automatic waste and overflow set for single bowl	Stainless Steel	43931800	46.90

Optional parts:

· F15 Cutting board walnut		40960000	133.20
· F16 Cutting board oak		40961000	100.00
· F17 Mobile drainboard	Stainless Steel	40962800	86.70
· F14 Multifunctional strainer	Matt Black	40963000	21.70

Measurements within scale drawings are in mm.

Technical specifications and units of measure are subject to change.

	finish	code no.	Euro



S715-F450 Built-in sink 450 with drainboard left

Stainless Steel | 43306800 | 931.30

- cut-out dimensions: 1025 x 490 mm
- material: stainless steel
- number of bowls: 1 main bowl
- with drainage
- predrilled tap hole
- orientation: bowl right
- cabinet size: 60 cm
- type of installation: flat on the countertop (self-rimming) or flush-mount installation
- position overflow: on the right side of the bowl
- tap ledge reinforcing for a tight and stable seating of the kitchen mixer
- for installation in worktops from 25 mm
- corner radius: 10 mm
- sink depth: 190 mm
- waste set not included - please order one waste set from the required parts

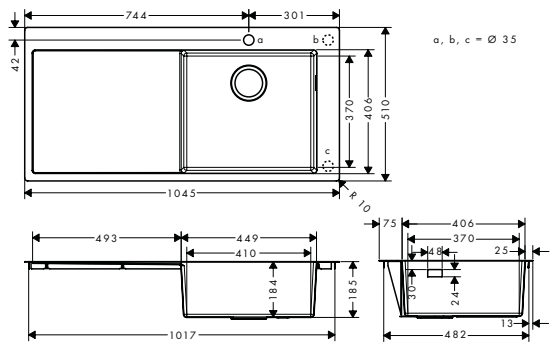

Required parts:

- D14-10 Manual waste and overflow set for single bowl — Stainless Steel | 43921800 | 26.80

Optional parts:

- F14 Multifunctional strainer — Matt Black | 40963000 | 21.70



S717-F450 Built-in sink 450 with drainboard left

Stainless Steel | 43307800 | 931.30

- cut-out dimensions: 1025 x 490 mm
- material: stainless steel
- number of bowls: 1 main bowl
- with drainage
- tap hole and hole for pop-up waste control are pre-drilled
- orientation: bowl right
- cabinet size: 60 cm
- type of installation: flat on the countertop (self-rimming) or flush-mount installation
- position overflow: on the right side of the bowl
- tap ledge reinforcing for a tight and stable seating of the kitchen mixer
- for installation in worktops from 25 mm
- corner radius: 10 mm
- sink depth: 190 mm
- waste set not included - please order one waste set from the required parts

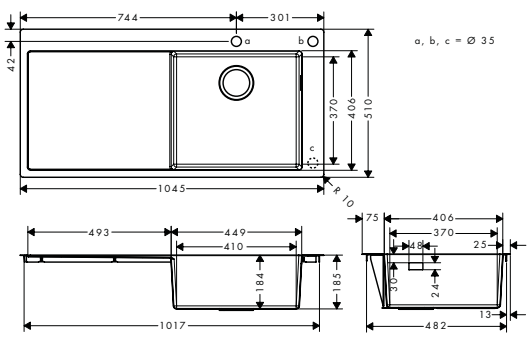

Required parts:

- D14-11 Automatic waste and overflow set for single bowl — Stainless Steel | 43931800 | 46.90

Optional parts:

- F14 Multifunctional strainer — Matt Black | 40963000 | 21.70

Measurements within scale drawings are in mm.

Technical specifications and units of measure are subject to change.

	finish	code no.	Euro
S716-F450 Built-in sink 450 with drainboard right	Stainless Steel	43331800	931.30



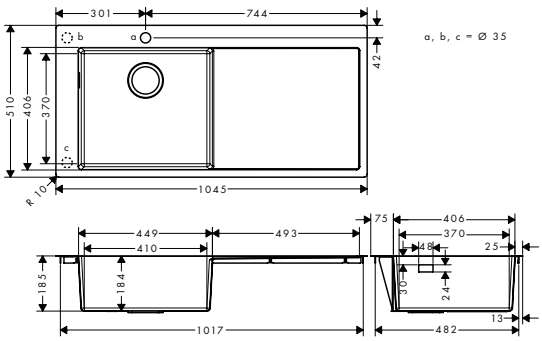

- cut-out dimensions: 1025 x 490 mm
- material: stainless steel
- number of bowls: 1 main bowl
- with drainage
- predrilled tap hole
- orientation: bowl left
- cabinet size: 60 cm
- type of installation: flat on the countertop (self-rimming) or flush-mount installation
- position overflow: on the left side of the bowl
- tap ledge reinforcing for a tight and stable seating of the kitchen mixer
- for installation in worktops from 25 mm
- corner radius: 10 mm
- sink depth: 190 mm
- waste set not included - please order one waste set from the required parts

Required parts:

· D14-10 Manual waste and overflow set for single bowl	Stainless Steel	43921800	26.80

Optional parts:

· F14 Multifunctional strainer	Matt Black	40963000	21.70

S718-F450 Built-in sink 450 with drainboard right	Stainless Steel	43332800	931.30



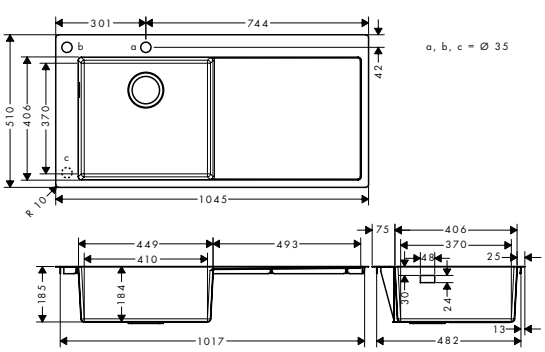

- cut-out dimensions: 1025 x 490 mm
- material: stainless steel
- number of bowls: 1 main bowl
- with drainage
- tap hole and hole for pop-up waste control are pre-drilled
- orientation: bowl left
- cabinet size: 60 cm
- type of installation: flat on the countertop (self-rimming) or flush-mount installation
- position overflow: on the left side of the bowl
- tap ledge reinforcing for a tight and stable seating of the kitchen mixer
- for installation in worktops from 25 mm
- corner radius: 10 mm
- sink depth: 190 mm
- waste set not included - please order one waste set from the required parts

Required parts:

· D14-11 Automatic waste and overflow set for single bowl	Stainless Steel	43931800	46.90

Optional parts:

· F14 Multifunctional strainer	Matt Black	40963000	21.70

Measurements within scale drawings are in mm.

Technical specifications and units of measure are subject to change.

	finish	code no.	Euro



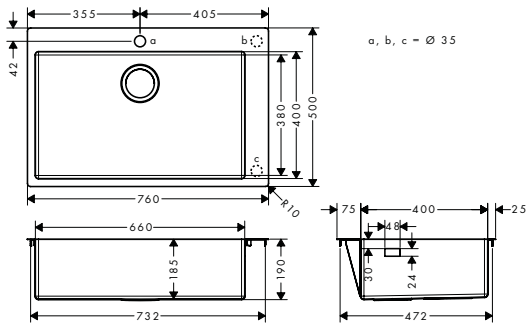

S711-F660 Built-in sink 660

	finish	code no.	Euro
	Stainless Steel	43302800	710.30

- cut-out dimensions: 740 x 480 mm
- material: stainless steel
- number of bowls: 1 main bowl
- predrilled tap hole
- cabinet size: 80 cm
- type of installation: flat on the countertop (self-rimming) or flush-mount installation
- position overflow: on the right side of the bowl
- tap ledge reinforcing for a tight and stable seating of the kitchen mixer
- corner radius: 10 mm
- sink depth: 190 mm
- waste set not included - please order one waste set from the required parts

Required parts:

· D14-10 Manual waste and overflow set for single bowl	Stainless Steel	43921800	26.80

Optional parts:

· F15 Cutting board walnut		40960000	133.20
· F16 Cutting board oak		40961000	100.00
· F17 Mobile drainboard	Stainless Steel	40962800	86.70
· F14 Multifunctional strainer	Matt Black	40963000	21.70



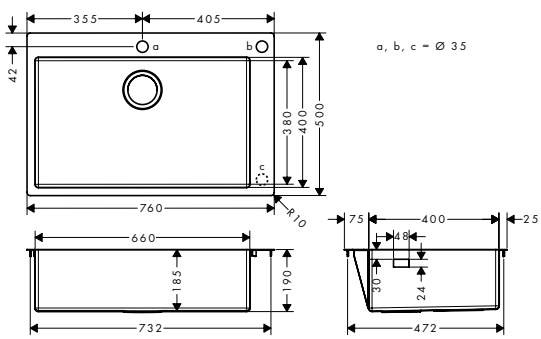

S712-F660 Built-in sink 660

	finish	code no.	Euro
	Stainless Steel	43308800	710.30

- cut-out dimensions: 740 x 480 mm
- material: stainless steel
- number of bowls: 1 main bowl
- tap hole and hole for pop-up waste control are pre-drilled
- cabinet size: 80 cm
- type of installation: flat on the countertop (self-rimming) or flush-mount installation
- position overflow: on the right side of the bowl
- tap ledge reinforcing for a tight and stable seating of the kitchen mixer
- corner radius: 10 mm
- sink depth: 190 mm
- waste set not included - please order one waste set from the required parts

Required parts:

· D14-11 Automatic waste and overflow set for single bowl	Stainless Steel	43931800	46.90

Optional parts:

· F15 Cutting board walnut		40960000	133.20
· F16 Cutting board oak		40961000	100.00
· F17 Mobile drainboard	Stainless Steel	40962800	86.70
· F14 Multifunctional strainer	Matt Black	40963000	21.70

Measurements within scale drawings are in mm.

Technical specifications and units of measure are subject to change.

	finish	code no.	Euro



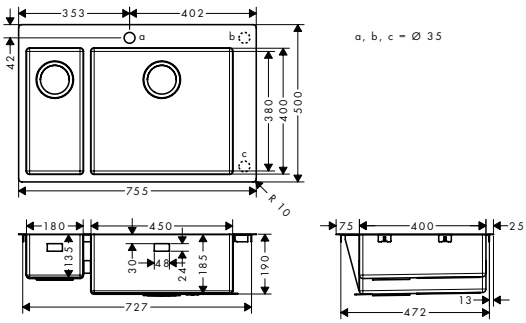

S711-F655 Built-in sink 180/450

Stainless Steel | 43309800 | 1,104.80

- cut-out dimensions: 735 x 480 mm
- material: stainless steel
- number of bowls: 1 main bowl and 1 additional bowl
- predrilled tap hole
- cabinet size: 80 cm
- type of installation: flat on the countertop (self-rimming) or flush-mount installation
- position overflow: on the right side of the main bowl
- tap ledge reinforcing for a tight and stable seating of the kitchen mixer
- corner radius: 10 mm
- sink depth: 190 mm
- depth half sink: 135 mm
- waste set not included - please order one waste set from the required parts

Required parts:

· D15-10 Manual waste and overflow set for double bowl	Stainless Steel	43922800	44.60

Optional parts:

· F15 Cutting board walnut		40960000	133.20
· F16 Cutting board oak		40961000	100.00
· F17 Mobile drainboard	Stainless Steel	40962800	86.70
· F14 Multifunctional strainer	Matt Black	40963000	21.70



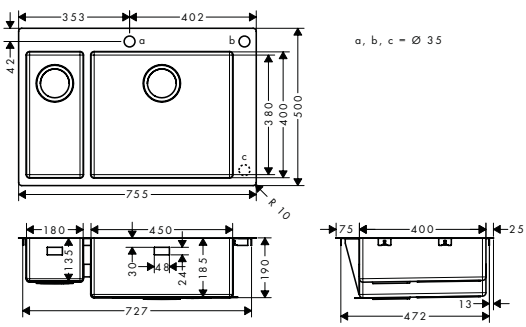

S712-F655 Built-in sink 180/450

Stainless Steel | 43310800 | 1,104.80

- cut-out dimensions: 735 x 480 mm
- material: stainless steel
- number of bowls: 1 main bowl and 1 additional bowl
- tap hole and hole for pop-up waste control are pre-drilled
- cabinet size: 80 cm
- type of installation: flat on the countertop (self-rimming) or flush-mount installation
- position overflow: on the right side of the main bowl
- tap ledge reinforcing for a tight and stable seating of the kitchen mixer
- corner radius: 10 mm
- sink depth: 190 mm
- depth half sink: 135 mm
- waste set not included - please order one waste set from the required parts

Required parts:

· D15-11 Automatic waste and overflow set for double bowl	Stainless Steel	43932800	72.60

Optional parts:

· F15 Cutting board walnut		40960000	133.20
· F16 Cutting board oak		40961000	100.00
· F17 Mobile drainboard	Stainless Steel	40962800	86.70
· F14 Multifunctional strainer	Matt Black	40963000	21.70

Measurements within scale drawings are in mm.

Technical specifications and units of measure are subject to change.

	finish	code no.	Euro
S711-F765 Built-in sink 370/370	Stainless Steel	43303800	1,217.60



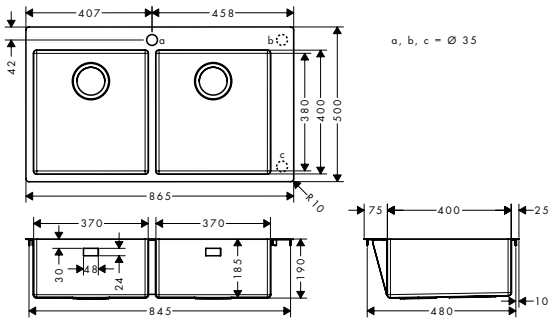

- cut-out dimensions: 845 x 480 mm
- material: stainless steel
- number of bowls: 2 main bowls
- predrilled tap hole
- cabinet size: 90 cm
- type of installation: flat on the countertop (self-rimming) or flush-mount installation
- tap ledge reinforcing for a tight and stable seating of the kitchen mixer
- corner radius: 10 mm
- sink depth: 190 mm
- waste set not included - please order one waste set from the required parts

Required parts:

· D15-10 Manual waste and overflow set for double bowl	Stainless Steel	43922800	44.60

Optional parts:

· F15 Cutting board walnut		40960000	133.20
· F16 Cutting board oak		40961000	100.00
· F17 Mobile drainboard	Stainless Steel	40962800	86.70
· F14 Multifunctional strainer	Matt Black	40963000	21.70

S712-F765 Built-in sink 370/370	Stainless Steel	43311800	1,217.60



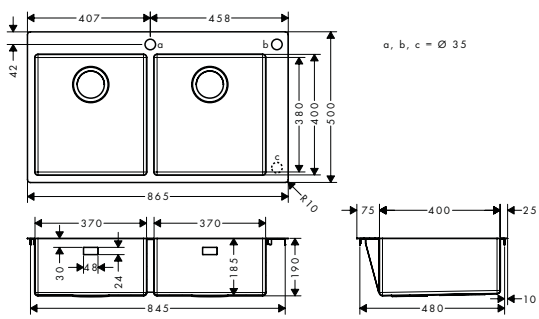

- cut-out dimensions: 845 x 480 mm
- material: stainless steel
- number of bowls: 2 main bowls
- tap hole and hole for pop-up waste control are pre-drilled
- cabinet size: 90 cm
- type of installation: flat on the countertop (self-rimming) or flush-mount installation
- tap ledge reinforcing for a tight and stable seating of the kitchen mixer
- corner radius: 10 mm
- sink depth: 190 mm
- waste set not included - please order one waste set from the required parts

Required parts:

· D15-11 Automatic waste and overflow set for double bowl	Stainless Steel	43932800	72.60

Optional parts:

· F15 Cutting board walnut		40960000	133.20
· F16 Cutting board oak		40961000	100.00
· F17 Mobile drainboard	Stainless Steel	40962800	86.70
· F14 Multifunctional strainer	Matt Black	40963000	21.70

Measurements within scale drawings are in mm.

Technical specifications and units of measure are subject to change.

Stainless steel undermount sinks

	finish	code no.	Euro
S719-U400 Under-mount sink 400	Stainless Steel	43425800	451.00



- cut-out dimensions: 398 x 398 mm
- material: stainless steel
- number of bowls: 1 main bowl
- cabinet size: 50 cm
- type of installation: undermount, flat on the countertop (self-rimming) or flush-mount installation
- position overflow: on the right side of the bowl
- corner radius: 10 mm
- sink depth: 190 mm
- waste set not included - please order one waste set from the required parts

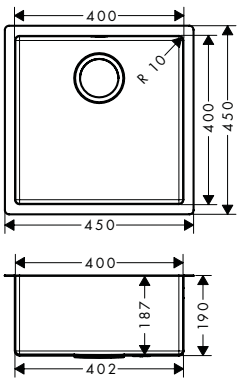

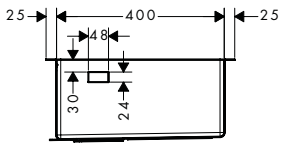

Required parts (choose one)

· D14-10 Manual waste and overflow set for single bowl	Stainless Steel	43921800	26.80
· D14-11 Automatic waste and overflow set for single bowl	Stainless Steel	43931800	46.90

Optional parts:

· F15 Cutting board walnut		40960000	133.20
· F16 Cutting board oak		40961000	100.00
· F17 Mobile drainboard	Stainless Steel	40962800	86.70
· F14 Multifunctional strainer	Matt Black	40963000	21.70

S719-U450 Under-mount sink 450	Stainless Steel	43426800	484.80



- cut-out dimensions: 448 x 398 mm
- material: stainless steel
- number of bowls: 1 main bowl
- cabinet size: 60 cm
- type of installation: undermount, flat on the countertop (self-rimming) or flush-mount installation
- position overflow: on the right side of the bowl
- corner radius: 10 mm
- sink depth: 190 mm
- waste set not included - please order one waste set from the required parts

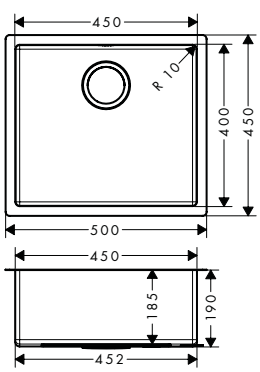

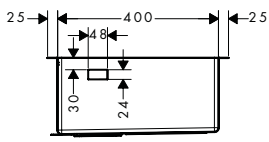

Required parts (choose one)

· D14-10 Manual waste and overflow set for single bowl	Stainless Steel	43921800	26.80
· D14-11 Automatic waste and overflow set for single bowl	Stainless Steel	43931800	46.90

Optional parts:

· F15 Cutting board walnut		40960000	133.20
· F16 Cutting board oak		40961000	100.00
· F17 Mobile drainboard	Stainless Steel	40962800	86.70
· F14 Multifunctional strainer	Matt Black	40963000	21.70

Measurements within scale drawings are in mm.

Technical specifications and units of measure are subject to change.

	finish	code no.	Euro
S719-U500 Under-mount sink 500	Stainless Steel	43427800	507.40



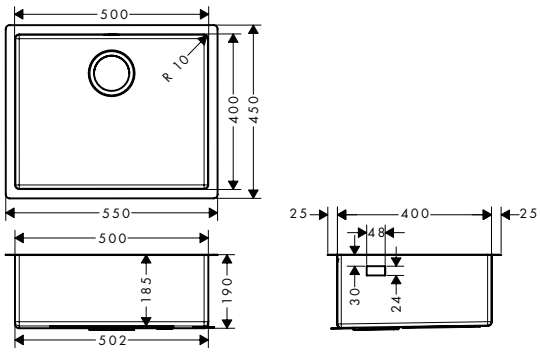

- cut-out dimensions: 498 x 398 mm
- material: stainless steel
- number of bowls: 1 main bowl
- cabinet size: 60 cm
- type of installation: undermount, flat on the countertop (self-rimming) or flush-mount installation
- position overflow: on the right side of the bowl
- corner radius: 10 mm
- sink depth: 190 mm
- waste set not included - please order one waste set from the required parts

Required parts (choose one)

· D14-10 Manual waste and overflow set for single bowl	Stainless Steel	43921800	26.80
· D14-11 Automatic waste and overflow set for single bowl	Stainless Steel	43931800	46.90

Optional parts:

· F15 Cutting board walnut		40960000	133.20
· F16 Cutting board oak		40961000	100.00
· F17 Mobile drainboard	Stainless Steel	40962800	86.70
· F14 Multifunctional strainer	Matt Black	40963000	21.70

S719-U660 Under-mount sink 660	Stainless Steel	43428800	529.90



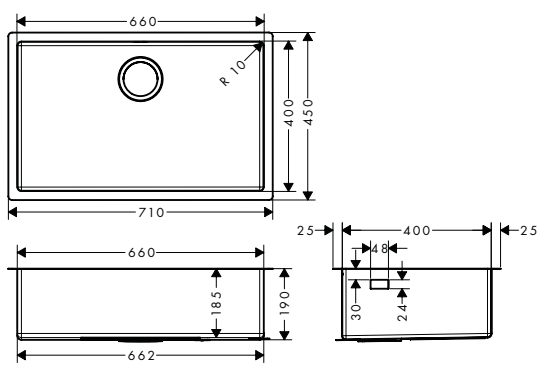

- cut-out dimensions: 658 x 398 mm
- material: stainless steel
- number of bowls: 1 main bowl
- cabinet size: 80 cm
- type of installation: undermount, flat on the countertop (self-rimming) or flush-mount installation
- position overflow: on the right side of the bowl
- corner radius: 10 mm
- sink depth: 190 mm
- waste set not included - please order one waste set from the required parts

Required parts (choose one)

· D14-10 Manual waste and overflow set for single bowl	Stainless Steel	43921800	26.80
· D14-11 Automatic waste and overflow set for single bowl	Stainless Steel	43931800	46.90

Optional parts:

· F15 Cutting board walnut		40960000	133.20
· F16 Cutting board oak		40961000	100.00
· F17 Mobile drainboard	Stainless Steel	40962800	86.70
· F14 Multifunctional strainer	Matt Black	40963000	21.70

Measurements within scale drawings are in mm.

Technical specifications and units of measure are subject to change.

	finish	code no.	Euro
S719-U655 Under-mount sink 180/450	Stainless Steel	43429800	890.60



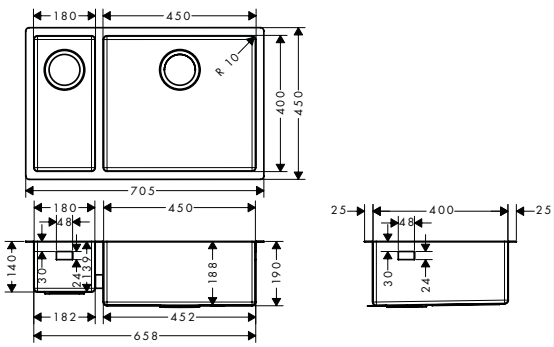

- cut-out dimensions: 653 x 398 mm
- material: stainless steel
- number of bowls: 1 main bowl and 1 additional bowl
- cabinet size: 80 cm
- type of installation: undermount, flat on the countertop (self-rimming) or flush-mount installation
- position overflow: on the right side of the main bowl
- corner radius: 10 mm
- sink depth: 190 mm
- depth half sink: 135 mm
- waste set not included - please order one waste set from the required parts

Required parts (choose one)

· D15-10 Manual waste and overflow set for double bowl	Stainless Steel	43922800	44.60
· D15-11 Automatic waste and overflow set for double bowl	Stainless Steel	43932800	72.60

Optional parts:

· F15 Cutting board walnut		40960000	133.20
· F16 Cutting board oak		40961000	100.00
· F17 Mobile drainboard	Stainless Steel	40962800	86.70
· F14 Multifunctional strainer	Matt Black	40963000	21.70

S719-U765 Under-mount sink 370/370	Stainless Steel	43430800	969.50



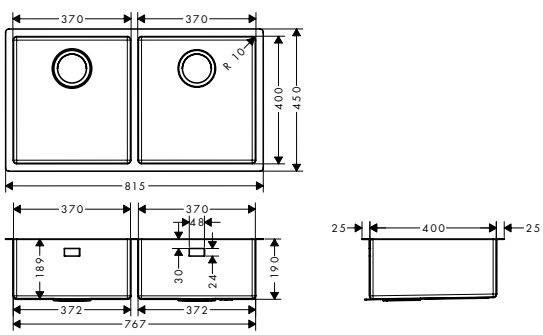

- cut-out dimensions: 763 x 398 mm
- material: stainless steel
- number of bowls: 2 main bowls
- cabinet size: 90 cm
- type of installation: undermount, flat on the countertop (self-rimming) or flush-mount installation
- corner radius: 10 mm
- sink depth: 190 mm
- waste set not included - please order one waste set from the required parts

Required parts (choose one)

· D15-10 Manual waste and overflow set for double bowl	Stainless Steel	43922800	44.60
· D15-11 Automatic waste and overflow set for double bowl	Stainless Steel	43932800	72.60

Optional parts:

· F15 Cutting board walnut		40960000	133.20
· F16 Cutting board oak		40961000	100.00
· F14 Multifunctional strainer	Matt Black	40963000	21.70
· F17 Mobile drainboard	Stainless Steel	40962800	86.70

Measurements within scale drawings are in mm.

Technical specifications and units of measure are subject to change.

S41 stainless steel built-in sinks

	finish	code no.	Euro



S4111-F340 Built-in sink 340/400 with drainboard

Stainless Steel | 43340800 | 342.40

- consists of: built-in sink, manual waste set with siphon
- cut-out dimensions: 895 x 485 mm
- material: stainless steel
- number of bowls: 1 main bowl
- with drainage
- tap hole for drilling is predefined (see scale drawing), without tap hole
- orientation: reversible
- cabinet size: 45 cm
- type of installation: flat on the countertop (self-rimming) or flush-mount installation
- position overflow: on the side of the bowl under drainboard
- tap ledge reinforcing for a tight and stable seating of the kitchen mixer
- corner radius: 70 mm
- sink depth: 210 mm

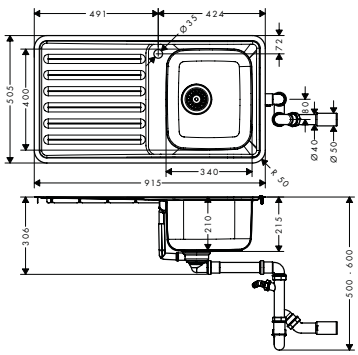



S4113-F340 Built-in sink 340/400 with drainboard

Stainless Steel | 43337800 | 363.80

- consists of: built-in sink, automatic waste set with siphon
- cut-out dimensions: 895 x 485 mm
- material: stainless steel
- number of bowls: 1 main bowl
- with drainage
- tap hole and hole for pop-up waste control are pre-drilled
- orientation: reversible
- cabinet size: 45 cm
- type of installation: flat on the countertop (self-rimming) or flush-mount installation
- position overflow: on the side of the bowl under drainboard
- tap ledge reinforcing for a tight and stable seating of the kitchen mixer
- corner radius: 70 mm
- sink depth: 210 mm

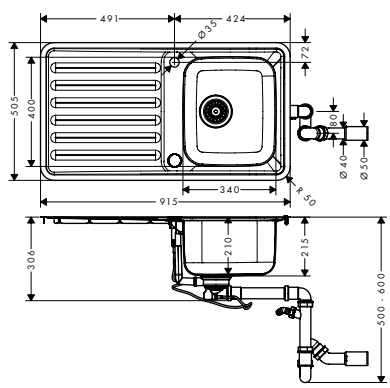



S4111-F400 Built-in sink 400/400 with drainboard

Stainless Steel | 43341800 | 363.80

- consists of: built-in sink, manual waste set with siphon
- cut-out dimensions: 955 x 485 mm
- material: stainless steel
- number of bowls: 1 main bowl
- with drainage
- tap hole for drilling is predefined (see scale drawing), without tap hole
- orientation: reversible
- cabinet size: 50 cm
- type of installation: flat on the countertop (self-rimming) or flush-mount installation
- position overflow: on the side of the bowl under drainboard
- tap ledge reinforcing for a tight and stable seating of the kitchen mixer
- corner radius: 70 mm
- sink depth: 210 mm

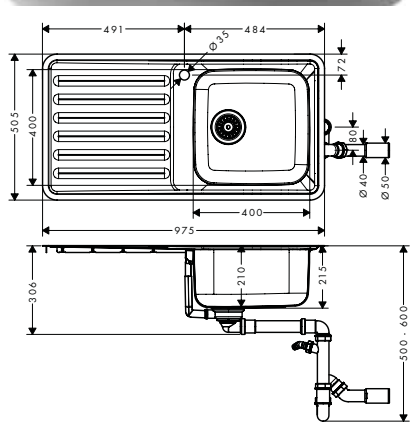

Measurements within scale drawings are in mm.

Technical specifications and units of measure are subject to change.

	finish	code no.	Euro
 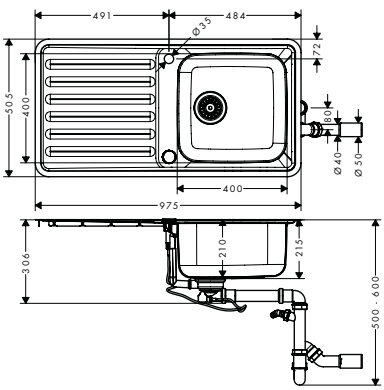	Stainless Steel	43338800	385.20

S4113-F400 Built-in sink 400/400 with drainboard

- consists of: built-in sink, automatic waste set with siphon
- cut-out dimensions: 955 x 485 mm
- material: stainless steel
- number of bowls: 1 main bowl
- with drainage
- tap hole and hole for pop-up waste control are pre-drilled
- orientation: reversible
- cabinet size: 50 cm
- type of installation: flat on the countertop (self-rimming) or flush-mount installation
- position overflow: on the side of the bowl under drainboard
- tap ledge reinforcing for a tight and stable seating of the kitchen mixer
- corner radius: 70 mm
- sink depth: 210 mm

	finish	code no.	Euro
 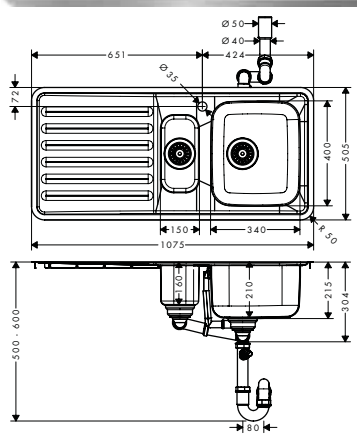	Stainless Steel	43342800	417.30

S4111-F540 Built-in sink 340/150/400 with drainboard

- consists of: built-in sink, manual waste set with siphon
- cut-out dimensions: 1055 x 485 mm
- material: stainless steel
- number of bowls: 1 main bowl and 1 additional bowl
- with drainage
- tap hole for drilling is predefined (see scale drawing), without tap hole
- orientation: reversible
- cabinet size: 60 cm
- type of installation: flat on the countertop (self-rimming) or flush-mount installation
- position overflow: on the side of the bowl under drainboard
- tap ledge reinforcing for a tight and stable seating of the kitchen mixer
- corner radius: 70 mm
- sink depth: 210 mm
- depth half sink: 160 mm

	finish	code no.	Euro
 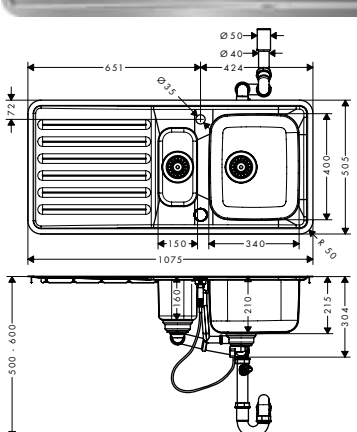	Stainless Steel	43339800	438.70

S4113-F540 Built-in sink 340/150/400 with drainboard

- consists of: built-in sink, automatic waste set with siphon
- cut-out dimensions: 1055 x 485 mm
- material: stainless steel
- number of bowls: 1 main bowl and 1 additional bowl
- with drainage
- tap hole and hole for pop-up waste control are pre-drilled
- orientation: reversible
- cabinet size: 60 cm
- type of installation: flat on the countertop (self-rimming) or flush-mount installation
- position overflow: on the side of the bowl under drainboard
- tap ledge reinforcing for a tight and stable seating of the kitchen mixer
- corner radius: 70 mm
- sink depth: 210 mm
- depth half sink: 160 mm

Measurements within scale drawings are in mm.

Technical specifications and units of measure are subject to change.

	finish	code no.	Euro
 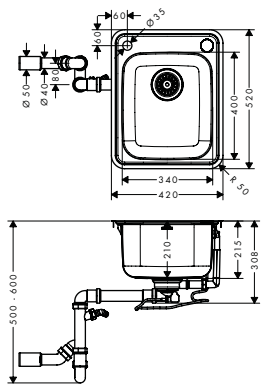	Stainless Steel	43334800	256.80

S412-F340 Built-in sink 340/400

- consists of: built-in sink, automatic waste set with siphon
- cut-out dimensions: 410 x 510 mm
- material: stainless steel
- number of bowls: 1 main bowl
- tap hole and hole for pop-up waste control are pre-drilled
- cabinet size: 45 cm
- type of installation: flat on the countertop (self-rimming) or flush-mount installation
- position overflow: on the side of the bowl
- tap ledge reinforcing for a tight and stable seating of the kitchen mixer
- corner radius: 70 mm
- sink depth: 210 mm

	finish	code no.	Euro
 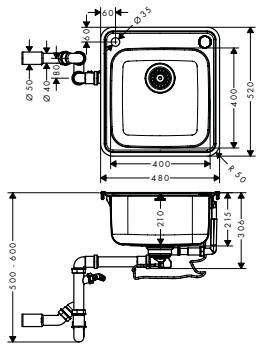	Stainless Steel	43335800	267.50

S412-F400 Built-in sink 400/400

- consists of: built-in sink, automatic waste set with siphon
- cut-out dimensions: 470 x 510 mm
- material: stainless steel
- number of bowls: 1 main bowl
- tap hole and hole for pop-up waste control are pre-drilled
- cabinet size: 50 cm
- type of installation: flat on the countertop (self-rimming) or flush-mount installation
- position overflow: on the side of the bowl
- tap ledge reinforcing for a tight and stable seating of the kitchen mixer
- corner radius: 70 mm
- sink depth: 210 mm

	finish	code no.	Euro
 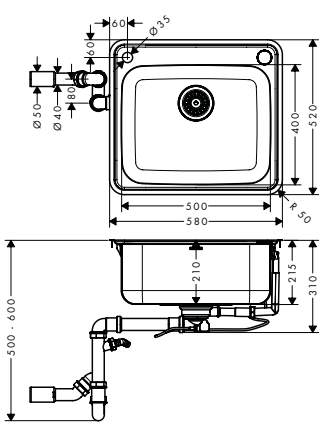	Stainless Steel	43336800	278.20

S412-F500 Built-in sink 500/400

- consists of: built-in sink, automatic waste set with siphon
- cut-out dimensions: 570 x 510 mm
- material: stainless steel
- number of bowls: 1 main bowl
- tap hole and hole for pop-up waste control are pre-drilled
- cabinet size: 60 cm
- type of installation: flat on the countertop (self-rimming) or flush-mount installation
- position overflow: on the side of the bowl
- tap ledge reinforcing for a tight and stable seating of the kitchen mixer
- corner radius: 70 mm
- sink depth: 210 mm

Measurements within scale drawings are in mm.

SilicaTec built-in sinks

	finish	code no.	Euro
S510-F450 Built-in sink 450	Graphiteblack	43312170	303.20
	Stonegrey	43312290	303.20
	Concretegrey	43312380	303.20



- cut-out dimensions: 540 x 490 mm
- material: SilicaTec
- number of bowls: 1 main bowl
- tap hole for drilling is predefined (see scale drawing), diamond drill included
- cabinet size: 60 cm
- type of installation: topmount
- position overflow: on the right side of the bowl
- sink depth: 190 mm
- waste set not included - please order one waste set from the required parts

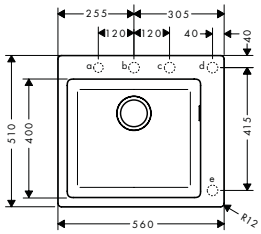

a, b, c, d, e = Ø 35

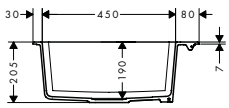

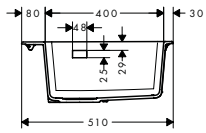

Required parts (choose one)

· D16-10 Manual waste and overflow set for single bowl granite	Chrome	43927000	26.70
· D16-11 Automatic waste and overflow set for single bowl granite	Chrome	43937000	46.70

Optional parts:

· F15 Cutting board walnut		40960000	133.20
· F16 Cutting board oak		40961000	100.00
· F17 Mobile drainboard	Stainless Steel	40962800	86.70
· F14 Multifunctional strainer	Matt Black	40963000	21.70

S514-F450 Built-in sink 450 with drainboard left	Graphiteblack	43314170	470.90
	Stonegrey	43314290	470.90
	Concretegrey	43314380	470.90



- cut-out dimensions: 1030 x 490 mm
- material: SilicaTec
- number of bowls: 1 main bowl
- with drainage
- tap hole for drilling is predefined (see scale drawing), diamond drill included
- orientation: bowl right
- cabinet size: 60 cm
- type of installation: topmount
- position overflow: on the right side of the bowl
- for installation in worktops from 20 mm
- sink depth: 190 mm
- waste set not included - please order one waste set from the required parts

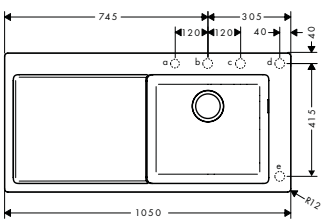

a, b, c, d, e = Ø 35

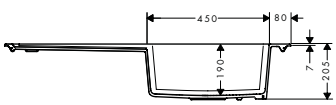

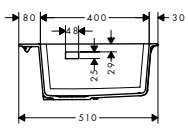

Required parts (choose one)

· D16-10 Manual waste and overflow set for single bowl granite	Chrome	43927000	26.70
· D16-11 Automatic waste and overflow set for single bowl granite	Chrome	43937000	46.70

Optional parts:

· F15 Cutting board walnut		40960000	133.20
· F16 Cutting board oak		40961000	100.00
· F14 Multifunctional strainer	Matt Black	40963000	21.70

Measurements within scale drawings are in mm.

Technical specifications and units of measure are subject to change.



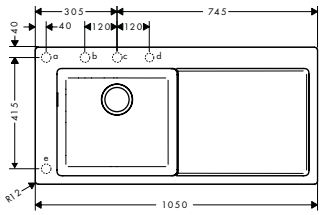

a, b, c, d, e = Ø 35

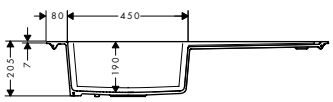

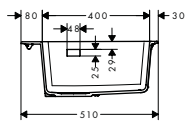

S5110-F450 Built-in sink 450 with drainboard right

finish	code no.	Euro
Graphiteblack	43330170	470.90
Stonegrey	43330290	470.90
Concretegrey	43330380	470.90

- cut-out dimensions: 1030 x 490 mm
- material: SilicaTec
- number of bowls: 1 main bowl
- with drainage
- tap hole for drilling is predefined (see scale drawing), diamond drill included
- orientation: bowl left
- cabinet size: 60 cm
- type of installation: topmount
- position overflow: on the left side of the bowl
- for installation in worktops from 20 mm
- sink depth: 190 mm
- waste set not included - please order one waste set from the required parts

Required parts (choose one)

· D16-10 Manual waste and overflow set for single bowl granite	Chrome	43927000	26.70
· D16-11 Automatic waste and overflow set for single bowl granite	Chrome	43937000	46.70

Optional parts:

· F15 Cutting board walnut		40960000	133.20
· F16 Cutting board oak		40961000	100.00
· F14 Multifunctional strainer	Matt Black	40963000	21.70



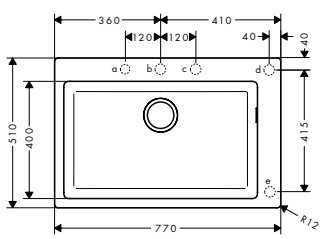

a, b, c, d, e = Ø 35

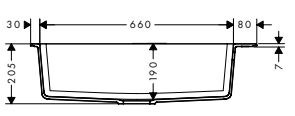

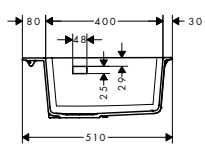

S510-F660 Built-in sink 660

finish	code no.	Euro
Graphiteblack	43313170	387.00
Stonegrey	43313290	387.00
Concretegrey	43313380	387.00

- cut-out dimensions: 750 x 490 mm
- material: SilicaTec
- number of bowls: 1 main bowl
- tap hole for drilling is predefined (see scale drawing), diamond drill included
- cabinet size: 80 cm
- type of installation: topmount
- position overflow: on the right side of the bowl
- sink depth: 190 mm
- waste set not included - please order one waste set from the required parts

Required parts (choose one)

· D16-10 Manual waste and overflow set for single bowl granite	Chrome	43927000	26.70
· D16-11 Automatic waste and overflow set for single bowl granite	Chrome	43937000	46.70

Optional parts:

· F15 Cutting board walnut		40960000	133.20
· F16 Cutting board oak		40961000	100.00
· F17 Mobile drainboard	Stainless Steel	40962800	86.70
· F14 Multifunctional strainer	Matt Black	40963000	21.70

Measurements within scale drawings are in mm.

	finish	code no.	Euro

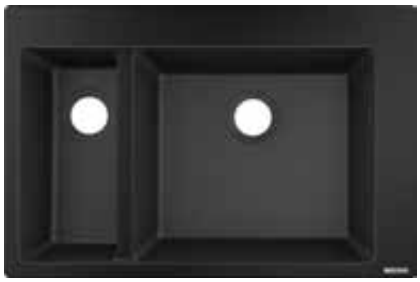

S510-F635 Built-in sink 180/450

Graphiteblack	43315170	387.00
Stonegrey	43315290	387.00
Concretegrey	43315380	387.00

- cut-out dimensions: 750 x 490 mm
- material: SilicaTec
- number of bowls: 1 main bowl and 1 additional bowl
- tap hole for drilling is predefined (see scale drawing), diamond drill included
- cabinet size: 80 cm
- type of installation: topmount
- position overflow: on the right side of the main bowl
- sink depth: 190 mm
- depth half sink: 140 mm
- waste set not included - please order one waste set from the required parts

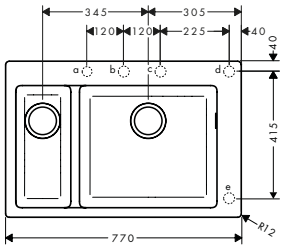

a, b, c, d, e = Ø 35

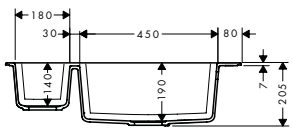

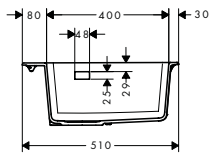

Required parts (choose one)

· D17-10 Manual waste and overflow set for double bowl granite	Chrome	43928000	44.40
· D17-11 Automatic waste and overflow set for double bowl granite	Chrome	43938000	72.30

Optional parts:

· F15 Cutting board walnut		40960000	133.20
· F16 Cutting board oak		40961000	100.00
· F17 Mobile drainboard	Stainless Steel	40962800	86.70
· F14 Multifunctional strainer	Matt Black	40963000	21.70



S510-F770 Built-in sink 370/370

Graphiteblack	43316170	451.60
Stonegrey	43316290	451.60
Concretegrey	43316380	451.60

- cut-out dimensions: 860 x 490 mm
- material: SilicaTec
- number of bowls: 2 main bowls
- tap hole for drilling is predefined (see scale drawing), diamond drill included
- cabinet size: 90 cm
- type of installation: topmount
- position overflow: on the right side of the bowl
- sink depth: 190 mm
- waste set not included - please order one waste set from the required parts

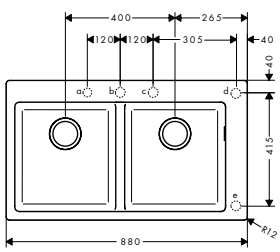

a, b, c, d, e = Ø 35

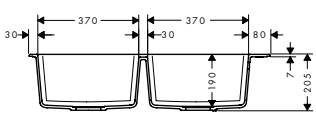

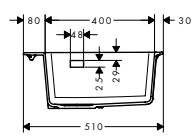

Required parts (choose one)

· D17-10 Manual waste and overflow set for double bowl granite	Chrome	43928000	44.40
· D17-11 Automatic waste and overflow set for double bowl granite	Chrome	43938000	72.30

Optional parts:

· F15 Cutting board walnut		40960000	133.20
· F16 Cutting board oak		40961000	100.00
· F17 Mobile drainboard	Stainless Steel	40962800	86.70
· F14 Multifunctional strainer	Matt Black	40963000	21.70

Measurements within scale drawings are in mm.

Technical specifications and units of measure are subject to change.

SilicaTec undermount sinks

	finish	code no.	Euro
S510-U450 Under-mount sink 450	Graphiteblack	43431170	373.10
	Stonegrey	43431290	373.10
	Concretegrey	43431380	373.10



- cut-out dimensions: 448 x 398 mm
- material: SilicaTec
- number of bowls: 1 main bowl
- cabinet size: 60 cm
- type of installation: undermount
- position overflow: on the right side of the bowl
- sink depth: 190 mm
- waste set not included - please order one waste set from the required parts

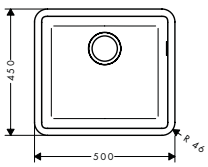

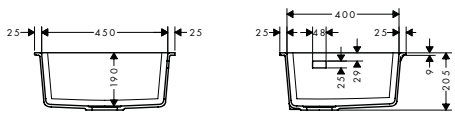

Required parts (choose one)

· D16-10 Manual waste and overflow set for single bowl granite	Chrome	43927000	26.70
· D16-11 Automatic waste and overflow set for single bowl granite	Chrome	43937000	46.70

Optional parts:

· F15 Cutting board walnut		40960000	133.20
· F16 Cutting board oak		40961000	100.00
· F17 Mobile drainboard	Stainless Steel	40962800	86.70
· F14 Multifunctional strainer	Matt Black	40963000	21.70

S510-U660 Under-mount sink 660	Graphiteblack	43432170	457.00
	Stonegrey	43432290	457.00
	Concretegrey	43432380	457.00



- cut-out dimensions: 658 x 398 mm
- material: SilicaTec
- number of bowls: 1 main bowl
- cabinet size: 80 cm
- type of installation: undermount
- position overflow: on the right side of the bowl
- sink depth: 190 mm
- waste set not included - please order one waste set from the required parts

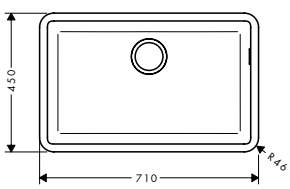

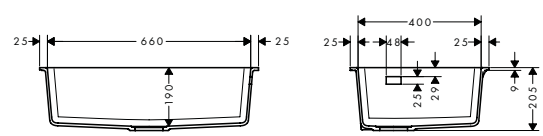

Required parts (choose one)

· D16-10 Manual waste and overflow set for single bowl granite	Chrome	43927000	26.70
· D16-11 Automatic waste and overflow set for single bowl granite	Chrome	43937000	46.70

Optional parts:

· F15 Cutting board walnut		40960000	133.20
· F16 Cutting board oak		40961000	100.00
· F17 Mobile drainboard	Stainless Steel	40962800	86.70
· F14 Multifunctional strainer	Matt Black	40963000	21.70

Measurements within scale drawings are in mm.

Technical specifications and units of measure are subject to change.

	finish	code no.	Euro

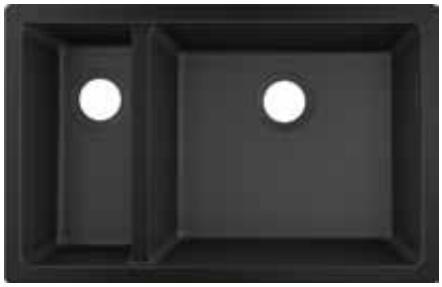

S510-U635 Under-mount sink 180/450

Graphiteblack	43433170	457.00
Stonegrey	43433290	457.00
Concretegrey	43433380	457.00

- cut-out dimensions: 658 x 398 mm
- material: SilicaTec
- number of bowls: 1 main bowl and 1 additional bowl
- cabinet size: 80 cm
- type of installation: undermount
- position overflow: on the right side of the main bowl
- sink depth: 190 mm
- depth half sink: 140 mm
- waste set not included - please order one waste set from the required parts

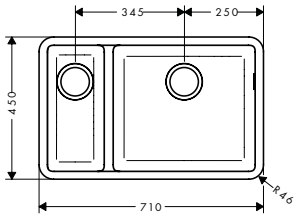

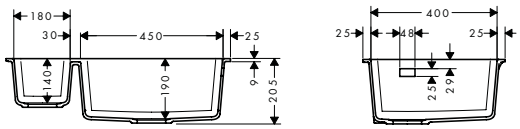

Required parts (choose one)

· D17-10 Manual waste and overflow set for double bowl granite	Chrome	43928000	44.40
· D17-11 Automatic waste and overflow set for double bowl granite	Chrome	43938000	72.30

Optional parts:

· F15 Cutting board walnut		40960000	133.20
· F16 Cutting board oak		40961000	100.00
· F17 Mobile drainboard	Stainless Steel	40962800	86.70
· F14 Multifunctional strainer	Matt Black	40963000	21.70



S510-U770 Under-mount sink 370/370

Graphiteblack	43434170	521.40
Stonegrey	43434290	521.40
Concretegrey	43434380	521.40

- cut-out dimensions: 768 x 398 mm
- material: SilicaTec
- number of bowls: 2 main bowls
- cabinet size: 90 cm
- type of installation: undermount
- position overflow: on the right side of the bowl
- sink depth: 190 mm
- waste set not included - please order one waste set from the required parts

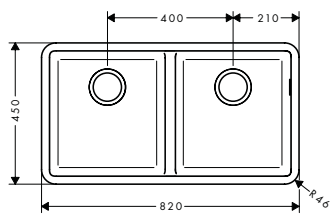

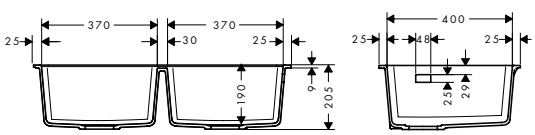

Required parts (choose one)

· D17-10 Manual waste and overflow set for double bowl granite	Chrome	43928000	44.40
· D17-11 Automatic waste and overflow set for double bowl granite	Chrome	43938000	72.30

Optional parts:

· F15 Cutting board walnut		40960000	133.20
· F16 Cutting board oak		40961000	100.00
· F17 Mobile drainboard	Stainless Steel	40962800	86.70
· F14 Multifunctional strainer	Matt Black	40963000	21.70

Measurements within scale drawings are in mm.

Technical specifications and units of measure are subject to change.

hansgrohe filter systems

Product lines at a glance

	Aqittura M91 FilterSystem	
	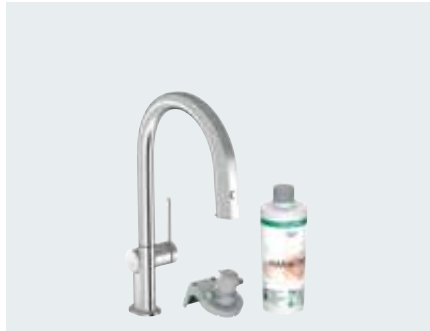	
Finish	-000, -670, -800	-000, -670, -800
Standard	■	■
sBox	■	
With pull-out function	■	
With swivel spout	■	■
Select digital		
Push	■	■
Two outlets	■	■

page 630

■ Available

hansgrohe kitchen taps

Product lines at a glance

	Aquno Select M81			**Metris Select M71**	
			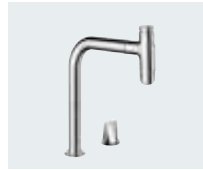		
Finish	-000, -670, -800	-000, -670, -800	-000, -340, -670, -800	-000, -800	-000, -800
Standard	■	■	■	■	■
EcoSmart					■
sBox	■	■	■	■	■
For window installation					
For LowPressure / vented hot water cylinders					
Device shut-off valve					
CoolStart					
Multiple spray types	■	■	■	■	
With pull-out spout	■	■	■	■	■
With swivel spout	■	■	■	■	■
Select	■	■	■	■	■
	page 634			page 635	

		Talis M51		**Talis M52**	
	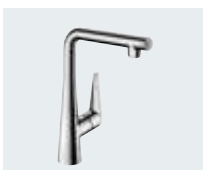	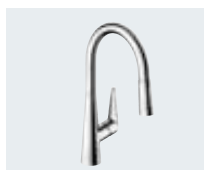		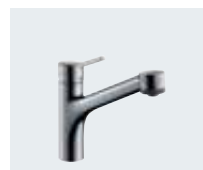	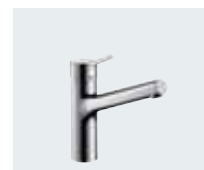
Finish	-000, -800	-000, -800	-000, -800	-000, -800	-000, -800
Standard	■	■	■	■	■
EcoSmart	■	■	■	■	■
sBox		■		■	
For window installation					
For LowPressure / vented hot water cylinders			■	■	
Device shut-off valve			■		
CoolStart					
Multiple spray types		■		■	
With pull-out spout		■		■	
With swivel spout	■	■	■	■	■
Select	■				
	page 645	page 650		page 652	

■ Available

Metris M71



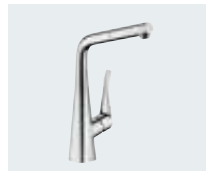


-000, -800	-000, -800	-000, -800	-000, -800
■	■	■	■
■	■	■	■
	■	■	
			■
			■
	■		
	■	■	
■	■	■	■
■			

page 641

Talis Select M51

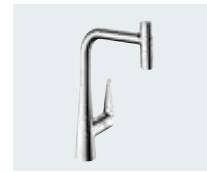
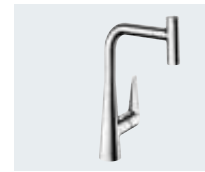

-000, -800	-000, -800
■	■
	■
■	■
■	
■	■
■	■
■	■

page 645

Talis M54





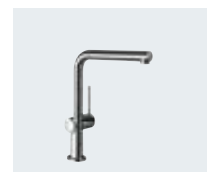
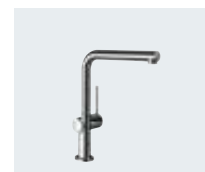

-000, -670, -800	-000, -670, -800	-000, -670, -800	-000, -670, -800	-000, -670, -800	-000, -670, -800
■	■	■	■	■	■
■		■	■	■	
■	■			■	
		■	■		■
■					
■	■			■	
■	■	■	■	■	■
■					

page 653

hansgrohe kitchen taps

Product lines at a glance

Focus M41







Finish	-000, -800	-000, -670, -800	-000, -670, -800	-000, -800	-000, -800
Standard	■	■	■	■	■
EcoSmart	■	■	■	■	■
sBox	■				■
For window installation					
For LowPressure / vented hot water cylinders		■		■	
Device shut-off valve		■		■	
CoolStart				■	
Multiple spray types	■				■
With pull-out spout	■				■
With swivel spout	■	■	■	■	■
Select					

page 658

page 661

Logis M31

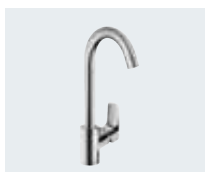


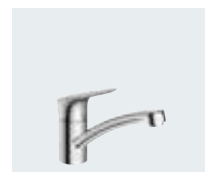

Logis M32

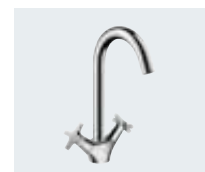

Finish	-000	-000	-000	-000	-000
Standard	■	■	■	■	■
EcoSmart	■		■	■	■
sBox					
For window installation			■		
For LowPressure / vented hot water cylinders				■	
Device shut-off valve			■		
CoolStart			■	■	
Multiple spray types					
With pull-out spout					
With swivel spout	■	■	■	■	■
Select					

page 668

page 670

■ Available

Focus M42

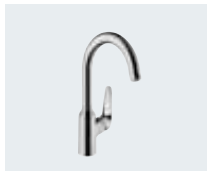


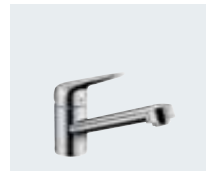

-000, -800	-000, -800	-000, -800	-000, -800
■	■	■	■
	■	■	■
		■	
	■		
	■		
■	■		
	■		■
		■	
■	■	■	■

page 661

Zesis M33




-000, -670, -800	-000, -670, -800
■	■
	■
	■
	■
	■
	■
■	
■	
■	■

page 665

Vernis M35




-000, -670	-000, -670
■	■
■	■

page 670

Aqittura M91

NEW



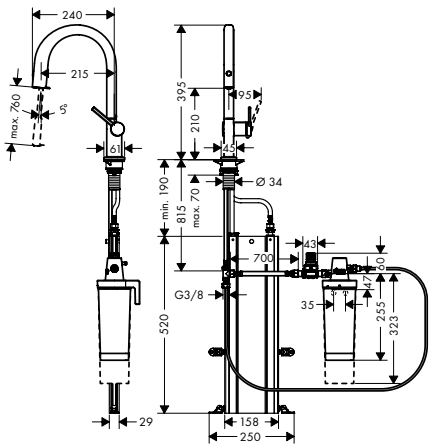

Aqittura M91 FilterSystem 210, pull-out spout, 1jet, sBox, starter set

- consists of: single lever kitchen mixer, hose box, filterhead, mineralisation cartridge Harmony with filter
- ComfortZone 210
- swivel range adjustable in 3 steps 60°, 110° or 150°
- laminar spray
- maximum flow rate at 3 bar: 6,5 l/min
- ceramic cartridge
- connection type: G ⅜ connections
- integrated non-return valve
- suitable for continuous flow water heaters
- sBox for quiet, smooth and protected hose guidance in the cabinet, under the countertop
- extension length up to 76 cm
- tap hole with Ø 35 mm required
- separate water supply for filtered and unfiltered water
- filtered still drinking water via push button at the spout
- filter capacity: 300 l
- filter connection: G ⅜ input and output

	finish	code no.	Euro
	Chrome	76800000	575.00
	Matt Black	76800670	805.00
	Stainless Steel Finish	76800800	747.50

Push · Two Outlets · Pull-out · Comfort Zone · sBox Kitchen · Quick Clean

available from March 2022

Optional parts:

NEW	· Filter active carbon	76814000	74.00
NEW	· Filter ion exchanger and active carbon	76815000	80.00
NEW	· Filter ion exchanger Pro and active carbon	76827000	115.00
NEW	· Mineralisation and filter Harmony	76828000	185.00
NEW	· Mineralisation and filter Life	76829000	190.00
NEW	· Mineralisation and filter Sport	76830000	190.00
NEW	· F23 Flowmeter	76818000	101.90

NEW



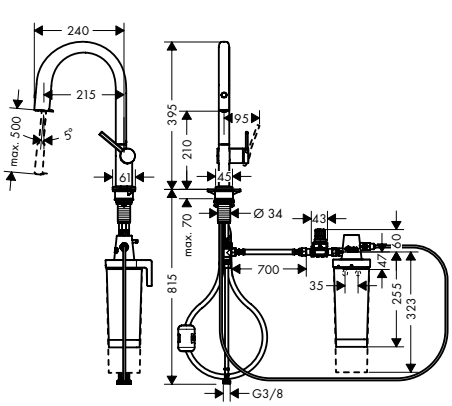

Aqittura M91 FilterSystem 210, pull-out spout, 1jet, starter set

- consists of: single lever kitchen mixer, filterhead, mineralisation cartridge Harmony with filter
- ComfortZone 210
- swivel range adjustable in 3 steps 60°, 110° or 150°
- laminar spray
- maximum flow rate at 3 bar: 9 l/min
- ceramic cartridge
- connection type: G ⅜ connections
- integrated non-return valve
- suitable for continuous flow water heaters
- extension length up to 50 cm
- tap hole with Ø 35 mm required
- separate water supply for filtered and unfiltered water
- filtered still drinking water via push button at the spout
- filter capacity: 300 l
- filter connection: G ⅜ input and output

	Chrome	76801000	525.00
	Matt Black	76801670	735.00
	Stainless Steel Finish	76801800	682.50

Push · Two Outlets · Pull-out · Comfort Zone · Quick Clean

available from March 2022

Optional parts:

NEW	· Filter active carbon	76814000	74.00
NEW	· Filter ion exchanger and active carbon	76815000	80.00
NEW	· Filter ion exchanger Pro and active carbon	76827000	115.00
NEW	· Mineralisation and filter Harmony	76828000	185.00
NEW	· Mineralisation and filter Life	76829000	190.00
NEW	· Mineralisation and filter Sport	76830000	190.00
NEW	· F23 Flowmeter	76818000	101.90

Measurements within scale drawings are in mm.

Technical specifications and units of measure are subject to change.

NEW



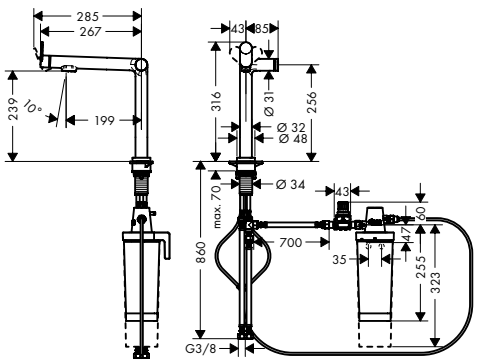

Aqittura M91 FilterSystem 240, 1jet, starter set

finish	code no.	Euro
Chrome	76802000	555.00
Matt Black	76802670	775.00
Stainless Steel Finish	76802800	721.50

Select · Two Outlets · Comfort Zone

available from March 2022

- consists of: single lever kitchen mixer, filterhead, mineralisation cartridge Harmony with filter
- ComfortZone 240
- swivel range adjustable in 2 steps 60° or 110°
- laminar spray
- maximum flow rate at 3 bar: 10,3 l/min
- ceramic cartridge
- connection type: G ⅜ connections
- integrated non-return valve
- suitable for continuous flow water heaters
- tap hole with Ø 35 mm required
- separate water supply for filtered and unfiltered water
- filtered still drinking water via Select button
- filter capacity: 300 l
- filter connection: G ⅜ input and output

Optional parts:

NEW	Filter active carbon	76814000	74.00
NEW	Filter ion exchanger and active carbon	76815000	80.00
NEW	Filter ion exchanger Pro and active carbon	76827000	115.00
NEW	Mineralisation and filter Harmony	76828000	185.00
NEW	Mineralisation and filter Life	76829000	190.00
NEW	Mineralisation and filter Sport	76830000	190.00
NEW	F23 Flowmeter	76818000	101.90

NEW



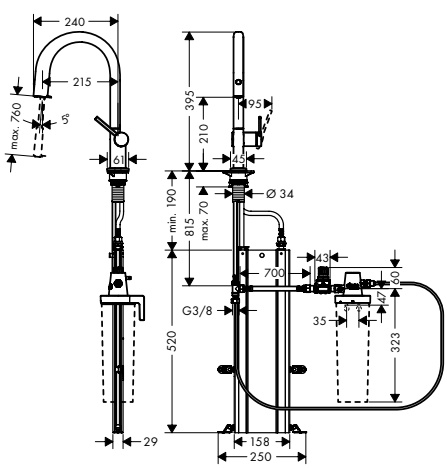

Aqittura M91 FilterSystem 210, pull-out spout, 1jet, sBox

finish	code no.	Euro
Chrome	76826000	500.00
Matt Black	76826670	700.00
Stainless Steel Finish	76826800	650.00

Push · Two Outlets · Pull-out · Comfort Zone · sBox Kitchen · Quick Clean

available from March 2022

- consists of: single lever kitchen mixer, hose box, filterhead
- ComfortZone 210
- swivel range adjustable in 3 steps 60°, 110° or 150°
- laminar spray
- maximum flow rate at 3 bar: 6,5 l/min
- ceramic cartridge
- connection type: G ⅜ connections
- integrated non-return valve
- suitable for continuous flow water heaters
- sBox for quiet, smooth and protected hose guidance in the cabinet, under the countertop
- extension length up to 76 cm
- tap hole with Ø 35 mm required
- separate water supply for filtered and unfiltered water
- filtered still drinking water via push button at the spout
- filter connection: G ⅜ input and output

Optional parts:

NEW	Filter active carbon	76814000	74.00
NEW	Filter ion exchanger and active carbon	76815000	80.00
NEW	Filter ion exchanger Pro and active carbon	76827000	115.00
NEW	Mineralisation and filter Harmony	76828000	185.00
NEW	Mineralisation and filter Life	76829000	190.00
NEW	Mineralisation and filter Sport	76830000	190.00
NEW	F23 Flowmeter	76818000	101.90

Measurements within scale drawings are in mm.

Technical specifications and units of measure are subject to change.

	finish	code no.	Euro
Aqittura M91 FilterSystem 210, pull-out spout, 1jet	Chrome	76803000	450.00
	Matt Black	76803670	630.00
	Stainless Steel Finish	76803800	585.00

Push · Two Outlets · Pull-out · Comfort Zone · Quick Clean

available from March 2022



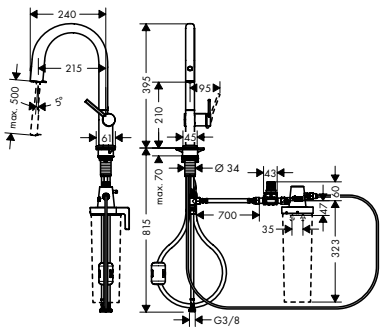

- consists of: single lever kitchen mixer, filterhead
- ComfortZone 210
- swivel range adjustable in 3 steps 60°, 110° or 150°
- laminar spray
- quick connect hose
- maximum flow rate at 3 bar: 9 l/min
- ceramic cartridge
- connection type: G ⅜ connections
- integrated non-return valve
- suitable for continuous flow water heaters
- extension length up to 50 cm
- tap hole with Ø 35 mm required
- separate water supply for filtered and unfiltered water
- filtered still drinking water via push button at the spout
- filter connection: G ⅜ input and output

Optional parts:

NEW	· Filter active carbon	76814000	74.00
NEW	· Filter ion exchanger and active carbon	76815000	80.00
NEW	· Filter ion exchanger Pro and active carbon	76827000	115.00
NEW	· Mineralisation and filter Harmony	76828000	185.00
NEW	· Mineralisation and filter Life	76829000	190.00
NEW	· Mineralisation and filter Sport	76830000	190.00
NEW	· F23 Flowmeter	76818000	101.90

	finish	code no.	Euro
Aqittura M91 FilterSystem 240, 1jet	Chrome	76804000	500.00
	Matt Black	76804670	700.00
	Stainless Steel Finish	76804800	650.00

Select · Two Outlets · Comfort Zone

available from March 2022



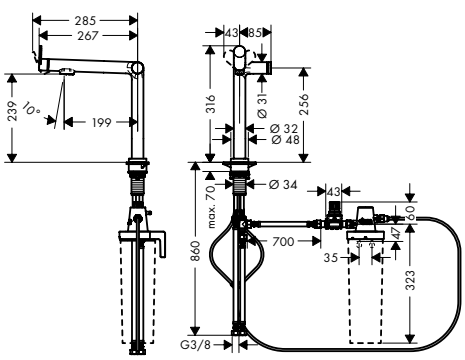

- consists of: single lever kitchen mixer, filterhead
- ComfortZone 240
- swivel range adjustable in 2 steps 60° or 110°
- laminar spray
- ceramic cartridge
- connection type: G ⅜ connections
- integrated non-return valve
- suitable for continuous flow water heaters
- tap hole with Ø 35 mm required
- separate water supply for filtered and unfiltered water
- filtered still drinking water via Select button
- filter connection: G ⅜ input and output

Optional parts:

NEW	· Filter active carbon	76814000	74.00
NEW	· Filter ion exchanger and active carbon	76815000	80.00
NEW	· Filter ion exchanger Pro and active carbon	76827000	115.00
NEW	· Mineralisation and filter Harmony	76828000	185.00
NEW	· Mineralisation and filter Life	76829000	190.00
NEW	· Mineralisation and filter Sport	76830000	190.00
NEW	· F23 Flowmeter	76818000	101.90

Filter active carbon		76814000	74.00

available from March 2022



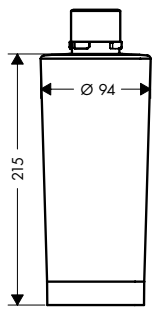

- suitable for: SodaSystem, FilterSystem
- usage: reduces harmful substances, bad odours and taste
- filter capacity: 4000 l (15° dH)
- recommended life cycle: 12 months
- connection type: 60° twist and lock connection suitable for hansgrohe filterhead

Measurements within scale drawings are in mm.

Technical specifications and units of measure are subject to change.

	finish	code no.	Euro

NEW



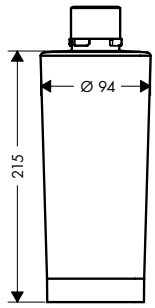

Filter ion exchanger and active carbon

76815000 — 80.00

available from March 2022

- suitable for: SodaSystem, FilterSystem
- usage: reduces the water hardness, reduces harmful substances, bad odours and taste
- filter capacity: 800 l (15° dH)
- recommended life cycle: 12 months
- connection type: 60° twist and lock connection suitable for hansgrohe filterhead

NEW



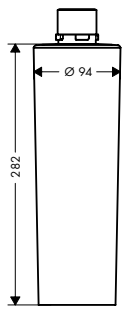

Filter ion exchanger Pro and active carbon

76827000 — 115.00

available from March 2022

- suitable for: SodaSystem, FilterSystem
- usage: reduces the water hardness, reduces harmful substances, bad odours and taste
- filter capacity: 1100 l (15° dH)
- recommended life cycle: 12 months
- connection type: 60° twist and lock connection suitable for hansgrohe filterhead

NEW



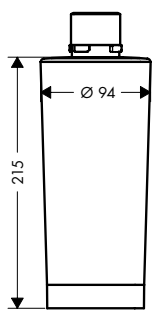

Mineralisation and filter Harmony

76828000 — 185.00

available from March 2022

- suitable for: SodaSystem, FilterSystem
- usage: enriches water with minerals, reduces harmful substances, bad odours and taste
- filter capacity: 300 l
- medium mineral discharge (over 300 l according to WQA): 60 mg/l magnesium, 25 mg/l potassium
- recommended life cycle: 6 months
- connection type: 60° twist and lock connection suitable for hansgrohe filterhead

NEW



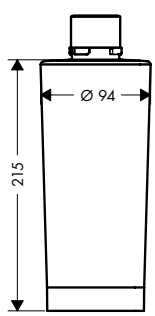

Mineralisation and filter Life

76829000 — 190.00

available from March 2022

- suitable for: SodaSystem, FilterSystem
- usage: enriches water with minerals, reduces harmful substances, bad odours and taste
- filter capacity: 300 l
- medium mineral discharge (over 300 l according to WQA): 30 mg/l magnesium, 15 mg/l potassium, 70 mg/l calcium
- recommended life cycle: 6 months
- connection type: 60° twist and lock connection suitable for hansgrohe filterhead

Measurements within scale drawings are in mm.

Technical specifications and units of measure are subject to change.

	finish	code no.	Euro

NEW



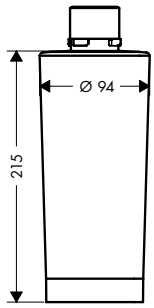

Mineralisation and filter Sport

76830000 — 190.00

- suitable for: SodaSystem, FilterSystem
- usage: enriches water with minerals, reduces harmful substances, bad odours and taste
- filter capacity: 300 l
- medium mineral discharge (over 300 l according to WQA): 55 mg/l magnesium, 40 mg/l potassium, 50 mg/l sodium
- recommended life cycle: 6 months
- connection type: 60° twist and lock connection suitable for hansgrohe filterhead

available from March 2022

Aquno Select M81



Aquno Select M81 Single lever kitchen mixer 170, pull-out spray, 3jet, sBox

Chrome	73831000	695.50
Matt Black	73831670	973.70
Stainless Steel Finish	73831800	909.50

Select · Pull-out · Comfort Zone · sBox Kitchen · Quick Clean

- consists of: single lever kitchen mixer, hose box, multifunctional strainer
- ComfortZone 170
- swivel range adjustable in 3 steps 60°, 110° or 150°
- laminar spray, shower spray, SatinFlow
- change between SatinFlow and pull-out spray at the touch of a button
- lockable shower spray, spray returns through pressing spray diverter
- MagFit magnetic shower support
- connection dimension: DN15
- maximum flow rate at 3 bar: 6 l/min
- ceramic cartridge
- connection type: G ⅜ connections
- integrated non-return valve
- sBox for quiet, smooth and protected hose guidance in the cabinet, under the countertop
- tap hole with Ø 35 mm required, recommendation: the middle of tap hole drilling should be max. 45 mm from the back side of of the bowl

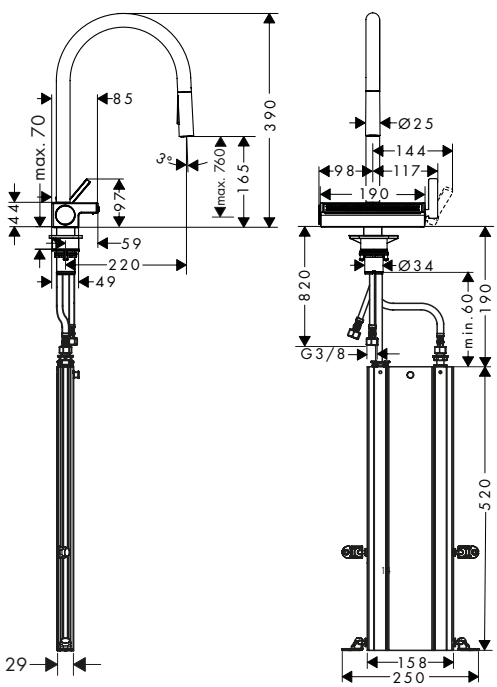

Alternative products:

- **Aquno Select M81** Single lever kitchen mixer 170, pull-out spray, 3jet

Chrome	73837000	642.00
Matt Black	73837670	898.80
Stainless Steel Finish	73837800	834.60

Measurements within scale drawings are in mm.

Technical specifications and units of measure are subject to change.



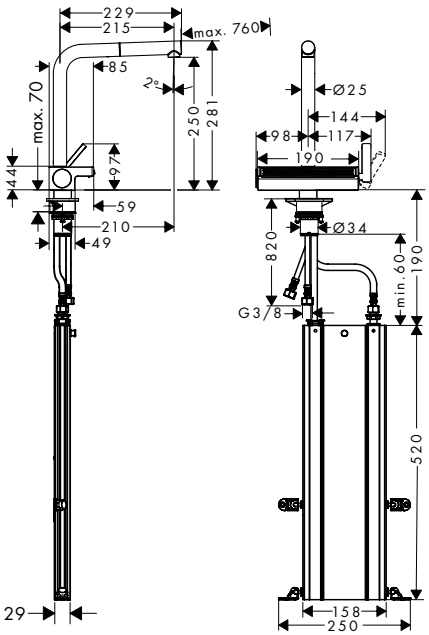

Aquno Select M81

Aquno Select M81 Single lever kitchen mixer 250, pull-out spout, 2jet, sBox

- consists of: single lever kitchen mixer, hose box, multifunctional strainer
- ComfortZone 250
- l-spout
- swivel range adjustable in 3 steps 60°, 110° or 150°
- laminar spray, SatinFlow
- change between SatinFlow and pull-out spout at the touch of a button
- MagFit magnetic shower support
- connection dimension: DN15
- maximum flow rate at 3 bar: 6 l/min
- ceramic cartridge
- connection type: G ⅜ connections
- integrated non-return valve
- sBox for quiet, smooth and protected hose guidance in the cabinet, under the countertop
- extension length up to 76 cm
- tap hole with Ø 35 mm required, recommendation: the middle of tap hole drilling should be max. 45 mm from the back side of of the bowl

finish	code no.	Euro
Chrome	73830000	642.00
Matt Black	73830670	898.80
Stainless Steel Finish	73830800	834.60

Select · Pull-out · Comfort Zone · sBox Kitchen · Quick Clean

Alternative products:

- **Aquno Select M81** Single lever kitchen mixer 250, pull-out spout, 2jet

Chrome	73836000	588.50
Matt Black	73836670	823.90
Stainless Steel Finish	73836800	770.40

Metris Select M71

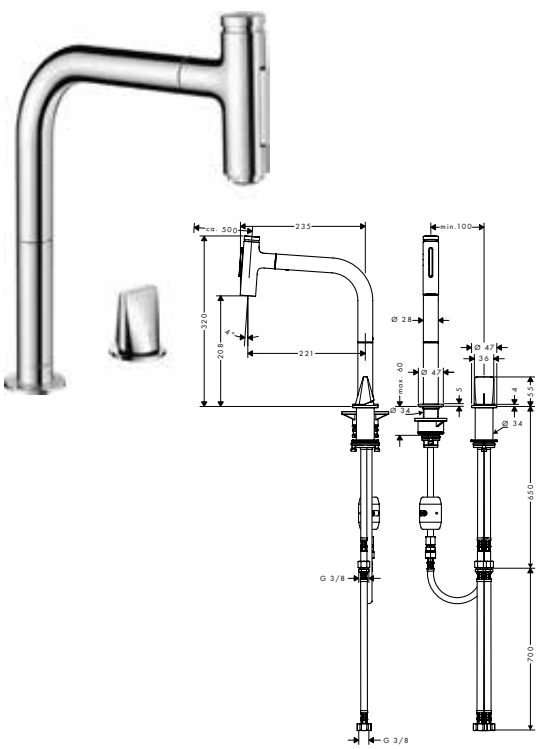

Metris Select M71 2-hole single lever kitchen mixer 200, pull-out spray, 2jet

- ComfortZone 200
- swivel range adjustable in 2 steps to 110° or 150°
- flexible position of faucet controls, 2 tap holes with Ø 35 mm required
- laminar spray, shower spray
- lockable shower spray, spray returns through pressing spray diverter and spray returns automatically through handle closing
- Select button for a comfortable start/stop of the water flow
- MagFit magnetic shower support
- connection dimension: DN15
- maximum flow rate at 3 bar: 6,8 l/min
- ceramic cartridge
- connection type: G ⅜ connections
- integrated non-return valve
- suitable for continuous flow water heaters

Chrome	73819000	509.40
Stainless Steel Finish	73819800	662.30

Select · Pull-out · Comfort Zone · Quick Clean

Measurements within scale drawings are in mm.

Technical specifications and units of measure are subject to change.

	finish	code no.	Euro



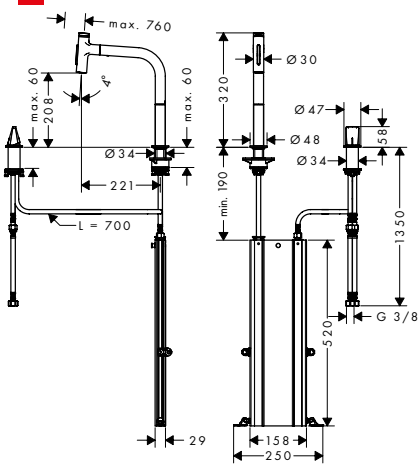

Metris Select M71 2-hole single lever kitchen mixer 200, pull-out spray, 2jet, sBox

- consists of: 2-hole single lever kitchen mixer, control unit, hose box
- ComfortZone 200
- swivel range adjustable in 2 steps to 110° or 150°
- flexible position of faucet controls, 2 tap holes with Ø 35 mm required
- laminar spray, shower spray
- lockable shower spray, spray returns through pressing spray diverter and spray returns automatically through handle closing
- Select button for a comfortable start/stop of the water flow
- MagFit magnetic shower support
- connection dimension: DN15
- maximum flow rate at 3 bar: 8 l/min
- ceramic cartridge
- connection type: G ⅜ connections
- integrated non-return valve
- suitable for continuous flow water heaters
- sBox for quiet, smooth and protected hose guidance in the cabinet, under the countertop
- extension length up to 76 cm

	Chrome	73818000	571.70
	Brushed Black Chrome	73818340	857.60
	Matt Black	73818670	800.30
	Stainless Steel Finish	73818800	738.20

Select · Pull-out · Comfort Zone · sBox Kitchen · Quick Clean

Alternative products:

- **Metris Select M71** 2-hole single lever kitchen mixer 200, pull-out spout, 1jet, sBox

	Chrome	73804000	571.20
	Stainless Steel Finish	73804800	742.40



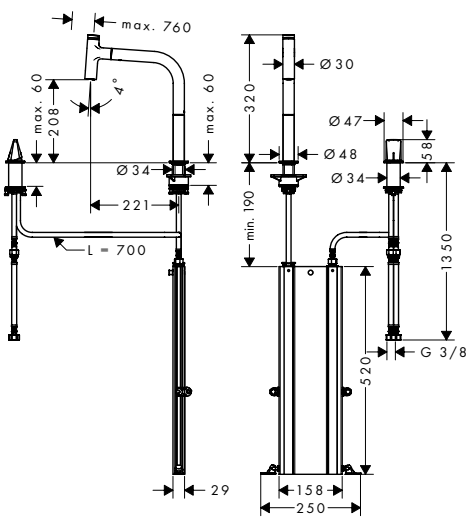

Metris Select M71 2-hole single lever kitchen mixer 200, pull-out spout, 1jet, sBox

- consists of: 2-hole single lever kitchen mixer, control unit, hose box
- ComfortZone 200
- swivel range adjustable in 2 steps to 110° or 150°
- flexible position of faucet controls, 2 tap holes with Ø 35 mm required
- normal spray
- Select button for a comfortable start/stop of the water flow
- MagFit magnetic shower support
- connection dimension: DN15
- maximum flow rate at 3 bar: 8 l/min
- ceramic cartridge
- connection type: G ⅜ connections
- integrated non-return valve
- suitable for continuous flow water heaters
- sBox for quiet, smooth and protected hose guidance in the cabinet, under the countertop

	Chrome	73804000	571.20
	Stainless Steel Finish	73804800	742.40

Select · Pull-out · AirPower · Comfort Zone · sBox Kitchen · Quick Clean

Alternative products:

- **Metris Select M71** 2-hole single lever kitchen mixer 200, Eco, pull-out spout, 1jet, sBox

	Chrome	73825000	571.20

- **Metris Select M71** 2-hole single lever kitchen mixer 200, pull-out spray, 2jet, sBox

	Chrome	73818000	571.70
	Brushed Black Chrome	73818340	857.60
	Matt Black	73818670	800.30
	Stainless Steel Finish	73818800	738.20

Measurements within scale drawings are in mm.

Technical specifications and units of measure are subject to change.

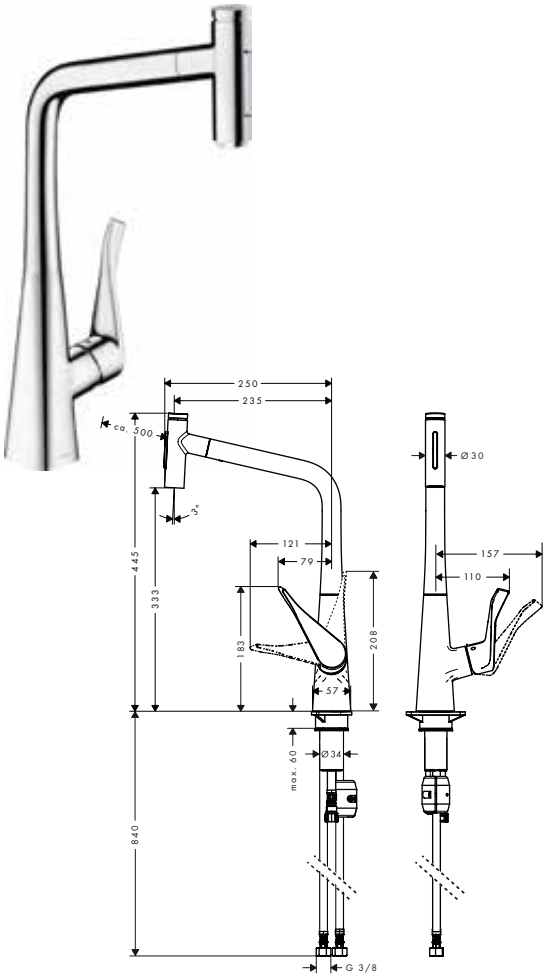

Metris Select M71 Single lever kitchen mixer 320, pull-out spray, 2jet

- ComfortZone 320
- swivel range adjustable in 2 steps to 110° or 150°
- laminar spray, shower spray
- lockable shower spray, spray returns through pressing spray diverter and spray returns automatically through handle closing
- Select button for a comfortable start/stop of the water flow
- MagFit magnetic shower support
- connection dimension: DN15
- maximum flow rate at 3 bar: 7,7 l/min
- ceramic cartridge
- connection type: G ⅜ connections
- temperature limitation adjustable
- integrated non-return valve
- suitable for continuous flow water heaters

finish	code no.	Euro
Chrome	73820000	515.70
Stainless Steel Finish	73820800	670.30

Select · Pull-out · Comfort Zone · Quick Clean

Alternative products:

- **Metris Select M71** Single lever kitchen mixer 320, pull-out spout, 1jet

Chrome	14884000	514.90
Stainless Steel Finish	14884800	669.30

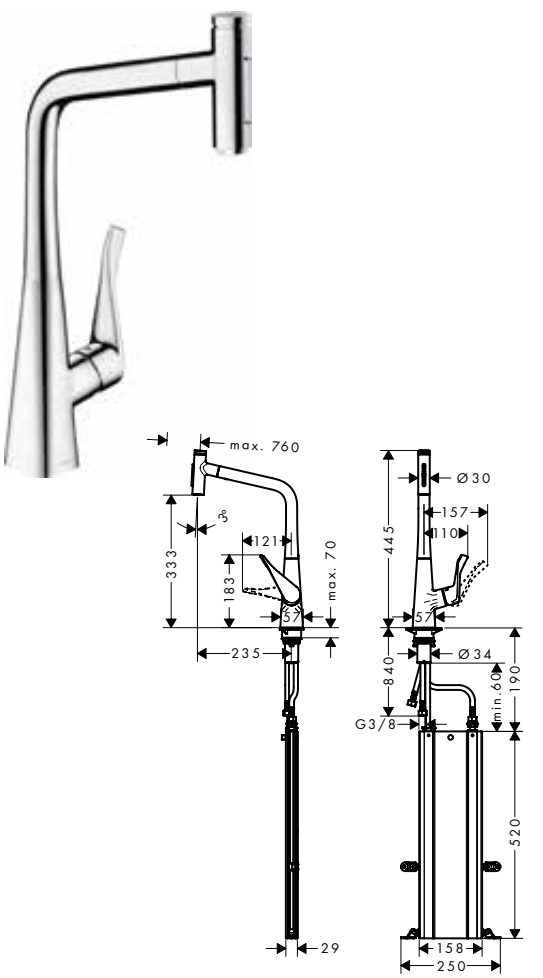

Metris Select M71 Single lever kitchen mixer 320, pull-out spray, 2jet, sBox

- consists of: single lever kitchen mixer, hose box
- ComfortZone 320
- swivel range adjustable in 2 steps to 110° or 150°
- laminar spray, shower spray
- lockable shower spray, spray returns through pressing spray diverter and spray returns automatically through handle closing
- Select button for a comfortable start/stop of the water flow
- MagFit magnetic shower support
- connection dimension: DN15
- maximum flow rate at 3 bar: 8 l/min
- ceramic cartridge
- connection type: G ⅜ connections
- temperature limitation adjustable
- integrated non-return valve
- suitable for continuous flow water heaters
- sBox for quiet, smooth and protected hose guidance in the cabinet, under the countertop
- extension length up to 76 cm
- tap hole with Ø 35 mm required

finish	code no.	Euro
Chrome	73816000	562.60
Stainless Steel Finish	73816800	707.90

Select · Pull-out · Comfort Zone · sBox Kitchen · Quick Clean

Alternative products:

- **Metris Select M71** Single lever kitchen mixer 320, pull-out spout, 1jet, sBox

Chrome	73803000	561.80
Stainless Steel Finish	73803800	711.30

Measurements within scale drawings are in mm.

Technical specifications and units of measure are subject to change.

	finish	code no.	Euro

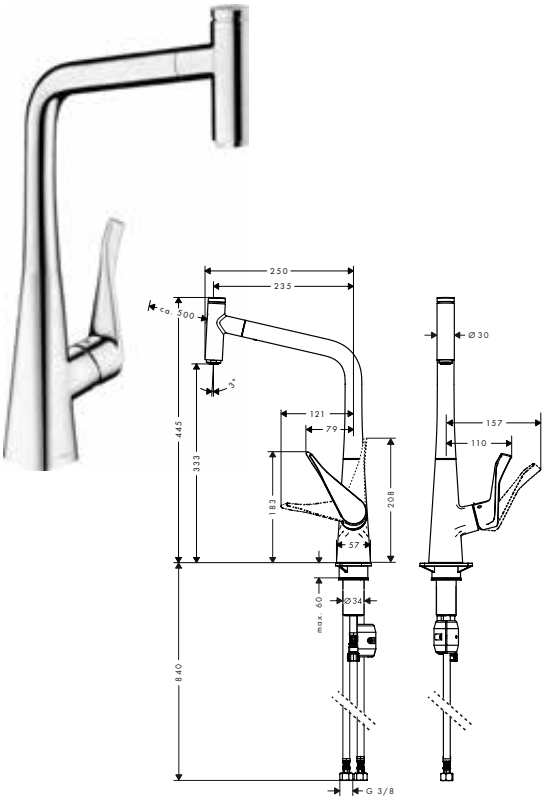

Metris Select M71 Single lever kitchen mixer 320, pull-out spout, 1jet

- ComfortZone 320
- swivel range adjustable in 2 steps to 110° or 150°
- laminar spray
- Select button for a comfortable start/stop of the water flow
- MagFit magnetic shower support
- connection dimension: DN15
- maximum flow rate at 3 bar: 8 l/min
- ceramic cartridge
- connection type: G ⅜ connections
- temperature limitation adjustable
- integrated non-return valve
- suitable for continuous flow water heaters
- significantly reduced splashing by soft start of the water flow

	Chrome	14884000	514.90
	Stainless Steel Finish	14884800	669.30

Select · Pull-out · Comfort Zone

Alternative products:

· **Metris Select M71** Single lever kitchen mixer 320, Eco, pull-out spout, 1jet	Chrome	14786000	514.90
· **Metris Select M71** Single lever kitchen mixer 320, pull-out spray, 2jet	Chrome	73820000	515.70
	Stainless Steel Finish	73820800	670.30

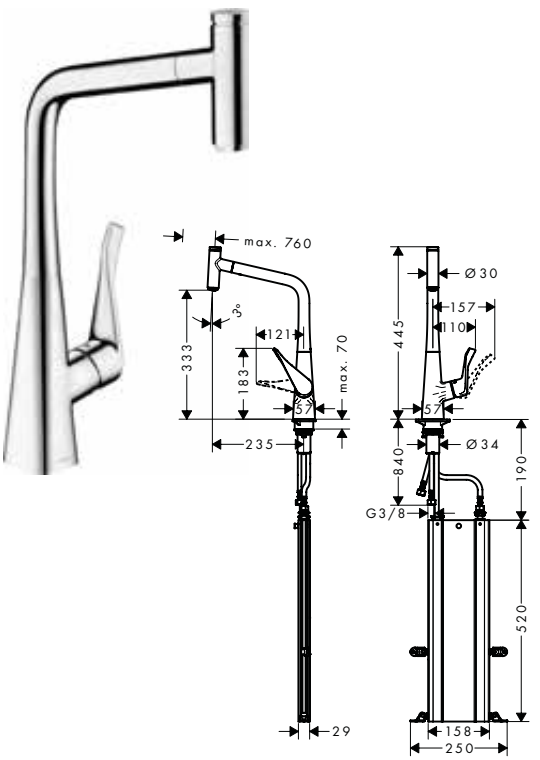

Metris Select M71 Single lever kitchen mixer 320, pull-out spout, 1jet, sBox

- consists of: single lever kitchen mixer, hose box
- ComfortZone 320
- swivel range adjustable in 2 steps to 110° or 150°
- laminar spray
- Select button for a comfortable start/stop of the water flow
- MagFit magnetic shower support
- connection dimension: DN15
- maximum flow rate at 3 bar: 8 l/min
- ceramic cartridge
- connection type: G ⅜ connections
- temperature limitation adjustable
- integrated non-return valve
- suitable for continuous flow water heaters
- sBox for quiet, smooth and protected hose guidance in the cabinet, under the countertop
- extension length up to 76 cm
- significantly reduced splashing by soft start of the water flow

	Chrome	73803000	561.80
	Stainless Steel Finish	73803800	711.30

Select · Pull-out · Comfort Zone · sBox Kitchen

Alternative products:

· **Metris Select M71** Single lever kitchen mixer 320, Eco, pull-out spout, 1jet, sBox	Chrome	73807000	561.80
· **Metris Select M71** Single lever kitchen mixer 320, pull-out spray, 2jet, sBox	Chrome	73816000	562.60
	Stainless Steel Finish	73816800	707.90

Measurements within scale drawings are in mm.

Technical specifications and units of measure are subject to change.

	finish	code no.	Euro

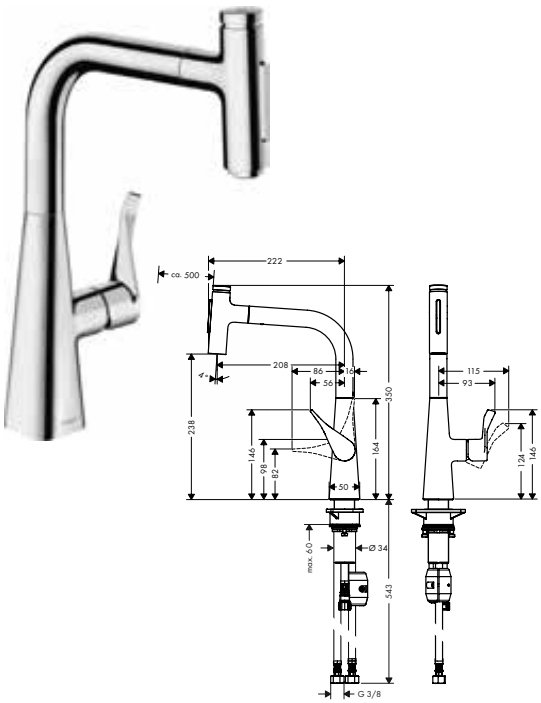

Metris Select M71 Single lever kitchen mixer 240, pull-out spray, 2jet

- ComfortZone 240
- l-spout
- swivel range adjustable in 2 steps to 110° or 150°
- laminar spray, shower spray
- lockable shower spray, spray returns through pressing spray diverter and spray returns automatically through handle closing
- Select button for a comfortable start/stop of the water flow
- MagFit magnetic shower support
- connection dimension: DN15
- maximum flow rate at 3 bar: 7,3 l/min
- ceramic cartridge
- connection type: G ⅜ connections
- temperature limitation adjustable
- integrated non-return valve
- suitable for continuous flow water heaters

	finish	code no.	Euro
	Chrome	73822000	460.10
	Stainless Steel Finish	73822800	598.50

Alternative products:

	finish	code no.	Euro
· **Metris Select M71** Single lever kitchen mixer 240, pull-out spout, 1jet	Chrome	14857000	459.70
	Stainless Steel Finish	14857800	597.50

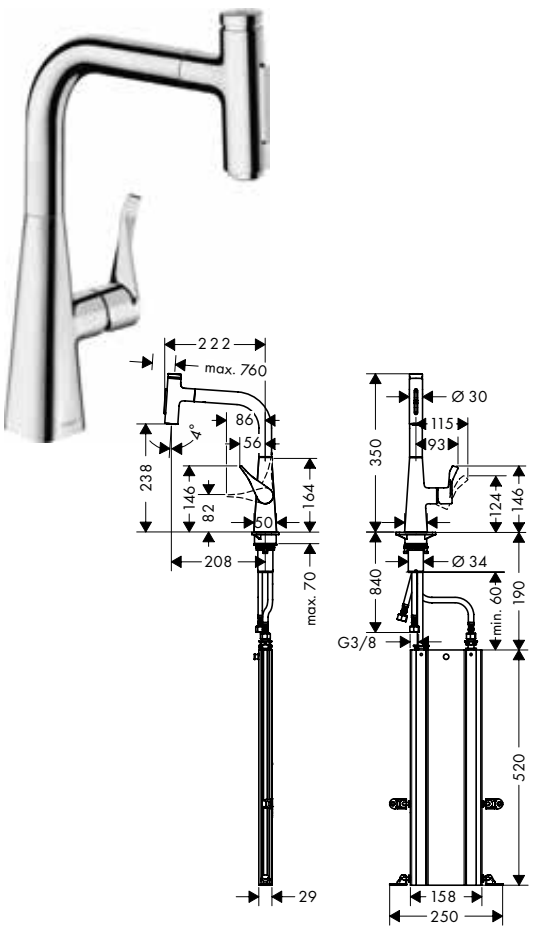

Metris Select M71 Single lever kitchen mixer 240, pull-out spray, 2jet, sBox

- consists of: single lever kitchen mixer, hose box
- ComfortZone 240
- l-spout
- swivel range adjustable in 2 steps to 110° or 150°
- laminar spray, shower spray
- lockable shower spray, spray returns through pressing spray diverter and spray returns automatically through handle closing
- Select button for a comfortable start/stop of the water flow
- MagFit magnetic shower support
- connection dimension: DN15
- maximum flow rate at 3 bar: 7 l/min
- ceramic cartridge
- connection type: G ⅜ connections
- temperature limitation adjustable
- integrated non-return valve
- suitable for continuous flow water heaters
- sBox for quiet, smooth and protected hose guidance in the cabinet, under the countertop
- extension length up to 76 cm

	finish	code no.	Euro
	Chrome	73817000	510.50
	Stainless Steel Finish	73817800	640.40

Alternative products:

	finish	code no.	Euro
· **Metris Select M71** Single lever kitchen mixer 240, pull-out spout, 1jet, sBox	Chrome	73802000	508.30
	Stainless Steel Finish	73802800	641.90

Measurements within scale drawings are in mm.

Technical specifications and units of measure are subject to change.

	finish	code no.	Euro

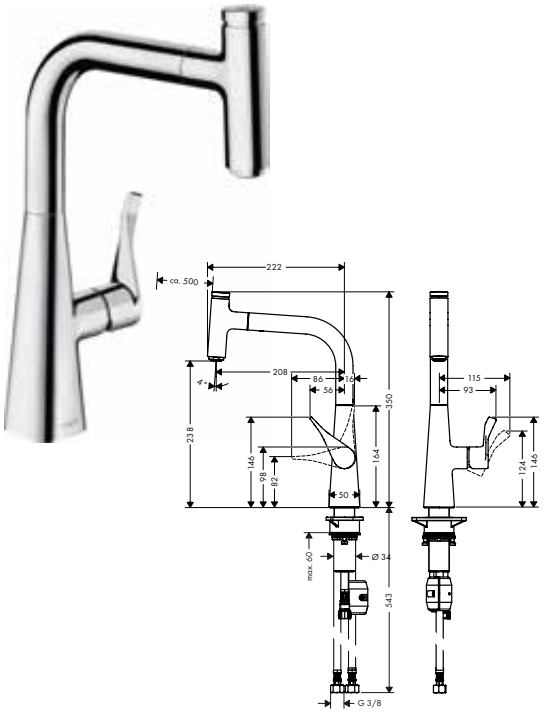

Metris Select M71 Single lever kitchen mixer 240, pull-out spout, 1jet

- ComfortZone 240
- swivel range adjustable in 2 steps to 110° or 150°
- laminar spray
- Select button for a comfortable start/stop of the water flow
- MagFit magnetic shower support
- connection dimension: DN15
- maximum flow rate at 3 bar: 8 l/min
- ceramic cartridge
- connection type: G ⅜ connections
- temperature limitation adjustable
- integrated non-return valve
- suitable for continuous flow water heaters
- significantly reduced splashing by soft start of the water flow

	finish	code no.	Euro
Chrome		14857000	459.70
Stainless Steel Finish		14857800	597.50

Select · Pull-out · Comfort Zone

Alternative products:

	finish	code no.	Euro
· **Metris Select M71** Single lever kitchen mixer 240, pull-out spray, 2jet	Chrome	73822000	460.10
	Stainless Steel Finish	73822800	598.50



Metris Select M71 Single lever kitchen mixer 240, pull-out spout, 1jet, sBox

- consists of: single lever kitchen mixer, hose box
- ComfortZone 240
- swivel range adjustable in 2 steps to 110° or 150°
- laminar spray
- Select button for a comfortable start/stop of the water flow
- MagFit magnetic shower support
- connection dimension: DN15
- maximum flow rate at 3 bar: 7 l/min
- ceramic cartridge
- connection type: G ⅜ connections
- temperature limitation adjustable
- integrated non-return valve
- suitable for continuous flow water heaters
- sBox for quiet, smooth and protected hose guidance in the cabinet, under the countertop
- extension length up to 76 cm
- significantly reduced splashing by soft start of the water flow

	finish	code no.	Euro
Chrome		73802000	508.30
Stainless Steel Finish		73802800	641.90

Select · Pull-out · Comfort Zone · sBox Kitchen

Alternative products:

	finish	code no.	Euro
· **Metris Select M71** Single lever kitchen mixer 240, pull-out spray, 2jet, sBox	Chrome	73817000	510.50
	Stainless Steel Finish	73817800	640.40

Measurements within scale drawings are in mm.

Technical specifications and units of measure are subject to change.

	finish	code no.	Euro
Metris Select M71 Single lever kitchen mixer 320, 1jet	Chrome	14883000	436.40
	Stainless Steel Finish	14883800	556.10

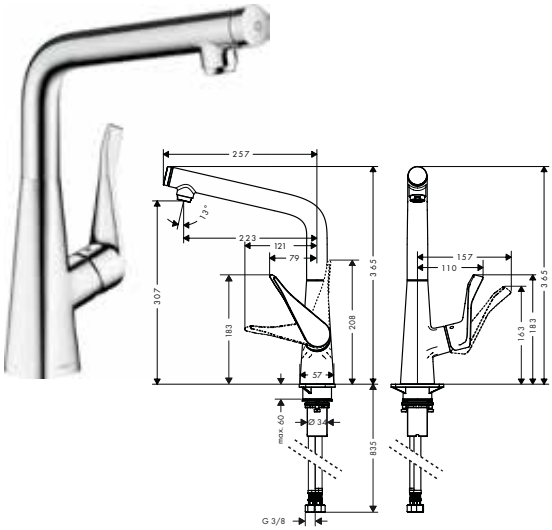

- ComfortZone 320
- swivel range adjustable in 3 steps 110°, 150° or 360°
- laminar spray
- Select button for a comfortable start/stop of the water flow
- connection dimension: DN15
- maximum flow rate at 3 bar: 8 l/min
- ceramic cartridge
- connection type: G ⅜ connections
- temperature limitation adjustable
- integrated non-return valve
- suitable for continuous flow water heaters
- significantly reduced splashing by soft start of the water flow

Alternative products:

· **Metris Select M71** Single lever kitchen mixer 320, Eco, 1jet	Chrome	14785000	436.40

Metris Select M71 Single lever kitchen mixer 260, 1jet	Chrome	14847000	382.60
	Stainless Steel Finish	14847800	498.00

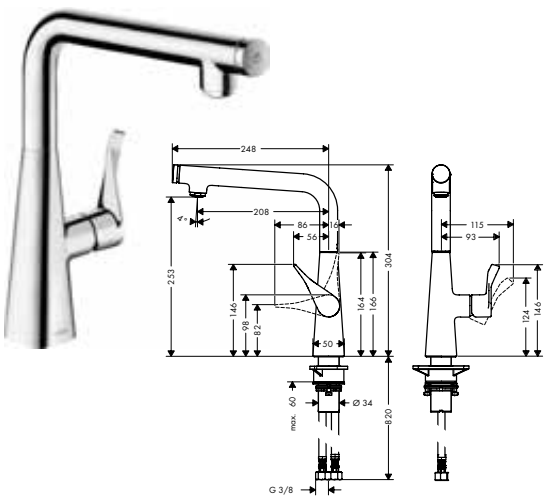

- ComfortZone 260
- swivel range adjustable in 3 steps 110°, 150° or 360°
- laminar spray
- Select button for a comfortable start/stop of the water flow
- connection dimension: DN15
- maximum flow rate at 3 bar: 9 l/min
- ceramic cartridge
- connection type: G ⅜ connections
- temperature limitation adjustable
- integrated non-return valve
- suitable for continuous flow water heaters
- significantly reduced splashing by soft start of the water flow

Metris M71

Metris M71 Single lever kitchen mixer 320, pull-out spray, 2jet	Chrome	14820000	502.90
	Stainless Steel Finish	14820800	653.40

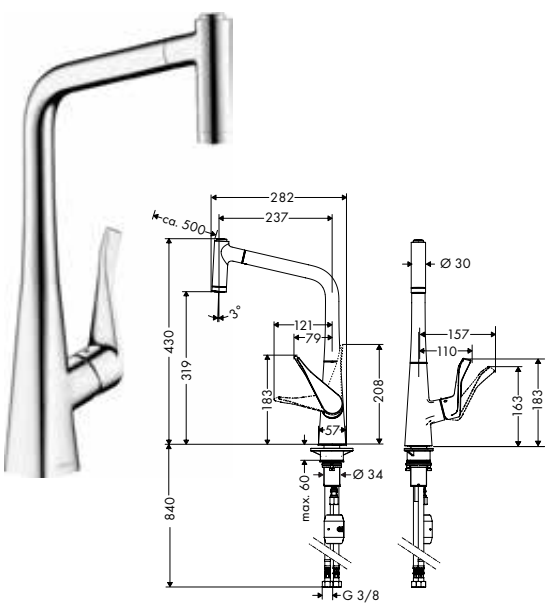

- ComfortZone 320
- swivel range adjustable in 2 steps to 110° or 150°
- laminar spray, shower spray
- lockable shower spray, spray returns automatically through handle closing
- MagFit magnetic shower support
- quick connect hose
- connection dimension: DN15
- maximum flow rate at 3 bar: 10 l/min
- ceramic cartridge
- connection type: G ⅜ connections
- temperature limitation adjustable
- integrated non-return valve
- suitable for continuous flow water heaters

Alternative products:

· **Metris M71** Single lever kitchen mixer 320, Eco, pull-out spray, 2jet	Chrome	14780000	502.90

Measurements within scale drawings are in mm.

	finish	code no.	Euro

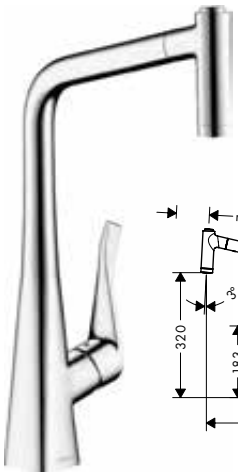

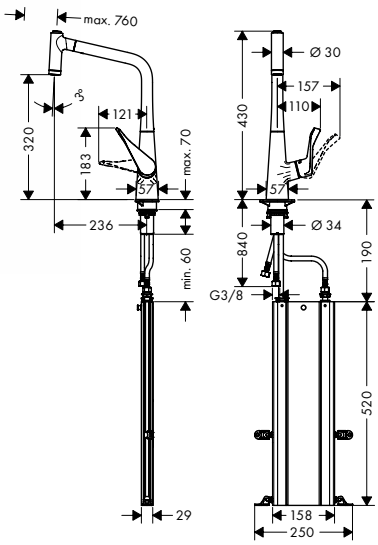

Metris M71 Single lever kitchen mixer 320, pull-out spray, 2jet, sBox

- consists of: single lever kitchen mixer, hose box
- ComfortZone 320
- swivel range adjustable in 2 steps to 110° or 150°
- laminar spray, shower spray
- lockable shower spray, spray returns automatically through handle closing
- MagFit magnetic shower support
- connection dimension: DN15
- maximum flow rate at 3 bar: 10 l/min
- ceramic cartridge
- connection type: G ⅜ connections
- temperature limitation adjustable
- integrated non-return valve
- suitable for continuous flow water heaters
- sBox for quiet, smooth and protected hose guidance in the cabinet, under the countertop
- extension length up to 76 cm

	Chrome	73801000	550.10
	Stainless Steel Finish	73801800	696.20

Pull-out · Comfort Zone · sBox Kitchen · Quick Clean

Alternative products:

· **Metris M71** Single lever kitchen mixer 320, Eco, pull-out spray, 2jet, sBox	Chrome	73824000	550.10



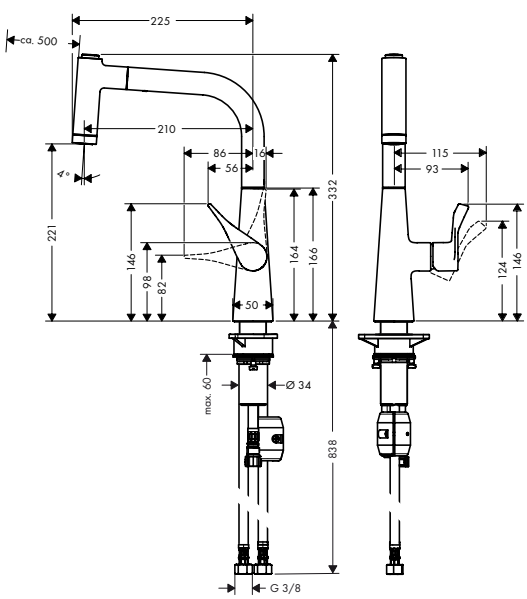

Metris M71 Single lever kitchen mixer 220, pull-out spray, 2jet

- ComfortZone 220
- swivel range adjustable in 2 steps to 110° or 150°
- laminar spray, shower spray
- lockable shower spray, spray returns automatically through handle closing
- MagFit magnetic shower support
- quick connect hose
- connection dimension: DN15
- maximum flow rate at 3 bar: 9 l/min
- ceramic cartridge
- connection type: G ⅜ connections
- temperature limitation adjustable
- integrated non-return valve
- suitable for continuous flow water heaters

	Chrome	14834000	448.00
	Stainless Steel Finish	14834800	582.30

Pull-out · Comfort Zone · Quick Clean

Measurements within scale drawings are in mm.

Technical specifications and units of measure are subject to change.

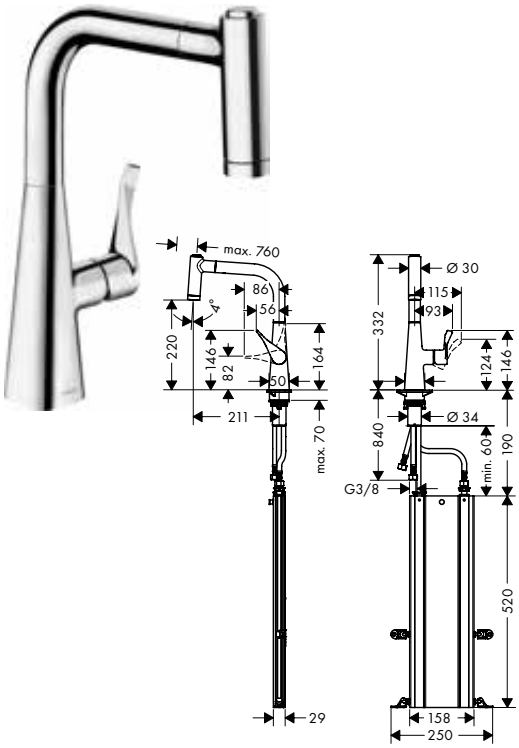

Metris M71 Single lever kitchen mixer 220, pull-out spray, 2jet, sBox

- consists of: single lever kitchen mixer, hose box
- ComfortZone 220
- swivel range adjustable in 2 steps to 110° or 150°
- laminar spray, shower spray
- lockable shower spray, spray returns automatically through handle closing
- MagFit magnetic shower support
- connection dimension: DN15
- maximum flow rate at 3 bar: 9 l/min
- ceramic cartridge
- connection type: G ⅜ connections
- temperature limitation adjustable
- integrated non-return valve
- suitable for continuous flow water heaters
- sBox for quiet, smooth and protected hose guidance in the cabinet, under the countertop
- extension length up to 76 cm

finish	code no.	Euro
Chrome	73800000	496.80
Stainless Steel Finish	73800800	627.00

Pull-out · Comfort Zone · sBox Kitchen · Quick Clean

Alternative products:

· **Metris M71** Single lever kitchen mixer 220, Eco, pull-out spray, 2jet, sBox	Chrome	73823000	496.80



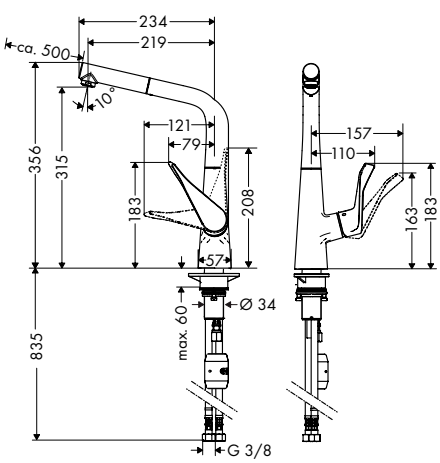

Metris M71 Single lever kitchen mixer 320, pull-out spout, 1jet

- ComfortZone 320
- swivel range adjustable in 2 steps to 110° or 150°
- laminar spray
- MagFit magnetic shower support
- quick connect hose
- connection dimension: DN15
- maximum flow rate at 3 bar: 10 l/min
- ceramic cartridge
- connection type: G ⅜ connections
- temperature limitation adjustable
- integrated non-return valve
- suitable for continuous flow water heaters
- significantly reduced splashing by soft start of the water flow

finish	code no.	Euro
Chrome	14821000	406.10
Stainless Steel Finish	14821800	528.60

Pull-out · Comfort Zone

Alternative products:

· **Metris M71** Single lever kitchen mixer 320, Eco, pull-out spout, 1jet	Chrome	14781000	406.10

Measurements within scale drawings are in mm.

Technical specifications and units of measure are subject to change.

	finish	code no.	Euro

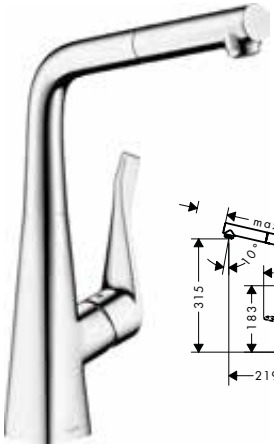

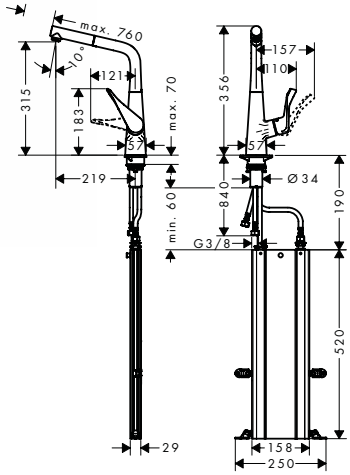

Metris M71 Single lever kitchen mixer 320, pull-out spout, 1jet, sBox

- consists of: single lever kitchen mixer, hose box
- ComfortZone 320
- swivel range adjustable in 2 steps to 110° or 150°
- laminar spray
- MagFit magnetic shower support
- connection dimension: DN15
- maximum flow rate at 3 bar: 10 l/min
- ceramic cartridge
- connection type: G ⅜ connections
- temperature limitation adjustable
- integrated non-return valve
- suitable for continuous flow water heaters
- sBox for quiet, smooth and protected hose guidance in the cabinet, under the countertop
- extension length up to 76 cm
- significantly reduced splashing by soft start of the water flow

	Chrome	73812000	456.30
	Stainless Steel Finish	73812800	575.00

Pull-out · Comfort Zone · sBox Kitchen

Alternative products:

· **Metris M71** Single lever kitchen mixer 320, Eco, pull-out spout, 1jet, sBox	Chrome	73828000	456.30

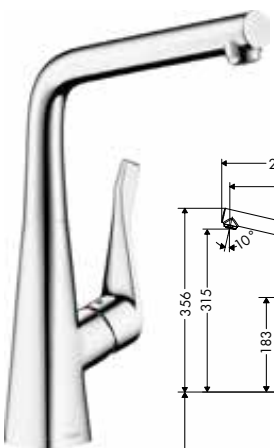

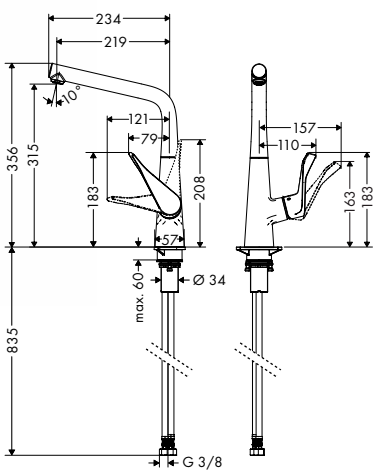

Metris M71 Single lever kitchen mixer 320, 1jet

- ComfortZone 320
- swivel range adjustable in 3 steps 110°, 150° or 360°
- laminar spray
- connection dimension: DN15
- maximum flow rate at 3 bar: 12 l/min
- ceramic cartridge
- connection type: G ⅜ connections
- temperature limitation adjustable
- suitable for continuous flow water heaters
- significantly reduced splashing by soft start of the water flow

	Chrome	14822000	343.60
	Stainless Steel Finish	14822800	446.80

Comfort Zone

Alternative products:

· **Metris M71** Single lever kitchen mixer 320, Eco, 1jet	Chrome	14782000	343.60
· **Metris M71** Single lever kitchen mixer 320, installation in front of a window, 1jet	Chrome	14823000	406.10

Measurements within scale drawings are in mm.

Technical specifications and units of measure are subject to change.

	finish	code no.	Euro

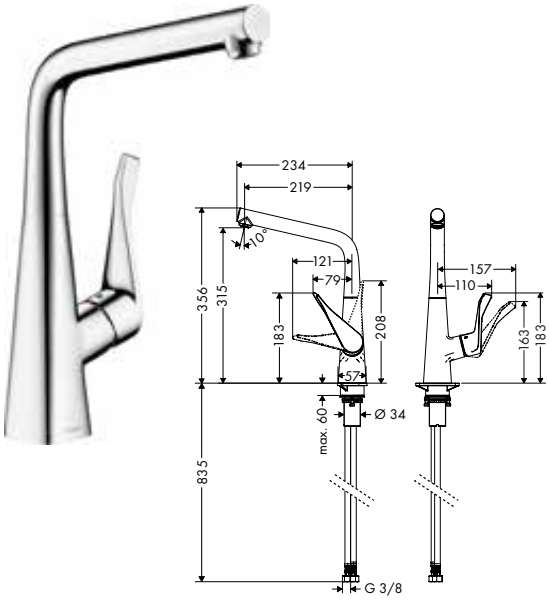

Metris M71 Single lever kitchen mixer 320, installation in front of a window, 1jet

- ComfortZone 320
- swivel range adjustable in 3 steps 110°, 150° or 360°
- installation in front of the window, can be laid flat, base height 57 mm
- laminar spray
- connection dimension: DN15
- maximum flow rate at 3 bar: 12 l/min
- ceramic cartridge
- connection type: G ⅜ connections
- temperature limitation adjustable
- suitable for continuous flow water heaters
- significantly reduced splashing by soft start of the water flow

	finish	code no.	Euro
	Chrome	14823000	406.10

Comfort Zone · Tilt Function

Alternative products:

· **Metris M71** Single lever kitchen mixer 320, 1jet	Chrome	14822000	343.60
	Stainless Steel Finish	14822800	446.80

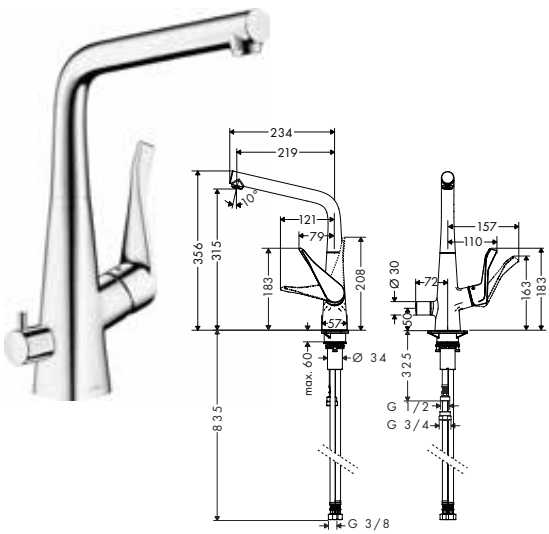

Metris M71 Single lever kitchen mixer 320, device shut-off valve,1jet

	finish	code no.	Euro
	Chrome	14888000	464.40

Comfort Zone

- ComfortZone 320
- swivel range adjustable in 3 steps 110°, 150° or 360°
- laminar spray
- with integrated shut-off valve
- connection dimension: DN15
- maximum flow rate at 3 bar: 13 l/min
- ceramic cartridge
- connection type: G ⅜ connections
- temperature limitation adjustable
- suitable for continuous flow water heaters
- significantly reduced splashing by soft start of the water flow

Talis Select M51

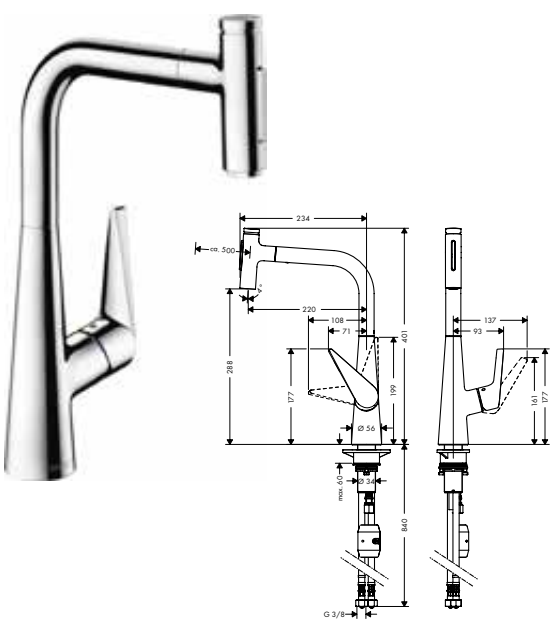

Talis Select M51 Single lever kitchen mixer 300, pull-out spray, 2jet

	finish	code no.	Euro
	Chrome	72823000	478.50
	Stainless Steel Finish	72823800	622.40

Select · Pull-out · Comfort Zone · Quick Clean

- ComfortZone 300
- swivel range adjustable in 2 steps to 110° or 150°
- laminar spray, shower spray
- lockable shower spray, spray returns through pressing spray diverter and spray returns automatically through handle closing
- Select button for a comfortable start/stop of the water flow
- MagFit magnetic shower support
- connection dimension: DN15
- maximum flow rate at 3 bar: 8 l/min
- ceramic cartridge
- connection type: G ⅜ connections
- temperature limitation adjustable
- integrated non-return valve
- suitable for continuous flow water heaters

Alternative products:

· **Talis Select M51** Single lever kitchen mixer 300, pull-out spout, 1jet	Chrome	72821000	477.90
	Stainless Steel Finish	72821800	621.60

Measurements within scale drawings are in mm.

	finish	code no.	Euro

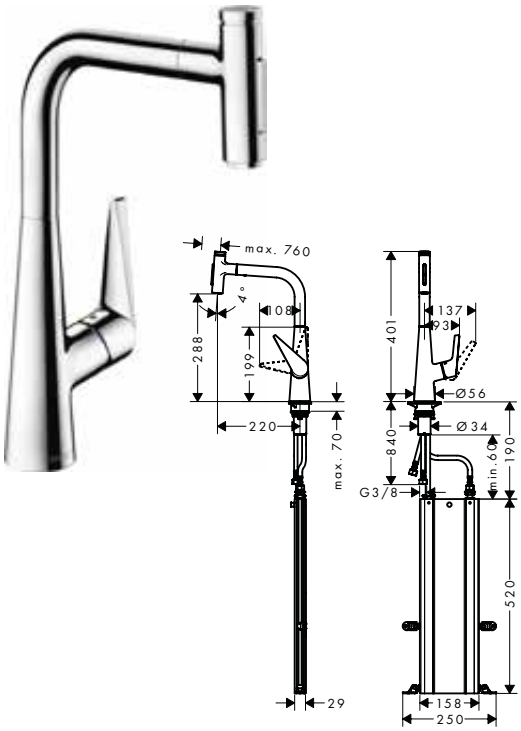

Talis Select M51 Single lever kitchen mixer 300, pull-out spray, 2jet, sBox

- consists of: single lever kitchen mixer, hose box
- ComfortZone 300
- swivel range adjustable in 2 steps to 110° or 150°
- laminar spray, shower spray
- lockable shower spray, spray returns through pressing spray diverter and spray returns automatically through handle closing
- Select button for a comfortable start/stop of the water flow
- MagFit magnetic shower support
- connection dimension: DN15
- maximum flow rate at 3 bar: 8 l/min
- ceramic cartridge
- connection type: G ⅜ connections
- temperature limitation adjustable
- integrated non-return valve
- suitable for continuous flow water heaters
- sBox for quiet, smooth and protected hose guidance in the cabinet, under the countertop
- extension length up to 76 cm

	Chrome	73867000	527.80
	Stainless Steel Finish	73867800	663.00

Alternative products:

· **Talis Select M51** Single lever kitchen mixer 300, pull-out spout, 1jet, sBox	Chrome	73853000	526.10
	Stainless Steel Finish	73853800	665.10

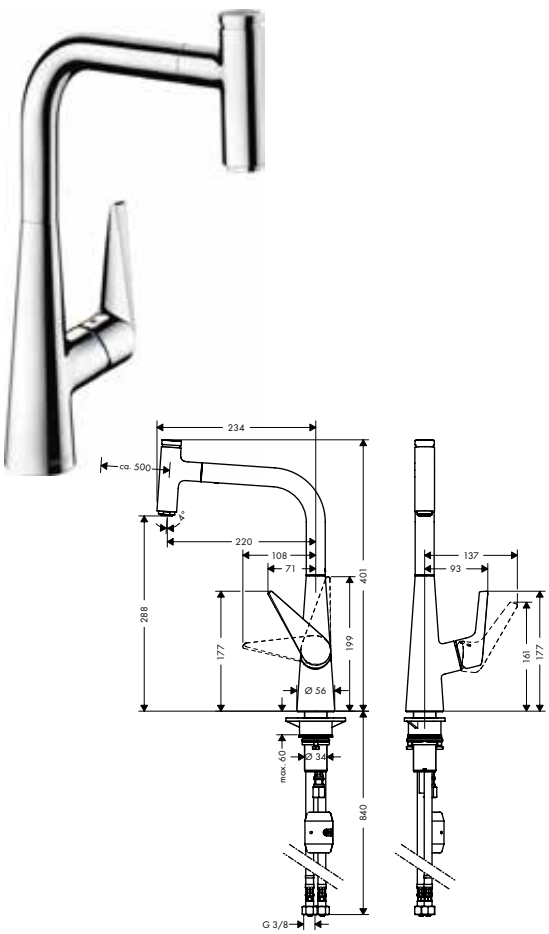

Talis Select M51 Single lever kitchen mixer 300, pull-out spout, 1jet

- ComfortZone 300
- swivel range adjustable in 2 steps to 110° or 150°
- normal spray
- Select button for a comfortable start/stop of the water flow
- MagFit magnetic shower support
- quick connect hose
- connection dimension: DN15
- maximum flow rate at 3 bar: 8 l/min
- ceramic cartridge
- connection type: G ⅜ connections
- temperature limitation adjustable
- integrated non-return valve
- suitable for continuous flow water heaters

	Chrome	72821000	477.90
	Stainless Steel Finish	72821800	621.60

Alternative products:

· **Talis Select M51** Single lever kitchen mixer 300, Eco, pull-out spout, 1jet	Chrome	72826000	477.90
· **Talis Select M51** Single lever kitchen mixer 300, pull-out spray, 2jet	Chrome	72823000	478.50
	Stainless Steel Finish	72823800	622.40

Measurements within scale drawings are in mm.

Technical specifications and units of measure are subject to change.

	finish	code no.	Euro
Talis Select M51 Single lever kitchen mixer 300, pull-out spout, 1jet, sBox	Chrome	73853000	526.10
	Stainless Steel Finish	73853800	665.10

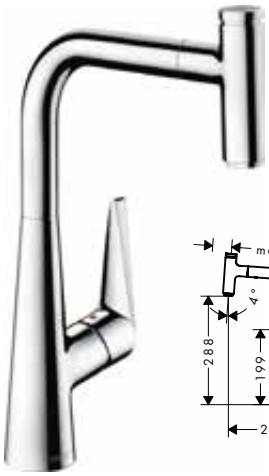

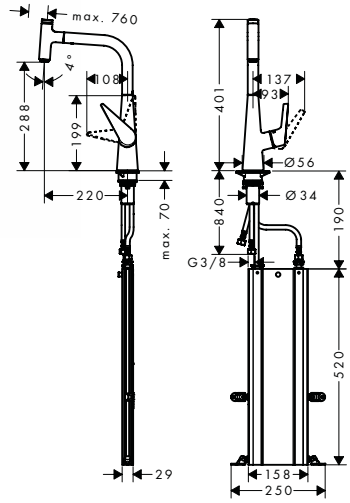

- consists of: single lever kitchen mixer, hose box
- ComfortZone 300
- swivel range adjustable in 2 steps to 110° or 150°
- normal spray
- Select button for a comfortable start/stop of the water flow
- MagFit magnetic shower support
- connection dimension: DN15
- maximum flow rate at 3 bar: 8 l/min
- ceramic cartridge
- connection type: G ⅜ connections
- temperature limitation adjustable
- integrated non-return valve
- suitable for continuous flow water heaters
- sBox for quiet, smooth and protected hose guidance in the cabinet, under the countertop
- extension length up to 76 cm

Alternative products:

· **Talis Select M51** Single lever kitchen mixer 300, pull-out spray, 2jet, sBox	Chrome	73867000	527.80
	Stainless Steel Finish	73867800	663.00

Talis Select M51 Single lever kitchen mixer 220, pull-out spray, 2jet	Chrome	72824000	425.00
	Stainless Steel Finish	72824800	551.90



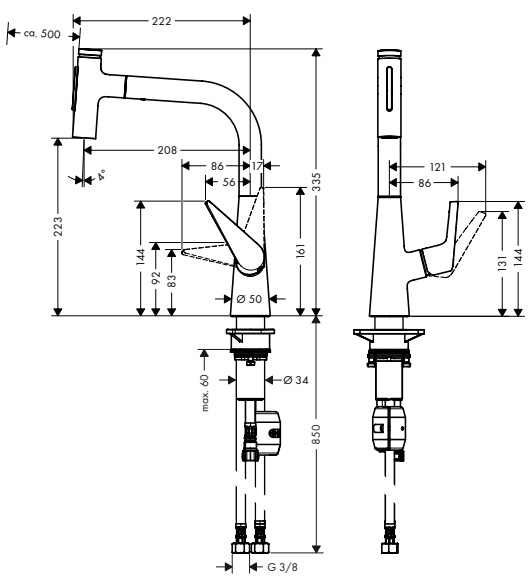

- ComfortZone 220
- swivel range adjustable in 2 steps to 110° or 150°
- laminar spray, shower spray
- lockable shower spray, spray returns through pressing spray diverter and spray returns automatically through handle closing
- Select button for a comfortable start/stop of the water flow
- MagFit magnetic shower support
- connection dimension: DN15
- maximum flow rate at 3 bar: 7,3 l/min
- ceramic cartridge
- connection type: G ⅜ connections
- temperature limitation adjustable
- integrated non-return valve
- suitable for continuous flow water heaters

Alternative products:

· **Talis Select M51** Single lever kitchen mixer 220, pull-out spout, 1jet	Chrome	72822000	424.30
	Stainless Steel Finish	72822800	551.60

Measurements within scale drawings are in mm.

Technical specifications and units of measure are subject to change.

	finish	code no.	Euro



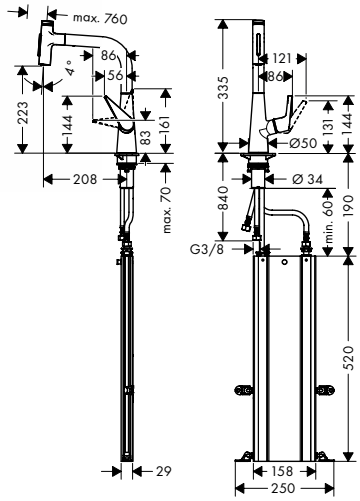

Talis Select M51 Single lever kitchen mixer 220, pull-out spray, 2jet, sBox

- consists of: single lever kitchen mixer, hose box
- ComfortZone 220
- swivel range adjustable in 2 steps to 110° or 150°
- laminar spray, shower spray
- lockable shower spray, spray returns through pressing spray diverter and spray returns automatically through handle closing
- Select button for a comfortable start/stop of the water flow
- MagFit magnetic shower support
- connection dimension: DN15
- maximum flow rate at 3 bar: 8 l/min
- ceramic cartridge
- connection type: G ⅜ connections
- temperature limitation adjustable
- integrated non-return valve
- suitable for continuous flow water heaters
- sBox for quiet, smooth and protected hose guidance in the cabinet, under the countertop
- extension length up to 76 cm

	Chrome	73868000	477.20
	Stainless Steel Finish	73868800	597.10

Select · Pull-out · Comfort Zone · sBox Kitchen · Quick Clean

Alternative products:

· **Talis Select M51** Single lever kitchen mixer 220, pull-out spout, 1jet, sBox	Chrome	73852000	474.00
	Stainless Steel Finish	73852800	597.30



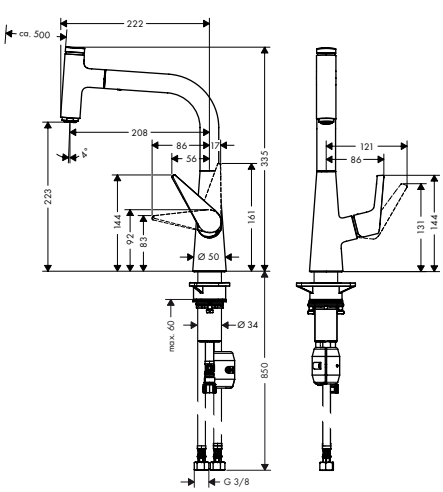

Talis Select M51 Single lever kitchen mixer 220, pull-out spout, 1jet

- ComfortZone 220
- swivel range adjustable in 2 steps to 110° or 150°
- normal spray
- Select button for a comfortable start/stop of the water flow
- MagFit magnetic shower support
- connection dimension: DN15
- maximum flow rate at 3 bar: 8 l/min
- ceramic cartridge
- connection type: G ⅜ connections
- temperature limitation adjustable
- integrated non-return valve
- suitable for continuous flow water heaters

	Chrome	72822000	424.30
	Stainless Steel Finish	72822800	551.60

Select · Pull-out · AirPower · Comfort Zone · Quick Clean

Alternative products:

· **Talis Select M51** Single lever kitchen mixer 220, pull-out spray, 2jet	Chrome	72824000	425.00
	Stainless Steel Finish	72824800	551.90

Measurements within scale drawings are in mm.

Technical specifications and units of measure are subject to change.

	finish	code no.	Euro



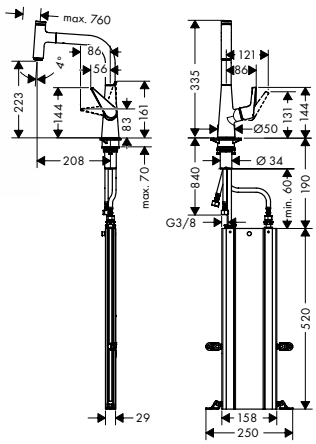

Talis Select M51 Single lever kitchen mixer 220, pull-out spout, 1jet, sBox

- consists of: single lever kitchen mixer, hose box
- ComfortZone 220
- swivel range adjustable in 2 steps to 110° or 150°
- normal spray
- Select button for a comfortable start/stop of the water flow
- MagFit magnetic shower support
- connection dimension: DN15
- maximum flow rate at 3 bar: 20 l/min
- ceramic cartridge
- connection type: G ⅜ connections
- temperature limitation adjustable
- integrated non-return valve
- suitable for continuous flow water heaters
- sBox for quiet, smooth and protected hose guidance in the cabinet, under the countertop
- extension length up to 76 cm

	finish	code no.	Euro
	Chrome	73852000	474.00
	Stainless Steel Finish	73852800	597.30

Select · Pull-out · AirPower · Comfort Zone · sBox Kitchen · Quick Clean

Alternative products:

	finish	code no.	Euro
· **Talis Select M51** Single lever kitchen mixer 220, pull-out spray, 2jet, sBox	Chrome	73868000	477.20
	Stainless Steel Finish	73868800	597.10



Talis Select M51 Single lever kitchen mixer 300, 1jet

- ComfortZone 300
- swivel range adjustable in 3 steps 110°, 150° or 360°
- normal spray
- Select button for a comfortable start/stop of the water flow
- connection dimension: DN15
- maximum flow rate at 3 bar: 9 l/min
- ceramic cartridge
- connection type: G ⅜ connections
- temperature limitation adjustable
- integrated non-return valve
- suitable for continuous flow water heaters

	finish	code no.	Euro
	Chrome	72820000	394.60
	Stainless Steel Finish	72820800	513.20

Select · AirPower · Comfort Zone · Quick Clean

Alternative products:

	finish	code no.	Euro
· **Talis Select M51** Single lever kitchen mixer 300, Eco, 1jet	Chrome	72825000	394.60

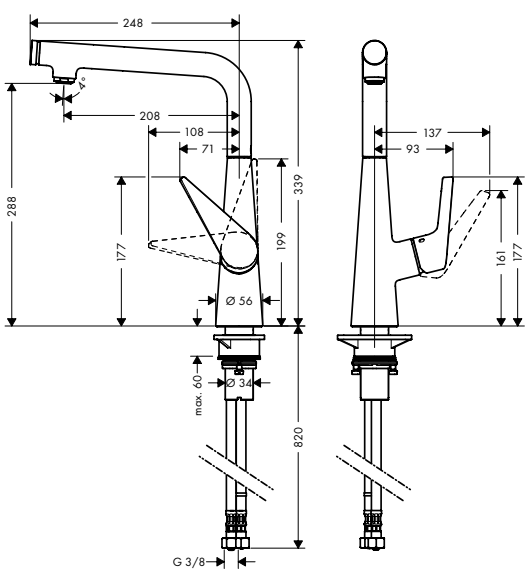

Measurements within scale drawings are in mm.

Technical specifications and units of measure are subject to change.

Talis M51

	finish	code no.	Euro



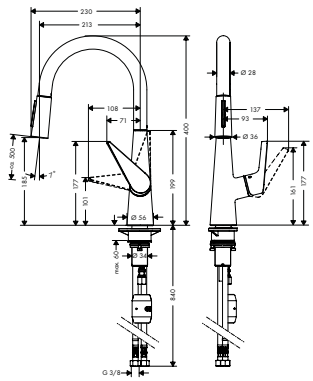

Talis M51 Single lever kitchen mixer 200, pull-out spray, 2jet

- ComfortZone 200
- swivel range adjustable in 2 steps to 110° or 150°
- laminar spray, shower spray
- lockable shower spray, spray returns through pressing spray diverter
- MagFit magnetic shower support
- quick connect hose
- connection dimension: DN15
- maximum flow rate at 3 bar: 9 l/min
- ceramic cartridge
- connection type: G ⅜ connections
- temperature limitation adjustable
- integrated non-return valve
- suitable for continuous flow water heaters

	Chrome	72813000	392.30
	Stainless Steel Finish	72813800	509.80

Pull-out · Comfort Zone · Quick Clean

Alternative products:

· **Talis M51** Single lever kitchen mixer 200, Eco, pull-out spray, 2jet	Chrome	72817000	392.30



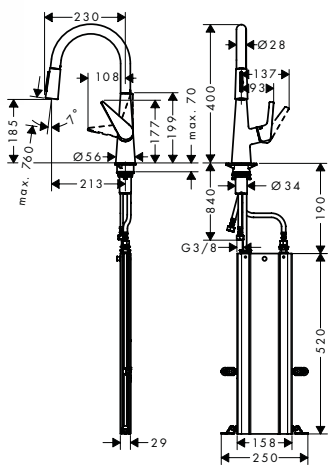

Talis M51 Single lever kitchen mixer 200, pull-out spray, 2jet, sBox

- consists of: single lever kitchen mixer, hose box
- ComfortZone 200
- swivel range adjustable in 2 steps to 110° or 150°
- laminar spray and shower spray
- lockable shower spray, spray returns through pressing spray diverter
- MagFit magnetic shower support
- connection dimension: DN15
- maximum flow rate at 3 bar: 9 l/min
- ceramic cartridge
- connection type: G ⅜ connections
- temperature limitation adjustable
- integrated non-return valve
- suitable for continuous flow water heaters
- sBox for quiet, smooth and protected hose guidance in the cabinet, under the countertop
- extension length up to 76 cm

	Chrome	73851000	443.00
	Stainless Steel Finish	73851800	556.80

Pull-out · Comfort Zone · sBox Kitchen · Quick Clean

Alternative products:

· **Talis M51** Single lever kitchen mixer 200, Eco, pull-out spray, 2jet, sBox	Chrome	73876000	443.00



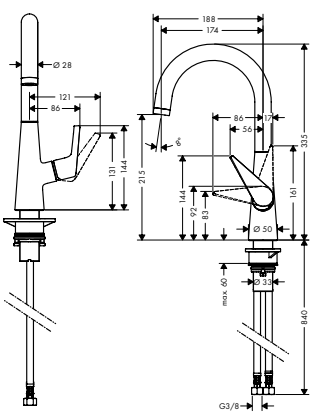

Talis M51 Single lever kitchen mixer 220, 1jet

- ComfortZone 220
- swivel range adjustable in 3 steps 110°, 150° or 360°
- normal spray
- connection dimension: DN15
- maximum flow rate at 3 bar: 10 l/min
- ceramic cartridge
- connection type: G ⅜ connections
- temperature limitation adjustable
- suitable for continuous flow water heaters

	Chrome	72814000	239.90
	Stainless Steel Finish	72814800	311.70

AirPower · Comfort Zone · Quick Clean

Measurements within scale drawings are in mm.

Technical specifications and units of measure are subject to change.

	finish	code no.	Euro
Talis M51 Single lever kitchen mixer 160, pull-out spray, 2jet	Chrome	72815000	341.90
	Stainless Steel Finish	72815800	444.40



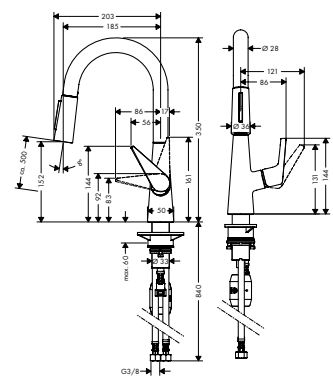

- ComfortZone 160
- swivel range adjustable in 2 steps to 110° or 150°
- laminar spray, normal spray
- lockable shower spray, spray returns through pressing spray diverter
- MagFit magnetic shower support
- quick connect hose
- connection dimension: DN15
- maximum flow rate at 3 bar: 9 l/min
- ceramic cartridge
- connection type: G ⅜ connections
- temperature limitation adjustable
- integrated non-return valve
- suitable for continuous flow water heaters

	finish	code no.	Euro
Talis M51 Single lever kitchen mixer 160, pull-out spray, 2jet, sBox	Chrome	73850000	394.00
	Stainless Steel Finish	73850800	493.40



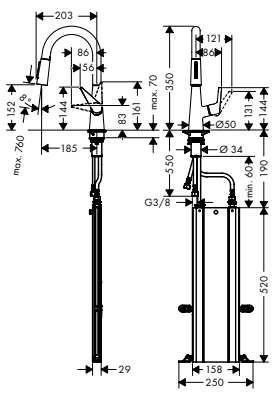

- consists of: single lever kitchen mixer, hose box
- ComfortZone 160
- swivel range adjustable in 2 steps to 110° or 150°
- laminar spray, shower spray
- lockable shower spray, spray returns through pressing spray diverter
- MagFit magnetic shower support
- connection dimension: DN15
- maximum flow rate at 3 bar: 9 l/min
- ceramic cartridge
- connection type: G ⅜ connections
- temperature limitation adjustable
- integrated non-return valve
- suitable for continuous flow water heaters
- sBox for quiet, smooth and protected hose guidance in the cabinet, under the countertop
- extension length up to 76 cm

	finish	code no.	Euro
Talis M51 Single lever kitchen mixer 260, 1jet	Chrome	72810000	273.20
	Stainless Steel Finish	72810800	355.20

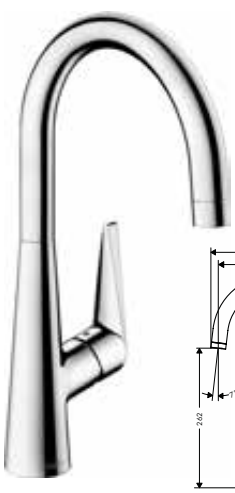

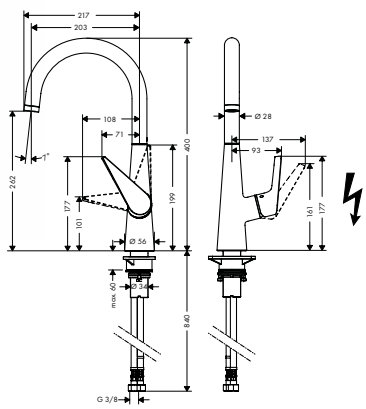

- ComfortZone 260
- swivel range adjustable in 3 steps 110°, 150° or 360°
- normal spray
- connection dimension: DN15
- maximum flow rate at 3 bar: 10 l/min
- ceramic cartridge
- connection type: G ⅜ connections
- temperature limitation adjustable
- suitable for continuous flow water heaters

Alternative products:

· **Talis M51** Single lever kitchen mixer 260, Eco, 1jet	Chrome	72816000	273.20
· **Talis M51** Single lever kitchen mixer 260, LowPressure/vented hot water cylinders, 1jet	Chrome	72812000	308.80

Measurements within scale drawings are in mm.

Technical specifications and units of measure are subject to change.

	finish	code no.	Euro

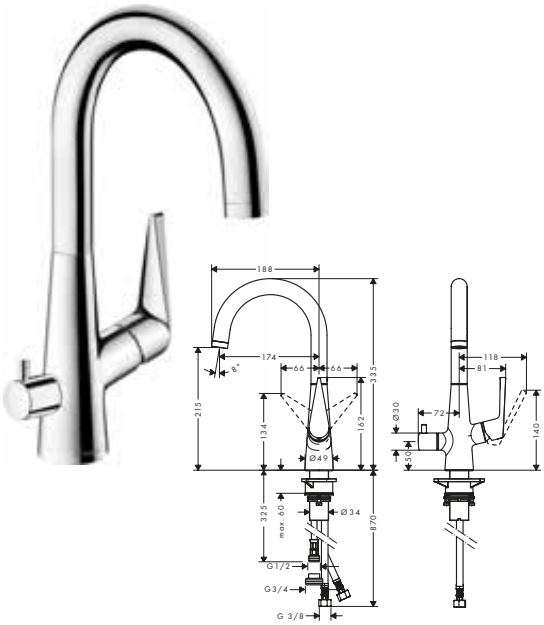

Talis M51 Single lever kitchen mixer 220, device shut-off valve, 1jet — Chrome — 72811000 — 319.70

AirPower · Comfort Zone · Quick Clean

- ComfortZone 220
- swivel range adjustable in 3 steps 110°, 150° or 360°
- normal spray
- with integrated shut-off valve
- connection dimension: DN15
- maximum flow rate at 3 bar: 10 l/min
- ceramic cartridge
- connection type: G ⅜ connections
- temperature limitation adjustable
- suitable for continuous flow water heaters

Talis M52

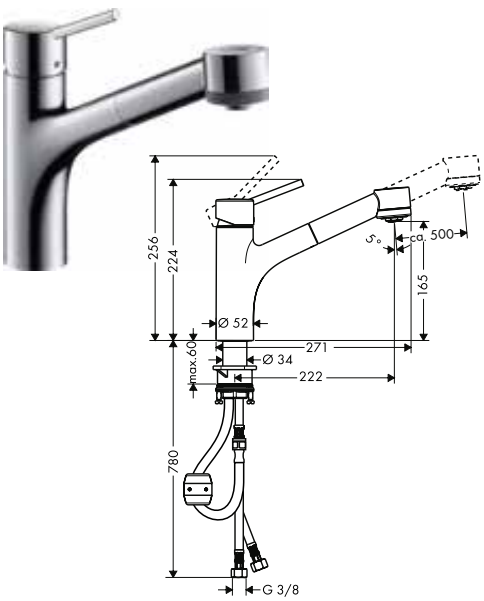

Talis M52 Single lever kitchen mixer 170, pull-out spray, 2jet — Chrome — 32841000 — 355.00

Pull-out · AirPower · Comfort Zone · Quick Clean

- consists of: single lever kitchen mixer
- ComfortZone 170
- swivel range 150°
- normal spray, shower spray
- lockable shower spray, spray returns automatically through handle closing
- quick connect hose
- connection dimension: DN15
- maximum flow rate at 3 bar: 10 l/min
- ceramic cartridge
- connection type: G ⅜ connections
- temperature limitation adjustable
- integrated non-return valve
- suitable for continuous flow water heaters

Alternative products:

- **Talis M52** Single lever kitchen mixer 170, LowPressure/vented hot water cylinders, pull-out spray, 2jet — Chrome — 32842000 — 378.40
- **Talis M52** Single lever kitchen mixer 170, Eco, pull-out spray, 2jet — Chrome — 32845000 — 355.00



Talis M52 Single lever kitchen mixer 170, pull-out spray, 2jet, sBox

Chrome — 73860000 — 406.80
Stainless Steel Finish — 73860800 — 510.00

Pull-out · AirPower · Comfort Zone · sBox Kitchen · Quick Clean

- consists of: single lever kitchen mixer, hose box
- ComfortZone 170
- swivel range 150°
- normal spray, shower spray
- lockable shower spray, spray returns automatically through handle closing
- connection dimension: DN15
- maximum flow rate at 3 bar: 10 l/min
- ceramic cartridge
- connection type: G ⅜ connections
- temperature limitation adjustable
- integrated non-return valve
- suitable for continuous flow water heaters
- sBox for quiet, smooth and protected hose guidance in the cabinet, under the countertop
- extension length up to 76 cm

Measurements within scale drawings are in mm.

Technical specifications and units of measure are subject to change.

	finish	code no.	Euro

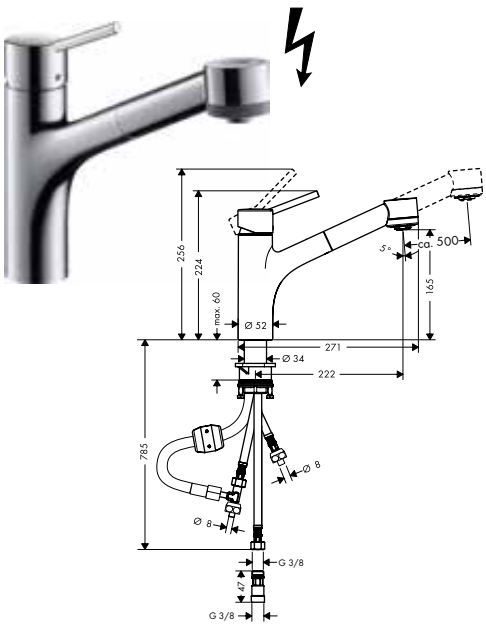

Talis M52 Single lever kitchen mixer 170, LowPressure/vented hot water cylinders, pull-out spray, 2jet

- for vented hot water cylinders (no pressure)
- ComfortZone 170
- swivel range 150°
- normal spray, shower spray
- non-lockable shower spray
- connection dimension: DN15
- maximum flow rate at 3 bar: 5 l/min
- ceramic cartridge
- connection type: G ⅜ connections
- temperature limitation adjustable
- integrated non-return valve
- not suitable for continuous flow water heaters

Pull-out · Comfort Zone · Quick Clean · Low Pressure

	Chrome	32842000	378.40

Alternative products:

· **Talis M52** Single lever kitchen mixer 170, pull-out spray, 2jet	Chrome	32841000	355.00

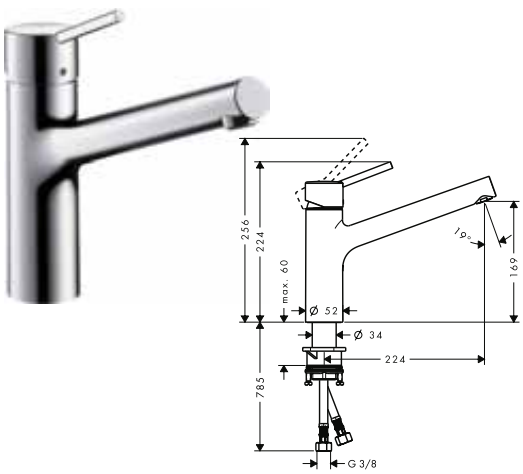

Talis M52 Single lever kitchen mixer 170, 1jet

- ComfortZone 170
- swivel range 150°
- normal spray
- connection dimension: DN15
- maximum flow rate at 3 bar: 16 l/min
- ceramic cartridge
- connection type: G ⅜ connections
- temperature limitation adjustable
- suitable for continuous flow water heaters

AirPower · Comfort Zone · Quick Clean

	Chrome	32851000	253.50

Alternative products:

· **Talis M52** Single lever kitchen mixer 170, Eco, 1jet	Chrome	32857000	253.50

Talis M54

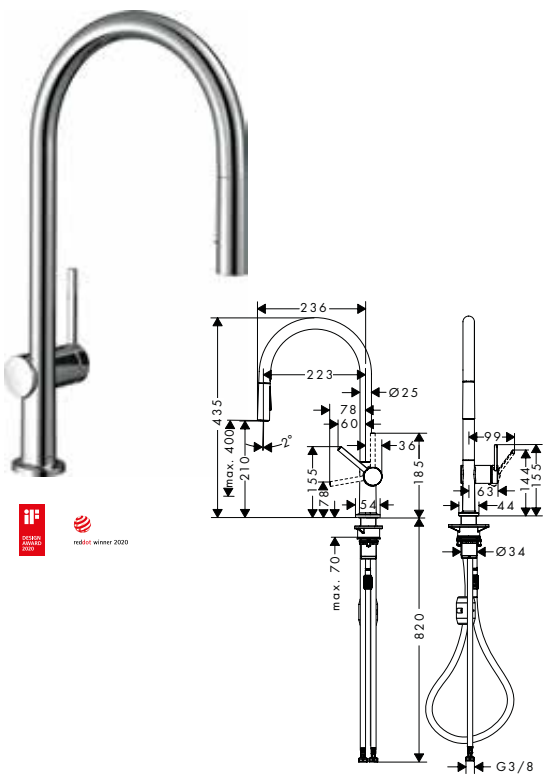

Talis M54 Single lever kitchen mixer 210, pull-out spray, 2jet

- ComfortZone 210
- swivel range adjustable in 4 steps 60°, 110°, 150° or 360°
- laminar spray, shower spray
- lockable shower spray, spray returns through pressing spray diverter and spray returns automatically through handle closing
- quick connect hose
- connection dimension: DN15
- maximum flow rate at 3 bar: 8 l/min
- ceramic cartridge
- connection type: G ⅜ connections
- temperature limitation adjustable
- integrated non-return valve
- suitable for continuous flow water heaters

Pull-out · Comfort Zone · Quick Clean

	Chrome	72800000	321.00
	Matt Black	72800670	417.30
	Stainless Steel Finish	72800800	417.30

Alternative products:

· **Talis M54** Single lever kitchen mixer 210, Eco, pull-out spray, 2jet	Chrome	72842000	321.00
	Matt Black	72842670	417.30

Measurements within scale drawings are in mm.

Technical specifications and units of measure are subject to change.

	finish	code no.	Euro
Talis M54 Single lever kitchen mixer 210, pull-out spray, 2jet, sBox	Chrome	72801000	374.50
	Matt Black	72801670	486.90
	Stainless Steel Finish	72801800	486.90

Pull-out · Comfort Zone · sBox Kitchen · Quick Clean

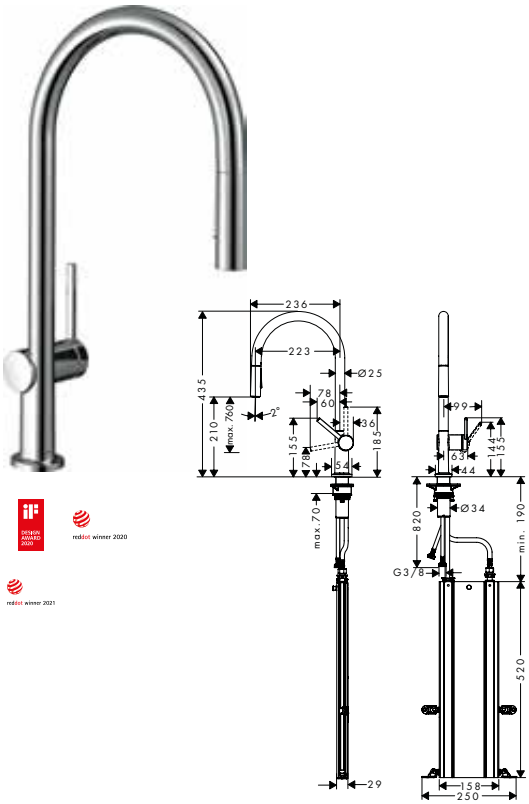

- consists of: single lever kitchen mixer, hose box
- ComfortZone 210
- swivel range adjustable in 4 steps 60°, 110°, 150° or 360°
- laminar spray, shower spray
- lockable shower spray, spray returns through pressing spray diverter and spray returns automatically through handle closing
- connection dimension: DN15
- maximum flow rate at 3 bar: 7 l/min
- ceramic cartridge
- connection type: G ⅜ connections
- temperature limitation adjustable
- integrated non-return valve
- suitable for continuous flow water heaters
- sBox for quiet, smooth and protected hose guidance in the cabinet, under the countertop
- extension length up to 76 cm

Talis M54 Single lever kitchen mixer 210, pull-out spout, 1jet	Chrome	72802000	272.90
	Matt Black	72802670	355.20
	Stainless Steel Finish	72802800	355.20

Pull-out · AirPower · Comfort Zone · Quick Clean



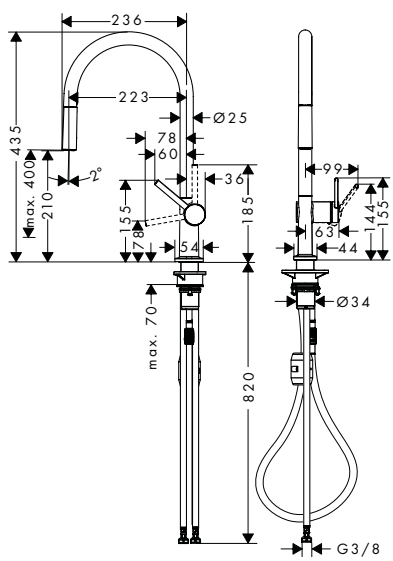

- ComfortZone 210
- swivel range adjustable in 4 steps 60°, 110°, 150° or 360°
- normal spray
- quick connect hose
- connection dimension: DN15
- maximum flow rate at 3 bar: 7 l/min
- ceramic cartridge
- connection type: G ⅜ connections
- temperature limitation adjustable
- integrated non-return valve
- suitable for continuous flow water heaters

Measurements within scale drawings are in mm.

Technical specifications and units of measure are subject to change.

	finish	code no.	Euro
Talis M54 Single lever kitchen mixer 210, pull-out spout, 1jet, sBox	Chrome	72803000	326.40
	Matt Black	72803670	424.80
	Stainless Steel Finish	72803800	424.80

Pull-out · AirPower · Comfort Zone · sBox Kitchen · Quick Clean



- consists of: single lever kitchen mixer, hose box
- ComfortZone 210
- swivel range adjustable in 4 steps 60°, 110°, 150° or 360°
- normal spray
- connection dimension: DN15
- maximum flow rate at 3 bar: 7 l/min
- ceramic cartridge
- connection type: G ⅜ connections
- temperature limitation adjustable
- integrated non-return valve
- suitable for continuous flow water heaters
- sBox for quiet, smooth and protected hose guidance in the cabinet, under the countertop
- extension length up to 76 cm

Talis M54 Single lever kitchen mixer 220, 1jet	Chrome	72804000	219.40
	Matt Black	72804670	285.70
	Stainless Steel Finish	72804800	285.70

Comfort Zone · Quick Clean

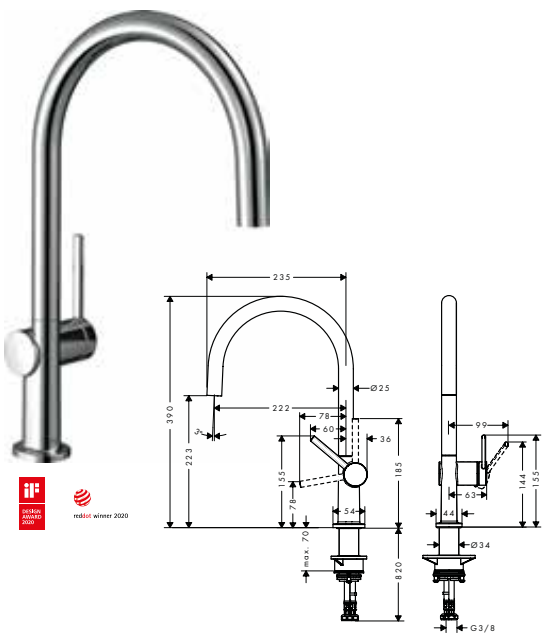

- ComfortZone 220
- swivel range adjustable in 4 steps 60°, 110°, 150° or 360°
- laminar spray
- connection dimension: DN15
- maximum flow rate at 3 bar: 9 l/min
- ceramic cartridge
- connection type: G ⅜ connections
- temperature limitation adjustable
- suitable for continuous flow water heaters
- tap hole with Ø 35 mm required

Alternative products:

· **Talis M54** Single lever kitchen mixer 220, Eco, 1jet	Chrome	72843000	219.40
	Matt Black	72843670	285.10

Talis M54 Single lever kitchen mixer 220, device shut-off valve, 1jet	Chrome	72805000	267.50
	Matt Black	72805670	347.80
	Stainless Steel Finish	72805800	347.80

Comfort Zone · Quick Clean

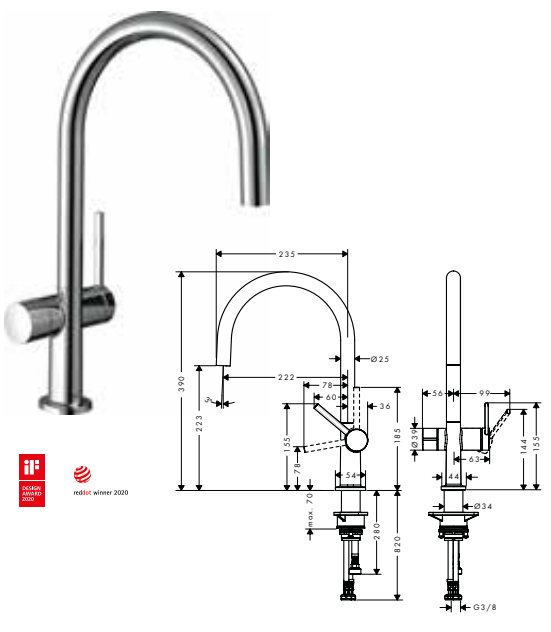

- ComfortZone 220
- swivel range adjustable in 4 steps 60°, 110°, 150° or 360°
- laminar spray
- with integrated shut-off valve
- connection dimension: DN15
- maximum flow rate at 3 bar: 9 l/min
- ceramic cartridge
- connection type: G ⅜ connections
- temperature limitation adjustable
- suitable for continuous flow water heaters
- tap hole with Ø 35 mm required

Measurements within scale drawings are in mm.

Technical specifications and units of measure are subject to change.

	finish	code no.	Euro

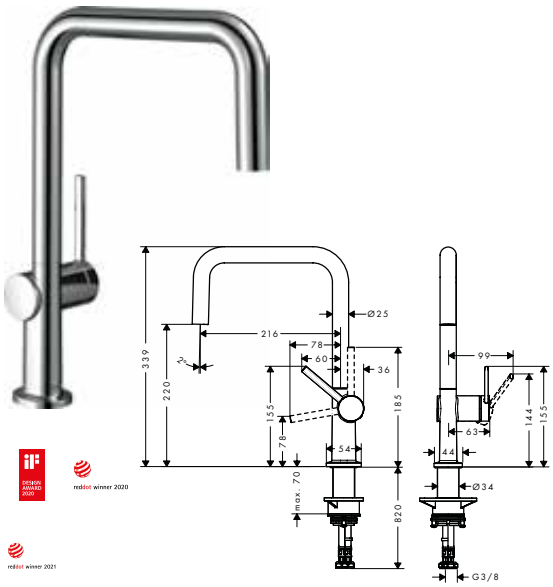

Talis M54 Single lever kitchen mixer U 220, 1jet

- ComfortZone 220
- swivel range adjustable in 4 steps 60°, 110°, 150° or 360°
- laminar spray
- connection dimension: DN15
- maximum flow rate at 3 bar: 9 l/min
- ceramic cartridge
- connection type: G ⅜ connections
- temperature limitation adjustable
- suitable for continuous flow water heaters

finish	code no.	Euro
Chrome	72806000	192.60
Matt Black	72806670	250.40
Stainless Steel Finish	72806800	250.40

Alternative products:

- **Talis M54** Single lever kitchen mixer U 220, Eco, 1jet

Chrome	72844000	192.60
Matt Black	72844670	250.40

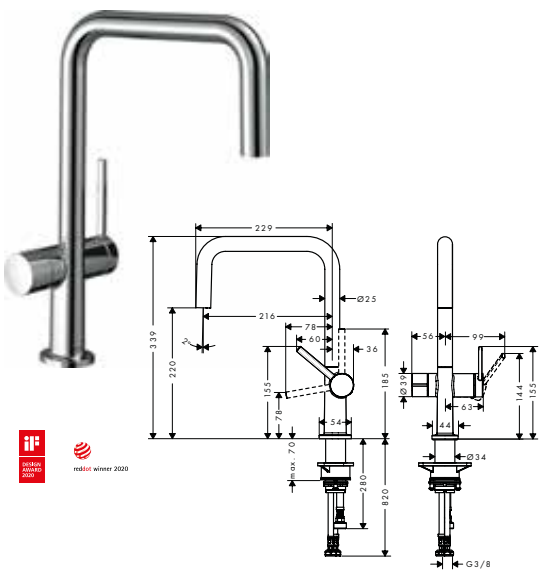

Talis M54 Single lever kitchen mixer U 220, device shut-off valve, 1jet

- ComfortZone 220
- swivel range adjustable in 4 steps 60°, 110°, 150° or 360°
- laminar spray
- with integrated shut-off valve
- device connection DN20
- connection dimension: DN15
- maximum flow rate at 3 bar: 8 l/min
- ceramic cartridge
- connection type: G ⅜ connections
- temperature limitation adjustable
- suitable for continuous flow water heaters
- tap hole with Ø 35 mm required

Chrome	72807000	240.80
Matt Black	72807670	312.90
Stainless Steel Finish	72807800	312.90

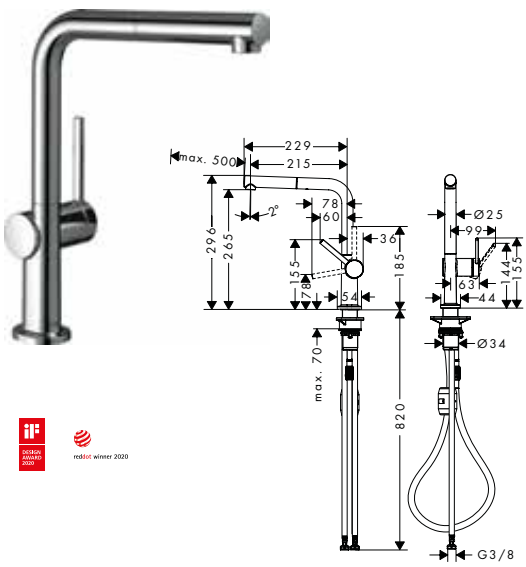

Talis M54 Single lever kitchen mixer 270, pull-out spout, 1jet

- ComfortZone 270
- swivel range adjustable in 4 steps 60°, 110°, 150° or 360°
- laminar spray
- quick connect hose
- connection dimension: DN15
- maximum flow rate at 3 bar: 8 l/min
- ceramic cartridge
- connection type: G ⅜ connections
- temperature limitation adjustable
- integrated non-return valve
- suitable for continuous flow water heaters

Chrome	72808000	219.40
Matt Black	72808670	285.70
Stainless Steel Finish	72808800	285.70

Alternative products:

- **Talis M54** Single lever kitchen mixer 270, Eco, pull-out spout, 1jet

Chrome	72845000	219.40
Matt Black	72845670	285.10

Measurements within scale drawings are in mm.

Technical specifications and units of measure are subject to change.

	finish	code no.	Euro
Talis M54 Single lever kitchen mixer 270, pull-out spout, 1jet, sBox	Chrome	72809000	272.90
	Matt Black	72809670	355.20
	Stainless Steel Finish	72809800	355.20

Pull-out · Comfort Zone · sBox Kitchen · Quick Clean

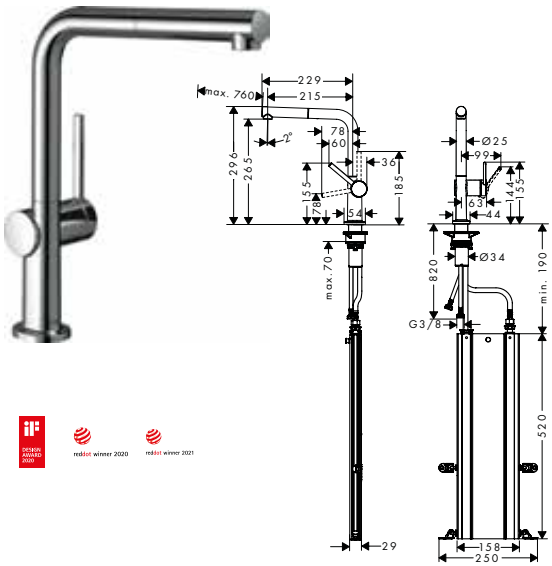

- consists of: single lever kitchen mixer, hose box
- ComfortZone 270
- l-spout
- swivel range adjustable in 4 steps 60°, 110°, 150° or 360°
- laminar spray
- connection dimension: DN15
- maximum flow rate at 3 bar: 7 l/min
- ceramic cartridge
- connection type: G ⅜ connections
- temperature limitation adjustable
- integrated non-return valve
- suitable for continuous flow water heaters
- sBox for quiet, smooth and protected hose guidance in the cabinet, under the countertop
- extension length up to 76 cm

Talis M54 Single lever kitchen mixer 270, 1jet	Chrome	72840000	187.30
	Matt Black	72840670	244.00
	Stainless Steel Finish	72840800	244.00

Comfort Zone · Quick Clean

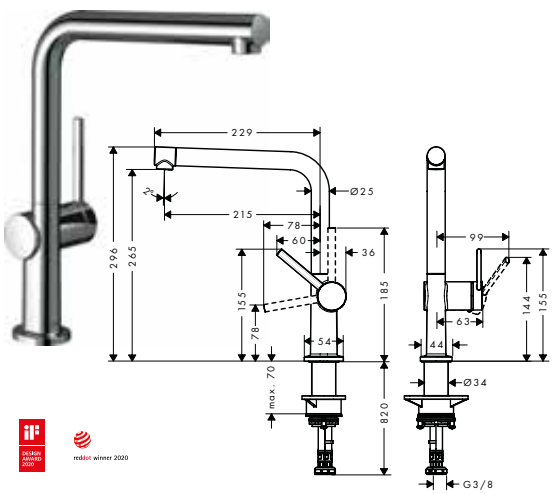

- ComfortZone 270
- l-spout
- swivel range adjustable in 4 steps 60°, 110°, 150° or 360°
- laminar spray
- connection dimension: DN15
- maximum flow rate at 3 bar: 8,4 l/min
- ceramic cartridge
- connection type: G ⅜ connections
- temperature limitation adjustable
- suitable for continuous flow water heaters
- tap hole with Ø 35 mm required

Talis M54 Single lever kitchen mixer 270, device shut-off valve, 1jet	Chrome	72827000	240.80
	Matt Black	72827670	312.90
	Stainless Steel Finish	72827800	312.90

Comfort Zone · Quick Clean

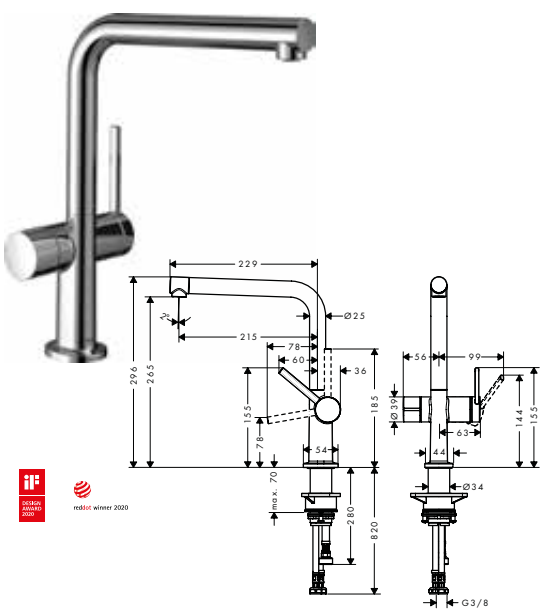

- ComfortZone 270
- swivel range adjustable in 4 steps 60°, 110°, 150° or 360°
- laminar spray
- with integrated shut-off valve
- connection dimension: DN15
- maximum flow rate at 3 bar: 8 l/min
- ceramic cartridge
- connection type: G ⅜ connections
- temperature limitation adjustable
- suitable for continuous flow water heaters
- tap hole with Ø 35 mm required

Measurements within scale drawings are in mm.

Technical specifications and units of measure are subject to change.

Cento XXL



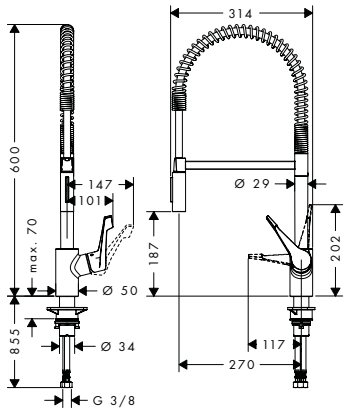

	finish	code no.	Euro
Cento Single lever kitchen mixer XXL, Semi-Pro, 2jet	Chrome	14806000	387.40

EcoSmart · Quick Clean

- swivel range 360°
- normal spray, shower spray
- lockable shower spray, spray returns through pressing spray diverter
- connection dimension: DN15
- maximum flow rate at 3 bar: 11 l/min
- ceramic cartridge with Eco handle position for a reduced flowrate by up to 50%
- connection type: G ⅜ connections
- temperature limitation adjustable
- integrated non-return valve
- suitable for continuous flow water heaters

Focus M41



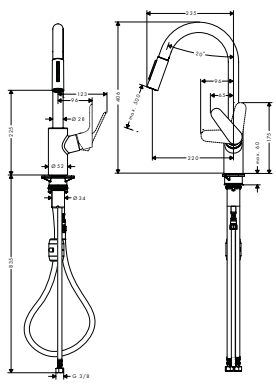

Focus M41 Single lever kitchen mixer 240, pull-out spray, 2jet	Chrome	31815000	272.90
	Matt Black	31815670	382.00
	Stainless Steel Finish	31815800	354.90

Pull-out · Comfort Zone · Quick Clean

- ComfortZone 240
- swivel range adjustable in 2 steps to 110° or 150°
- laminar spray, shower spray
- lockable shower spray, spray returns through pressing spray diverter
- MagFit magnetic shower support
- quick connect hose
- connection dimension: DN15
- maximum flow rate at 3 bar: 10 l/min
- ceramic cartridge
- connection type: G ⅜ connections
- temperature limitation adjustable
- integrated non-return valve
- suitable for continuous flow water heaters

Alternative products:

Focus M41 Single lever kitchen mixer 240, Eco, pull-out spray, 2jet	Chrome	31833000	272.90



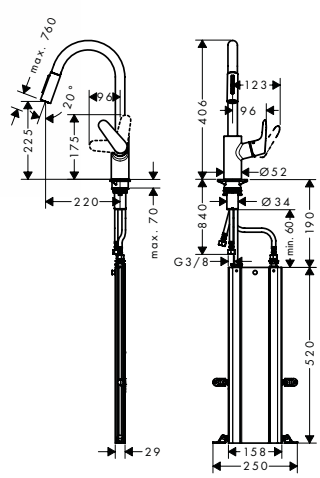

Focus M41 Single lever kitchen mixer 240, pull-out spray, 2jet, sBox	Chrome	73880000	325.40
	Stainless Steel Finish	73880800	405.00

Pull-out · Comfort Zone · sBox Kitchen · Quick Clean

- consists of: single lever kitchen mixer, hose box
- ComfortZone 240
- swivel range adjustable in 2 steps to 110° or 150°
- laminar spray, shower spray
- lockable shower spray, spray returns through pressing spray diverter
- MagFit magnetic shower support
- connection dimension: DN15
- maximum flow rate at 3 bar: 10 l/min
- ceramic cartridge
- connection type: G ⅜ connections
- temperature limitation adjustable
- integrated non-return valve
- suitable for continuous flow water heaters
- sBox for quiet, smooth and protected hose guidance in the cabinet, under the countertop
- extension length up to 76 cm

Alternative products:

Focus M41 Single lever kitchen mixer 240, Eco, pull-out spray, 2jet, sBox	Chrome	73895000	325.40

Measurements within scale drawings are in mm.

Technical specifications and units of measure are subject to change.

	finish	code no.	Euro
Focus M41 Single lever kitchen mixer 280, 1jet	Chrome	31817000	210.40
	Matt Black	31817670	294.70
	Stainless Steel Finish	31817800	274.10



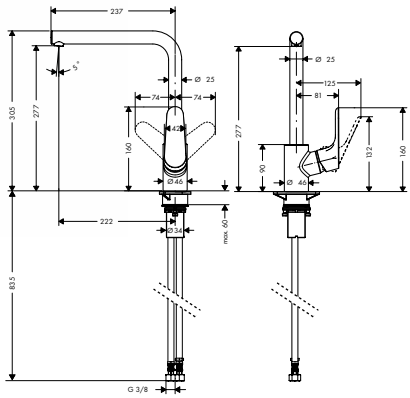

- handle can be positioned on the right or left
- ComfortZone 280
- swivel range adjustable in 3 steps 110°, 150° or 360°
- normal spray
- connection dimension: DN15
- maximum flow rate at 3 bar: 12 l/min
- ceramic cartridge
- connection type: G ⅜ connections
- temperature limitation adjustable
- suitable for continuous flow water heaters

Alternative products:

· **Focus M41** Single lever kitchen mixer 280, Eco, 1jet	Chrome	31827000	210.40

	finish	code no.	Euro
Focus M41 Single lever kitchen mixer 260, 1jet	Chrome	31820000	183.60
	Matt Black	31820670	257.00
	Stainless Steel Finish	31820800	239.50



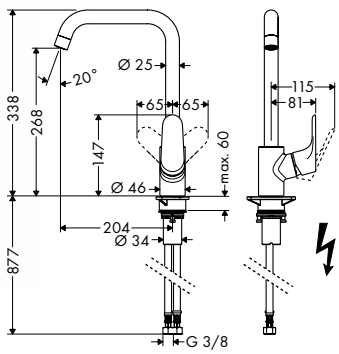

- handle can be positioned on the right or left
- ComfortZone 260
- swivel range adjustable in 3 steps 110°, 150° or 360°
- normal spray
- connection dimension: DN15
- maximum flow rate at 3 bar: 12 l/min
- ceramic cartridge
- connection type: G ⅜ connections
- temperature limitation adjustable
- suitable for continuous flow water heaters

Alternative products:

· **Focus M41** Single lever kitchen mixer 260, LowPressure/vented hot water cylinders, 1jet	Chrome	31822000	202.70
· **Focus M41** Single lever kitchen mixer 260, Eco, 1jet	Chrome	31821000	183.60
	Stainless Steel Finish	31821800	239.50

Focus M41 Single lever kitchen mixer 260, device shut-off valve, 1jet	Chrome	31823000	300.80



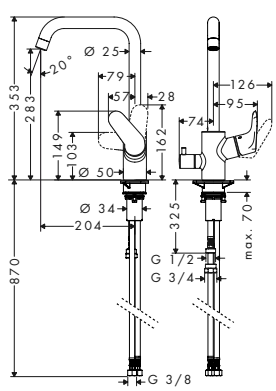

- handle can be positioned on the right or left
- ComfortZone 260
- swivel range adjustable in 3 steps 110°, 150° or 360°
- normal spray
- with integrated shut-off valve
- connection dimension: DN15
- maximum flow rate at 3 bar: 12 l/min
- ceramic cartridge
- connection type: G ⅜ connections
- temperature limitation adjustable
- suitable for continuous flow water heaters

Measurements within scale drawings are in mm.

Technical specifications and units of measure are subject to change.

	finish	code no.	Euro

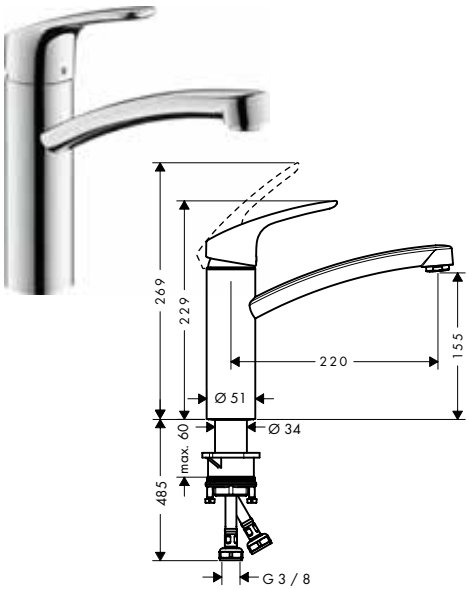

Focus M41 Single lever kitchen mixer 160, 1jet

- ComfortZone 160
- swivel range 360°
- normal spray
- connection dimension: DN15
- maximum flow rate at 3 bar: 12 l/min
- ceramic cartridge
- connection type: G ⅜ connections
- temperature limitation adjustable
- suitable for continuous flow water heaters

	finish	code no.	Euro
	Chrome	31806000	129.60
	Stainless Steel Finish	31806800	168.30

Alternative products:

Focus M41 Single lever kitchen mixer 160, CoolStart, EcoSmart, 1jet	Chrome	31816000	133.70
Focus M41 Single lever kitchen mixer 160, Eco, 1jet	Chrome	31826000	129.60
Focus M41 Single lever kitchen mixer 160, LowPressure/vented hot water cylinders, 1jet	Chrome	31804000	146.10

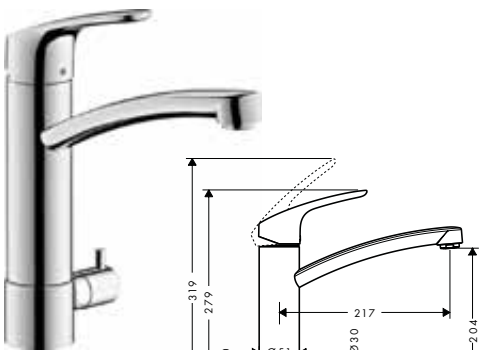

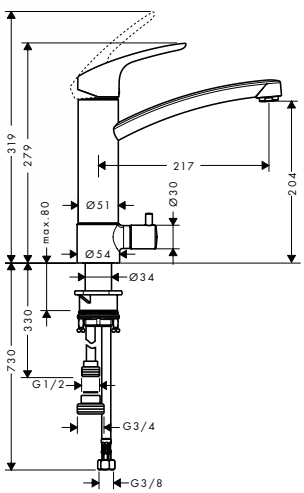

Focus M41 Single lever kitchen mixer 200, device shut-off valve, 1jet

- ComfortZone 200
- swivel range 120°
- normal spray
- with integrated shut-off valve
- connection dimension: DN15
- maximum flow rate at 3 bar: 12 l/min
- ceramic cartridge
- connection type: G ⅜ connections
- temperature limitation adjustable
- suitable for continuous flow water heaters

	finish	code no.	Euro
	Chrome	31803000	300.70



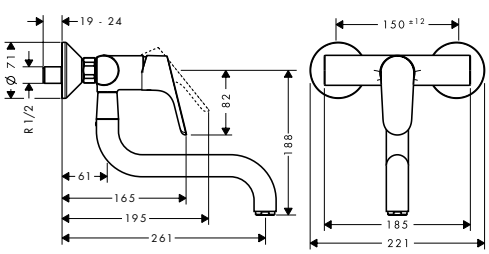

Focus M41 Single lever kitchen mixer, wall-mounted lowspout, 1jet

- swivel range 180°
- normal spray
- centre distance 150 ± 12 mm
- connection dimension: DN15
- maximum flow rate at 3 bar: 12 l/min
- ceramic cartridge
- connection type: s-shaped connections
- temperature limitation adjustable
- suitable for continuous flow water heaters

	finish	code no.	Euro
	Chrome	31825000	174.80

Measurements within scale drawings are in mm.

Technical specifications and units of measure are subject to change.

Focus M42

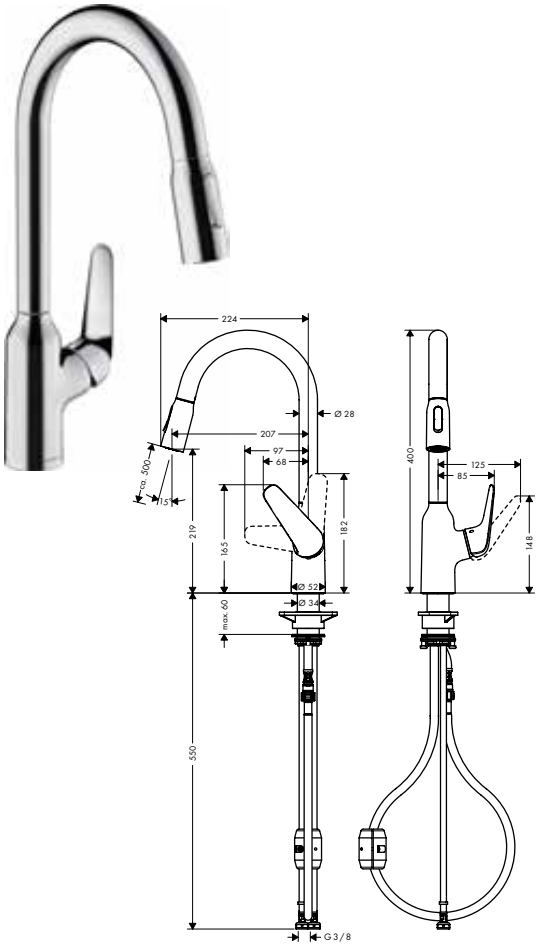

Focus M42 Single lever kitchen mixer 220, pull-out spray, 2jet

- ComfortZone 220
- swivel range 360°
- laminar spray, shower spray
- lockable shower spray, spray returns through pressing spray diverter and spray returns automatically through handle closing
- MagFit magnetic shower support
- quick connect hose
- connection dimension: DN15
- maximum flow rate at 3 bar: 8 l/min
- ceramic cartridge
- connection type: G ⅜ connections
- temperature limitation adjustable
- integrated non-return valve
- suitable for continuous flow water heaters

finish	code no.	Euro
Chrome	71800000	288.60
Stainless Steel Finish	71800800	375.10

Pull-out · Comfort Zone · Quick Clean

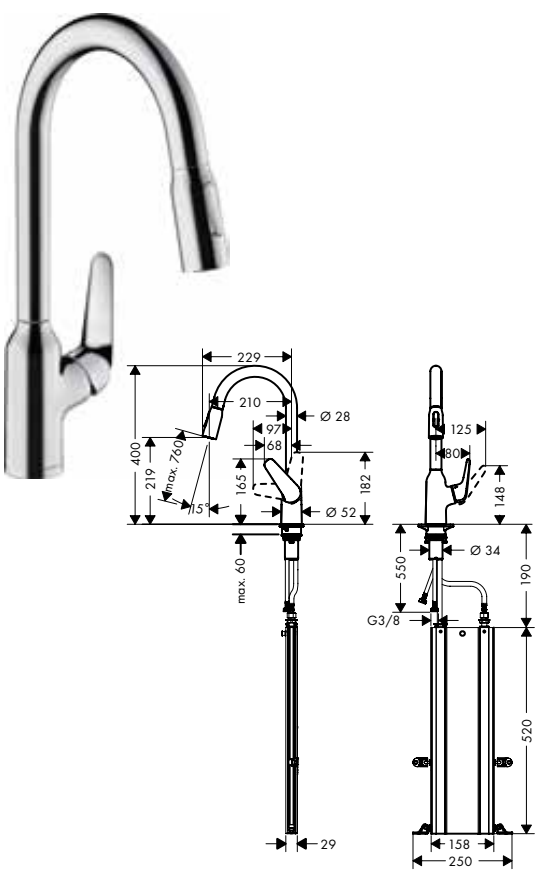

Focus M42 Single lever kitchen mixer 220, pull-out spray, 2jet, sBox

- consists of: single lever kitchen mixer, hose box
- ComfortZone 220
- swivel range 360°
- laminar spray, shower spray
- lockable shower spray, spray returns through pressing spray diverter and spray returns automatically through handle closing
- MagFit magnetic shower support
- connection dimension: DN15
- maximum flow rate at 3 bar: 9 l/min
- ceramic cartridge
- connection type: G ⅜ connections
- temperature limitation adjustable
- integrated non-return valve
- suitable for continuous flow water heaters
- sBox for quiet, smooth and protected hose guidance in the cabinet, under the countertop
- extension length up to 76 cm

Chrome	71820000	346.40
Stainless Steel Finish	71820800	432.90

Pull-out · Comfort Zone · sBox Kitchen · Quick Clean

Measurements within scale drawings are in mm.

Technical specifications and units of measure are subject to change.

	finish	code no.	Euro



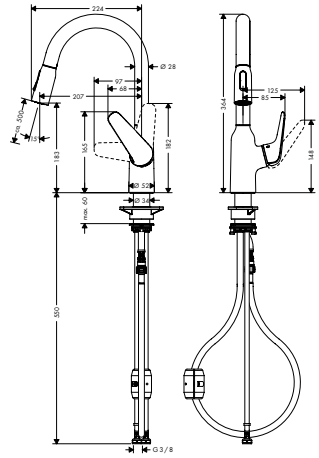

Focus M42 Single lever kitchen mixer 180, pull-out spray, 2jet

- ComfortZone 180
- swivel range 360°
- laminar spray, shower spray
- lockable shower spray, spray returns through pressing spray diverter and spray returns automatically through handle closing
- MagFit magnetic shower support
- quick connect hose
- connection dimension: DN15
- maximum flow rate at 3 bar: 8 l/min
- ceramic cartridge
- connection type: G ⅜ connections
- temperature limitation adjustable
- integrated non-return valve
- suitable for continuous flow water heaters

Chrome		71801000	255.30
Stainless Steel Finish		71801800	331.90

Pull-out · Comfort Zone · Quick Clean

Alternative products:

- **Focus M42** Single lever kitchen mixer 180, Eco, pull-out spray, 2jet — Chrome — 71862000 — 255.30



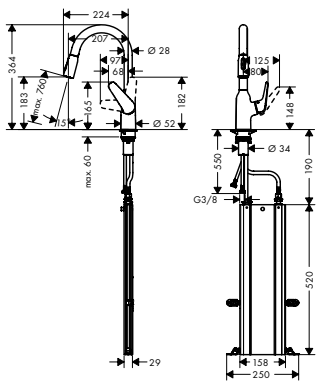

Focus M42 Single lever kitchen mixer 180, pull-out spray, 2jet, sBox

- consists of: single lever kitchen mixer, hose box
- ComfortZone 180
- swivel range 360°
- laminar spray, shower spray
- lockable shower spray, spray returns through pressing spray diverter and spray returns automatically through handle closing
- MagFit magnetic shower support
- connection dimension: DN15
- maximum flow rate at 3 bar: 9 l/min
- ceramic cartridge
- connection type: G ⅜ connections
- temperature limitation adjustable
- integrated non-return valve
- suitable for continuous flow water heaters
- sBox for quiet, smooth and protected hose guidance in the cabinet, under the countertop
- extension length up to 76 cm

Chrome		71821000	313.00
Stainless Steel Finish		71821800	389.60

Pull-out · Comfort Zone · sBox Kitchen · Quick Clean



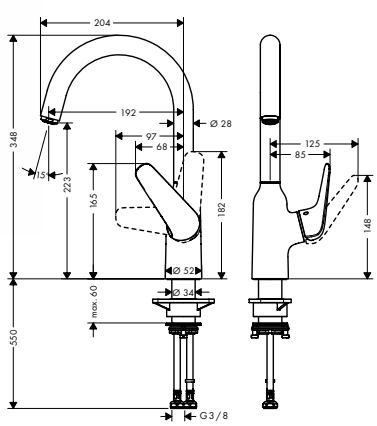

Focus M42 Single lever kitchen mixer 220, 1jet

- ComfortZone 220
- swivel range 360°
- normal spray
- connection dimension: DN15
- maximum flow rate at 3 bar: 10 l/min
- ceramic cartridge
- connection type: G ⅜ connections
- temperature limitation adjustable
- suitable for continuous flow water heaters

Chrome		71802000	183.20
Stainless Steel Finish		71802800	238.10

AirPower · Comfort Zone · Quick Clean

Measurements within scale drawings are in mm.

Technical specifications and units of measure are subject to change.

	finish	code no.	Euro

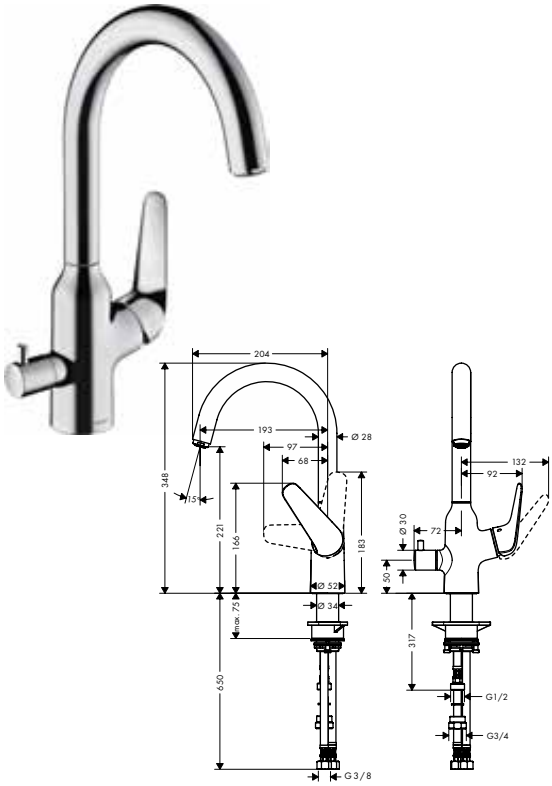

Focus M42 Single lever kitchen mixer 220, device shut-off valve, 1jet

Chrome 71803000 288.60

AirPower · Comfort Zone · Quick Clean

- ComfortZone 220
- swivel range adjustable in 2 steps 110° or 360°
- normal spray
- with integrated shut-off valve
- connection dimension: DN15
- maximum flow rate at 3 bar: 10 l/min
- ceramic cartridge
- connection type: G ⅜ connections
- temperature limitation adjustable
- suitable for continuous flow water heaters

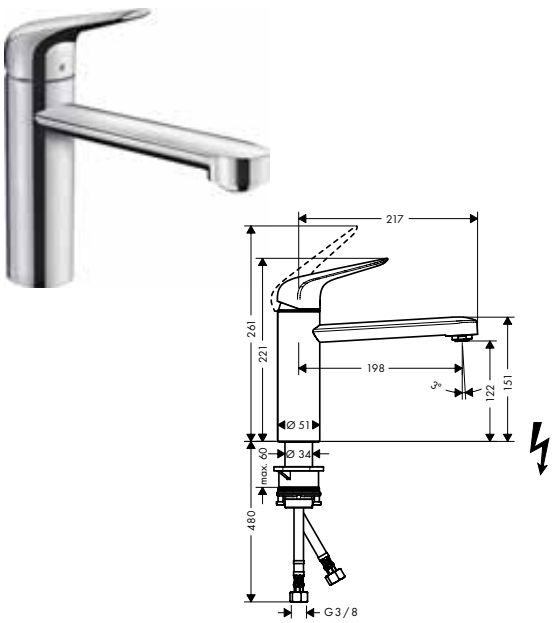

Focus M42 Single lever kitchen mixer 120, 1jet

Chrome 71806000 133.20
Stainless Steel Finish 71806800 173.10

AirPower · Comfort Zone · Quick Clean

- ComfortZone 120
- swivel range 360°
- normal spray
- connection dimension: DN15
- maximum flow rate at 3 bar: 12 l/min
- ceramic cartridge
- connection type: G ⅜ connections
- temperature limitation adjustable
- suitable for continuous flow water heaters

Alternative products:

- **Focus M42** Single lever kitchen mixer 120, CoolStart, EcoSmart, 1jet — Chrome 71805000 133.20
- **Focus M42** Single lever kitchen mixer 120, CoolStart, Eco, 1jet — Chrome 71864000 133.20
- **Focus M42** Single lever kitchen mixer 120, LowPressure/vented hot water cylinders, 1jet — Chrome 71804000 144.20

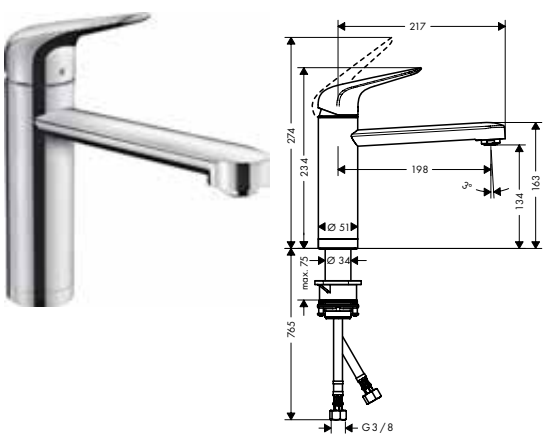

Focus M42 Single lever kitchen mixer 120, installation in front of a window, 1jet

Chrome 71807000 166.50

AirPower · Comfort Zone · Quick Clean · Tilt Function

- ComfortZone 120
- swivel range 360°
- installation in front of the window, can be laid flat, base height 51 mm
- normal spray
- connection dimension: DN15
- maximum flow rate at 3 bar: 12 l/min
- ceramic cartridge
- connection type: G ⅜ connections
- temperature limitation adjustable
- suitable for continuous flow water heaters

Measurements within scale drawings are in mm.

Technical specifications and units of measure are subject to change.

	finish	code no.	Euro



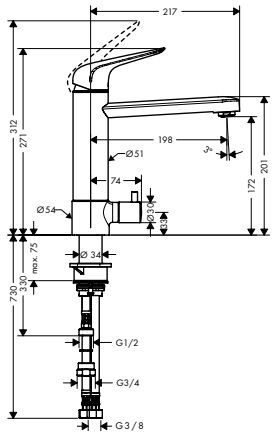

Focus M42 Single lever kitchen mixer 180, device shut-off valve, 1jet

- ComfortZone 180
- swivel range adjustable in 2 steps 120° or 360°
- normal spray
- with integrated shut-off valve
- connection dimension: DN15
- maximum flow rate at 3 bar: 12 l/min
- ceramic cartridge
- connection type: G ⅜ connections
- temperature limitation adjustable
- suitable for continuous flow water heaters

Chrome 71813000 272.00

AirPower · Comfort Zone · Quick Clean



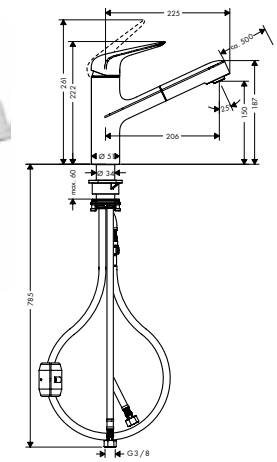

Focus M42 Single lever kitchen mixer 150, pull-out spout, 1jet

- ComfortZone 150
- swivel range 120°
- normal spray
- MagFit magnetic shower support
- quick connect hose
- connection dimension: DN15
- maximum flow rate at 3 bar: 8 l/min
- ceramic cartridge
- connection type: G ⅜ connections
- temperature limitation adjustable
- integrated non-return valve
- suitable for continuous flow water heaters

Chrome 71814000 183.20
Stainless Steel Finish 71814800 238.10

Pull-out · AirPower · Comfort Zone · Quick Clean

Alternative products:

- **Focus M42** Single lever kitchen mixer 150, Eco, pull-out spout, 1jet — Chrome 71865000 183.20



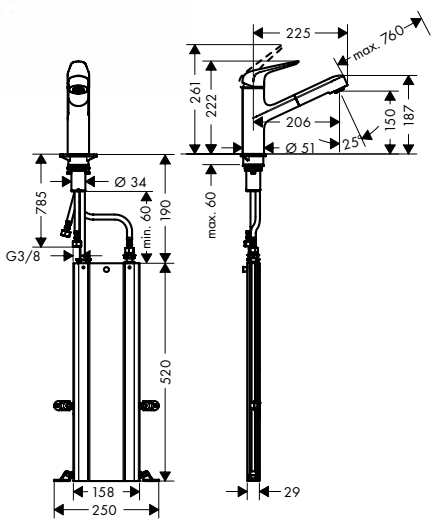

Focus M42 Single lever kitchen mixer 150, pull-out spout, 1jet, sBox

- consists of: single lever kitchen mixer, hose box
- ComfortZone 150
- swivel range 120°
- normal spray
- MagFit magnetic shower support
- connection dimension: DN15
- maximum flow rate at 3 bar: 8 l/min
- ceramic cartridge
- connection type: G ⅜ connections
- temperature limitation adjustable
- integrated non-return valve
- suitable for continuous flow water heaters
- sBox for quiet, smooth and protected hose guidance in the cabinet, under the countertop
- extension length up to 76 cm

Chrome 71829000 240.90
Stainless Steel Finish 71829800 295.80

Pull-out · AirPower · Comfort Zone · sBox Kitchen · Quick Clean

Measurements within scale drawings are in mm.

Technical specifications and units of measure are subject to change.

	finish	code no.	Euro



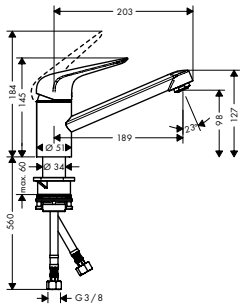

Focus M42 Single lever kitchen mixer 100, 1jet

- ComfortZone 100
- swivel range 360°
- normal spray
- connection dimension: DN15
- maximum flow rate at 3 bar: 12 l/min
- ceramic cartridge
- connection type: G ⅜ connections
- temperature limitation adjustable
- suitable for continuous flow water heaters

	finish	code no.	Euro
	Chrome	71808000	111.00
	Stainless Steel Finish	71808800	144.20

AirPower · Comfort Zone · Quick Clean

Alternative products:

	finish	code no.	Euro
· **Focus M42** Single lever kitchen mixer 100, CoolStart, EcoSmart, 1jet	Chrome	71809000	111.00
· **Focus M42** Single lever kitchen mixer 100, CoolStart, Eco, 1jet	Chrome	71866000	111.00

Zesis M33

NEW



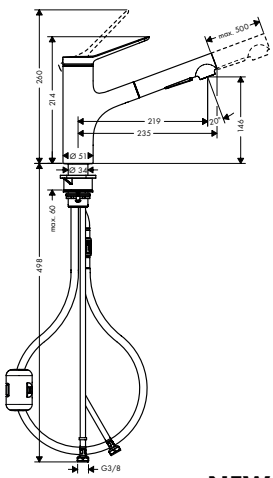

Zesis M33 Single lever kitchen mixer 150, pull-out spray, 2jet

- ComfortZone 150
- swivel range 150°
- laminar spray, shower spray
- lockable shower spray, spray returns through pressing spray diverter and spray returns automatically through handle closing
- quick connect hose
- connection dimension: DN15
- maximum flow rate at 3 bar: 8,2 l/min
- ceramic cartridge
- connection type: G ⅜ connections
- temperature limitation adjustable
- integrated non-return valve
- suitable for continuous flow water heaters

	finish	code no.	Euro
	Chrome	74800000	160.00
	Matt Black	74800670	220.00
	Stainless Steel Finish	74800800	210.00

Pull-out · Comfort Zone · Quick Clean

Alternative products:

	finish	code no.	Euro
NEW · **Zesis M33** Single lever kitchen mixer 150, pull-out spray, 2jet, sBox lite	Chrome	74803000	180.00
	Matt Black	74803670	240.00
	Stainless Steel Finish	74803800	230.00
NEW · **Zesis M33** Single lever kitchen mixer 150, Eco, pull-out spray, 2jet	Chrome	74810000	160.00

NEW



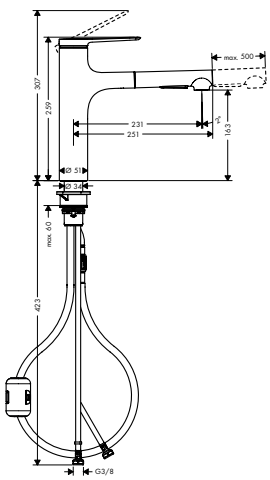

Zesis M33 Single lever kitchen mixer 160, pull-out spray, 2jet

- ComfortZone 160
- swivel range 150°
- laminar spray, shower spray
- lockable shower spray, spray returns through pressing spray diverter and spray returns automatically through handle closing
- MagFit magnetic shower support
- quick connect hose
- connection dimension: DN15
- maximum flow rate at 3 bar: 8,2 l/min
- ceramic cartridge
- connection type: G ⅜ connections
- temperature limitation adjustable
- integrated non-return valve
- suitable for continuous flow water heaters

	finish	code no.	Euro
	Chrome	74801000	230.00
	Matt Black	74801670	320.00
	Stainless Steel Finish	74801800	300.00

Pull-out · Comfort Zone · Quick Clean

Alternative products:

	finish	code no.	Euro
NEW · **Zesis M33** Single lever kitchen mixer, 160, pull-out spray, 2jet, sBox lite	Chrome	74804000	250.00
	Matt Black	74804670	340.00
	Stainless Steel Finish	74804800	320.00

Measurements within scale drawings are in mm.

	finish	code no.	Euro

NEW



Zesis M33 Single lever kitchen mixer 150, 1jet

- ComfortZone 150
- swivel range adjustable in 3 steps 60°, 110° or 360°
- normal spray
- connection dimension: DN15
- maximum flow rate at 3 bar: 11,6 l/min
- ceramic cartridge
- connection type: G ⅜ connections
- temperature limitation adjustable
- suitable for continuous flow water heaters

Chrome	74802000	115.00
Matt Black	74802670	160.00
Stainless Steel Finish	74802800	150.00

AirPower · Comfort Zone · Quick Clean

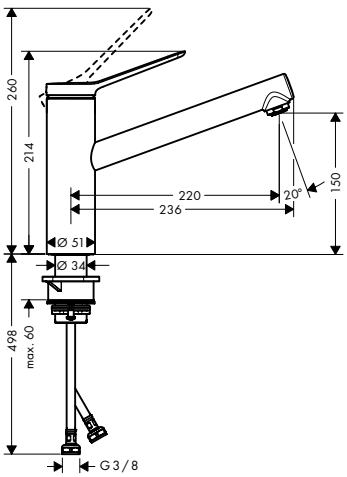

Alternative products:

NEW
- **Zesis M33** Single lever kitchen mixer 150, Eco, 1jet — Chrome — 74811000 — 115.00

NEW
- **Zesis M33** Single lever kitchen mixer 150, LowPressure/vented hot water cylinders, 1jet — Chrome — 74806000 — 140.00

NEW
- **Zesis M33** Single lever kitchen mixer 150, CoolStart, EcoSmart, 1jet — Chrome — 74813000 — 115.00

NEW



Zesis M33 Single lever kitchen mixer 150, pull-out spray, 2jet, sBox lite

- ComfortZone 150
- swivel range 150°
- laminar spray, shower spray
- lockable shower spray, spray returns through pressing spray diverter and spray returns automatically through handle closing
- quick connect hose
- connection dimension: DN15
- maximum flow rate at 3 bar: 8,2 l/min
- ceramic cartridge
- connection type: G ⅜ connections
- temperature limitation adjustable
- integrated non-return valve
- suitable for continuous flow water heaters
- sBox lite for a smooth, flexible and safe hose guidance in the cabinet
- extension length up to 50 cm

Chrome	74803000	180.00
Matt Black	74803670	240.00
Stainless Steel Finish	74803800	230.00

Pull-out · Comfort Zone · Quick Clean

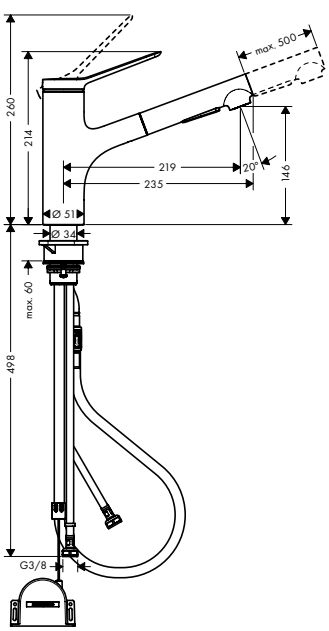

Alternative products:

NEW
- **Zesis M33** Single lever kitchen mixer 150, pull-out spray, 2jet — Chrome — 74800000 — 160.00; Matt Black — 74800670 — 220.00; Stainless Steel Finish — 74800800 — 210.00

Measurements within scale drawings are in mm.

Technical specifications and units of measure are subject to change.

	finish	code no.	Euro
Zesis M33 Single lever kitchen mixer, 160, pull-out spray, 2jet, sBox lite	Chrome	74804000	250.00
	Matt Black	74804670	340.00
	Stainless Steel Finish	74804800	320.00

Pull-out · Comfort Zone · Quick Clean

NEW



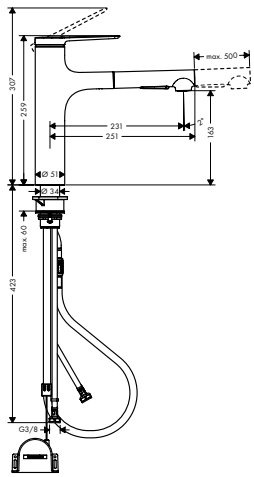

- ComfortZone 160
- swivel range 150°
- laminar spray, shower spray
- lockable shower spray, spray returns through pressing spray diverter and spray returns automatically through handle closing
- MagFit magnetic shower support
- quick connect hose
- connection dimension: DN15
- maximum flow rate at 3 bar: 8,2 l/min
- ceramic cartridge
- connection type: G ⅜ connections
- temperature limitation adjustable
- integrated non-return valve
- suitable for continuous flow water heaters
- sBox lite for a smooth, flexible and safe hose guidance in the cabinet
- extension length up to 50 cm

Alternative products:

NEW

· **Zesis M33** Single lever kitchen mixer 160, pull-out spray, 2jet	Chrome	74801000	230.00
	Matt Black	74801670	320.00
	Stainless Steel Finish	74801800	300.00

Zesis M33 Single lever kitchen mixer 160, installation in front of a window, 1jet	Chrome	74805000	155.00

AirPower · Comfort Zone · Quick Clean · Tilt Function

NEW



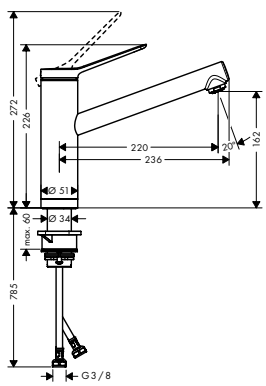

- ComfortZone 160
- swivel range 150°
- installation in front of the window, can be laid flat, base height 51 mm
- normal spray
- connection dimension: DN15
- maximum flow rate at 3 bar: 11,6 l/min
- ceramic cartridge
- connection type: G ⅜ connections
- temperature limitation adjustable
- suitable for continuous flow water heaters

Zesis M33 Single lever kitchen mixer 200, device shut-off valve, 1jet	Chrome	74808000	220.00

AirPower · Comfort Zone · Quick Clean

NEW



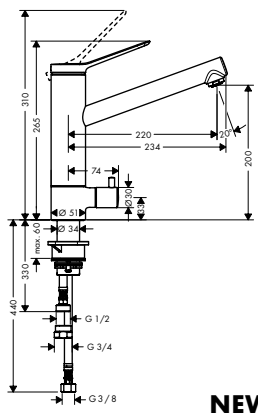

- ComfortZone 200
- swivel range adjustable in 2 steps 60° or 110°
- normal spray
- with integrated shut-off valve
- connection dimension: DN15
- maximum flow rate at 3 bar: 11,4 l/min
- ceramic cartridge
- connection type: G ⅜ connections
- temperature limitation adjustable
- suitable for continuous flow water heaters

Alternative products:

NEW

· **Zesis M33** Single lever kitchen mixer 200, device shut-off valve, CoolStart, 1jet	Chrome	74807000	220.00

Logis M31

	finish	code no.	Euro



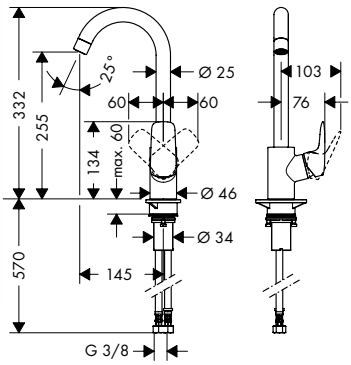

Logis M31 Single lever kitchen mixer 260, 1jet — Chrome — 71835000 — 148.80

- handle can be positioned on the right or left
- ComfortZone 260
- swivel range adjustable in 3 steps 110°, 150° or 360°
- normal spray
- connection dimension: DN15
- maximum flow rate at 3 bar: 12 l/min
- ceramic cartridge
- connection type: G ⅜ connections
- temperature limitation adjustable
- suitable for continuous flow water heaters

Alternative products:

- **Logis M31** Single lever kitchen mixer 260, Eco, 1jet — Chrome — 71861000 — 148.80



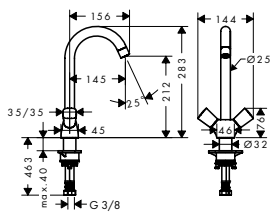

Logis M31 2-handle kitchen mixer 220, 1jet — Chrome — 71280000 — 130.40

- ComfortZone 220
- swivel range adjustable in 3 steps 110°, 150° or 360°
- normal spray
- connection dimension: DN15
- maximum flow rate at 3 bar: 12 l/min
- ceramic valves hot/ cold 90°
- connection type: G ⅜ connections
- suitable for continuous flow water heaters



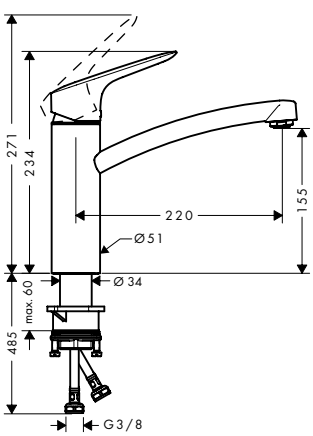

Logis M31 Single lever kitchen mixer 160, 1jet — Chrome — 71832000 — 115.30

- ComfortZone 160
- swivel range 360°
- normal spray
- connection dimension: DN15
- maximum flow rate at 3 bar: 12 l/min
- ceramic cartridge
- connection type: G ⅜ connections
- temperature limitation adjustable
- suitable for continuous flow water heaters

Alternative products:

- **Logis M31** Single lever kitchen mixer 160, installation in front of a window, 1jet — Chrome — 71833000 — 147.70
- **Logis M31** Single lever kitchen mixer 160, Eco, 1jet — Chrome — 71860000 — 115.30
- **Logis M31** Single lever kitchen mixer 160, CoolStart, EcoSmart, 1jet — Chrome — 71839000 — 115.30

Measurements within scale drawings are in mm.

Technical specifications and units of measure are subject to change.

	finish	code no.	Euro



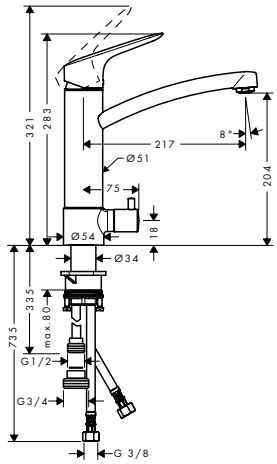

Logis M31 Single lever kitchen mixer 220, device shut-off valve, 1jet

Chrome | 71834000 | 265.00

AirPower | Comfort Zone

- ComfortZone 220
- swivel range 120°
- normal spray
- connection dimension: DN15
- maximum flow rate at 3 bar: 12 l/min
- ceramic cartridge
- connection type: G ⅜ connections
- temperature limitation adjustable
- suitable for continuous flow water heaters



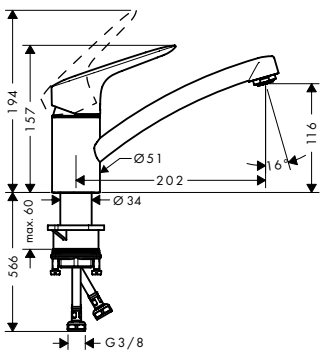

Logis M31 Single lever kitchen mixer 120, 1jet

Chrome | 71830000 | 101.30

AirPower | Comfort Zone

- ComfortZone 120
- swivel range 360°
- normal spray
- connection dimension: DN15
- maximum flow rate at 3 bar: 12 l/min
- ceramic cartridge
- connection type: G ⅜ connections
- temperature limitation adjustable
- suitable for continuous flow water heaters

Alternative products:

- **Logis M31** Single lever kitchen mixer 120, LowPressure/vented hot water cylinders, 1jet — Chrome | 71831000 | 121.20
- **Logis M31** Single lever kitchen mixer 120, CoolStart, EcoSmart, 1jet — Chrome | 71837000 | 101.30



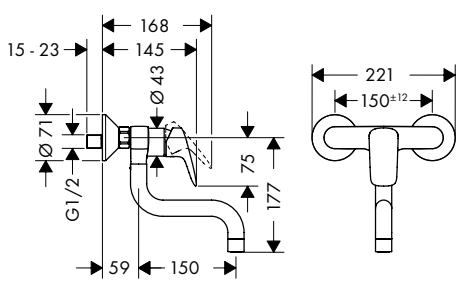

Logis M31 Single lever kitchen mixer, wall-mounted lowspout, 1jet

Chrome | 71836000 | 148.80

AirPower

- swivel range 220°
- normal spray
- centre distance 150 ± 12 mm
- connection dimension: DN15
- maximum flow rate at 3 bar: 13 l/min
- ceramic cartridge
- connection type: s-shaped connections
- temperature limitation adjustable
- suitable for continuous flow water heaters

Measurements within scale drawings are in mm.

Logis M32

	finish	code no.	Euro



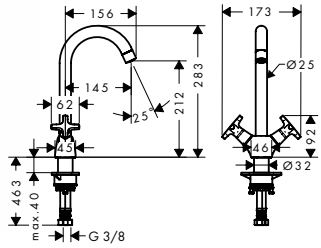

Logis M32 2-handle kitchen mixer 220, 1jet — Chrome — 71285000 — 166.10

AirPower · Comfort Zone

- ComfortZone 220
- swivel range adjustable in 3 steps 110°, 150° or 360°
- normal spray
- connection dimension: DN15
- maximum flow rate at 3 bar: 12 l/min
- ceramic valves 90°
- connection type: G ⅜ connections
- suitable for continuous flow water heaters

Alternative products:

- **Logis M32** 2-handle kitchen mixer 220, Eco, 1jet — Chrome — 71283000 — 166.10



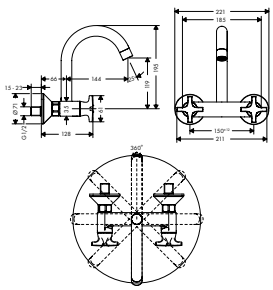

Logis M32 2-handle kitchen mixer, wall-mounted, highspout, 1jet — Chrome — 71286000 — 195.80

AirPower

- swivel range 360°
- normal spray
- centre distance 150 ± 12 mm
- connection dimension: DN15
- maximum flow rate at 3 bar: 15 l/min
- ceramic valves 90°
- connection type: s-shaped connections
- temperature limitation adjustable
- suitable for continuous flow water heaters

Alternative products:

- **Logis M32** 2-handle kitchen mixer, Eco, wall-mounted highspout, 1jet — Chrome — 71284000 — 195.80



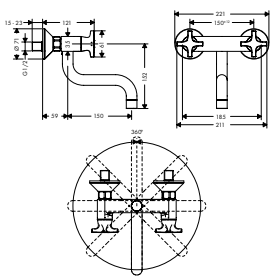

Logis M32 2-handle kitchen mixer, wall-mounted lowspout, 1jet — Chrome — 71287000 — 195.80

AirPower

- normal spray
- centre distance 150 ± 12 mm
- connection dimension: DN15
- maximum flow rate at 3 bar: 15 l/min
- ceramic valves 90°
- connection type: s-shaped connections
- temperature limitation adjustable
- suitable for continuous flow water heaters

Vernis M35

NEW



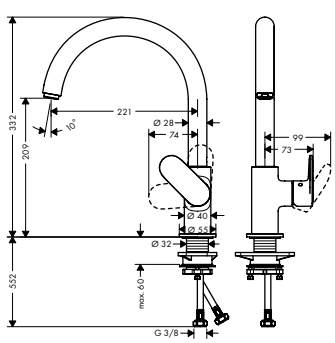

Vernis Blend M35 Single lever kitchen mixer 210 with swivel spout — Chrome — 71870000 — 150.00; Matt Black — 71870670 — 210.00

AirPower · Comfort Zone

- ComfortZone 210
- swivel range adjustable in 2 steps 120° or 360°
- normal spray
- connection dimension: DN15
- maximum flow rate at 3 bar: 11,1 l/min
- ceramic cartridge
- connection type: G ⅜ connections
- suitable for continuous flow water heaters

Measurements within scale drawings are in mm.

Technical specifications and units of measure are subject to change.

NEW



Vernis Shape M35 Single lever kitchen mixer 210 with swivel spout

- ComfortZone 210
- swivel range adjustable in 2 steps 120° or 360°
- normal spray
- connection dimension: DN15
- maximum flow rate at 3 bar: 11,1 l/min
- ceramic cartridge
- connection type: G ⅜ connections
- suitable for continuous flow water heaters

finish	code no.	Euro
Chrome	71871000	179.00
Matt Black	71871670	250.60

AirPower Comfort Zone

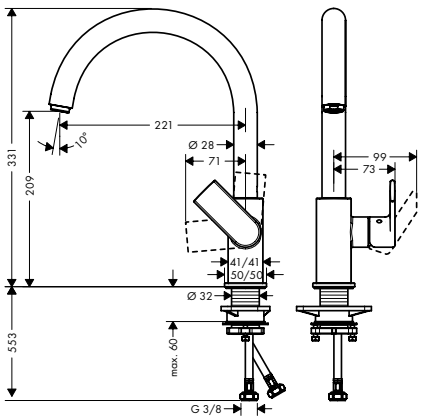

Measurements within scale drawings are in mm.

Technical specifications and units of measure are subject to change.

hansgrohe sink combis

Product ranges at a glance

	C71	**C51**
Surface sink	-800	-170
Surface kitchen tap	-000, -800	-000
60 cm Sink cabinet		
80 cm Sink cabinet		
		
90 cm Sink cabinet		
Surface-mounted installation	■	■
Flush-mounted installation	■	
Under-mounted installation		
sBox	■	■
Multiple spray types	■	■
With pull-out function	■	■
With swivel spout	■	■
Select	■	■
	page 673	page 679

■ Available

Stainless steel sink combis



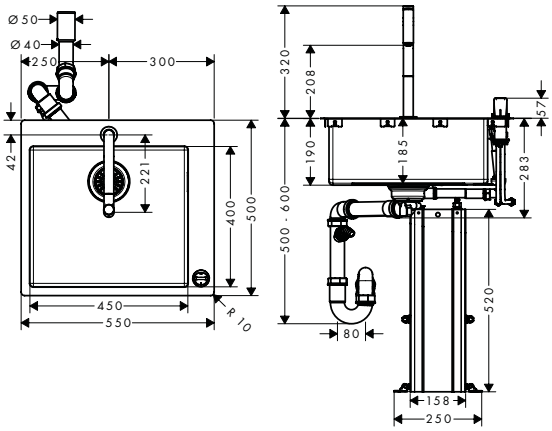

C71-F450-06 Sink combi 450 Select

- consists of: built-in sink, 2-hole single lever kitchen mixer, control unit, hose box, manual waste and overflow set
- material sink: stainless steel
- number of bowls: 1 main bowl
- tap hole and hole for control unit are pre-drilled
- sink depth: 190 mm
- cut-out dimensions: 530 x 480 mm
- cabinet size: 60 cm
- type of installation: flat on the countertop (self-rimming) or flush-mount installation
- position overflow: on the right side of the bowl
- tap ledge reinforcing for a tight and stable seating of the kitchen mixer
- corner radius: 10 mm
- connection type: G ⅜ connections
- connection dimension: DN15
- suitable for continuous flow water heaters
- ceramic cartridge
- MagFit magnetic shower support
- integrated non-return valve
- swivel range 150°
- laminar spray, shower spray
- ComfortZone 200
- Select button for a comfortable start/stop of the water flow
- sBox for quiet, smooth and protected hose guidance in the cabinet, under the countertop
- extension length up to 76 cm
- maximum flow rate at 3 bar: 8 l/min

Consisting of:

- 2-hole single lever kitchen mixer 200, pull-out spray, 2jet, sBox (# 73818XXX)
- D14-10 Manual waste and overflow set for single bowl (# 43921800)

Optional parts:

- F15 Cutting board walnut
- F16 Cutting board oak
- F17 Mobile drainboard
- F14 Multifunctional strainer

finish	code no.	Euro
Chrome	43201000	1,127.40
Stainless Steel Finish	43201800	1,296.60
	40960000	133.20
	40961000	100.00
Stainless Steel	40962800	86.70
Matt Black	40963000	21.70

Select · Pull-out · Comfort Zone · sBox Kitchen · Quick Clean

Measurements within scale drawings are in mm.

Technical specifications and units of measure are subject to change.



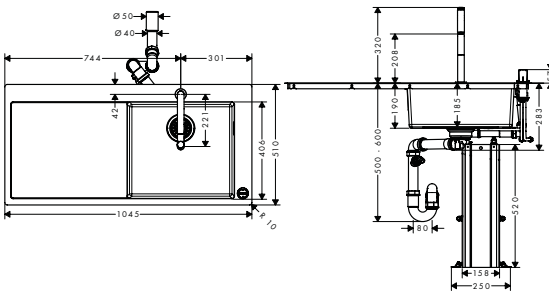

C71-F450-07 Sink combi 450
Select with drainboard left

	finish	code no.	Euro
	Chrome	43205000	1,424.40
	Stainless Steel Finish	43205800	1,588.60

Select · Pull-out · Comfort Zone · sBox Kitchen · Quick Clean

- consists of: built-in sink, 2-hole single lever kitchen mixer, control unit, hose box, manual waste and overflow set
- for installation in worktops from 25 mm
- material sink: stainless steel
- number of bowls: 1 main bowl
- with drainage
- tap hole and hole for control unit are pre-drilled
- orientation: bowl right
- sink depth: 190 mm
- cut-out dimensions: 1025 x 490 mm
- cabinet size: 60 cm
- type of installation: flat on the countertop (self-rimming) or flush-mount installation
- position overflow: on the right side of the bowl
- tap ledge reinforcing for a tight and stable seating of the kitchen mixer
- corner radius: 10 mm
- connection type: G ⅜ connections
- connection dimension: DN15
- suitable for continuous flow water heaters
- ceramic cartridge
- MagFit magnetic shower support
- integrated non-return valve
- swivel range 150°
- laminar spray, shower spray
- ComfortZone 200
- Select button for a comfortable start/stop of the water flow
- sBox for quiet, smooth and protected hose guidance in the cabinet, under the countertop
- extension length up to 76 cm
- maximum flow rate at 3 bar: 8 l/min

Consisting of:

- 2-hole single lever kitchen mixer 200, pull-out spray, 2jet, sBox (# 73818XXX)
- D14-10 Manual waste and overflow set for single bowl (# 43921800)

Optional parts:

· F14 Multifunctional strainer	Matt Black	40963000	21.70

Measurements within scale drawings are in mm.

Technical specifications and units of measure are subject to change.



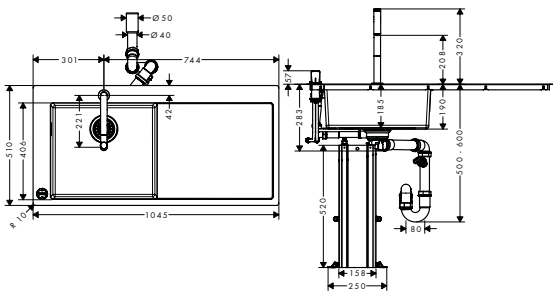

C71-F450-12 Sink combi 450
Select with drainboard right

finish	code no.	Euro
Chrome	43230000	1,424.40
Stainless Steel Finish	43230800	1,588.60

Select · Pull-out · Comfort Zone · sBox Kitchen · Quick Clean

- consists of: built-in sink, 2-hole single lever kitchen mixer, control unit, hose box, manual waste and overflow set
- for installation in worktops from 25 mm
- material sink: stainless steel
- number of bowls: 1 main bowl
- with drainage
- tap hole and hole for control unit are pre-drilled
- orientation: bowl left
- sink depth: 190 mm
- cut-out dimensions: 1025 x 490 mm
- cabinet size: 60 cm
- type of installation: flat on the countertop (self-rimming) or flush-mount installation
- position overflow: on the left side of the bowl
- tap ledge reinforcing for a tight and stable seating of the kitchen mixer
- corner radius: 10 mm
- connection type: G ⅜ connections
- connection dimension: DN15
- suitable for continuous flow water heaters
- ceramic cartridge
- MagFit magnetic shower support
- integrated non-return valve
- swivel range 150°
- laminar spray, shower spray
- ComfortZone 200
- Select button for a comfortable start/stop of the water flow
- sBox for quiet, smooth and protected hose guidance in the cabinet, under the countertop
- extension length up to 76 cm
- maximum flow rate at 3 bar: 8 l/min

Consisting of:

- 2-hole single lever kitchen mixer 200, pull-out spray, 2jet, sBox (# 73818XXX)
- D14-10 Manual waste and overflow set for single bowl (# 43921800)

Optional parts:

· F14 Multifunctional strainer	Matt Black	40963000	21.70

Measurements within scale drawings are in mm.



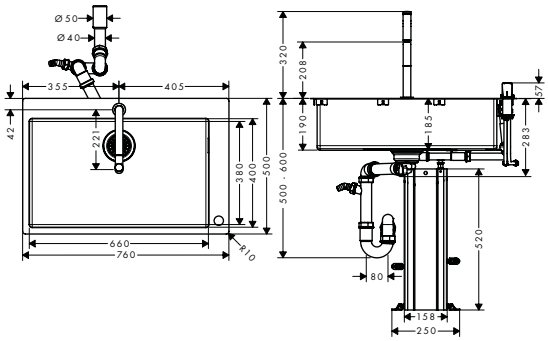

C71-F660-08 Sink combi 660 Select

finish	code no.	Euro
Chrome	43202000	1,217.60
Stainless Steel Finish	43202800	1,386.80

Select · Pull-out · Comfort Zone · sBox Kitchen · Quick Clean

- consists of: built-in sink, 2-hole single lever kitchen mixer, control unit, hose box, manual waste and overflow set
- material sink: stainless steel
- number of bowls: 1 main bowl
- tap hole and hole for control unit are pre-drilled
- sink depth: 190 mm
- cut-out dimensions: 740 x 480 mm
- cabinet size: 80 cm
- type of installation: flat on the countertop (self-rimming) or flush-mount installation
- position overflow: on the right side of the bowl
- tap ledge reinforcing for a tight and stable seating of the kitchen mixer
- corner radius: 10 mm
- connection type: G ⅜ connections
- connection dimension: DN15
- suitable for continuous flow water heaters
- ceramic cartridge
- MagFit magnetic shower support
- integrated non-return valve
- swivel range 150°
- laminar spray, shower spray
- ComfortZone 200
- Select button for a comfortable start/stop of the water flow
- sBox for quiet, smooth and protected hose guidance in the cabinet, under the countertop
- extension length up to 76 cm
- maximum flow rate at 3 bar: 8 l/min

Consisting of:

- 2-hole single lever kitchen mixer 200, pull-out spray, 2jet, sBox (# 73818XXX)
- D14-10 Manual waste and overflow set for single bowl (# 43921800)

Optional parts:

· F15 Cutting board walnut		40960000	133.20
· F16 Cutting board oak		40961000	100.00
· F17 Mobile drainboard	Stainless Steel	40962800	86.70
· F14 Multifunctional strainer	Matt Black	40963000	21.70

Measurements within scale drawings are in mm.

Technical specifications and units of measure are subject to change.



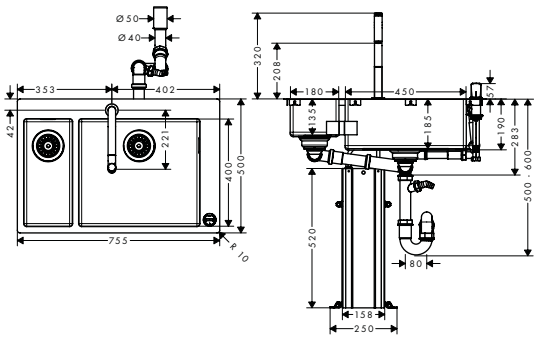

C71-F655-09 Sink combi 180/450 Select

- consists of: built-in sink, 2-hole single lever kitchen mixer, control unit, hose box, manual waste and overflow set
- material sink: stainless steel
- number of bowls: 1 main bowl and 1 additional bowl
- tap hole and hole for control unit are pre-drilled
- sink depth: 190 mm
- cut-out dimensions: 735 x 480 mm
- cabinet size: 80 cm
- type of installation: flat on the countertop (self-rimming) or flush-mount installation
- position overflow: on the right side of the main bowl
- tap ledge reinforcing for a tight and stable seating of the kitchen mixer
- corner radius: 10 mm
- connection type: G ⅜ connections
- connection dimension: DN15
- suitable for continuous flow water heaters
- ceramic cartridge
- MagFit magnetic shower support
- integrated non-return valve
- swivel range 150°
- laminar spray, shower spray
- ComfortZone 200
- Select button for a comfortable start/stop of the water flow
- sBox for quiet, smooth and protected hose guidance in the cabinet, under the countertop
- extension length up to 76 cm
- maximum flow rate at 3 bar: 8 l/ min

Consisting of:

- 2-hole single lever kitchen mixer 200, pull-out spray, 2jet, sBox (# 73818XXX)
- D15-10 Manual waste and overflow set for double bowl (# 43922800)

finish	code no.	Euro
Chrome	43206000	1,578.40
Stainless Steel Finish	43206800	1,747.60

Select · Pull-out · Comfort Zone · sBox Kitchen · Quick Clean

Optional parts:

· F15 Cutting board walnut		40960000	133.20
· F16 Cutting board oak		40961000	100.00
· F17 Mobile drainboard	Stainless Steel	40962800	86.70
· F14 Multifunctional strainer	Matt Black	40963000	21.70

Measurements within scale drawings are in mm.

Technical specifications and units of measure are subject to change.



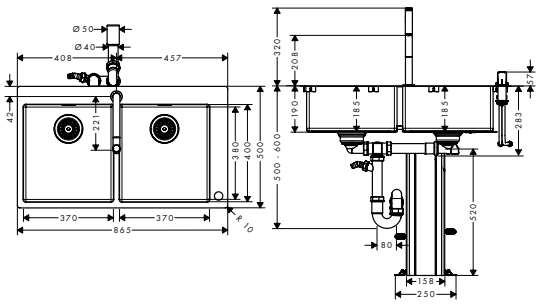

C71-F765-10 Sink combi 370/370 Select

- consists of: built-in sink, 2-hole single lever kitchen mixer, control unit, hose box, manual waste and overflow set
- material sink: stainless steel
- number of bowls: 2 main bowls
- tap hole and hole for control unit are pre-drilled
- sink depth: 190 mm
- cut-out dimensions: 840 x 480 mm
- cabinet size: 90 cm
- type of installation: flat on the countertop (self-rimming) or flush-mount installation
- tap ledge reinforcing for a tight and stable seating of the kitchen mixer
- corner radius: 10 mm
- connection type: G ⅜ connections
- connection dimension: DN15
- suitable for continuous flow water heaters
- ceramic cartridge
- MagFit magnetic shower support
- integrated non-return valve
- swivel range 150°
- laminar spray, shower spray
- ComfortZone 200
- Select button for a comfortable start/stop of the water flow
- sBox for quiet, smooth and protected hose guidance in the cabinet, under the countertop
- extension length up to 76 cm
- maximum flow rate at 3 bar: 8 l/min

Consisting of:

- 2-hole single lever kitchen mixer 200, pull-out spray, 2jet, sBox (# 73818XXX)
- D15-10 Manual waste and overflow set for double bowl (# 43922800)

	finish	code no.	Euro
	Chrome	43203000	1,691.00
	Stainless Steel Finish	43203800	1,860.30

Select · Pull-out · Comfort Zone · sBox Kitchen · Quick Clean

Optional parts:

· F15 Cutting board walnut		40960000	133.20
· F16 Cutting board oak		40961000	100.00
· F17 Mobile drainboard	Stainless Steel	40962800	86.70
· F14 Multifunctional strainer	Matt Black	40963000	21.70

Measurements within scale drawings are in mm.

Technical specifications and units of measure are subject to change.

SilicaTec sink combis



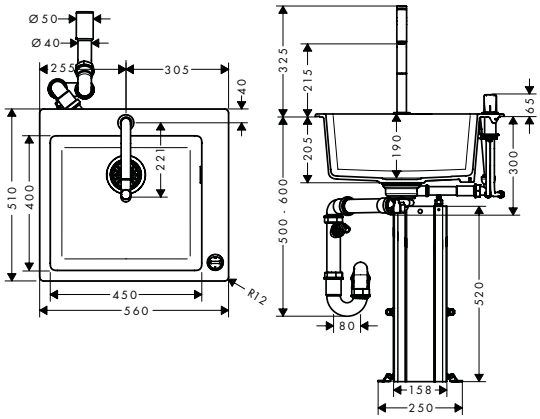

	finish	code no.	Euro
C51-F450-06 Sink combi 450 Select	Chrome	43217000	843.60

Select · Pull-out · Comfort Zone · sBox Kitchen · Quick Clean

- consists of: built-in sink, 2-hole single lever kitchen mixer, control unit, hose box, manual waste and overflow set
- material sink: SilicaTec
- number of bowls: 1 main bowl
- tap hole for drilling is predefined (see scale drawing), diamond drill included
- sink depth: 190 mm
- cut-out dimensions: 540 x 490 mm
- cabinet size: 60 cm
- type of installation: topmount
- position overflow: on the right side of the bowl
- connection type: G ⅜ connections
- connection dimension: DN15
- suitable for continuous flow water heaters
- ceramic cartridge
- MagFit magnetic shower support
- integrated non-return valve
- swivel range 150°
- laminar spray, shower spray
- ComfortZone 200
- Select button for a comfortable start/stop of the water flow
- sBox for quiet, smooth and protected hose guidance in the cabinet, under the countertop
- extension length up to 76 cm
- maximum flow rate at 3 bar: 8 l/ min

Consisting of:

- S510-F450 Built-in sink 450 (# 43312170)
- 2-hole single lever kitchen mixer 200, pull-out spray, 2jet, sBox (# 73818000)
- D16-10 Manual waste and overflow set for single bowl granite (# 43927000)

Optional parts:

· F15 Cutting board walnut		40960000	133.20
· F16 Cutting board oak		40961000	100.00
· F17 Mobile drainboard	Stainless Steel	40962800	86.70
· F14 Multifunctional strainer	Matt Black	40963000	21.70

Measurements within scale drawings are in mm.

Technical specifications and units of measure are subject to change.



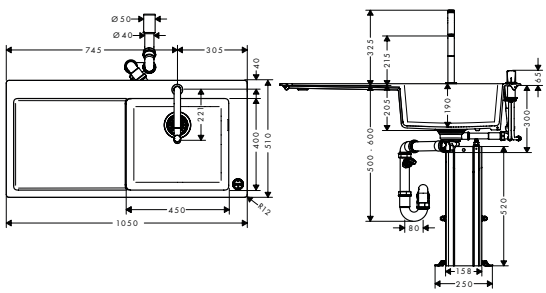

	finish	code no.	Euro
C51-F450-08 Sink combi 450 Select with drainboard left	Chrome	43219000	1,008.00

Select · Pull-out · Comfort Zone · sBox Kitchen · Quick Clean

- consists of: built-in sink, 2-hole single lever kitchen mixer, control unit, hose box, manual waste and overflow set
- for installation in worktops from 20 mm
- material sink: SilicaTec
- number of bowls: 1 main bowl
- with drainage
- tap hole for drilling is predefined (see scale drawing), diamond drill included
- orientation: bowl right
- sink depth: 190 mm
- cut-out dimensions: 1030 x 490 mm
- cabinet size: 60 cm
- type of installation: topmount
- position overflow: on the right side of the bowl
- connection type: G ⅜ connections
- connection dimension: DN15
- suitable for continuous flow water heaters
- ceramic cartridge
- MagFit magnetic shower support
- integrated non-return valve
- swivel range 150°
- laminar spray, shower spray
- ComfortZone 200
- Select button for a comfortable start/stop of the water flow
- sBox for quiet, smooth and protected hose guidance in the cabinet, under the countertop
- extension length up to 76 cm
- maximum flow rate at 3 bar: 8 l/min

Consisting of:

- S514-F450 Built-in sink 450 with drainboard left (# 43314170)
- 2-hole single lever kitchen mixer 200, pull-out spray, 2jet, sBox (# 73818000)
- D16-10 Manual waste and overflow set for single bowl granite (# 43927000)

Optional parts:

· F15 Cutting board walnut		40960000	133.20
· F16 Cutting board oak		40961000	100.00
· F14 Multifunctional strainer	Matt Black	40963000	21.70

Measurements within scale drawings are in mm.

Technical specifications and units of measure are subject to change.



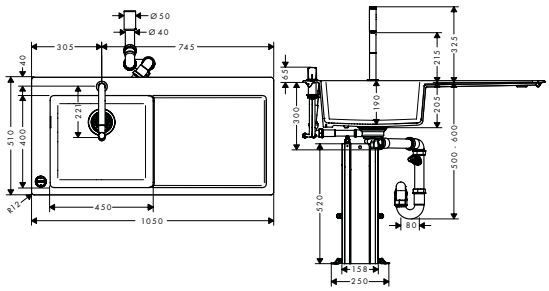

C51-F450-12 Sink combi 450
Select with drainboard right

finish	code no.	Euro
Chrome	43228000	1,008.00

Select · Pull-out · Comfort Zone · sBox Kitchen · Quick Clean

- consists of: built-in sink, 2-hole single lever kitchen mixer, control unit, hose box, automatic waste and overflow set
- material sink: SilicaTec
- number of bowls: 1 main bowl
- with drainage
- tap hole for drilling is predefined (see scale drawing), diamond drill included
- orientation: bowl left
- sink depth: 190 mm
- cut-out dimensions: 1030 x 490 mm
- cabinet size: 60 cm
- type of installation: topmount
- position overflow: on the left side of the bowl
- connection type: G ⅜ connections
- connection dimension: DN15
- suitable for continuous flow water heaters
- ceramic cartridge
- MagFit magnetic shower support
- integrated non-return valve
- swivel range 150°
- laminar spray, shower spray
- ComfortZone 200
- Select button for a comfortable start/stop of the water flow
- sBox for quiet, smooth and protected hose guidance in the cabinet, under the countertop
- extension length up to 76 cm
- maximum flow rate at 3 bar: 8 l/min

Consisting of:

- S5110-F450 Built-in sink 450 with drainboard right (# 43330170)
- 2-hole single lever kitchen mixer 200, pull-out spray, 2jet, sBox (# 73818000)
- D16-10 Manual waste and overflow set for single bowl granite (# 43927000)

Optional parts:

· F15 Cutting board walnut		40960000	133.20
· F16 Cutting board oak		40961000	100.00
· F14 Multifunctional strainer	Matt Black	40963000	21.70

Measurements within scale drawings are in mm.

Technical specifications and units of measure are subject to change.



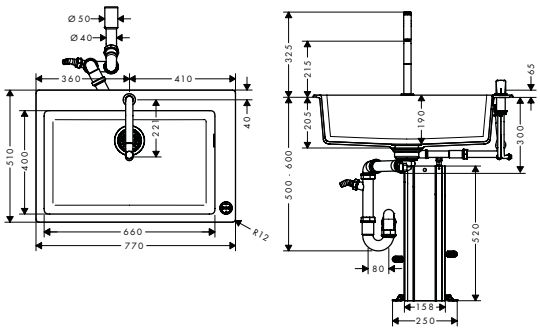

C51-F660-07 Sink combi 660 Select

finish	code no.	Euro
Chrome	43218000	920.40

Select · Pull-out · Comfort Zone · sBox Kitchen · Quick Clean

- consists of: built-in sink, 2-hole single lever kitchen mixer, control unit, hose box, manual waste and overflow set
- material sink: SilicaTec
- number of bowls: 1 main bowl
- tap hole for drilling is predefined (see scale drawing), diamond drill included
- sink depth: 190 mm
- cut-out dimensions: 750 x 490 mm
- cabinet size: 80 cm
- type of installation: topmount
- position overflow: on the right side of the bowl
- connection type: G ⅜ connections
- connection dimension: DN15
- suitable for continuous flow water heaters
- ceramic cartridge
- MagFit magnetic shower support
- integrated non-return valve
- swivel range 150°
- laminar spray, shower spray
- ComfortZone 200
- Select button for a comfortable start/stop of the water flow
- sBox for quiet, smooth and protected hose guidance in the cabinet, under the countertop
- extension length up to 76 cm
- maximum flow rate at 3 bar: 8 l/min

Consisting of:

- S510-F660 Built-in sink 660 (# 43313170)
- 2-hole single lever kitchen mixer 200, pull-out spray, 2jet, sBox (# 73818000)
- D16-10 Manual waste and overflow set for single bowl granite (# 43927000)

Optional parts:

· F15 Cutting board walnut		40960000	133.20
· F16 Cutting board oak		40961000	100.00
· F17 Mobile drainboard	Stainless Steel	40962800	86.70
· F14 Multifunctional strainer	Matt Black	40963000	21.70

Measurements within scale drawings are in mm.

Technical specifications and units of measure are subject to change.



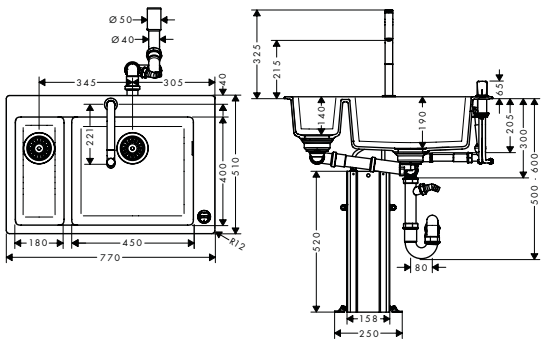

C51-F635-09 Sink combi 180/450 Select

- consists of: built-in sink, 2-hole single lever kitchen mixer, control unit, hose box, manual waste and overflow set
- material sink: SilicaTec
- number of bowls: 1 main bowl and 1 additional bowl
- tap hole for drilling is predefined (see scale drawing), diamond drill included
- sink depth: 190 mm
- cut-out dimensions: 750 x 490 mm
- cabinet size: 80 cm
- type of installation: topmount
- position overflow: on the right side of the main bowl
- connection type: G ⅜ connections
- connection dimension: DN15
- suitable for continuous flow water heaters
- ceramic cartridge
- MagFit magnetic shower support
- integrated non-return valve
- swivel range 150°
- laminar spray, shower spray
- ComfortZone 200
- Select button for a comfortable start/stop of the water flow
- sBox for quiet, smooth and protected hose guidance in the cabinet, under the countertop
- extension length up to 76 cm
- maximum flow rate at 3 bar: 8 l/min

Consisting of:

- S510-F635 Built-in sink 180/450 (# 43315170)
- 2-hole single lever kitchen mixer 200, pull-out spray, 2jet, sBox (# 73818000)
- D17-10 Manual waste and overflow set for double bowl granite (# 43928000)

finish	code no.	Euro
Chrome	43220000	942.20

Select · Pull-out · Comfort Zone · sBox Kitchen · Quick Clean

Optional parts:

· F15 Cutting board walnut		40960000	133.20
· F16 Cutting board oak		40961000	100.00
· F17 Mobile drainboard	Stainless Steel	40962800	86.70
· F14 Multifunctional strainer	Matt Black	40963000	21.70

Measurements within scale drawings are in mm.



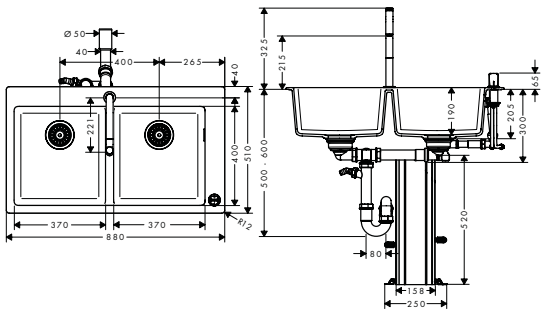

C51-F770-10 Sink combi 370/370 Select

finish	code no.	Euro
Chrome	43221000	1,008.00

Select · Pull-out · Comfort Zone · sBox Kitchen · Quick Clean

- consists of: built-in sink, 2-hole single lever kitchen mixer, control unit, hose box, manual waste and overflow set
- material sink: SilicaTec
- number of bowls: 2 main bowls
- tap hole for drilling is predefined (see scale drawing), diamond drill included
- sink depth: 190 mm
- cut-out dimensions: 860 x 490 mm
- cabinet size: 90 cm
- type of installation: topmount
- position overflow: on the right side of the bowl
- connection type: G ⅜ connections
- connection dimension: DN15
- suitable for continuous flow water heaters
- ceramic cartridge
- MagFit magnetic shower support
- integrated non-return valve
- swivel range 150°
- laminar spray, shower spray
- ComfortZone 200
- Select button for a comfortable start/stop of the water flow
- sBox for quiet, smooth and protected hose guidance in the cabinet, under the countertop
- extension length up to 76 cm
- maximum flow rate at 3 bar: 8 l/min

Consisting of:

- S510-F770 Built-in sink 370/370 (# 43316170)
- 2-hole single lever kitchen mixer 200, pull-out spray, 2jet, sBox (# 73818000)
- D17-10 Manual waste and overflow set for double bowl granite (# 43928000)

Optional parts:

· F15 Cutting board walnut		40960000	133.20
· F16 Cutting board oak		40961000	100.00
· F17 Mobile drainboard	Stainless Steel	40962800	86.70
· F14 Multifunctional strainer	Matt Black	40963000	21.70

Measurements within scale drawings are in mm.

Technical specifications and units of measure are subject to change.

Optional parts for stainless steel sinks

	finish	code no.	Euro
	Stainless Steel	43921800	26.80

D14-10 Manual waste and overflow set for single bowl

- consists of: waste and overflow set, screen basket, trap
- drain system: drain operation via pushing/pulling screen basket
- diameter 40 / 50
- 1 1/2" with space-saving drain pipe and odor trap
- screen basket: 3 1/2"

	finish	code no.	Euro
	Stainless Steel	43922800	44.60

D15-10 Manual waste and overflow set for double bowl

- consists of: waste and overflow set, screen basket, trap
- drain system: drain operation of main bowl and additional bowl via pushing/pulling screen basket
- diameter 40 / 50
- 1 1/2" with space-saving drain pipe and odor trap
- screen basket: 3 1/2"

	finish	code no.	Euro
	Stainless Steel	43931800	46.90

D14-11 Automatic waste and overflow set for single bowl

- turning handle for eccentric operation in chrome
- consists of: waste and overflow set, pop-up waste set, trap
- drain system: drain operation via turning pop-up handle
- diameter 40 / 50
- 1 1/2" with space-saving drain pipe and odor trap
- screen basket: 3 1/2"

Optional parts:

· A11 turning handle for eccentric operation	Stainless Steel Finish	40953800	18.30

	finish	code no.	Euro
	Stainless Steel	43932800	72.60

D15-11 Automatic waste and overflow set for double bowl

- turning handle for eccentric operation in chrome
- consists of: waste and overflow set, pop-up waste set, trap
- drain system: drain operation of main bowl via turning pop-up handle and additional bowl via pushing/pulling screen basket
- diameter 40 / 50
- 1 1/2" with space-saving drain pipe and odor trap
- screen basket: 3 1/2"

Optional parts:

· A11 turning handle for eccentric operation	Stainless Steel Finish	40953800	18.30

Measurements within scale drawings are in mm.

Technical specifications and units of measure are subject to change.

Optional parts for granite sinks

	finish	code no.	Euro
	Chrome	43927000	26.70

D16-10 Manual waste and overflow set for single bowl granite

- consists of: waste and overflow set, screen basket, trap
- drain system: drain operation via pushing/pulling screen basket
- diameter 40 / 50
- 1 1/2" with space-saving drain pipe and odor trap
- screen basket: 3 1/2"

	finish	code no.	Euro
	Chrome	43928000	44.40

D17-10 Manual waste and overflow set for double bowl granite

- consists of: waste and overflow set, screen basket, trap
- drain system: drain operation of main bowl and additional bowl via pushing/ pulling screen basket
- diameter 40 / 50
- 1 1/2" with space-saving drain pipe and odor trap
- screen basket: 3 1/2"

	finish	code no.	Euro
	Chrome	43937000	46.70

D16-11 Automatic waste and overflow set for single bowl granite

- consists of: waste and overflow set, pop-up waste set, trap
- drain system: drain operation via turning pop-up handle
- diameter 40 / 50
- 1 1/2" with space-saving drain pipe and odor trap
- screen basket: 3 1/2"

Optional parts:

· A11 turning handle for eccentric operation	Matt Black	40953670	32.10
	Stainless Steel Finish	40953800	18.30

	finish	code no.	Euro
	Chrome	43938000	72.30

D17-11 Automatic waste and overflow set for double bowl granite

- consists of: waste and overflow set, pop-up waste set, trap
- drain system: drain operation of main bowl via turning pop-up handle and additional bowl via pushing/pulling screen basket
- diameter 40 / 50
- 1 1/2" with space-saving drain pipe and odor trap
- screen basket: 3 1/2"

Optional parts:

· A11 turning handle for eccentric operation	Matt Black	40953670	32.10
	Stainless Steel Finish	40953800	18.30

Measurements within scale drawings are in mm.

Technical specifications and units of measure are subject to change.

Optional parts for built-in sinks and undermount sinks

	finish	code no.	Euro
 A10 drain cover · stainless steel sinks with 3 ½" basket strainer · material: plastic	Stainless Steel Finish	40952800	12.60
 A11 turning handle for eccentric operation · material: metal	Matt Black Stainless Steel Finish	40953670 40953800	32.10 18.30

Optional parts for sBox

 F12 compensating element for sBox · for height compensation of the sBox up to 100 mm		43333000	22.90

Measurements within scale drawings are in mm.

Technical specifications and units of measure are subject to change.

		finish	code no.	Euro
	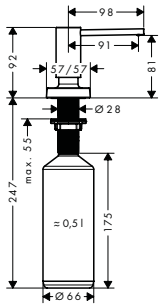	**A71 soap-/ lotion dispenser** · suitable for matched design to selected kichen mixers · projection 91 mm · material: durable metal construction · non-corroding outlet pipe · filling capacity 500 ml · dosage 2 ml · easy to fill up from the top · for installation in worktops up to 55 mm · easy and save installation without tools needed · mounting hole with 28 - 35 mm diameter needed	Chrome Matt Black Stainless Steel Finish	40468000 40468670 40468800	83.30 112.40 108.20
	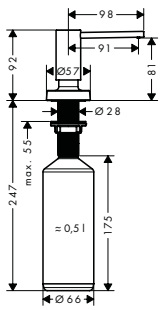	**A51 soap-/ lotion dispenser** · suitable for matched design to selected kichen mixers · projection 91 mm · material: durable metal construction · non-corroding outlet pipe · filling capacity 500 ml · dosage 2 ml · easy to fill up from the top · for installation in worktops up to 55 mm · easy and save installation without tools needed · mounting hole with 28 - 35 mm diameter needed	Chrome Matt Black Stainless Steel Finish	40448000 40448670 40448800	83.30 112.40 108.20
	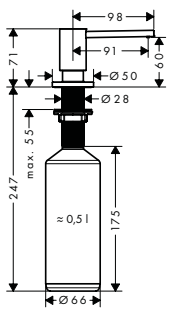	**A41 soap-/ lotion dispenser** · suitable for matched design to selected kichen mixers · projection 91 mm · material: durable metal construction · non-corroding outlet pipe · filling capacity 500 ml · dosage 2 ml · easy to fill up from the top · for installation in worktops up to 55 mm · easy and save installation without tools needed · mounting hole with 28 - 35 mm diameter needed	Chrome Brushed Black Chrome Matt Black Stainless Steel Finish	40438000 40438340 40438670 40438800	61.00 88.30 82.40 79.40
	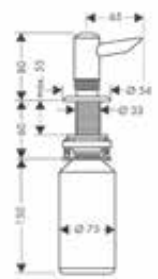	**Soap-/ lotion dispenser** · material: metal · filling capacity 300 ml	Chrome Stainless Steel Finish	40418000 40418800	108.90 163.40

Measurements within scale drawings are in mm.

Technical specifications and units of measure are subject to change.

	finish	code no.	Euro
Kitchen device shut-off valve	Chrome	10823000	149.00
· for counter surfaces up to 47 mm thick · shaft Ø 27 mm · non-return valve · connection dimension DN15 · device connection DN20	Stainless Steel Finish	10823800	223.50
F21- Shut-off valve for concealed installation	Chrome	72841000	69.60
· connection dimension: G ½ inclusive adapter G ¾ · clamping range: 0 - 60 mm · diameter drill hole: 35 mm · diameter: 48.0 mm · device shut-off valve for installation in kitchen sinks and worktops	Matt Black	72841670	90.40
	Stainless Steel Finish	72841800	90.40
F15 Cutting board walnut		40960000	133.20
· perfect to work in and outside of the sink · suitable for S51 silicaTec sinks, S71 stainless steel sinks · material: walnut			
F16 Cutting board oak		40961000	100.00
· perfect to work in and outside of the sink · suitable for S51 silicaTec sinks, S71 stainless steel sinks · material: oak			
F14 Multifunctional strainer	Matt Black	40963000	21.70
· ideal to clean fruits and vegetables or to pour out noodles · suitable for S51 silicaTec sinks, S71 stainless steel sinks, kitchen sinks with a depth of 400 mm and 406 mm · material: plastic			
F17 Mobile drainboard	Stainless Steel	40962800	86.70
· perfect to unfreeze food · for safe storage of glasses and bulky dishes · high functionality, water can run off easily into the sink · suitable for S51 silicaTec sinks, S71 stainless steel sinks · material: plastic/stainless steel			

Measurements within scale drawings are in mm.

Technical specifications and units of measure are subject to change.

Spare parts and accessories for showers, bath mixers and kitchen mixers





Shower hose	page 692		Showers	page 692	
Shower holder and slider	page 692		Soap dishes and shampoo holder	page 693	
Covers	page 695		Service sets for showers	page 696	
Wall bar spacers	page 696				
Cartridges	page 699		Spray former/ aerators	page 700	
Diverters	page 702		Shut-off units and thermostatic cartridges	page 702	
Handles	page 703		Escutcheons and flanges	page 706	

Spare parts and accessories for showers, bath mixers and kitchen mixers

Shower hose



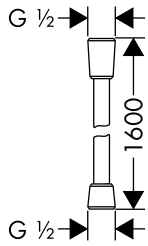

Isiflex Shower hose 160 cm

- high-quality shower hose
- with plastic coating, easy to clean
- shower hose length: 1.60 m
- pivot connector prevent hose from tangling
- kink-protected

finish	code no.	Euro
Chrome	28276000	26.80
Chrome/Blue	28276030	44.90
Chrome/Gold Optic	28276090	55.40
Brushed Bronze	28276140	40.20
Brushed Black Chrome	28276340	40.20
Red	28276430	44.90
White	28276450	33.50
Grey	28276460	44.90
Yellow	28276480	44.90
Black	28276610	44.90
Matt Black	28276670	37.50
Matt White	28276700	37.50
Stainless Steel Optic	28276800	40.20
Satinox	28276810	44.90
Satin Chrome	28276880	44.90
Polished Gold Optic	28276990	40.20

Alternative sizes:

· **Isiflex** Shower hose 125 cm	Chrome	28272000	24.80
	Brushed Bronze	28272140	37.10
	Brushed Black Chrome	28272340	37.10
	White	28272450	31.10
	Matt Black	28272670	31.10
	Matt White	28272700	31.10
	Polished Gold Optic	28272990	37.10
· **Isiflex** Shower hose 200 cm	Chrome	28274000	28.40

Showers



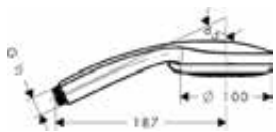

Croma 100 Hand shower Multi

- shower head size: 100 mm
- spray type: Rain, MonoRain, Massage spray
- spray type adjustment by turning spray disc
- grey spray disc
- maximum flow rate at 3 bar: 19 l/min
- minimum flow pressure: 1,2 bar
- with internal water conduction
- rinseable screen seal
- connection thread G ½
- connection dimension: DN15
- suitable for continous flow water heaters

	Chrome	28536000	67.70
	Red	28536430	98.10
	White	28536450	98.10
	Grey	28536460	98.10
	Black	28536610	98.10
	Green (Flash)	28536710	98.10
	Satinox	28536810	98.10
	Satin Chrome	28536880	98.10

Quick Clean

XXL Performance

Water saving EcoSmart version:

· **Croma 100** Hand shower Multi EcoSmart 9 l/min	Chrome	28538000	72.60

Shower holder and sliders



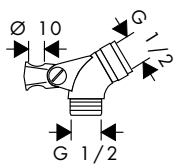

Universal joint for Unica

- dimension: G ½

	Chrome	28650000	17.60



Support for Unica'88 wall bar Ø 22 mm

- diameter: 22 mm

	Chrome	28672000	28.20
	White	28672450	55.40
	Satin Chrome	28672880	44.90

Measurements within scale drawings are in mm.

Technical specifications and units of measure are subject to change.

		finish	code no.	Euro
	Support for Unica'E wall bar (satinchrome)	Satin Chrome	96170000	55.40
	Support for Unica'A wall bar	Chrome Fine Brass	96195000 96195840	98.10 196.30
	Slider for Unica'D shower bar · diameter: 25 mm	Chrome White Yellow Fine Brass Satin Chrome	96190000 96190450 96190480 96190840 96190880	55.40 67.70 67.70 98.10 67.70
	Hand shower holder for Pharo shower panel Comfort Plus	Satin Chrome	25968000	55.40
	Support for Unica' B wall bar · diameter: 22 mm	Topas Translucent Blue Fine Brass Satin Chrome	95065520 95065530 95065840 95065880	55.40 55.40 78.90 55.40
	Support for Rainbow wall bar · diameter: 25 mm	Chrome	97336000	67.70

Soap dishes and shampoo holder



	Casetta Soap dish/ shelf E · with mounting material · length 200 mm · shelf finish: chrome, white or black	Chrome White/Chrome Black/Chrome	26511000 26511400 26511600	68.50 68.50 68.50


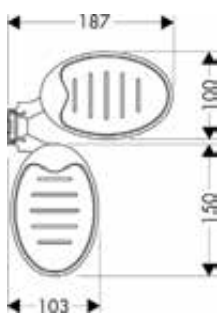

	Casetta Soap dishes Raindance · material: plastic	Chrome	28698000	79.00

Measurements within scale drawings are in mm.

Spare parts and accessories for showers, bath mixers and kitchen mixers

		finish	code no.	Euro
	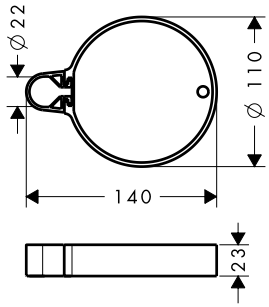	**Casetta** Soap dish C · with mounting material · for shower bars with Ø 22 mm	Chrome	28678000	15.70
	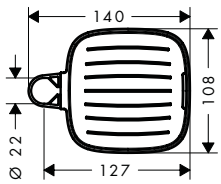	**Casetta** Soap dish E · with mounting material · for shower bars with Ø 18 / 22 / 25 mm	Chrome	26519000	19.90
	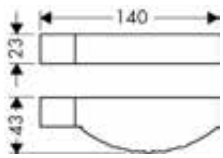	**Casetta** Soap dishes Unica 88 · for shower bars with Ø 22 mm · material: transparent plastic · self-draining soap dish for Unica S and C wallbars	Transparent	28675000	28.20
	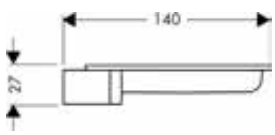	**Casetta** Soap dish S	Transparent	28684000	15.70
	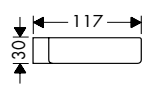	Casetta soap dish for Unica'E/ Unica'F wall bar	Transparent	28685000	28.20
		Clips Ø 25 mm for Casetta'D soap dishes · diameter: 25 mm · packaging unit: 2 pieces	Transparent	96192000	6.60

Measurements within scale drawings are in mm.

Technical specifications and units of measure are subject to change.

		finish	code no.	Euro
	Clip for Casetta'E soap dish · packaging unit: 1 piece	Transparent	96193000	4.10
	Clips for Casetta'F soap dishes · packaging unit: 2 pieces	Transparent	96194000	6.60
	Clip Ø 18 mm for Casetta Unica standard soap dishes · diameter: 18 mm · packaging unit: 1 piece	Transparent	96188000	4.10
	Clip Ø 22 mm for Casetta Unica'88 and Casetta Unica'S soap dishes · packaging unit: 1 piece		96189000	4.10
	Shampoo holder and cover for Unica'E wall bar	Satin Chrome	96177880	14.40
Covers				
	Cover for Unica'A wall bar · packaging unit: 2 pieces	Chrome	96272000	17.60
	Wall support and cover for Unica'88 wall bar · for wall bars with a diameter of 22 mm	Chrome White	92109000 92109450	28.20 35.00
	Covers for Unica'88 wall bar	Chrome	92107000	14.40
	Cover for Unica'88 wall bar · wall bar Ø 22 mm · packaging unit: 2 pieces	Chrome	94053000	14.40
	Cover for Unica'B wall bar · wall bar Ø 22 mm	Chrome	95064000	14.40

Measurements within scale drawings are in mm.

Spare parts and accessories for showers, bath mixers and kitchen mixers

		finish	code no.	Euro
	Covers for Unica'D wall bar · wall bar Ø 25 mm · packaging unit: 2 pieces	Chrome	94055000	14.40
	Covers for Unica'S wall bar · wall bar Ø 22 mm · packaging unit: 2 pieces	Chrome	94051000	10.90
	Wall support and cover for Unica'S wall bar · for wall bars with a diameter of 22 mm	Chrome	96191000	17.60
	Covers for Raindance wall bar		97116000	44.90

Service sets for showers

	Service set for Selecta Novo hand shower		92018000	14.40
	Service set for Aktiva hand shower		92027000	22.10
	Service set for Team Compact overhead shower		92017000	35.00

Wall bar spacers

 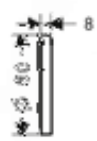	Wall bar spacer · material: plastic	Chrome	98681000	14.40
 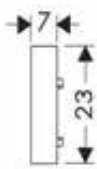	Wall bar spacer for Unica wall bar D · material: plastic	Chrome	96186000	8.70

Measurements within scale drawings are in mm.

Technical specifications and units of measure are subject to change.

	finish	code no.	Euro
 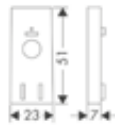 Wall bar spacer · material: plastic	Chrome	97450000	8.70
  Wall bar spacer for Unica wall bar S · material: plastic	Chrome	96184000	8.20
Other shower spare parts  Hose seal		98058000	2.50
 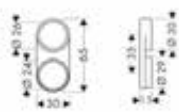 Hose duct · material: transparent plastic	Transparent	28072000	4.40
 Water saving set for Croma hand shower		96708000	6.60
 Water saving set · material: plastic		92019000	4.10
 Mounting set for Unica wall bars		96179000	8.90
 Hose connection for Ecostat thermostatic shower mixer for exposed installation		98556000	22.10

Measurements within scale drawings are in mm.

		finish	code no.	Euro
	Filter packing · packaging unit = 5 pieces		94246000	2.50
	Rim mounted adapter 25° · dimension: G ½	Chrome	28071000	28.20

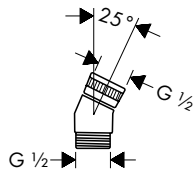

Measurements within scale drawings are in mm.

Technical specifications and units of measure are subject to change.

Cartridges

		finish	code no.	Euro
	Ceramic cartridge complete M3/ M2		92730000	44.90
	Cartridge complete without mouth spray connection unit · for washbasin mixers, bidet mixers and single lever kitchen mixers		14095000	78.90
	Cartridge complete with mouth spray connection unit · for washbasin mixers with ball mixing system		14098000	78.90
	Cartridge complete for mixers for vented hot water cylinders · for washbasin mixers with ball mixing system		14097000	78.90
	Ball cartrigde complete · for bath and shower mixers		14096000	78.90
	Service set · service key part of delivery · for mixers with ball mixing systems		13952000	28.20
	Service set without service key		98804000	22.10
	Mixer ball without mouth spray connection unit · for mixers with ball mixing systems		13964000	35.00
	Mixer ball with mouth spray connection unit · for washbasin mixers with ball mixing system		13097000	35.00
	Joystick cartridge complete for AXOR mixer		96339000	55.40
	Cartridge complete with handle for AXOR Starck Classic mixer	Chrome	94004000	127.30

Measurements within scale drawings are in mm.

Mixer spare parts and accessories

		finish	code no.	Euro
	Cartridge complete with handle for AXOR Starck kitchen mixer		95052000	78.90
	Sealing set for AXOR Starck kitchen mixer with swivel spout		95053000	22.10
	Sealing set for Allegra kitchen mixer with swivel spout		96529000	14.40
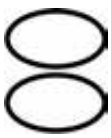	Sealing set for Allegra Linea/ Allegra Solida kitchen mixer with swivel spout		94850000	17.60
	Cartridge for AXOR Arco mixer		11095000	78.90
	Service set for pillar tap		94156000	14.40
Spray former/ aerators				
	Aerator M24x1 with water dimmer 7 l/ min · thread dimension: M24x1 · flow rate: 7 l/ min · usage: bathroom mixer	Chrome Satinox	13085000 13085810	8.90 10.90
	Spray former M24x1 pressureless · thread dimension: M24x1	Chrome	94033000	6.60
	Aerator M28x1 without water dimmer for bath spout and bath mixer · thread dimension: M28x1 · flow rate: 25 l/ min · usage: bathroom mixer	Chrome	13485000	14.40

Measurements within scale drawings are in mm.

Technical specifications and units of measure are subject to change.

		finish	code no.	Euro
	QuickClean aerator M24x1 with water dimmer 7 l/ min · thread dimension: M24x1 · flow rate: 7 l/ min	Chrome	13912000	14.10
	SoftJet Aerator set M24x1 with water dimmer 5 l/ min · thread dimension: M24x1 · packaging unit: 2 pieces		13182000	12.50
	QuickClean aerator M24x1 without water dimmer for kitchen mixer · thread dimension: M24x1 · flow rate: 15 l/ min · usage: kitchen mixer · packaging unit: 10 pieces	Chrome	13913000	10.90
	QuickClean aerator M24x1 without water dimmer for bath spout · thread dimension: M24x1 · flow rate: 25 l/ min · usage: bathroom mixer	Chrome	13914000	11.10
	Aerator M24 x 1 with water dimmer 7 l/ min for AXOR Starck/ AXOR Starck Classic basin mixer · thread dimension: M24x1 · flow rate: 7 l/ min · usage: bathroom mixer	Chrome	94005000	17.60
	Flood jet spray former for AXOR Starck X mixer		97462000	28.20
	Laminar spray former for AXOR Starck X mixer · spray type: laminar spray · flowrate: 7 l/ min · for bathroom mixer		98610000	28.20

Measurements within scale drawings are in mm.

Technical specifications and units of measure are subject to change.

Mixer spare parts and accessories

		finish	code no.	Euro
	Spout complete for AXOR Arco mixer · rotatable spout	Chrome	11098000	67.70
	Interior spout for AXOR Arco mixer		94183000	28.20
Diverters				
	Diverter for bath mixer for concealed installation · <05/87		13970000	55.40
	Diverter complete for bath and shower mixer for concealed installation from 06/1987 · >06/87	Chrome	13971000	67.70
	Diverter complete for AXOR mixer for concealed installation with pipe interrupter	Chrome	13473000	78.90
	Diverter for bath mixer for concealed installation with iBox universal	Chrome	95014000	44.90
	Diverter complete for bath mixer for exposed installation wall-mounted		94077000	28.20
Shut-off units and thermostatic cartridges				
	Shut-off unit spindle · spindle · DN15 · right closing		94142000	22.10
	Ceramic shut-off unit right-closing · ceramic · DN15 · right closing · closing angle: 90°		94009000	28.20

Measurements within scale drawings are in mm.

Technical specifications and units of measure are subject to change.

		finish	code no.	Euro
	Ceramic shut-off unit left-closing · ceramic · DN15 · left closing · closing angle: 90°		94008000	28.20
	Shut-off unit with ceramic valves · ceramic · DN15 · right closing · closing angle: 180°		94149000	22.10
	Non-return valve for thermostatic mixer		92605000	28.20
	Temperature cartridge for thermostatic mixer DN15 · DN15 · wax capsule		92601000	127.30
	Temperature cartridge for thermostatic mixer DN20 · DN20 · wax capsule		92631000	196.30
	MTC temperature control unit for thermostatic mixer · wax capsule		94282000	98.10
	Plastic screw and filter for valve		97592000	17.60
Handles				
	Handle for Allegra Metropol kitchen mixer · handle type: handle · type of fixation: screwed	Chrome	14890000	55.40
	Handle for Allegra Linea/ Solida kitchen mixer	Chrome	14891000	55.40

Measurements within scale drawings are in mm.

Mixer spare parts and accessories

		finish	code no.	Euro
	Handle for Allegra Elegance kitchen mixer	Chrome	33891000	44.90
	Handle for Allegra Slim kitchen mixer	Chrome	31991000	44.90
	Handle for Metropol mixer	Chrome	14091000	55.40
	Handle for Metris mixer	Chrome	31091000	44.90
	Handle for Talis S mixer · handle type: handle · type of fixation: screwed	Chrome	32092000	44.90
	Handle for Talis S basin mixer with (high) swivel spout	Chrome	32095000	44.90
	Handle for Talis E mixer	Chrome	33091000	44.90
	Handle for Focus S mixer · handle type: handle · type of fixation: screwed	Chrome	31793000	35.00
	Handle for Focus E mixer · handle type: handle · type of fixation: screwed	Chrome	31791000	35.00
	Handle for AXOR Uno Color basin-, bidet- and kitchen mixer · handle type: handle · type of fixation: screwed	White Yellow	13290450 13290480	35.00 35.00
	Handle for AXOR Uno Color bath- and shower mixer · handle type: handle · type of fixation: screwed	Red White Yellow Black	13690430 13690450 13690480 13690610	35.00 35.00 35.00 35.00

Measurements within scale drawings are in mm.

Technical specifications and units of measure are subject to change.

		finish	code no.	Euro
	Handle for AXOR Starck Puro kitchen mixer · handle type: handle · type of fixation: screwed	Chrome	10891000	55.40
	Handle for AXOR Starck kitchen mixer · handle type: handle · type of fixation: screwed	Chrome	10890000	55.40
	Handle for AXOR Starck Puro bath- and shower mixer for exposed installation	Chrome	10490000	78.90
	Handle for AXOR Steel kitchen mixer	Stainless Steel	35891800	127.30
	Handle for AXOR Uno kitchen mixer · handle type: handle · type of fixation: screwed	Chrome	14896000	55.40
	Handle for AXOR Allegroh thermostatic mixer for concealed installation · handle type: handle for thermostat · type of fixation: screwed	Chrome	16391000	44.90
	Handle for AXOR Allegroh shut-off valve for concealed installation · handle type: handle for shut off unit · type of fixation: snapped	Chrome	16991000	44.90
	Handle for AXOR Allegroh Trio/ Quattro shut-off/ diverter valve for concealed installation	Chrome	16993000	44.90
	Handle for AXOR Allegroh Novo thermostatic mixer for concealed installation	Chrome	36391000	78.90

Measurements within scale drawings are in mm.

		finish	code no.	Euro
	Handle for AXOR Allegroh Novo shut-off valve for concealed installation · handle type: handle for shut off unit · type of fixation: snapped	Chrome	36991000	44.90
	Handle for Ecostat 1001 sL thermostatic mixer for exposed installation	Chrome	96618000	22.10
	Push button set for Ecostat 1001 thermostatic mixer for exposed installation	Grey	97231000	14.40
	Handle for Excentra Fill/ Flexaplus	Chrome	96083000	22.10
Pull-out sprays				
	Pull-out spray for Allegroh kitchen mixer	Chrome White	13893000 13893450	98.10 98.10
	Pull-out spray for Allegra Linea/ Allegra Metropol kitchen mixer	Chrome	14893000	98.10
	Pull-out spray for Talis S² Variarc kitchen mixer	Chrome	96920000	78.90
	Pull-out spout for Talis S² Variarc kitchen mixer	Chrome	96919000	55.40
	**AXOR Steel** Pull-out spray for AXOR Steel kitchen mixer	Stainless Steel	35893800	196.30
Escutcheons and flanges				
	Escutcheon for AXOR Allegroh shower mixer for concealed installation	Chrome	94272000	55.40

Measurements within scale drawings are in mm.

Technical specifications and units of measure are subject to change.

		finish	code no.	Euro
	Flange for Metropol basin mixer	Chrome	94130000	14.40
	Flange for bath mixer for concealed installation	Chrome	13981000	35.00
	Wall escutcheon for AXOR Uno bath- and shower mixer for exposed installation · dimension: Ø 68 mm	Chrome	96467000	14.40
	Wall escutcheon for Metropol bath mixer for exposed installation	Chrome	94135000	8.90

Mixer accessories

 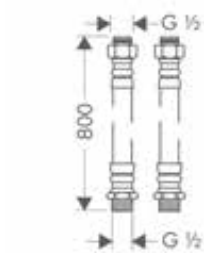	Connection tube set for 2-hole rim mounted thermostatic bath mixer		96387000	55.60
 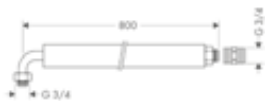	Flexible connection tube 80 cm · length 800 mm · version: 90° angle		58192000	109.70
 	Connection tube for 2-hole rim mounted thermostatic bath mixer · length: 600 mm · thread dimension: G ½ x G ½		96396000	30.20

Measurements within scale drawings are in mm.

Other mixer spare parts

		finish	code no.	Euro
	Screw cover	Chrome	94063000	6.60
	Connection hose for shower column M10 x G ⅜ · length: 450 mm · thread dimension: M10 x G ⅜		96507000	28.20
	Connection hose 450 mm for plugging · length: 450 mm · thread dimension: M8 x G ⅜		94076000	22.10
	Diverter knob for bath mixer for exposed installation	Chrome	94078000	10.90
 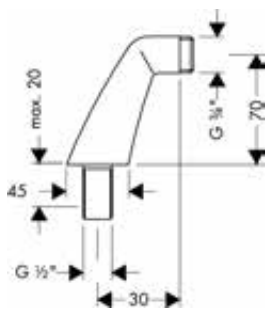	Pillar unions for rim mounted bath mixer	Chrome	14920000	128.70
	Adapter piece with screw for handle fixation		94184000	4.10
	Non-return valve · packaging unit: 2 pieces		94074000	10.90
	Dirt filter for Ecostat thermostatic mixer		95039000	4.10
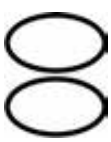	Sealing set for Allegra Linea/ Allegra Solida kitchen mixer with swivel spout		94850000	17.60
 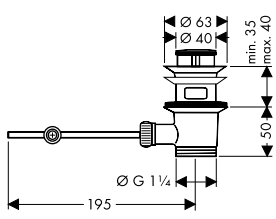	Waste set pop-up for basin and bidet mixers · operation via pull-rod · for basins with overflow hole · brass · drain plug material brass · connection dimension G 1¼	Chrome Brushed Bronze Brushed Black Chrome Matt Black Matt White Polished Gold Optic	94139000 94139140 94139340 94139670 94139700 94139990	63.70 118.40 118.40 118.40 118.40 95.70

Measurements within scale drawings are in mm.

Technical specifications and units of measure are subject to change.

	finish	code no.	Euro
 Converter complete		96100000	4.10
 Lever arm 340 mm		96324000	17.60
Pull-rod complete	Chrome White	92620000 92620450	22.10 35.00
 Pull-rod universal	Chrome Stainless Steel	96657000 96657800	8.90 17.60
 Fixation set complete		96016000	22.10
  Shaft fixation set for mixer · diameter: 32 mm · thread dimension: M33x1.5		13961000	17.60
 Special ball-S-union set		13988000	98.10
 Ball-S-union set · centre distance: 150 ± 16 mm · packaging unit: 2 pieces · thread dimension: G ½ x M36x1.5		13989000	28.20
 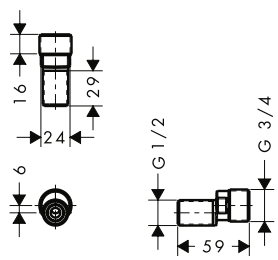 S-union set		94140000	35.00

Measurements within scale drawings are in mm.

Mixer spare parts and accessories

		finish	code no.	Euro
	O-ring 35 x 2.5 mm		96006000	2.50
	O-ring 48 x 7.25 mm		98003000	2.50
	O-ring 36 x 3.5 mm		98066000	2.50
	O-ring 34 x 3 mm		98069000	2.50
	Seal DN32		53971000	2.50
	Wedge-shaped seal DN32		53985000	2.50
	Nylon hose for kitchen mixer 1.25 m		95048000	55.40
	Metal hose for kitchen mixer		96200000	44.90
	Secuflex metal shower hose for 3-hole rim mounted/ tile mounted bath mixer		94129000	67.70
	Secuflex metal shower hose for 4-hole rim mounted/ tile mounted bath mixer · length: 2000 mm · maximum pull-out length : 1100 mm · thread dimension: G ½ x G ½	Chrome	94148000	55.40

Measurements within scale drawings are in mm.

Technical specifications and units of measure are subject to change.

	finish	code no.	Euro
 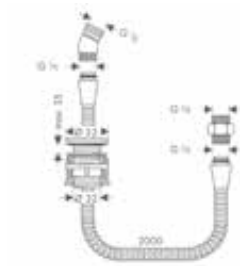 **Shower holder rim mounted** · consists of: shower holder, shower hose · maintenance opening required	Chrome	28307000	107.40
 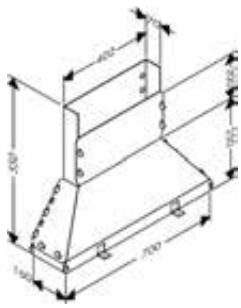 Secuflex box		28389000	44.90
 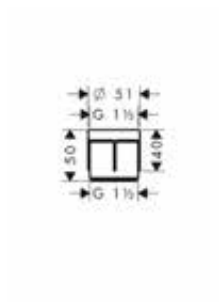 Secuflex insert extension		98806000	4.10
 Fixing set for shut-off valve for concealed installation		96392000	22.10
 Thumb plug complete	Chrome White Satin Chrome	96026000 96026450 96026880	17.60 28.20 22.10
 Thumb plug large	Chrome Stainless Steel	96027000 96027800	17.60 28.20
 Safety plug for Excentra Fill/ Flexaplus	Chrome	96153000	22.10
 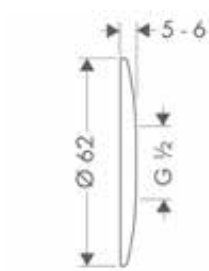 Wall flange · material: brass · connection dimension DN15 · packaging unit: 100 pieces · Price refers to 1 piece	Chrome	06010000	2.60

Measurements within scale drawings are in mm.

Mixer spare parts and accessories

	finish	code no.	Euro
 Hose connection for Ecostat thermostatic shower mixer for exposed installation		98556000	22.10

Measurements within scale drawings are in mm.

Technical specifications and units of measure are subject to change.

Flow diagrams

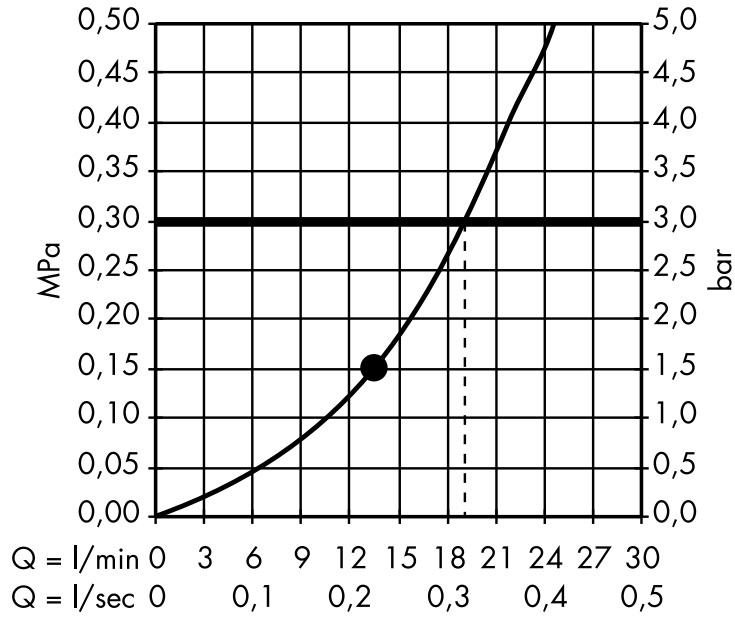

Hand showers	page 714	Overhead showers	page 720
Body showers	page 732	Showerpipes and shower panels	page 732

The consumption was measured in combination with the appropriate fittings (thermostat/mixer/in-wall valve) to reflect actual application in practice.

Hand showers

· **Rainfinity** Hand shower 130 3jet
 # 26864000, 26864140, 26864340, 26864670, 26864700, 26864990

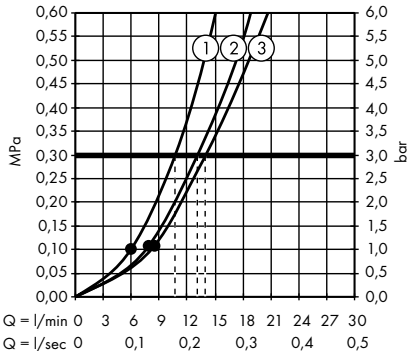

1. Mono
2. Intense PowderRain
3. PowderRain

· **Rainfinity** Hand shower 130 3jet EcoSmart
 # 26865000, 26865140, 26865340, 26865670, 26865700, 26865990

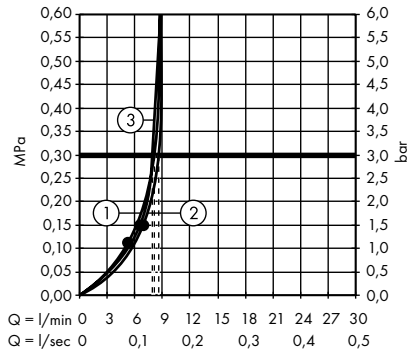

1. Mono
2. Intense PowderRain
3. PowderRain

· **Rainfinity** Baton hand shower 100 1jet
 # 26866000, 26866140, 26866340, 26866670, 26866700, 26866990

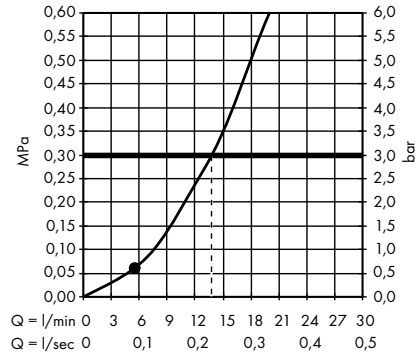

· **Rainfinity** Baton hand shower 100 1jet EcoSmart
 # 26867000, 26867140, 26867340, 26867670, 26867700, 26867990

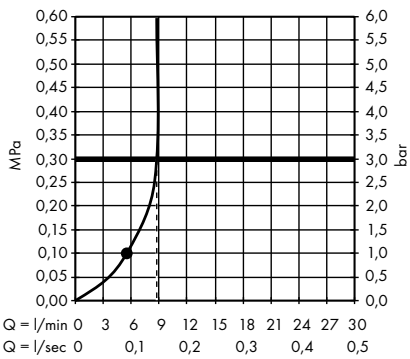

· **Raindance Select E** Hand shower 150 3jet
 # 26550000, 26550400

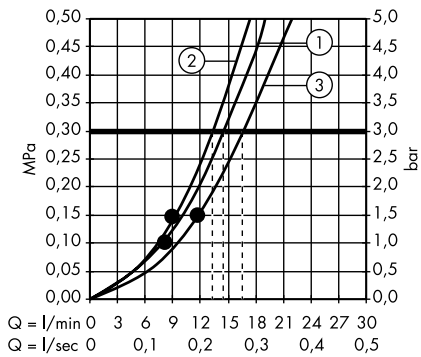

1. RainAir
2. CaresseAir
3. Mix

· **Raindance Select E** Hand shower 150 3jet EcoSmart 9 l/ min
 # 26551000, 26551400

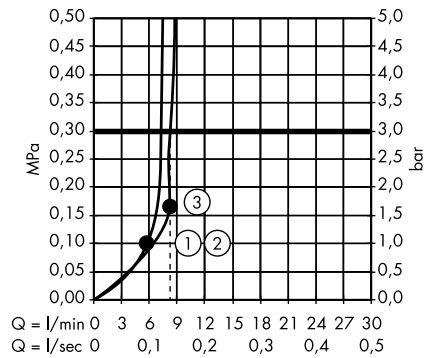

1. RainAir
2. CaresseAir
3. Mix

· **Raindance Select E** Hand shower 120 3jet
 # 26520000, 26520140, 26520340, 26520400, 26520670, 26520700, 26520990

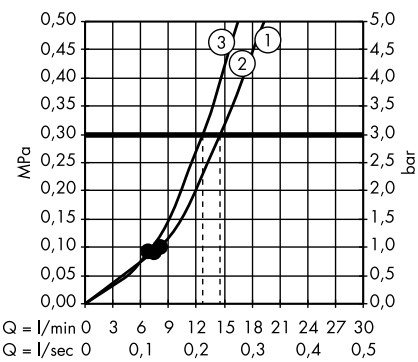

1. RainAir
2. Rain
3. WhirlAir

· **Raindance Select E** Hand shower 120 3jet EcoSmart 9 l/ min
 # 26521000, 26521400

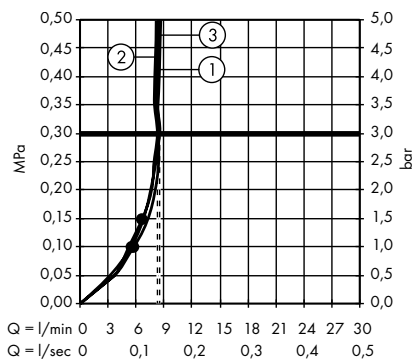

1. RainAir
2. WhirlAir
3. Rain

· **Raindance Select S** Hand shower 150 3jet
 # 28587000, 28587400

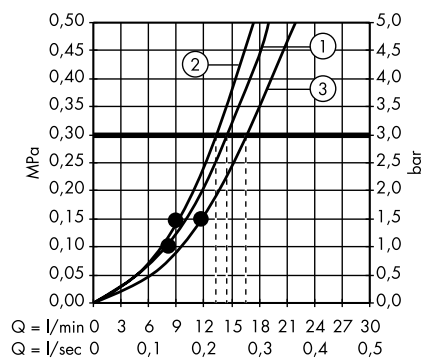

1. RainAir
2. CaresseAir
3. Mix

· **Raindance Select S** Hand shower 150 3jet EcoSmart 9 l/ min
 # 28588000, 28588400

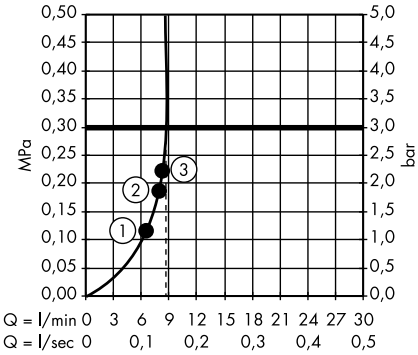

1. RainAir
2. CaresseAir
3. Mix

· **Raindance Select S** Hand shower 120 3jet PowderRain
 # 26014000, 26014140, 26014340, 26014670, 26014700, 26014990

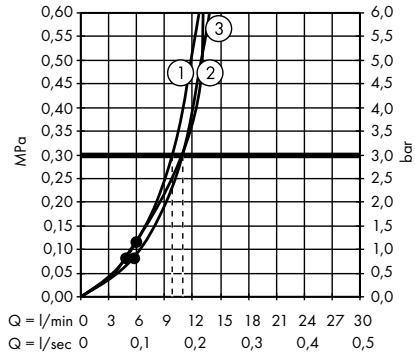

1. WhirlAir
2. PowderRain
3. Rain

· **Raindance Select S** Hand shower 120 3jet
 # 26530000, 26530140, 26530340, 26530400, 26530670, 26530700, 26530990

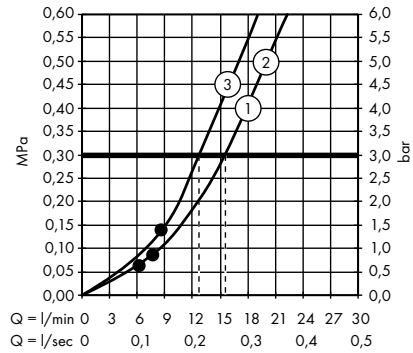

1. RainAir
2. Rain
3. WhirlAir

· **Raindance Select S** Hand shower 120 3jet EcoSmart 9 l/ min
 # 26531XXX

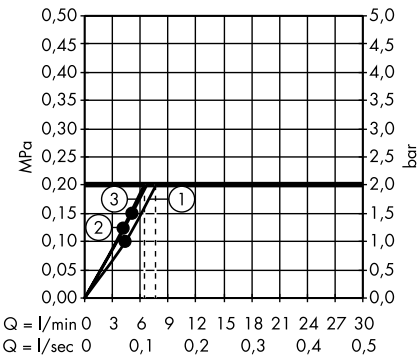

1. RainAir
2. WhirlAir
3. Rain

· **Pulsify Select S** Hand shower 105 3jet Activation
 # 24100000, 24100670, 24100700

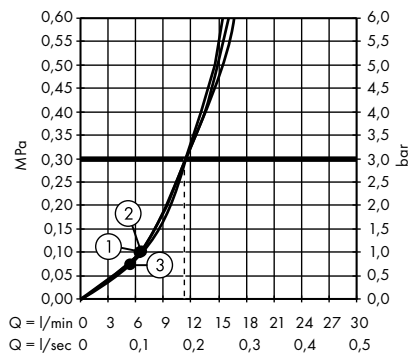

1. Mono
2. PowderRain
3. IntenseRain

· **Pulsify Select S** Hand shower 105 3jet Activation EcoSmart
 # 24101000, 24101670, 24101700

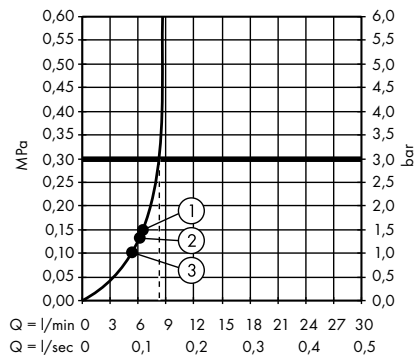

1. PowderRain
2. Mono
3. IntenseRain

· **Pulsify Select S** Hand shower 105 3jet Relaxation
 # 24110000, 24110670, 24110700

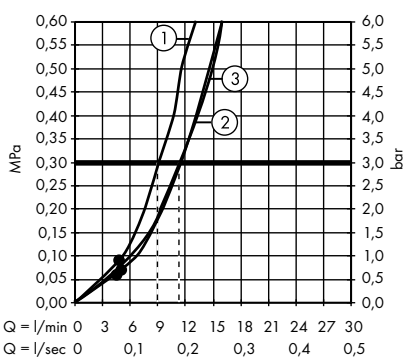

1. Massage
2. PowderRain
3. IntenseRain

· **Pulsify Select S** Hand shower 105 3jet Relaxation EcoSmart
 # 24111000, 24111670, 24111700

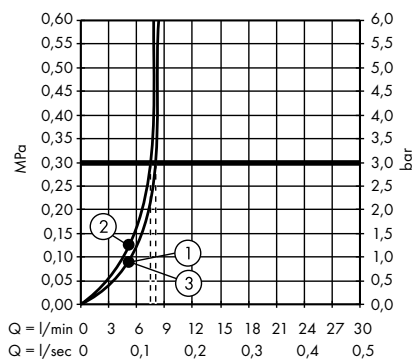

1. PowderRain
2. Massage
3. IntenseRain

· **Pulsify S** Hand shower 105 1jet
 # 24120000, 24120670, 24120700

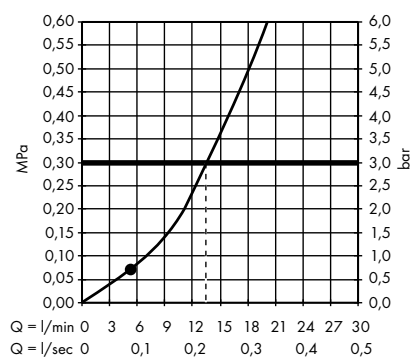

The consumption was measured in combination with the appropriate fittings (thermostat/mixer/in-wall valve) to reflect actual application in practice.

· **Pulsify S** Hand shower 105 1jet Green
 # 24121000, 24121670, 24121700

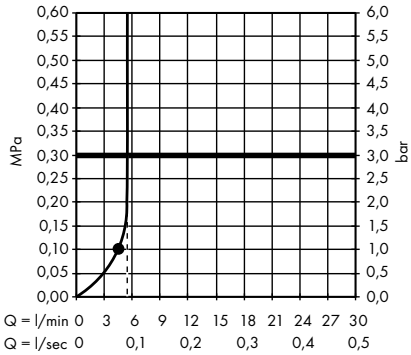

· **Croma Select E** Hand shower Multi
 # 26810400

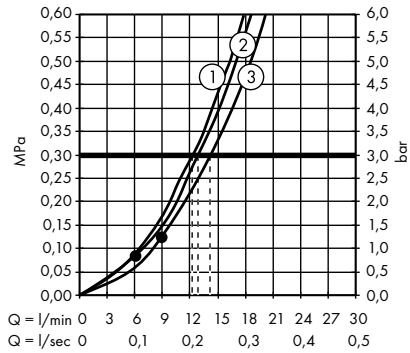

1. Massage
2. IntenseRain
3. SoftRain

· **Croma Select E** Hand shower Multi EcoSmart 9 l/ min
 # 26811400

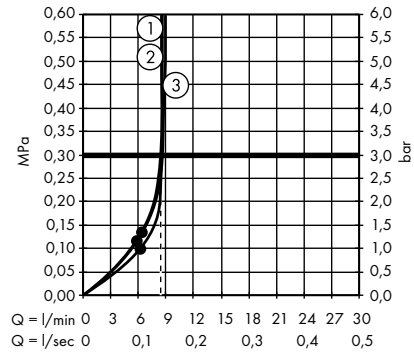

1. IntenseRain
2. Massage
3. SoftRain

· **Croma Select E** Hand shower Vario
 # 26812400

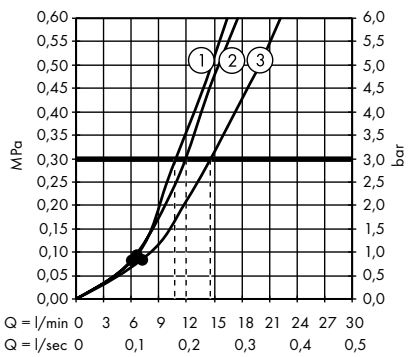

1. TurboRain
2. IntenseRain
3. Rain

· **Croma Select E** Hand shower Vario EcoSmart 9 l/ min
 # 26813400

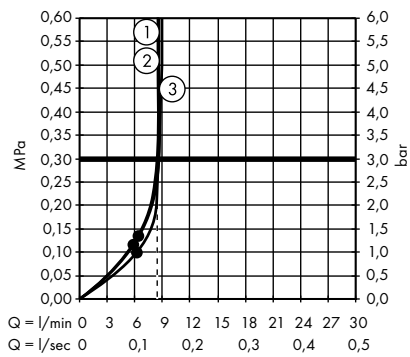

1. TurboRain
2. IntenseRain
3. Rain

· **Croma E** Hand shower 1jet
 # 26814140, 26814340, 26814400, 26814670, 26814700, 26814990

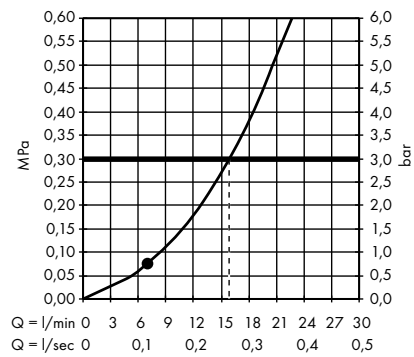

· **Croma E** Hand shower 1jet EcoSmart 9 l/ min
 # 26815140, 26815340, 26815400, 26815670, 26815700, 26815990

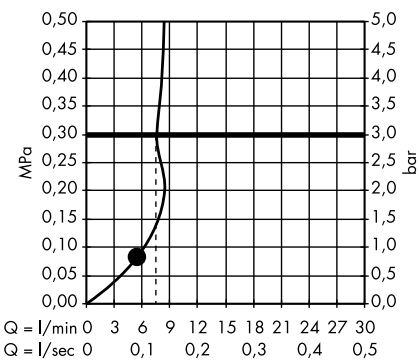

· **Croma E** Hand shower 1jet EcoSmart 7 l/ min
 # 26816400

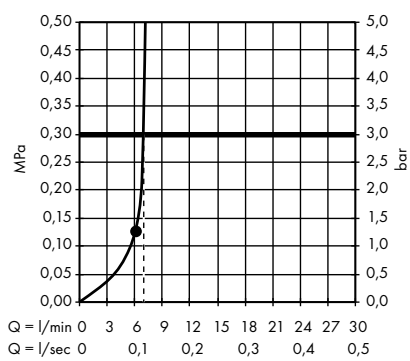

· **Croma Select S** Hand shower Multi
 # 26800400

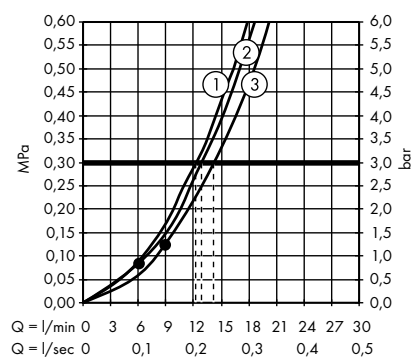

1. Massage
2. IntenseRain
3. SoftRain

· **Croma Select S** Hand shower Multi EcoSmart 9 l/ min
 # 26801400

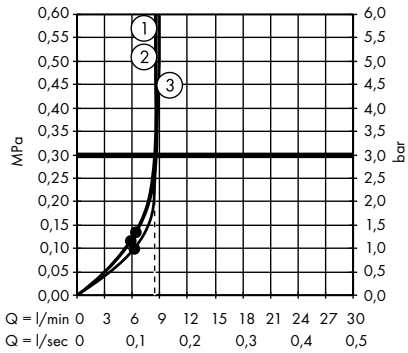

1. IntenseRain
2. Massage
3. SoftRain

· **Croma Select S** Hand shower Vario
 # 26802400

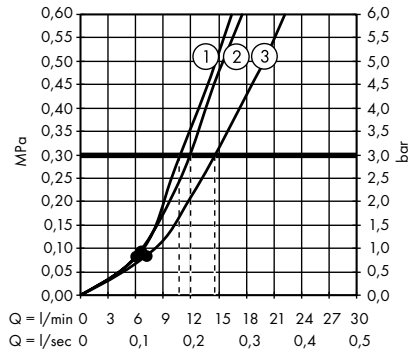

1. TurboRain
2. IntenseRain
3. Rain

· **Croma Select S** Hand shower Vario EcoSmart 9 l/ min
 # 26803400

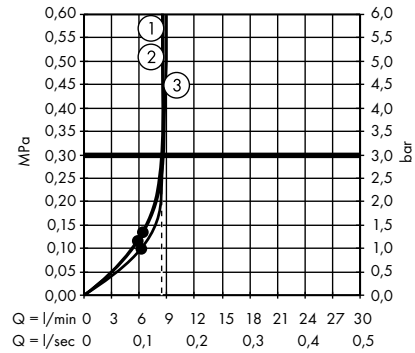

1. TurboRain
2. IntenseRain
3. Rain

· **Croma S** Hand shower 1jet
 # 26804400

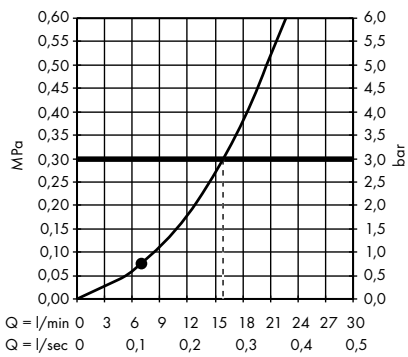

· **Croma S** Hand shower 1jet EcoSmart 9 l/ min
 # 26805400

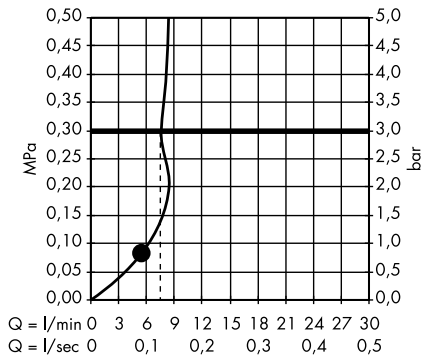

· **Croma S** Hand shower 1jet EcoSmart 7 l/ min
 # 26806400

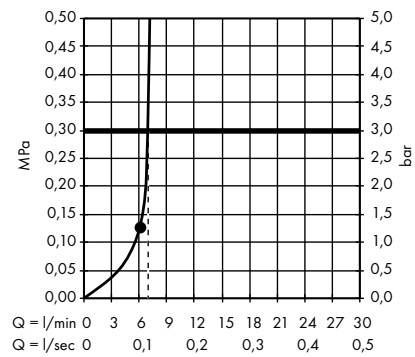

· **Raindance Classic** Hand shower 100 3jet
 # 28548000, 28548090

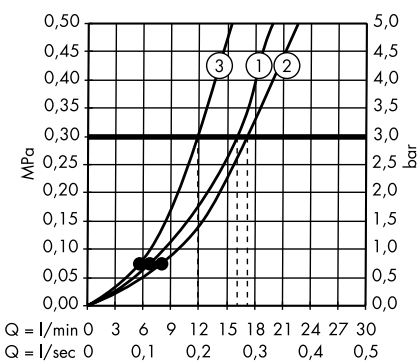

1. RainAir
2. WhirlAir
3. BalanceAir

· **Croma 100** Hand shower Multi
 # 28536000, 28536430, 28536450, 28536460, 28536610, 28536710, 28536810, 28536880

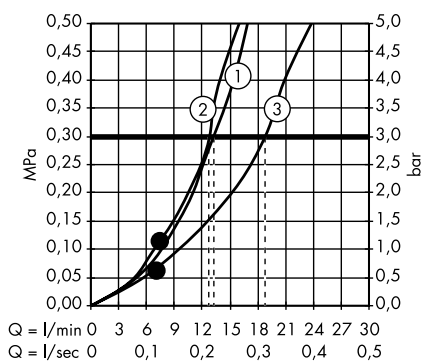

1. Mono
2. Massage
3. Rain

· **Croma 100** Hand shower Multi EcoSmart 9 l/ min
 # 28538000

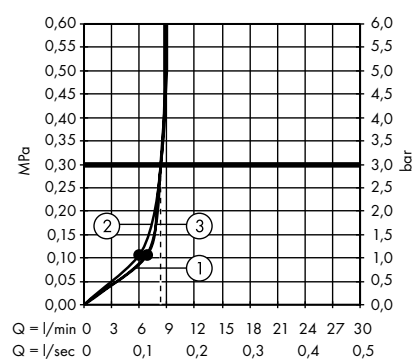

1. Massage
2. Mono
3. Rain

The consumption was measured in combination with the appropriate fittings (thermostat/mixer/in-wall valve) to reflect actual application in practice.

· **Croma 100** Hand shower Vario
 # 28535000

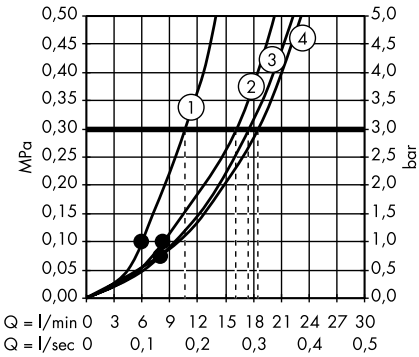

1. Massage
2. Shampoo
3. Normal
4. Rain

· **Croma 100** Hand shower Vario EcoSmart 9 l/ min
 # 28537000

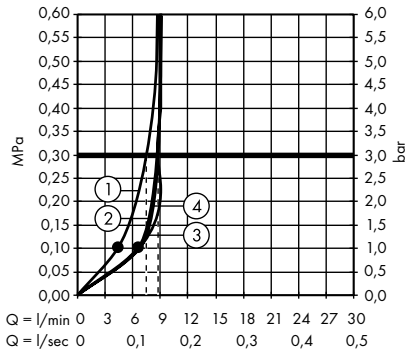

1. Massage
2. Shampoo
3. Normal
4. Rain

· **Croma 100** Hand shower 1jet
 # 28580000

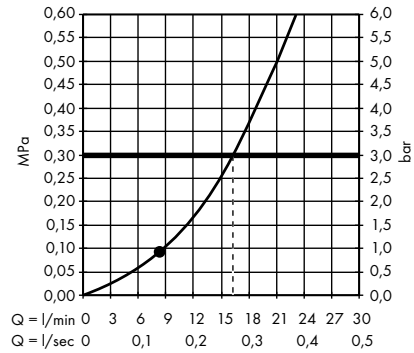

· **Croma 100** Hand shower Mono EcoSmart 9 l/ min
 # 28583000

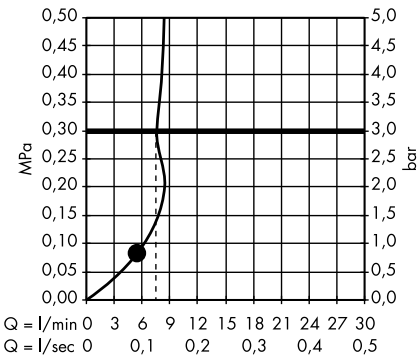

· **Croma 100 Classic** Hand shower Multi
 # 28539000

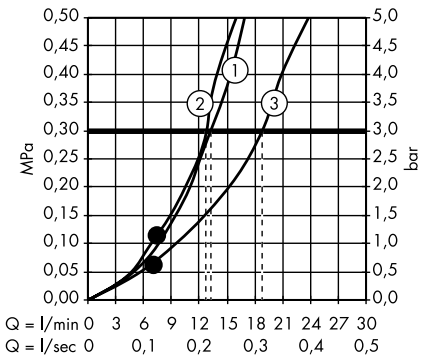

1. Mono
2. Massage
3. Rain

· **Crometta** Hand shower Vario
 # 26330400

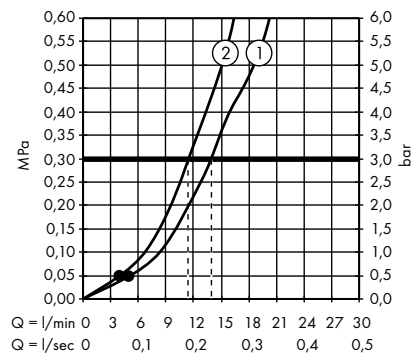

1. Rain
2. IntenseRain

· **Crometta** Hand shower Vario Green 6 l/ min
 # 26336400

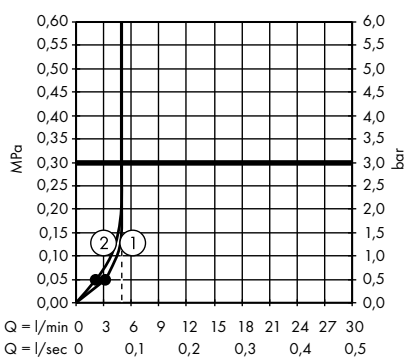

1. Rain
2. IntenseRain

· **Crometta** Hand shower Vario EcoSmart 9 l/ min
 # 26332400

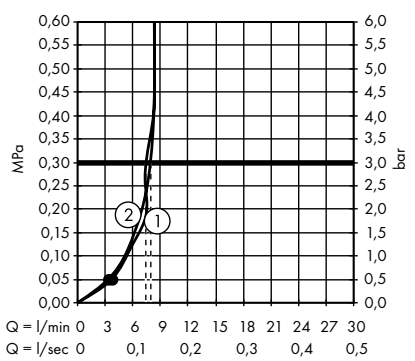

1. Rain
2. IntenseRain

· **Crometta** Hand shower 1jet
 # 26331400

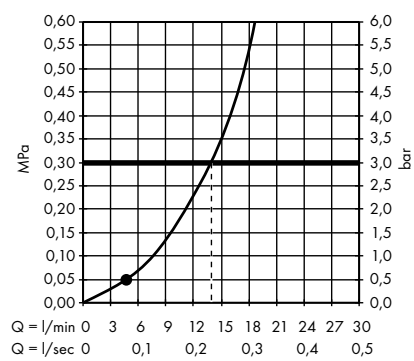

· **Crometta** Hand shower 1jet Green 6 l/ min
 # 26334400

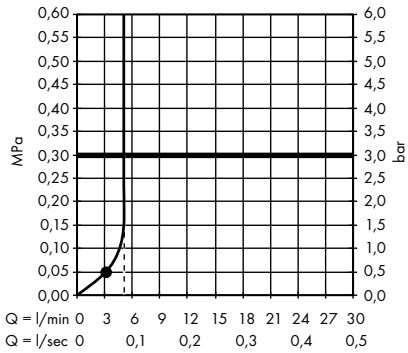

· **Crometta** Hand shower 1jet EcoSmart 9 l/ min
 # 26333400

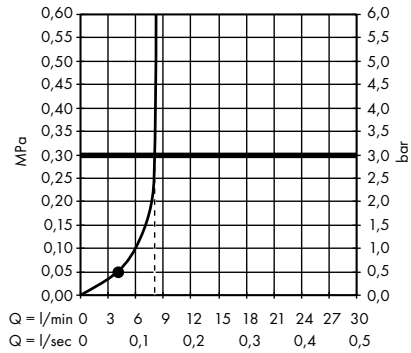

· **Crometta 85** Hand shower Multi
 # 28563000

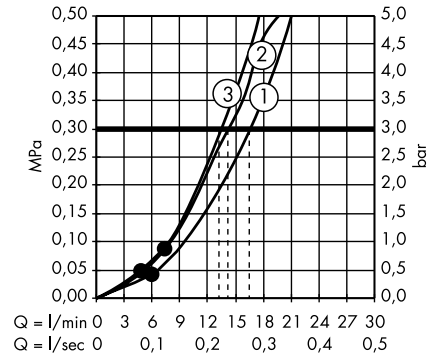

1. Normal
2. Massage
3. Mono

· **Crometta 85** Hand shower Vario
 # 28562000

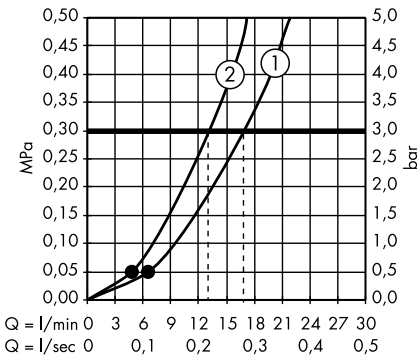

1. Normal
2. Vario

· **Crometta 85** Hand shower Mono
 # 28585000

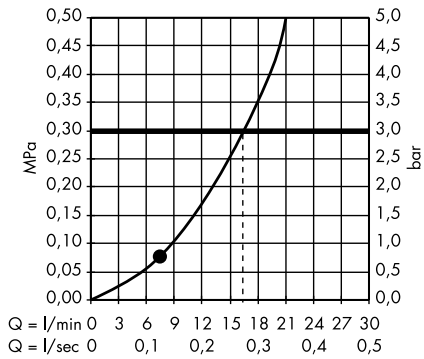

· **Crometta 85** Hand shower Mono Green 6 l/ min
 # 28561000

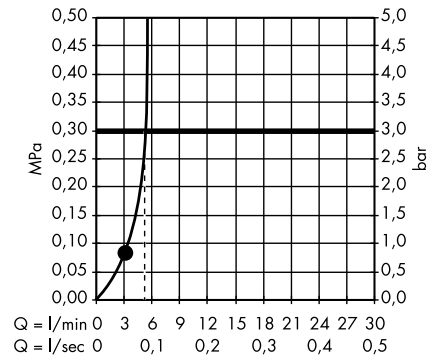

· **Vernis Blend** Hand shower Vario
 # 26270000, 26270670

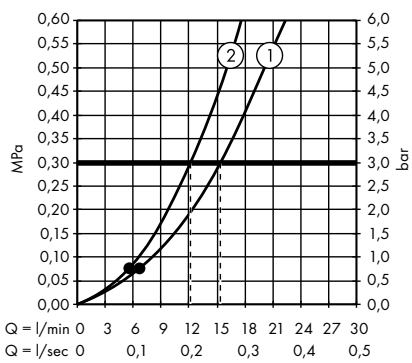

1. Rain
2. IntenseRain

· **Vernis Blend** Hand shower Vario EcoSmart
 # 26340000, 26340670

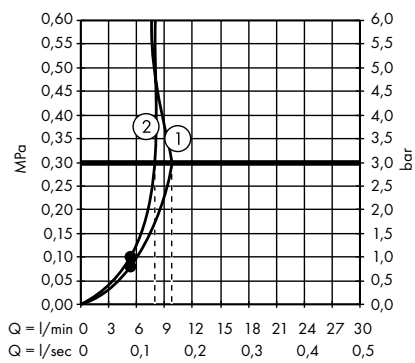

1. Rain
2. IntenseRain

· **Vernis Blend** Hand shower Vario Green
 # 26090000

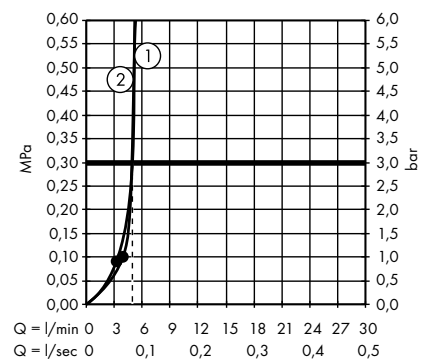

1. Rain
2. IntenseRain

The consumption was measured in combination with the appropriate fittings (thermostat/mixer/in-wall valve) to reflect actual application in practice.

· **Jocolino** Children hand shower crocodile 2jet
 # 28788570

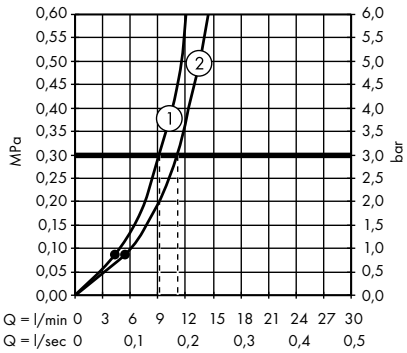

1. Rain
2. Mono spray

· **Jocolino** Children hand shower lion 2jet
 # 28760210

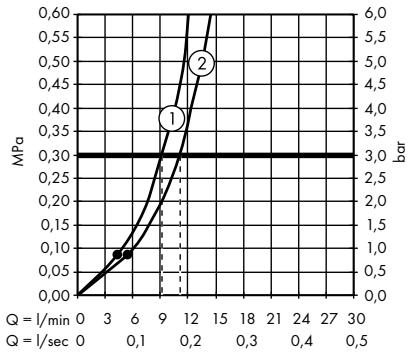

1. Rain
2. Mono spray

· **Jocolino** Children hand shower zebra 2jet
 # 28787640

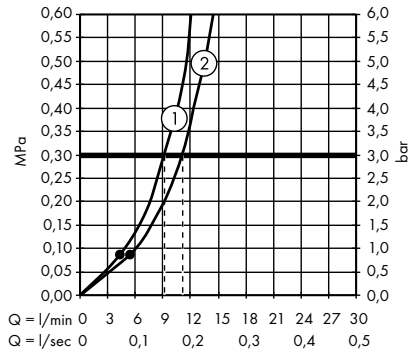

1. Rain
2. Mono spray

· **DogShower** Dogs hand shower 150 3jet Select
 # 26640540, 26640560, 26640670, 26640700

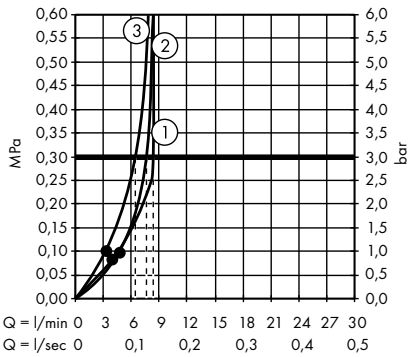

1. paw spray
2. leg spray
3. fur spray

· Bidette hand shower 1jet with shower holder and pressure shower hose 125 cm
 # 32129000

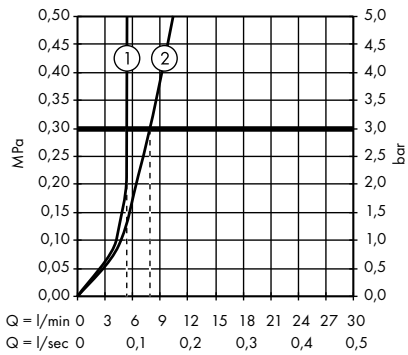

1. With flow limiter
2. Without flow limiter

· Bidette hand shower 1jet with shower holder and pressure shower hose 160 cm
 # 32128000

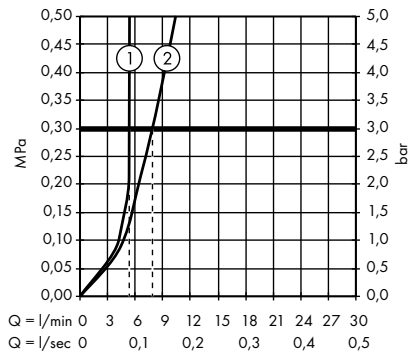

1. With flow limiter
2. Without flow limiter

· Bidette hand shower 1jet with shower holder and pressure resistant shower hose 125 cm
 # 32127000

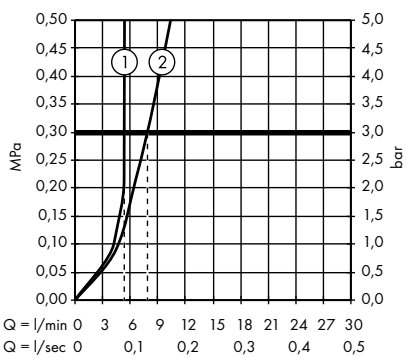

1. With flow limiter
2. Without flow limiter

Overhead showers

· **Rainfinity** Overhead shower 250 1jet with wall connector
 # 26226000, 26226700

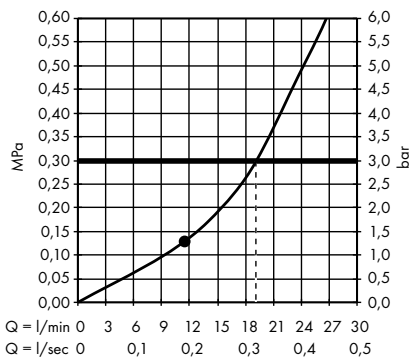

· **Rainfinity** Overhead shower 250 1jet EcoSmart with wall connector
 # 26227000, 26227700

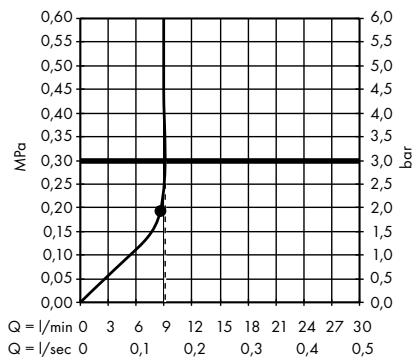

· **Rainfinity** Overhead shower 250 1jet
 # 26228000, 26228140, 26228340, 26228670, 26228700, 26228990

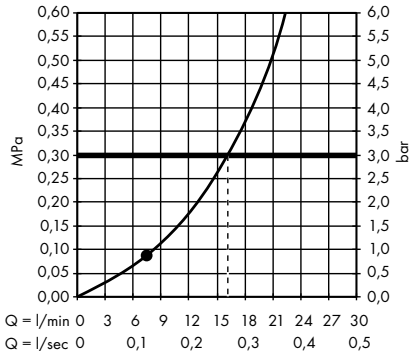

· **Rainfinity** Overhead shower 250 1jet EcoSmart
 # 26229000, 26229140, 26229340, 26229670, 26229700, 26229990

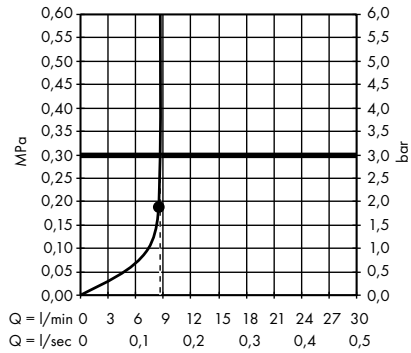

· **Rainfinity** Overhead shower 360 1jet with wall connector
 # 26230000, 26230140, 26230340, 26230670, 26230700, 26230990

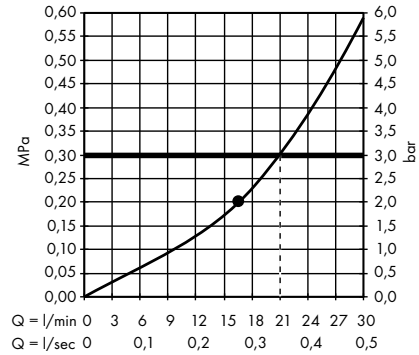

· **Rainfinity** Overhead shower 360 1jet
 # 26231000, 26231140, 26231340, 26231670, 26231700, 26231990

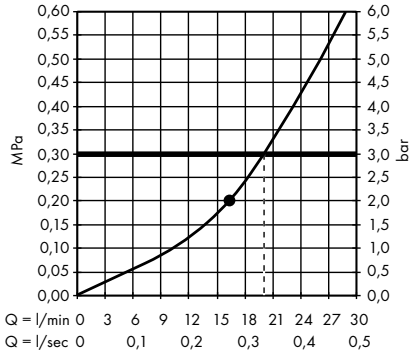

· **Rainfinity** Overhead shower 250 3jet with wall connector
 # 26232000, 26232700

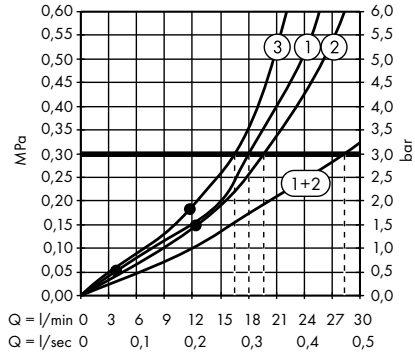

1. Intense PowderRain
2. PowderRain
3. RainStream

· **Rainfinity** Overhead shower 250 3jet EcoSmart with wall connector
 # 26233000, 26233700

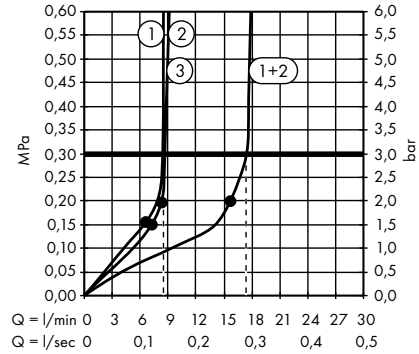

1. RainStream
2. PowderRain
3. Intense PowderRain

· **Rainfinity** Overhead shower 360 3jet with wall connector
 # 26234000, 26234140, 26234340, 26234670, 26234700, 26234990

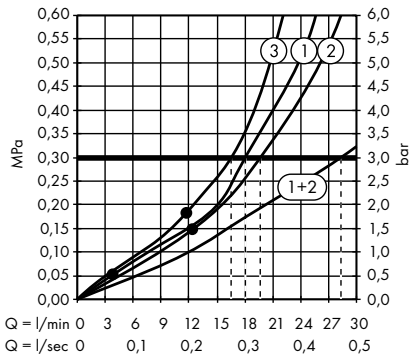

1. Intense PowderRain
2. PowderRain
3. RainStream

· **Rainmaker Select** Overhead shower 580 3jet
 # 24001400, 24001600

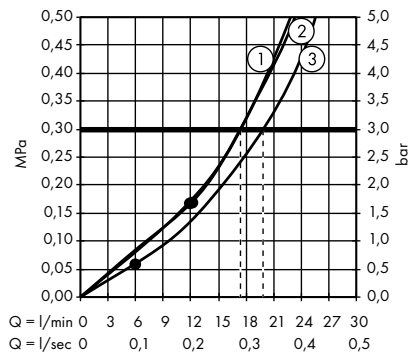

1. Rain
2. Rainflow
3. Mono

· **Rainmaker Select** Overhead shower 580 3jet EcoSmart 9 l/ min
 # 24011400

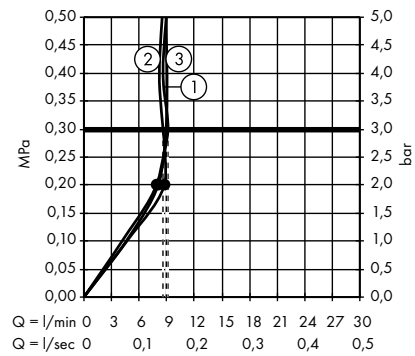

1. Rain
2. Rainflow
3. Mono

The consumption was measured in combination with the appropriate fittings (thermostat/mixer/in-wall valve) to reflect actual application in practice.

· **Rainmaker Select** Overhead shower 460 3jet with shower arm
 # 24007400, 24007600

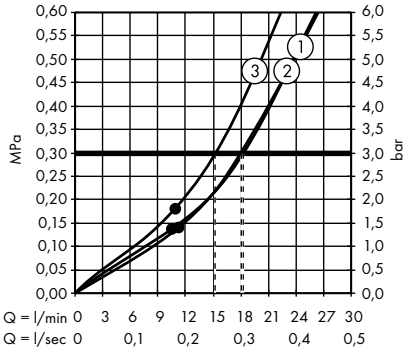

1. Mono
2. Rain
3. RainStream

· **Rainmaker Select** Overhead shower 460 3jet EcoSmart 9 l/ min with shower arm
 # 24017400

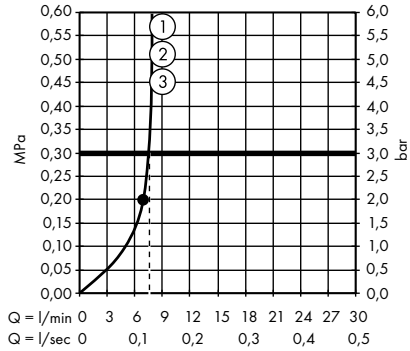

· **Rainmaker Select** Overhead shower 460 3jet with ceiling connector
 # 24006400, 24006600

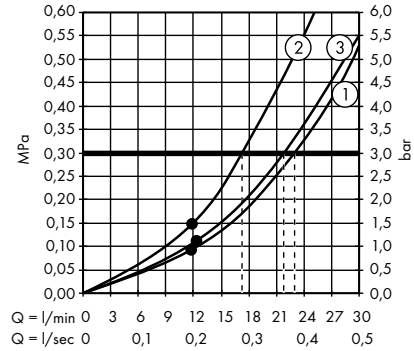

1. Mono
2. Rain
3. RainStream

· **Rainmaker Select** Overhead shower 460 3jet EcoSmart 9 l/ min with ceiling connector
 # 24016400

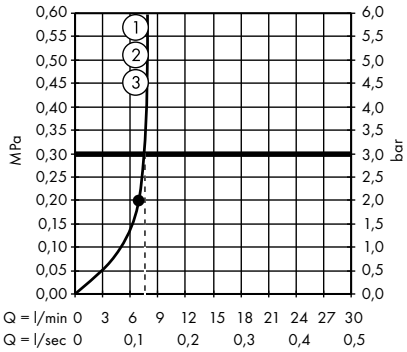

1. Rain
2. RainStream
3. Mono

· **Rainmaker Select** Overhead shower 460 2jet with shower arm
 # 24005400, 24005600

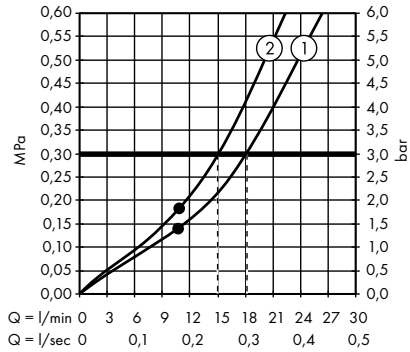

1. Rain
2. RainStream

· **Rainmaker Select** Overhead shower 460 2jet EcoSmart 9 l/ min with shower arm
 # 24015400

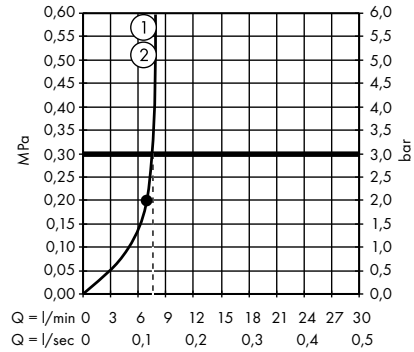

1. Rain
2. RainStream

· **Rainmaker Select** Overhead shower 460 2jet with ceiling connector
 # 24004400, 24004600

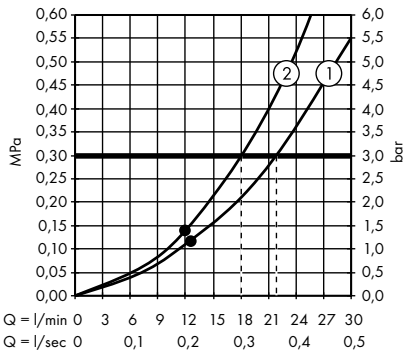

1. Rain
2. RainStream

· **Rainmaker Select** Overhead shower 460 2jet EcoSmart 9 l/ min with ceiling connector
 # 24014400

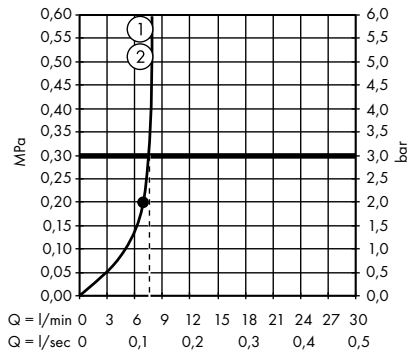

1. Rain
2. RainStream

· **Rainmaker Select** Overhead shower 460 1jet with shower arm
 # 24003400, 24003600

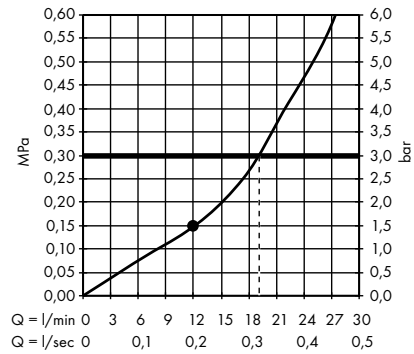

· **Rainmaker Select** Overhead shower 460 1jet EcoSmart 9 l/ min with shower arm
 # 24013400

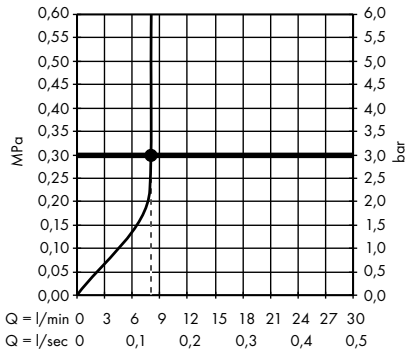

· **Rainmaker Select** Overhead shower 460 1jet with ceiling connector
 # 24002400, 24002600

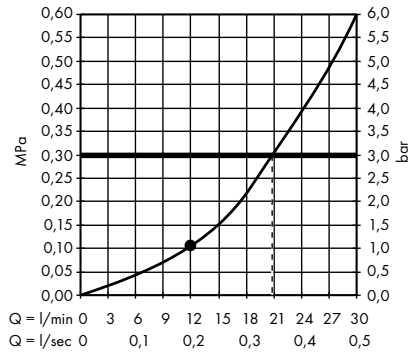

· **Rainmaker Select** Overhead shower 460 1jet EcoSmart 9 l/ min with ceiling connector
 # 24012400

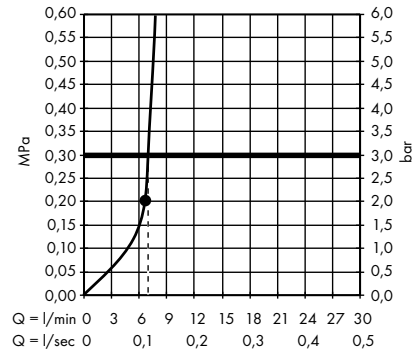

· **Raindance Select S** Overhead shower 300 2jet with ceiling connector
 # 27337000, 27337400

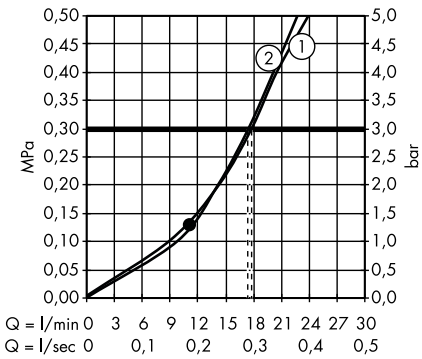

1. Rain
2. RainAir

· **Raindance Select S** Overhead shower 300 2jet with shower arm
 # 27378000, 27378400

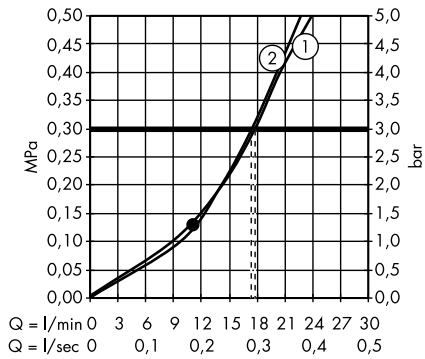

1. Rain
2. RainAir

· **Raindance Select S** Overhead shower 240 2jet with ceiling connector
 # 26467000, 26467400

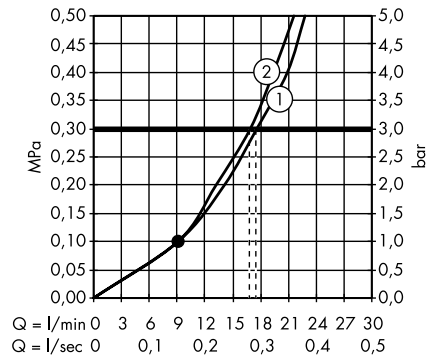

1. Rain
2. RainAir

· **Raindance Select S** Overhead shower 240 2jet EcoSmart 9 l/ min with ceiling connector
 # 26469000

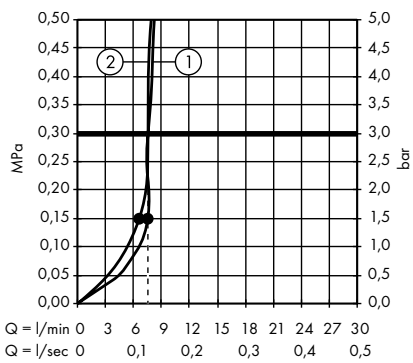

1. Rain
2. RainAir

· **Raindance Select S** Overhead shower 240 2jet with shower arm
 # 26466000, 26466400

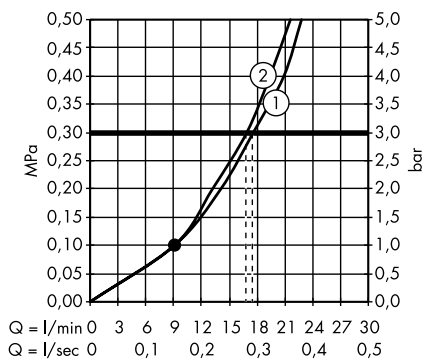

1. Rain
2. RainAir

· **Raindance Select S** Overhead shower 240 2jet EcoSmart 9 l/ min with shower arm
 # 26470000, 26470400

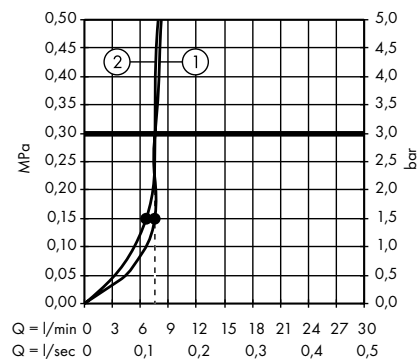

1. Rain
2. RainAir

The consumption was measured in combination with the appropriate fittings (thermostat/mixer/in-wall valve) to reflect actual application in practice.

· **Croma Select E** Overhead shower 180 2jet
 # 26524000, 26524400

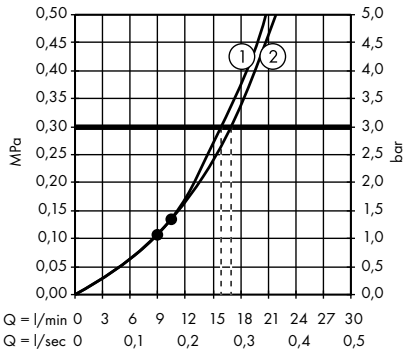

1. IntenseRain
2. Rain

· **Croma Select E** Overhead shower 180 2jet EcoSmart 9 l/ min
 # 26528000, 26528400

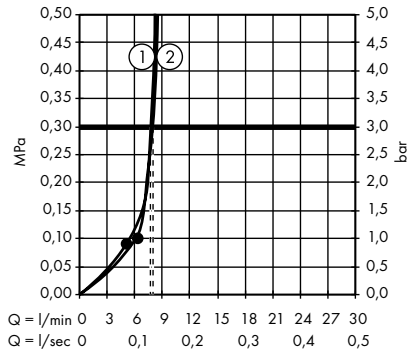

1. IntenseRain
2. Rain

· **Croma Select S** Overhead shower 180 2jet
 # 26522000, 26522400

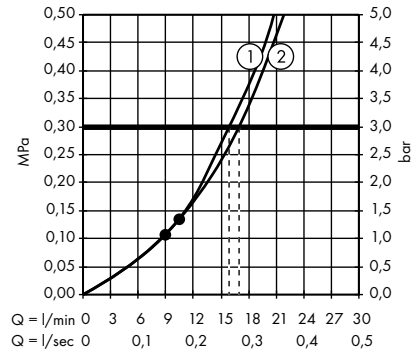

1. IntenseRain
2. Rain

· **Croma Select S** Overhead shower 180 2jet EcoSmart 9 l/ min
 # 26523000

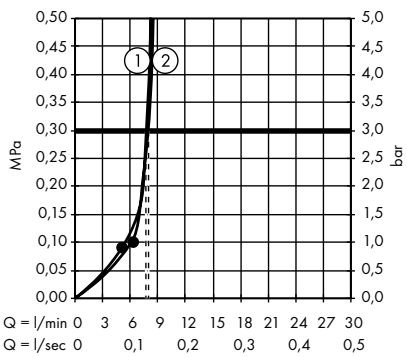

1. IntenseRain
2. Rain

· **Raindance Rainmaker** Overhead shower 680/460 3jet with lighting
 # 28418000

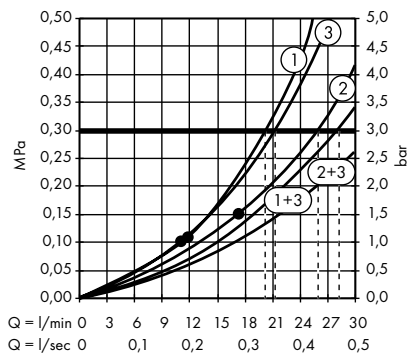

1. RainAir
2. RainAir XXL
3. WhirlAir

· **Raindance Rainmaker** Overhead shower 600 3jet with lighting
 # 26117000

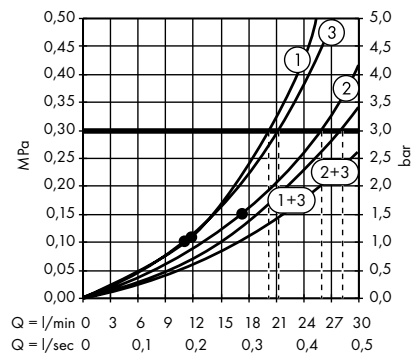

1. RainAir
2. RainAir XXL
3. WhirlAir

· **Raindance** Overhead shower 260/260 1jet
 # 26472000

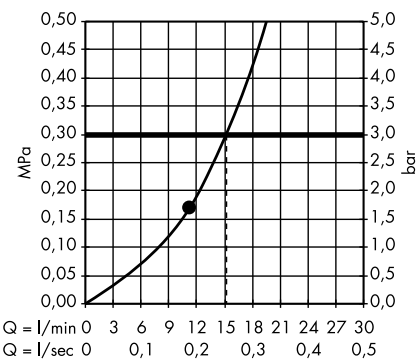

· **Raindance** Overhead shower 260/260 1jet EcoSmart 9 l/ min
 # 26481000

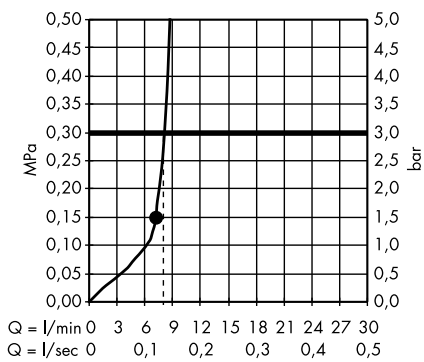

· **Raindance Rainfall** Overhead shower 180 2jet
 # 28433000, 28433400

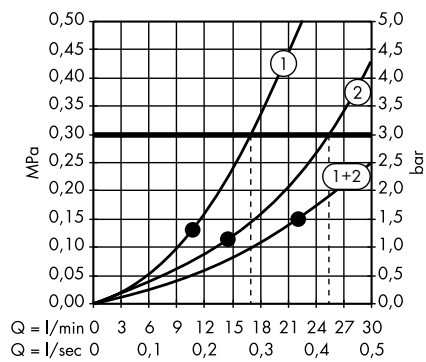

1. RainAir
2. Rainflow

· **Raindance Rainfall** Overhead shower 150 1jet stream
 # 26443000

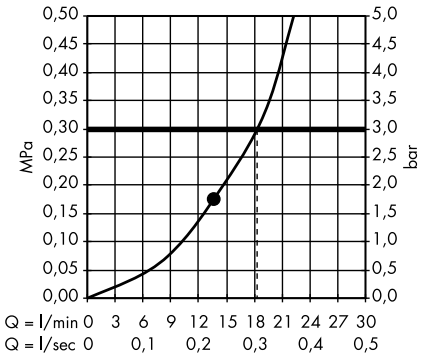

· **Raindance Rainfall** Overhead shower 150 1jet
 # 26442000

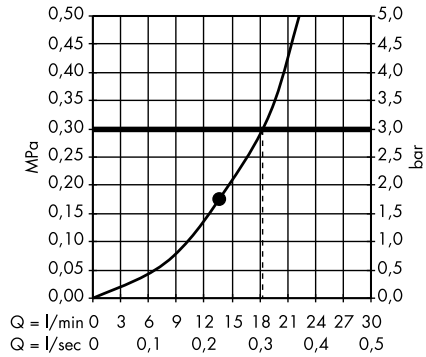

· **Raindance E** Overhead shower 300 1jet with shower arm
 # 26238000, 26238140, 26238340, 26238670, 26238700, 26238990

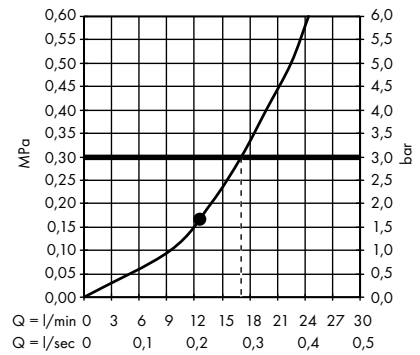

· **Raindance E** Overhead shower 300 1jet EcoSmart 9 l/ min with shower arm
 # 26239000

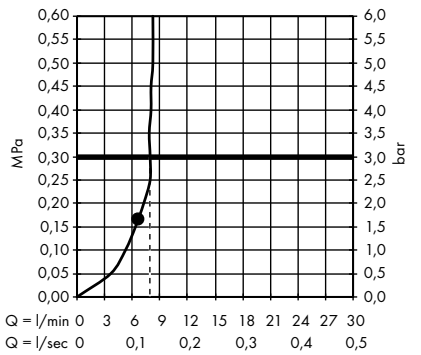

· **Raindance E** Overhead shower 300 1jet with ceiling connector
 # 26250000, 26250140, 26250340, 26250670, 26250700, 26250990

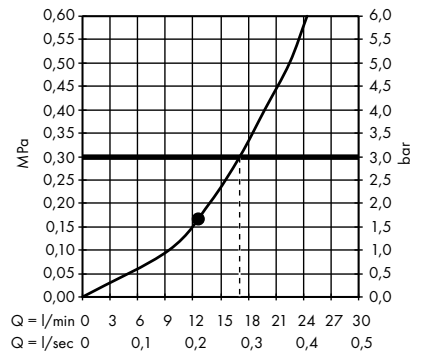

· **Raindance E** Overhead shower 300 1jet EcoSmart 9 l/ min with ceiling connector
 # 26251000

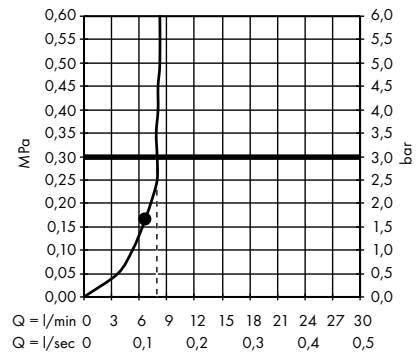

· **Raindance E** Overhead shower 400/400 1jet
 # 26252000

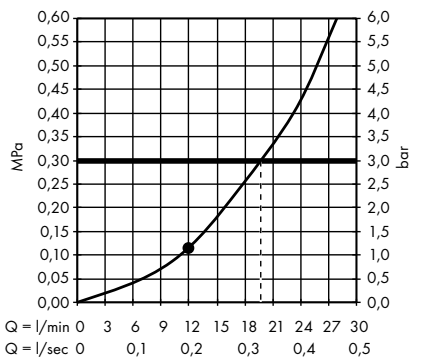

· **Raindance E** Overhead shower 400/400 1jet EcoSmart 9 l/ min
 # 26253000

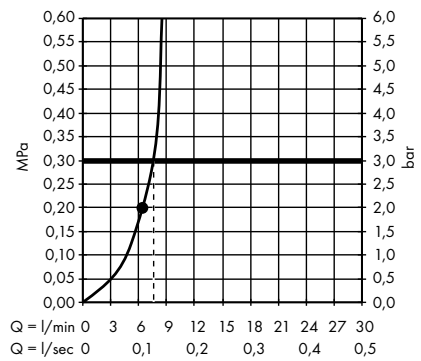

· **Raindance E** Overhead shower 360 1jet with ceiling connector
 # 27381000

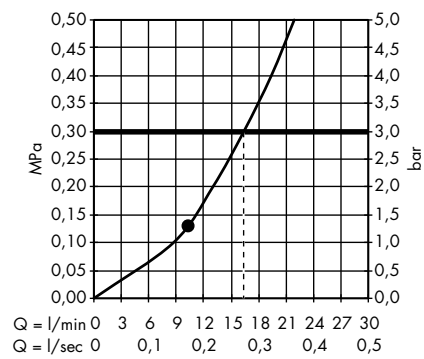

The consumption was measured in combination with the appropriate fittings (thermostat/mixer/in-wall valve) to reflect actual application in practice.

· **Raindance E** Overhead shower 360 1jet EcoSmart 9 l/ min with ceiling connector
 # 26604000

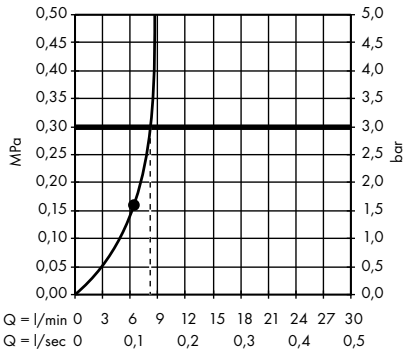

· **Raindance E** Overhead shower 360 1jet with shower arm 24 cm
 # 27371000

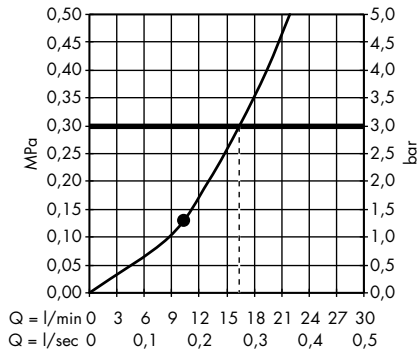

· **Raindance E** Overhead shower 360 1jet with shower arm 39 cm
 # 27376000

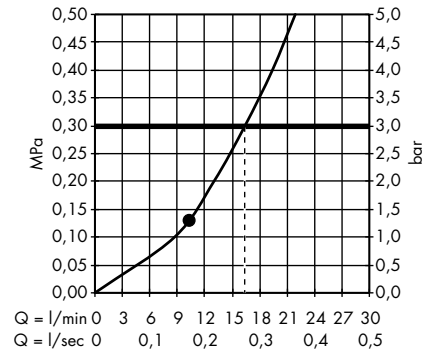

· **Raindance E** Overhead shower 360 1jet EcoSmart 9 l/ min with shower arm
 # 26605000

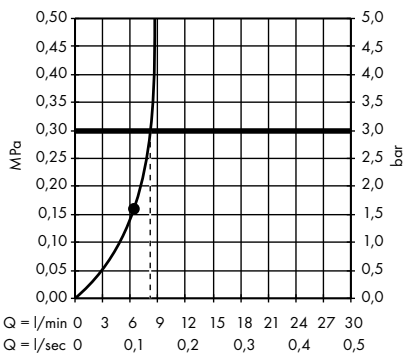

· **Raindance E** Overhead shower 240 1jet with ceiling connector
 # 27380000

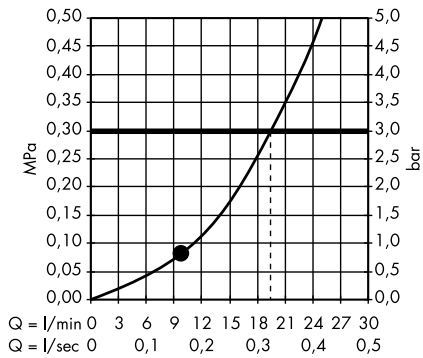

· **Raindance E** Overhead shower 240 1jet with shower arm
 # 27370000

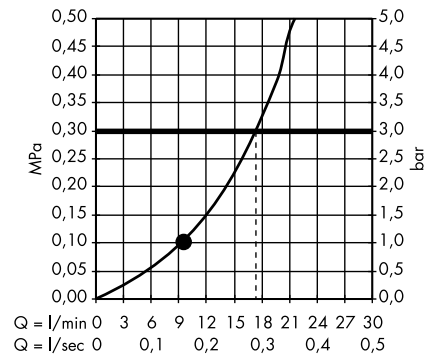

· **Raindance E** Overhead shower 240 1jet EcoSmart 9 l/ min with shower arm
 # 27375000

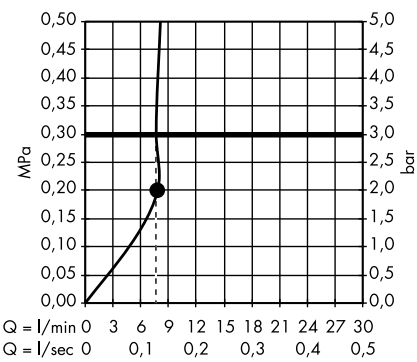

· **Raindance S** Overhead shower 300 1jet with shower arm 46 cm
 # 27492000

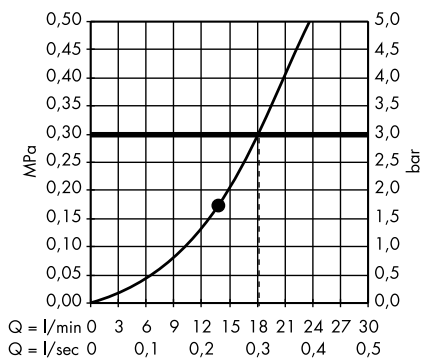

· **Raindance S** Overhead shower 300 1jet with shower arm 39 cm
 # 27493000

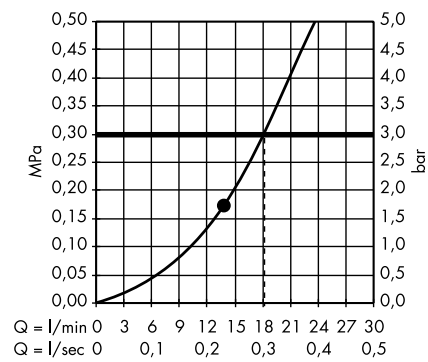

· **Raindance S** Overhead shower 300 1jet EcoSmart 9 l/ min with shower arm
 # 26601000

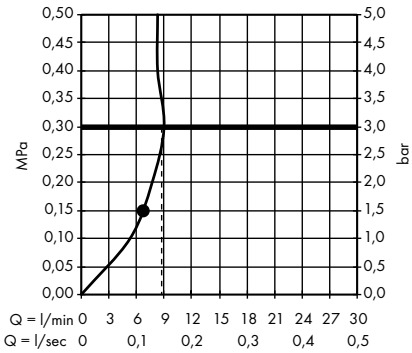

· **Raindance S** Overhead shower 300 1jet with ceiling connector
 # 27494000

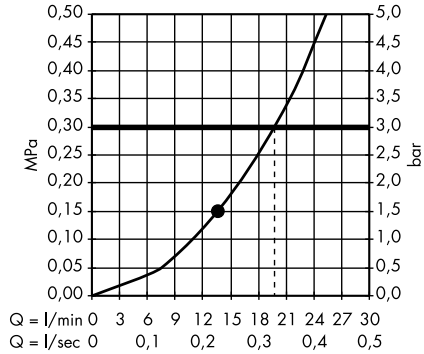

· **Raindance S** Overhead shower 300 1jet EcoSmart 9 l/ min with ceiling connector
 # 26600000

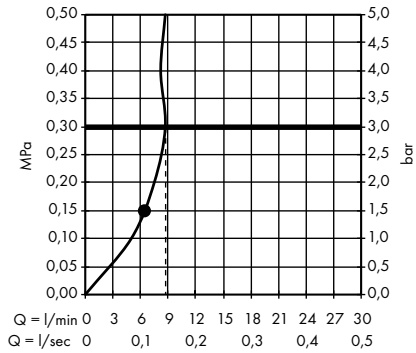

· **Raindance S** Overhead shower 240 1jet PowderRain with ceiling connector
 # 27620000

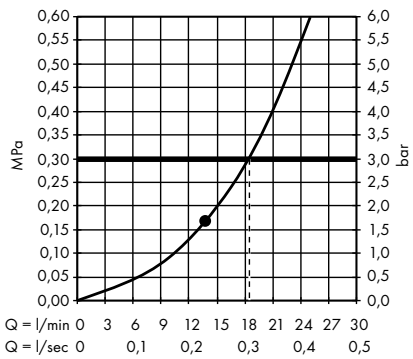

· **Raindance S** Overhead shower 240 1jet PowderRain with shower arm
 # 27607000

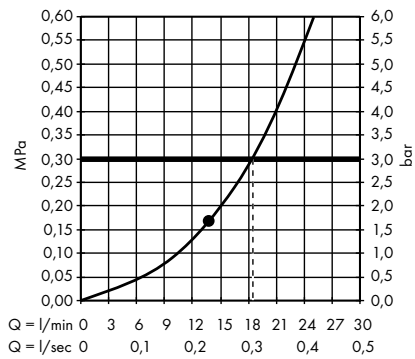

· **Raindance S** Overhead shower 240 1jet PowderRain
 # 27623000, 27623670, 27623700

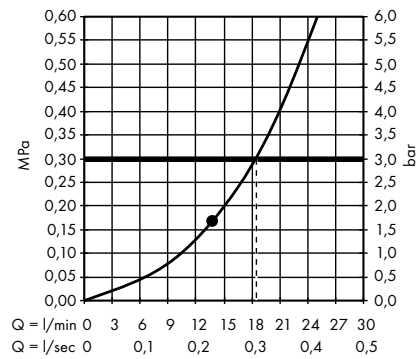

· **Raindance S** Overhead shower 240 1jet with shower arm
 # 27474000

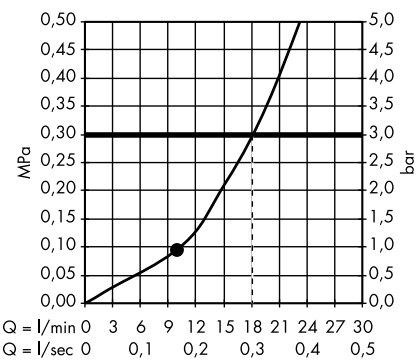

· **Raindance S** Overhead shower 240 1jet EcoSmart 9 l/ min with shower arm
 # 27461000

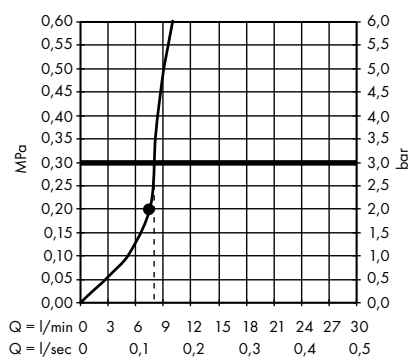

· **Raindance S** Overhead shower 240 1jet with ceiling connector
 # 27477000

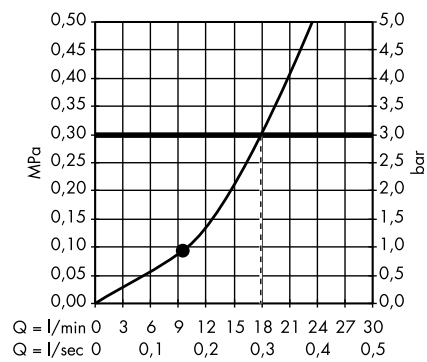

The consumption was measured in combination with the appropriate fittings (thermostat/mixer/in-wall valve) to reflect actual application in practice.

· **Raindance S** Overhead shower 240 1jet EcoSmart 9 l/ min with ceiling connector
 # 27463000

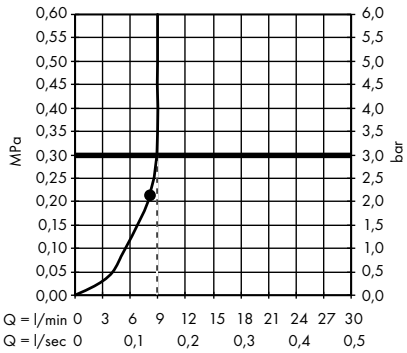

· **Raindance S** Overhead shower 180 1jet with ceiling connector
 # 27478000

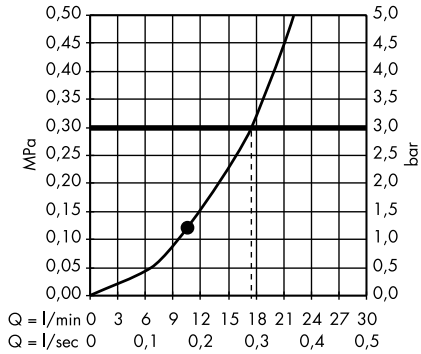

· **Raindance Classic** Overhead shower 240 1jet with shower arm
 # 27424000, 27424090

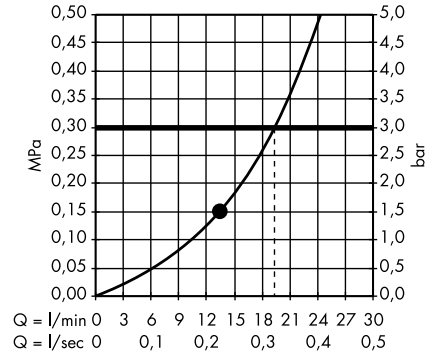

· **Raindance Classic** Overhead shower 240 1jet with ceiling connector
 # 27405000, 27405090

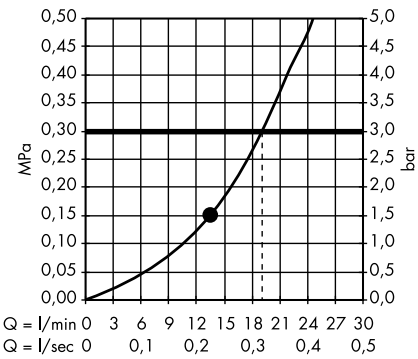

· **Pulsify S** Overhead shower 260 2jet with wall connector
 # 24150000, 24150670, 24150700

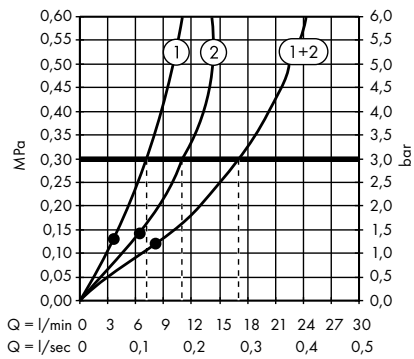

1. Intense PowderRain
2. PowderRain

· **Pulsify S** Overhead shower 260 2jet EcoSmart with wall connector
 # 24151000, 24151670, 24151700

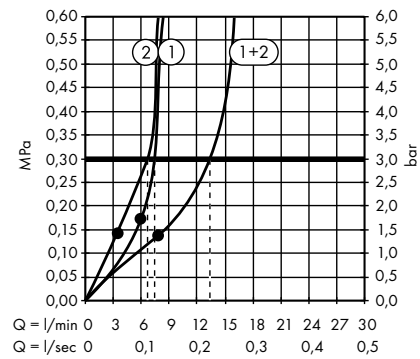

1. PowderRain
2. Intense PowderRain

· **Pulsify S** Overhead shower 260 1jet
 # 24140000, 24140670, 24140700

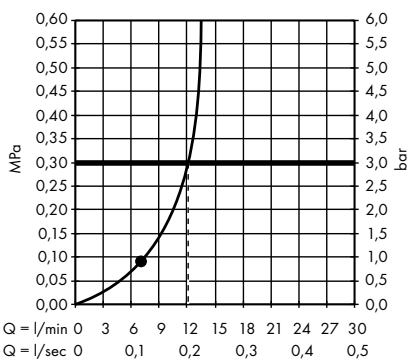

· **Pulsify S** Overhead shower 260 1jet EcoSmart
 # 24141000, 24141670, 24141700

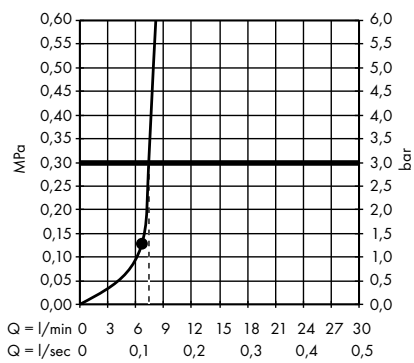

· **Pulsify S** Overhead shower 105 1jet
 # 24130000, 24130670, 24130700

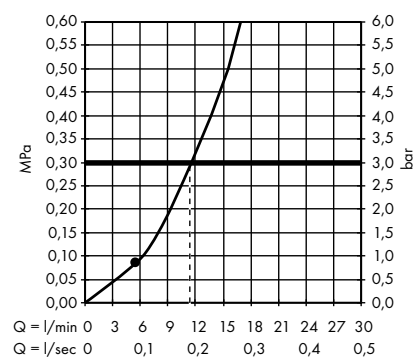

· **Pulsify S** Overhead shower 105 1jet Green
 # 24132000, 24132670, 24132700

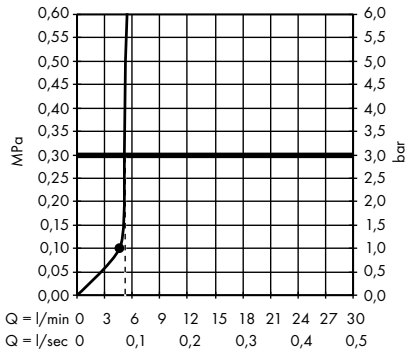

· **Croma E** Overhead shower 280 1jet
 # 26257000

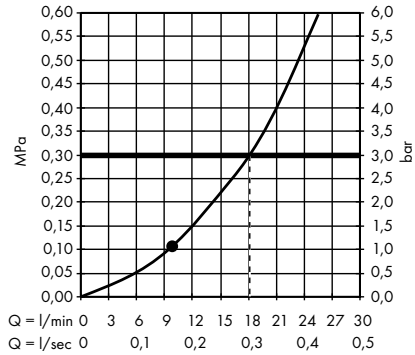

· **Croma E** Overhead shower 280 1jet EcoSmart
 # 26258000

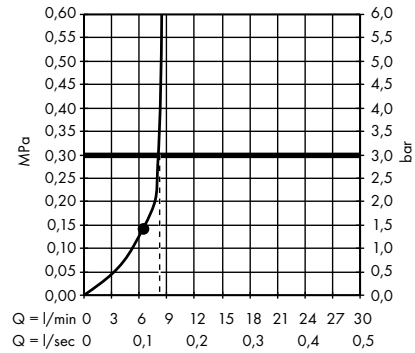

· **Croma** Overhead shower 280 1jet
 # 26220000, 26220140, 26220340, 26220670, 26220700, 26220990

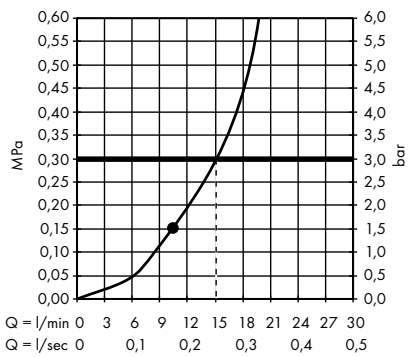

· **Croma** Overhead shower 280 1jet EcoSmart 9 l/ min
 # 26221000, 26221140, 26221340, 26221670, 26221700, 26221990

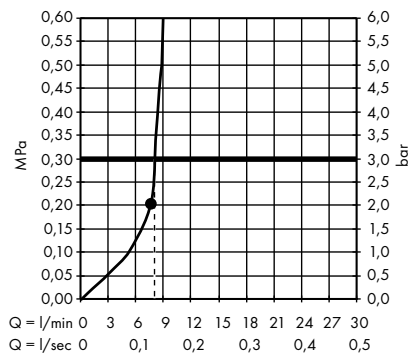

· **Croma** Overhead shower 220 1jet
 # 26464000

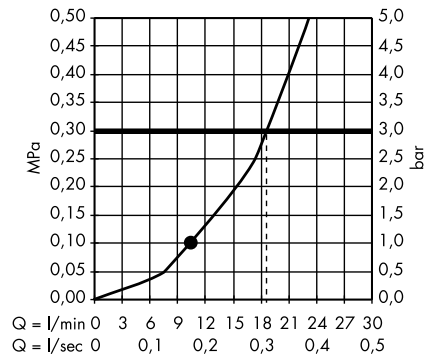

· **Croma** Overhead shower 220 1jet EcoSmart 9 l/ min
 # 26465000

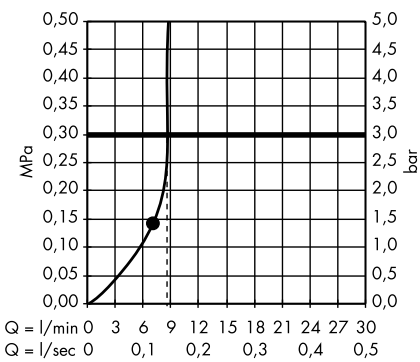

· **Croma 100** Overhead shower Multi
 # 27443000

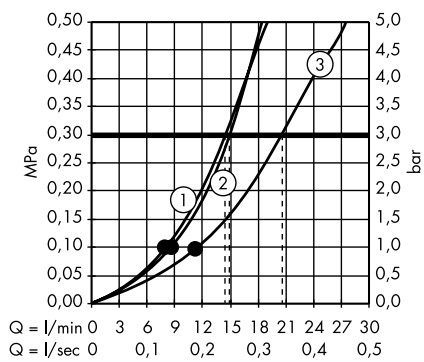

1. Massage
2. Mono
3. Rain

· **Croma 100** Overhead shower Vario
 # 27441000

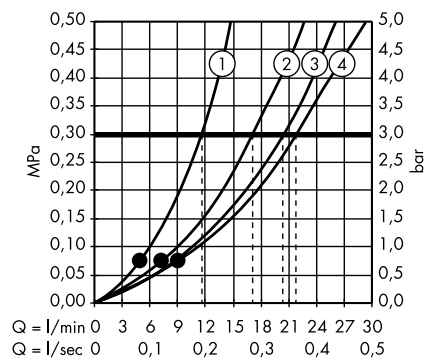

1. Massage
2. Shampoo
3. Normal
4. Rain

The consumption was measured in combination with the appropriate fittings (thermostat/mixer/in-wall valve) to reflect actual application in practice.

· **Croma 100** Overhead shower Vario EcoSmart 9 l/ min
 # 28462000

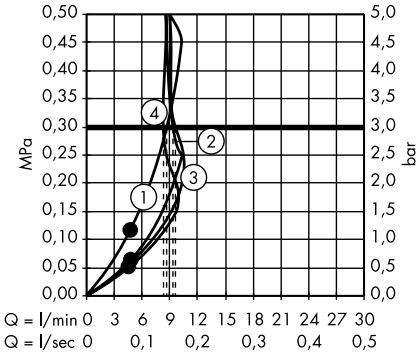

1. Massage
2. Shampoo
3. Normal
4. Rain

· **Crometta E** Overhead shower 240 1jet
 # 26726000

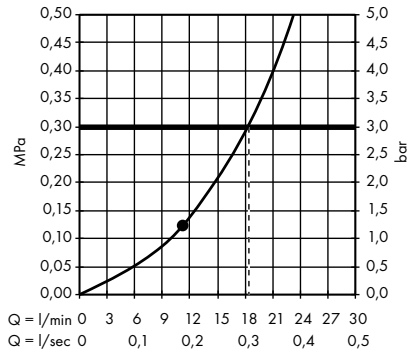

· **Crometta E** Overhead shower 240 1jet EcoSmart 9 l/ min
 # 26727000

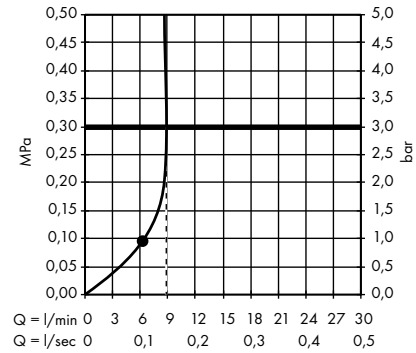

· **Crometta E** Overhead shower 240 1jet LowPressure
 # 26722000

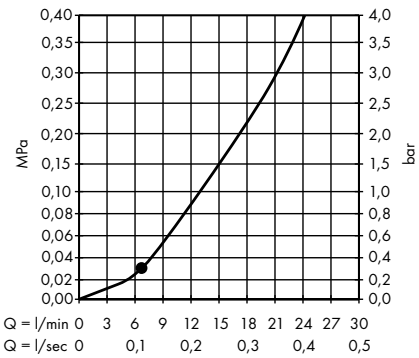

· **Crometta S** Overhead shower 240 1jet
 # 26723000

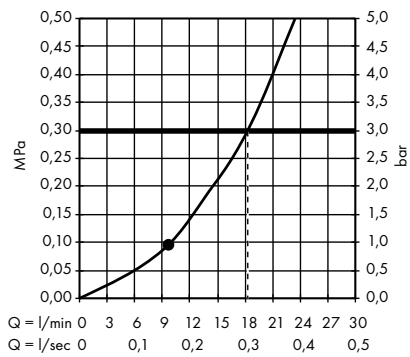

· **Crometta S** Overhead shower 240 1jet EcoSmart 9 l/ min
 # 26724000

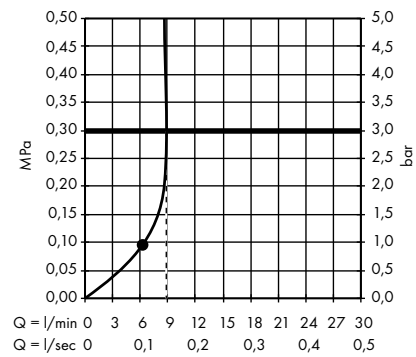

· **Crometta S** Overhead shower 240 1jet LowPressure
 # 26725000

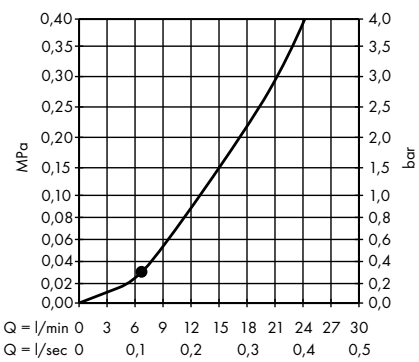

· **Crometta 85** Overhead shower Multi
 # 28425000

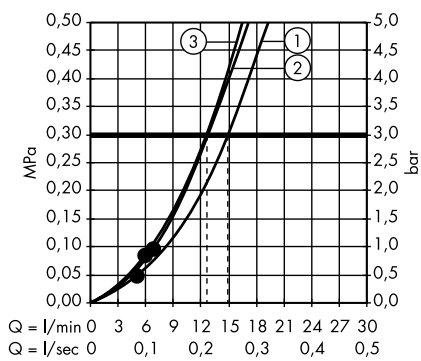

1. Normal
2. Massage
3. Mono

· **Crometta 85** Overhead shower Vario
 # 28424000

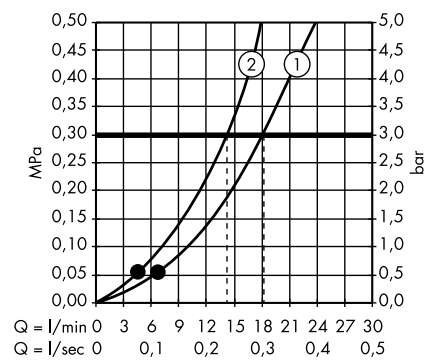

1. Normal
2. Vario

· **Crometta 85** Overhead shower 1jet Green 6 l/ min
 # 28423000

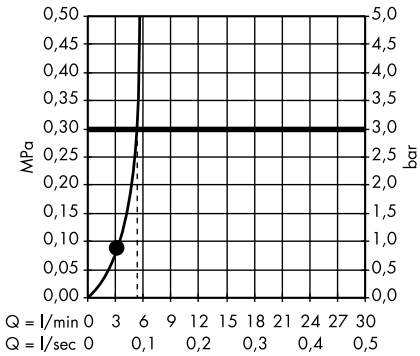

· **Vernis Blend** Overhead shower 200 1jet
 # 26271000, 26271670

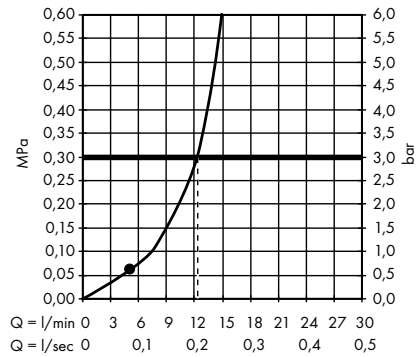

· **Vernis Blend** Overhead shower 200 1jet EcoSmart
 # 26277000, 26277670

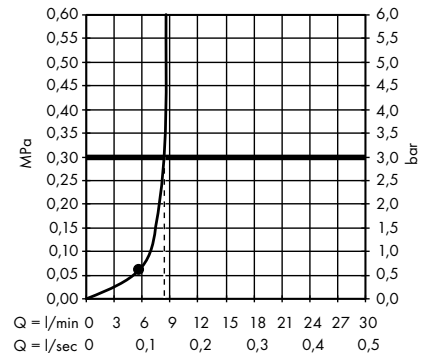

· **Vernis Blend** Overhead shower 200 1jet Green
 # 26093000

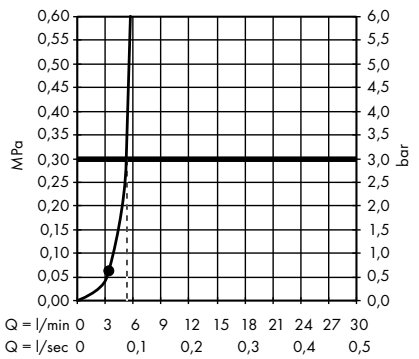

· **Vernis Blend** Overhead shower 200 1jet LowPressure
 # 26095000

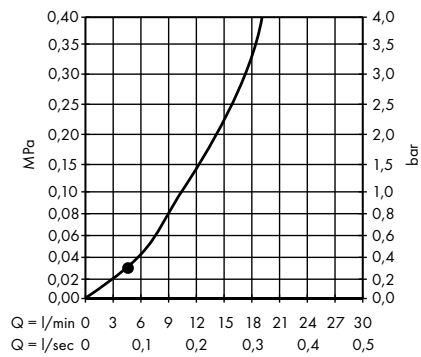

· **Vernis Shape** Overhead shower 230 1jet
 # 26281000, 26281670

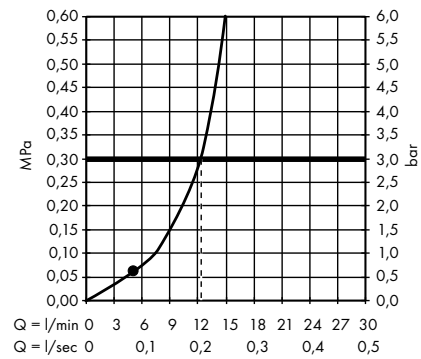

· **Vernis Shape** Overhead shower 230 1jet EcoSmart
 # 26283000, 26283670

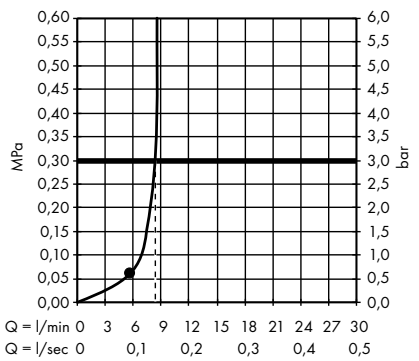

· **Vernis Shape** Overhead shower 230 1jet Green
 # 26094000

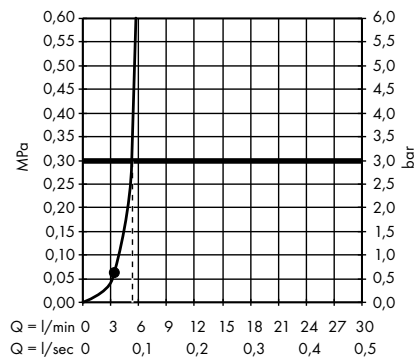

· **Vernis Shape** Overhead shower 200 1jet LowPressure
 # 26096000

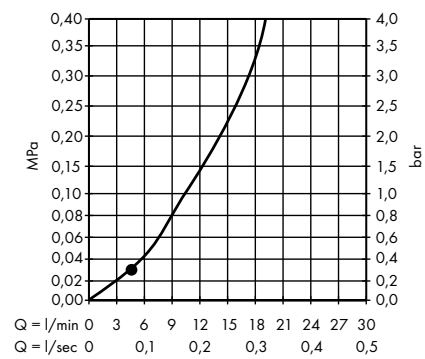

The consumption was measured in combination with the appropriate fittings (thermostat/mixer/in-wall valve) to reflect actual application in practice.

· **Clubmaster** Overhead shower 3jet EcoSmart 9 l/ min with shower arm
 # 26606000

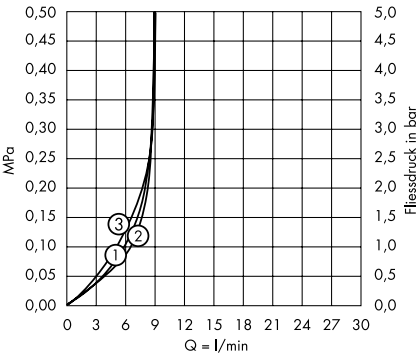

1. Normal
2. Soft
3. Massage

· **Clubmaster** Overhead shower 3jet
 # 28496000

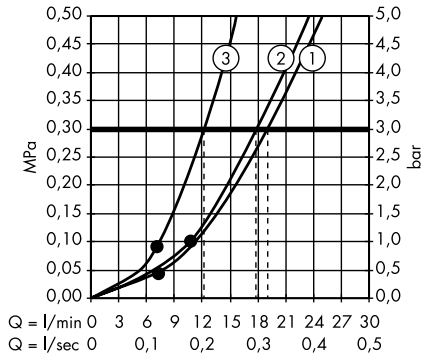

1. Normal
2. Soft
3. Massage

Body showers

· **Rainfinity** Shoulder shower 500 1jet with shower shelf
 # 26243000, 26243700

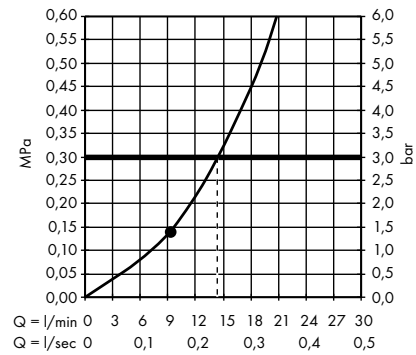

· **Bodyvette** Body shower 1jet
 # 28466000

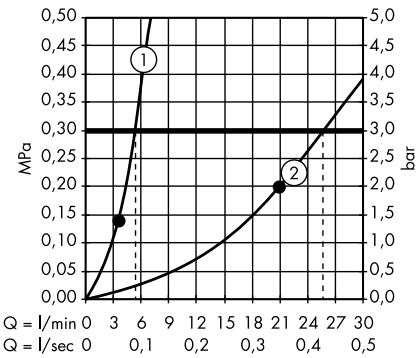

1. 1 x Body shower
2. 6 x Body shower

Showerpipes and shower panels

· **Rainfinity** Showerpipe 360 1jet for concealed installation
 # 26842000, 26842700

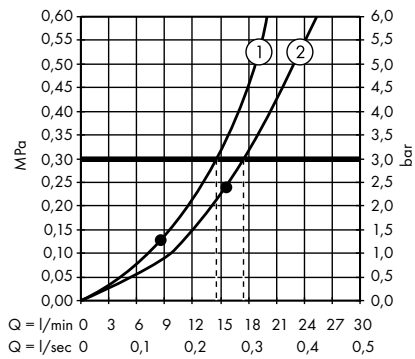

1. Hand shower
2. Overhead shower

· **Rainmaker Select** Showerpipe 460 3jet with thermostat
 # 27106400

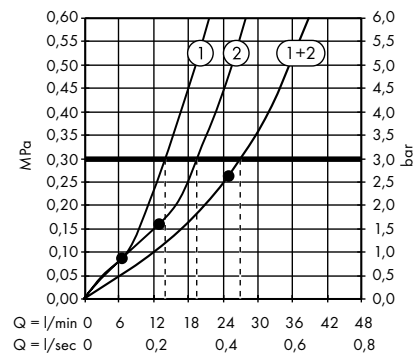

1. Hand shower
2. Overhead shower

· **Rainmaker Select** Showerpipe 460 3jet EcoSmart 9 l/ min with thermostat
 # 27029400

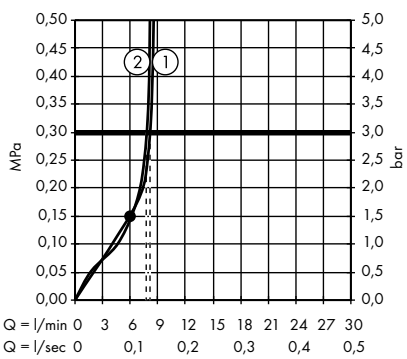

1. Hand shower
2. Overhead shower

· **Rainmaker Select** Showerpipe 460 2jet with thermostat
 # 27109400

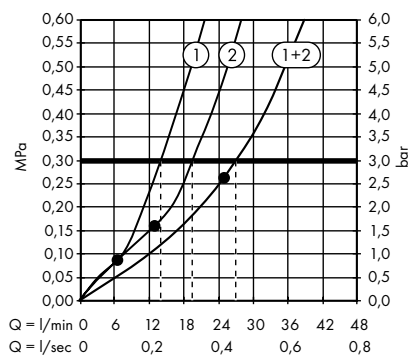

1. Hand shower
2. Overhead shower

· **Rainmaker Select** Showerpipe 460 2jet EcoSmart 9 l/ min with thermostat
 # 27028400

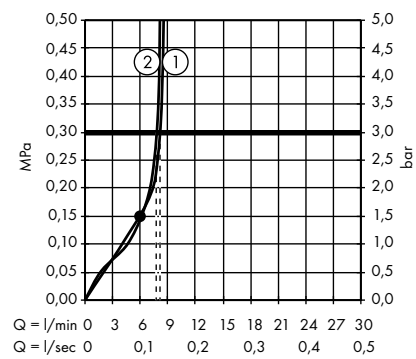

1. Hand shower
2. Overhead shower

· **Raindance Select E** Showerpipe 300 3jet with ShowerTablet Select 300
 # 27127000, 27127400

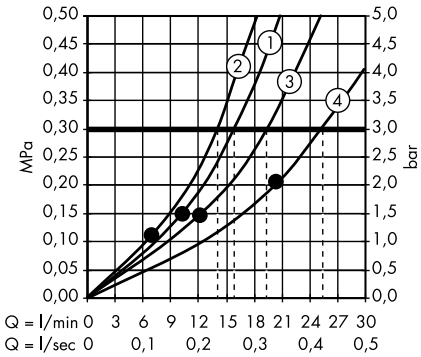

1. Overhead shower Rain / RainAir
2. Hand shower
3. Overhead shower RainStream
4. Overhead shower Rain + RainStream / RainAir + RainStream

· **Raindance Select E** Showerpipe 300 2jet with ShowerTablet Select 300
 # 27126000, 27126400

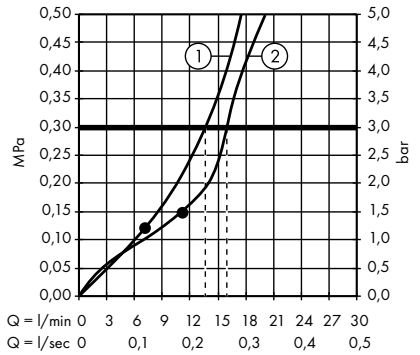

1. Hand shower
2. Overhead shower

· **Raindance Select E** Showerpipe 300 2jet EcoSmart 9 l/ min with ShowerTablet Select 300
 # 27283000, 27283400

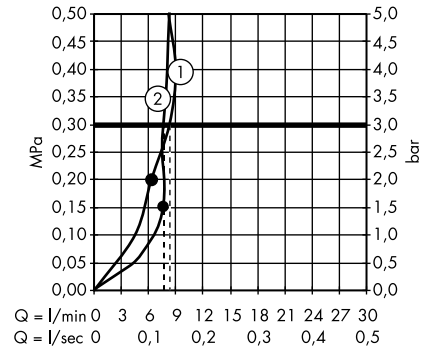

1. Hand shower
2. Overhead shower

· **Raindance Select S** Showerpipe 300 2jet with thermostat
 # 27133000, 27133400

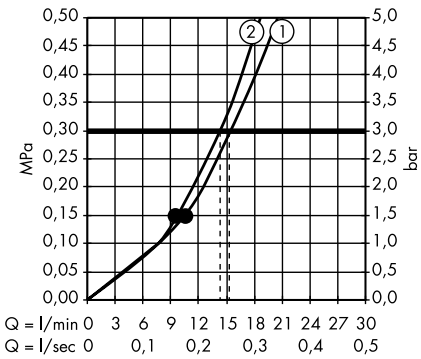

1. Overhead shower
2. Hand shower

· **Raindance Select S** Showerpipe 240 2jet with thermostat
 # 27129000, 27129400

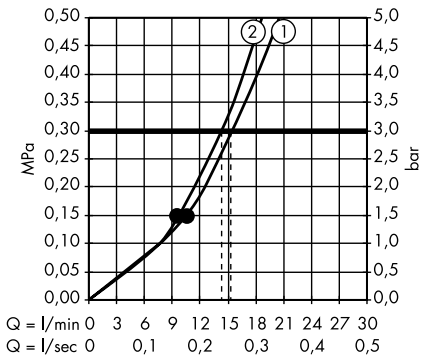

1. Overhead shower
2. Hand shower

· **Raindance Select S** Showerpipe 240 1jet PowderRain with thermostat
 # 27633000, 27633140, 27633340, 27633670, 27633700, 27633990

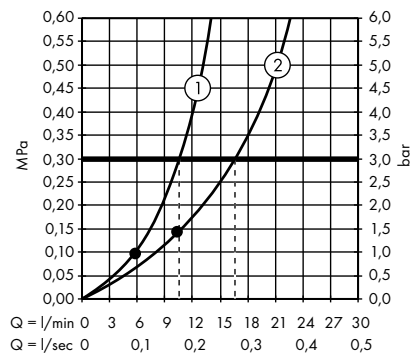

1. Hand shower
2. Overhead shower

· **Raindance E** Showerpipe 360 1jet with thermostat
 # 27112000, 27112400

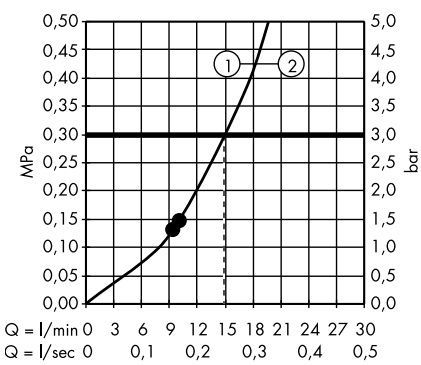

1. Overhead shower
2. Hand shower

· **Raindance E** Showerpipe 360 1jet EcoSmart 9 l/ min with thermostat
 # 27286000, 27286400

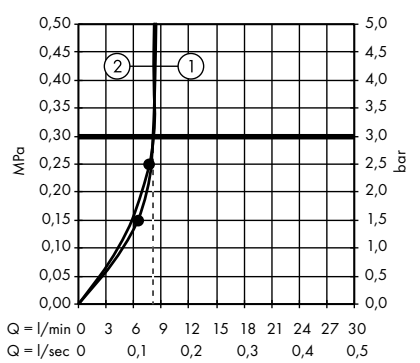

1. Hand shower
2. Overhead shower

· **Raindance E** Showerpipe 360 1jet with bath thermostat
 # 27113000, 27113400

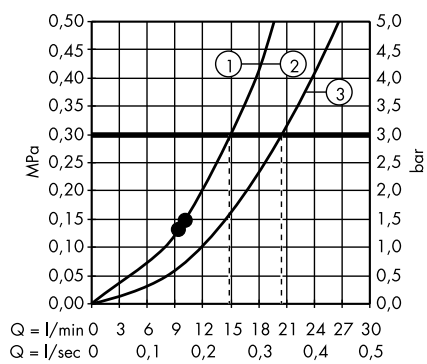

1. Hand shower
2. Overhead shower
3. Bath spout

The consumption was measured in combination with the appropriate fittings (thermostat/mixer/in-wall valve) to reflect actual application in practice.

· **Raindance E** Showerpipe 360 1jet with ShowerTablet Select 300
 # 27288000, 27288400

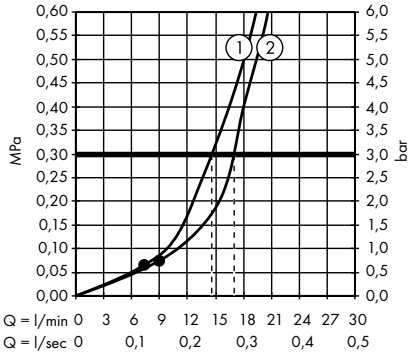

1. Hand shower
2. Overhead shower

· **Raindance E** Showerpipe 300 1jet with ShowerTablet 600
 # 27363000

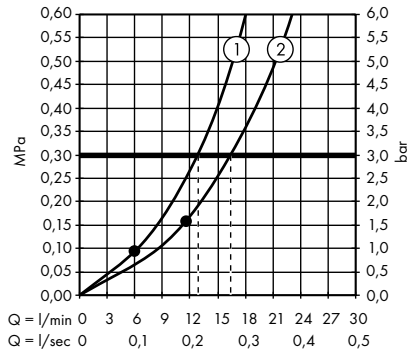

1. Hand shower
2. Overhead shower

· **Raindance E** Showerpipe 300 1jet EcoSmart 9 l/ min with ShowerTablet 600
 # 27364000

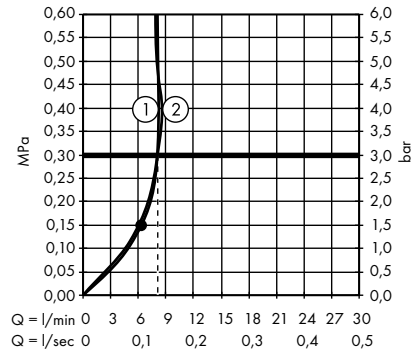

1. Hand shower
2. Overhead shower

· **Raindance E** Showerpipe 300 1jet with ShowerTablet 350
 # 27361000

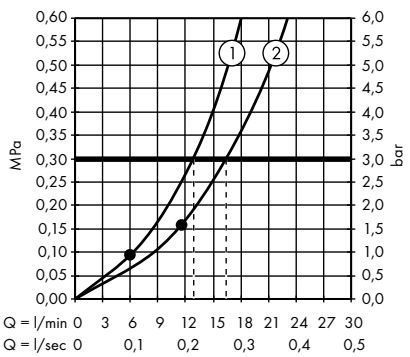

1. Hand shower
2. Overhead shower

· **Raindance E** Showerpipe 300 1jet EcoSmart 9 l/ min with ShowerTablet 350
 # 27362000

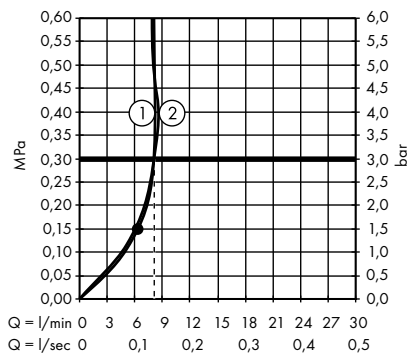

1. Hand shower
2. Overhead shower

· **Raindance S** Showerpipe 300 1jet with thermostat
 # 27114000

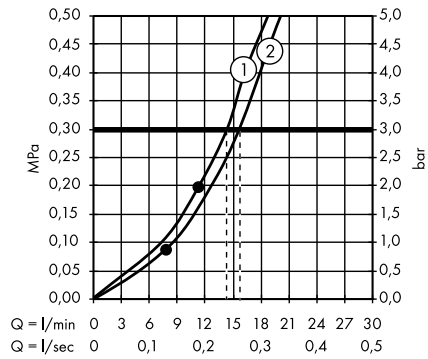

1. Overhead shower
2. Hand shower

· **Raindance S** Showerpipe 240 1jet with thermostat
 # 27115000

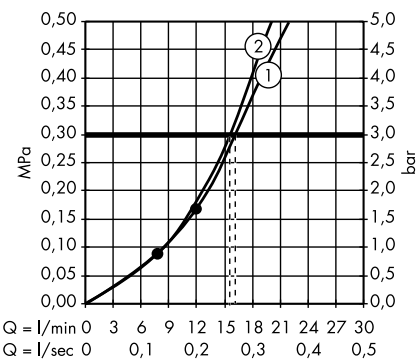

1. Overhead shower
2. Hand shower

· **Raindance S** Showerpipe 240 1jet EcoSmart 9 l/ min with thermostat
 # 27116000

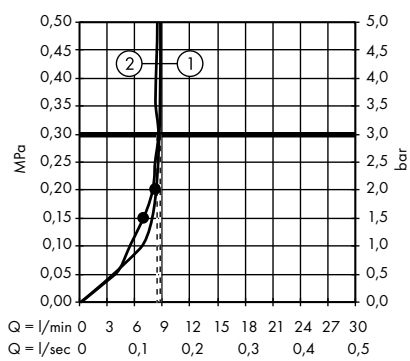

1. Overhead shower
2. Hand shower

· **Raindance S** Showerpipe 240 1jet with bath thermostat
 # 27117000

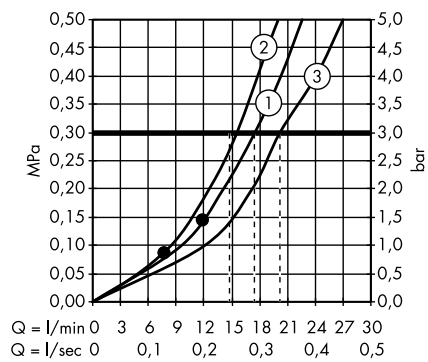

1. Overhead shower
2. Hand shower
3. Bath spout

· **Pulsify S** Showerpipe 260 2jet with ShowerTablet Select 400
 # 24240000, 24240670, 24240700

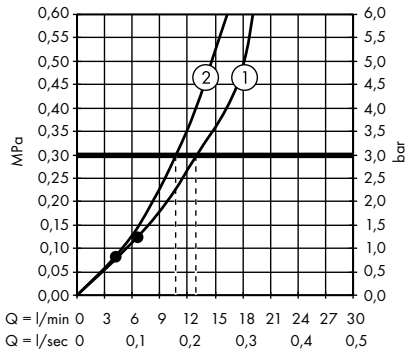

1. Overhead shower
2. Hand shower

· **Pulsify S** Showerpipe 260 1jet with ShowerTablet Select 400
 # 24220000

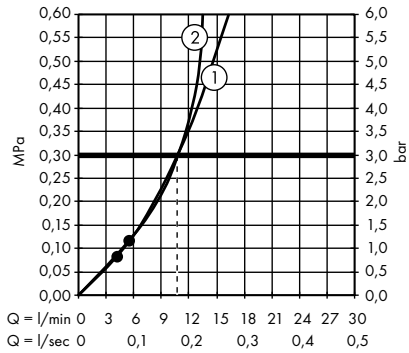

1. Hand shower
2. Overhead shower

· **Croma Select E** Showerpipe 180 2jet with thermostat
 # 27256400

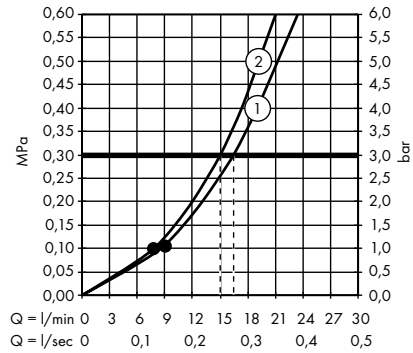

1. Overhead shower
2. Hand shower

· **Croma Select E** Showerpipe 180 2jet EcoSmart 9 l/ min with thermostat
 # 27257400

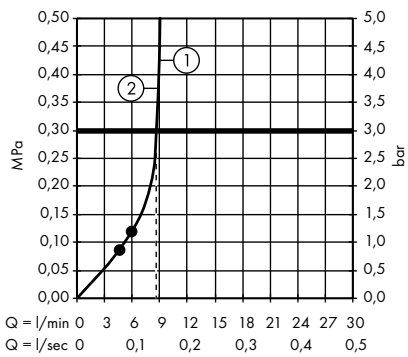

1. Overhead shower
2. Hand shower

· **Croma Select E** Showerpipe 180 2jet with bath thermostat
 # 27352400

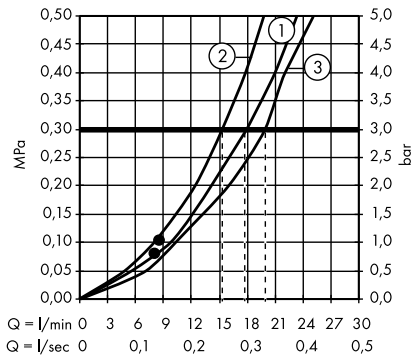

1. Overhead shower
2. Hand shower
3. Bath spout

· **Croma Select E** Showerpipe 180 2jet with single lever mixer
 # 27258400

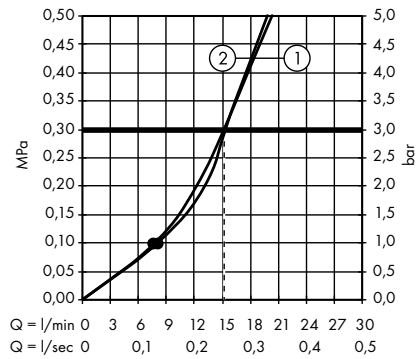

1. Overhead shower
2. Hand shower

· **Croma Select E** SemiPipe Multi with thermostat
 # 27248400

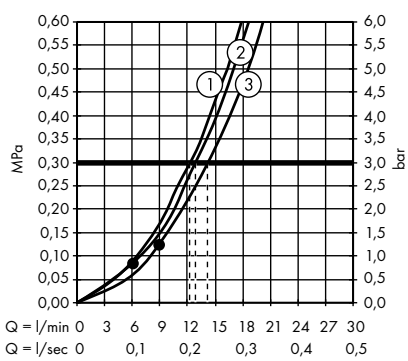

1. Massage
2. IntenseRain
3. SoftRain

· **Croma Select S** Showerpipe 280 1jet with thermostat
 # 26790000

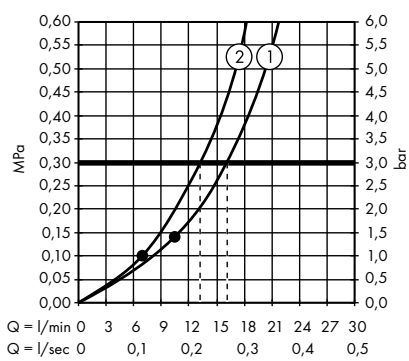

1. Overhead shower
2. Hand shower

· **Croma Select S** Showerpipe 280 1jet with thermostat and hand shower Raindance Select S 120 3jet
 # 26890XXX

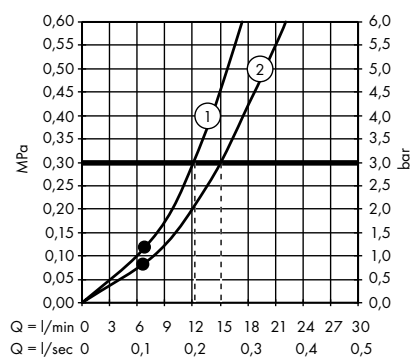

1. Overhead shower
2. Hand shower

The consumption was measured in combination with the appropriate fittings (thermostat/mixer/in-wall valve) to reflect actual application in practice.

· **Croma Select S** Showerpipe 280 1jet EcoSmart 9 l/ min with thermostat and hand shower Raindance Select S 120 3jet
 # 26891XXX

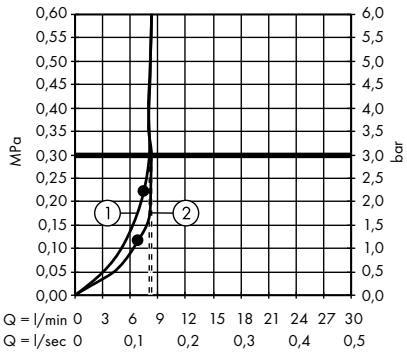

1. Overhead shower
2. Hand shower

· **Croma Select S** Showerpipe 280 1jet EcoSmart 9 l/ min with thermostat
 # 26794000

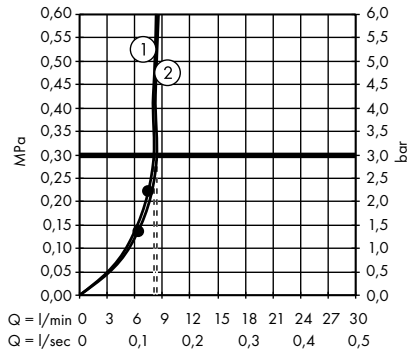

1. Overhead shower
2. Hand shower

· **Croma Select S** Showerpipe 280 1jet with bath thermostat
 # 26792000

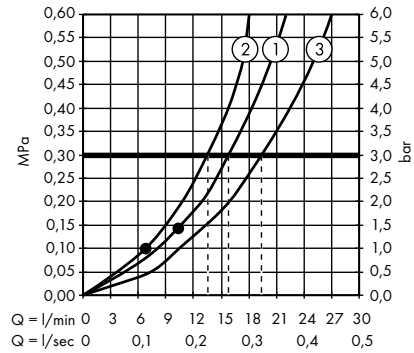

1. Overhead shower
2. Hand shower
3. Bath spout

· **Croma Select S** Showerpipe 280 1jet with single lever mixer
 # 26791000

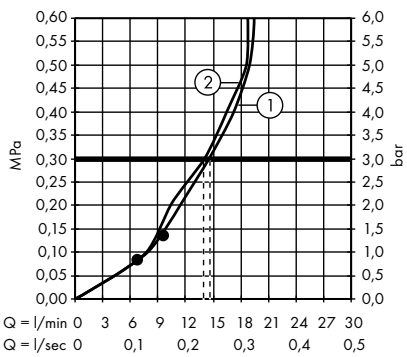

1. Overhead shower
2. Hand shower

· **Croma Select S** Showerpipe 280 1jet Reno
 # 26793000

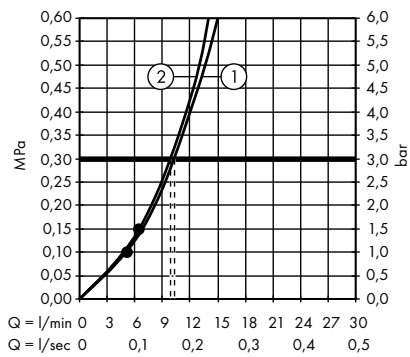

1. Hand shower
2. Overhead shower

· **Croma Select S** Showerpipe 180 2jet with thermostat
 # 27253400

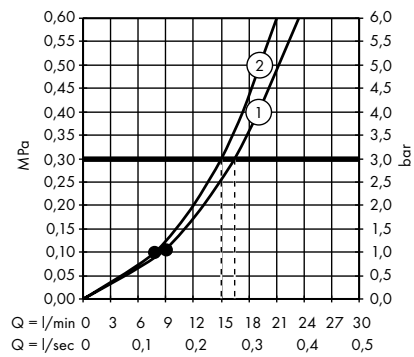

1. Overhead shower
2. Hand shower

· **Croma Select S** Showerpipe 180 2jet EcoSmart 9 l/ min with thermostat
 # 27254400

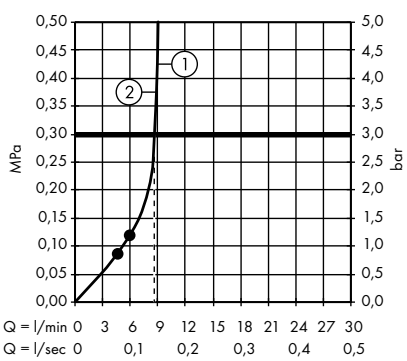

1. Overhead shower
2. Hand shower

· **Croma Select S** Showerpipe 180 2jet with bath thermostat
 # 27351400

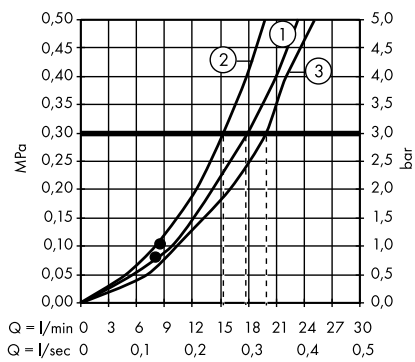

1. Overhead shower
2. Hand shower
3. Bath spout

· **Croma Select S** Showerpipe 180 2jet with single lever mixer
 # 27255400

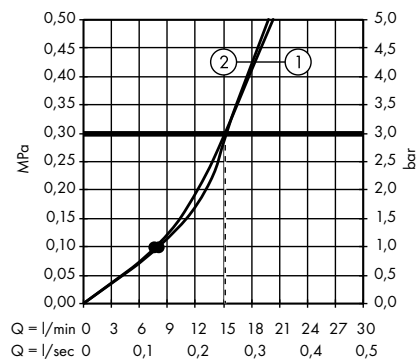

1. Overhead shower
2. Hand shower

· **Croma Select S** SemiPipe Multi with thermostat
 # 27247400

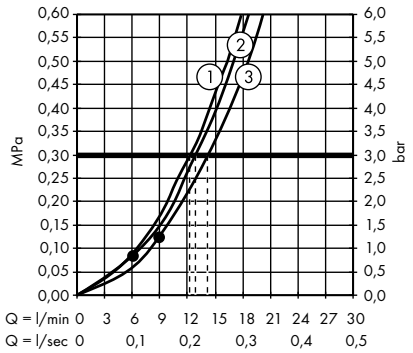

1. Massage
2. IntenseRain
3. SoftRain

· **Croma E** Showerpipe 280 1jet with thermostat
 # 27630000

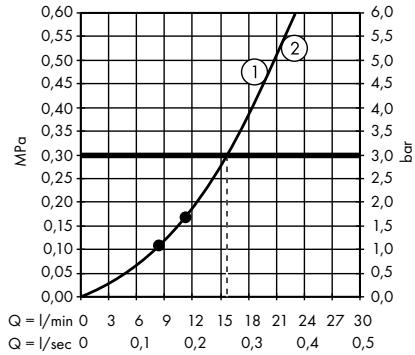

1. Hand shower
2. Overhead shower

· **Croma E** Showerpipe 280 1jet EcoSmart with thermostat
 # 27660000

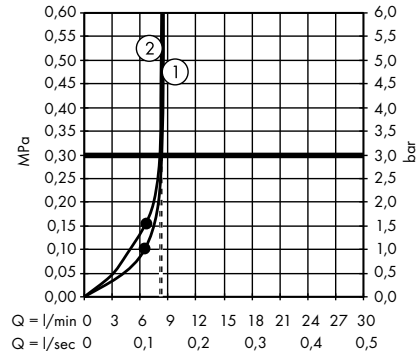

1. Hand shower
2. Overhead shower

· **Croma E** Showerpipe 280 1jet with bath thermostat
 # 27687000

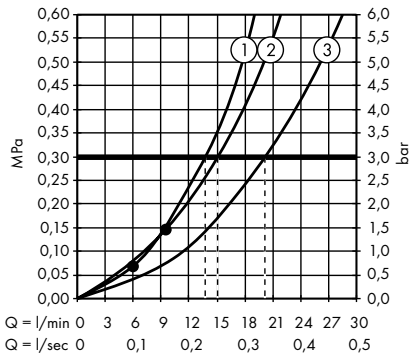

1. Hand shower
2. Overhead shower
3. Bath spout

· **Croma** Showerpipe 220 1jet with thermostat
 # 27185000

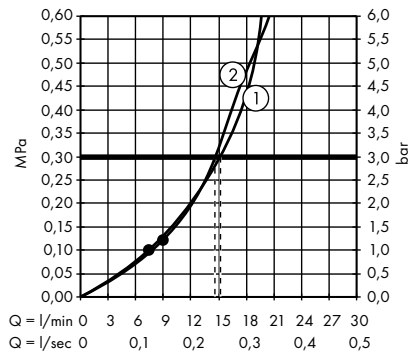

1. Overhead shower
2. Hand shower

· **Croma** Showerpipe 220 1jet EcoSmart 9 l/ min with thermostat
 # 27188000

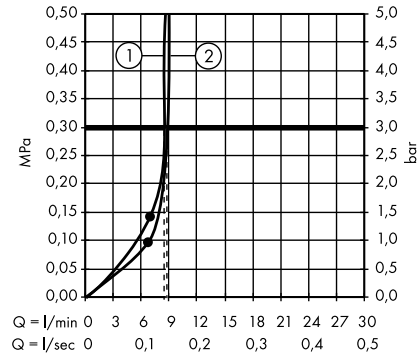

1. Overhead shower
2. Hand shower

· **Croma** Showerpipe 220 1jet with bath thermostat
 # 27223000

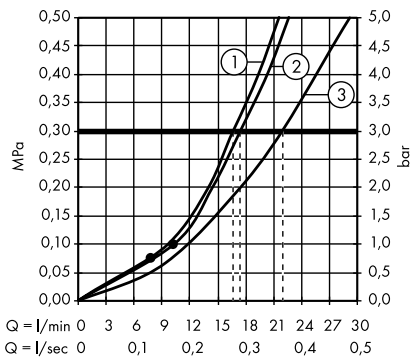

1. Overhead shower
2. Hand shower
3. Bath spout

· **Croma** Showerpipe 220 1jet with single lever mixer
 # 27222000

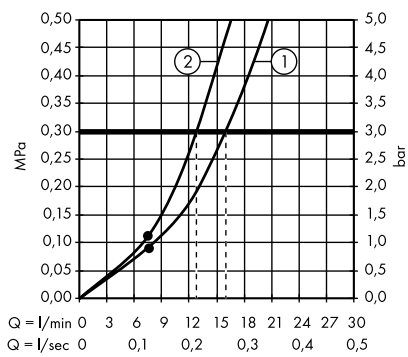

1. Overhead shower
2. Hand shower

· **Croma** Showerpipe 220 1jet Reno
 # 27224000

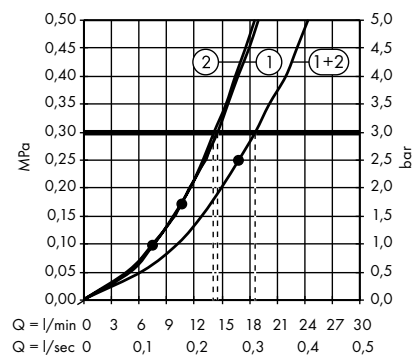

1. Hand shower
2. Overhead shower

The consumption was measured in combination with the appropriate fittings (thermostat/mixer/in-wall valve) to reflect actual application in practice.

· **Crometta E** Showerpipe 240 1jet with thermostat
 # 27271000

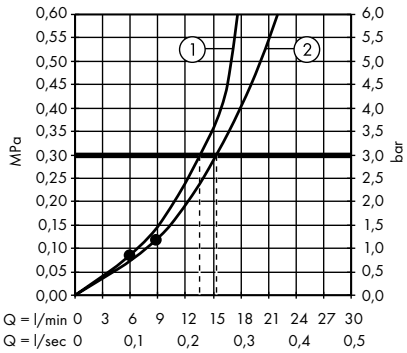

1. Hand shower
2. Overhead shower

· **Crometta E** Showerpipe 240 1jet EcoSmart with thermostat
 # 27281000

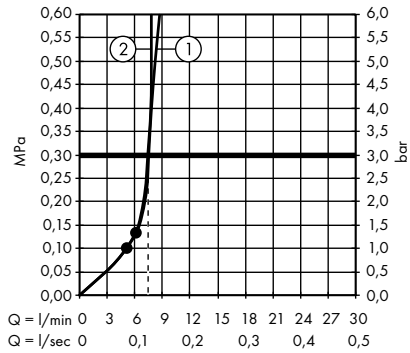

1. Hand shower
2. Overhead shower

· **Crometta E** Showerpipe 240 1jet with bath thermostat
 # 27298000

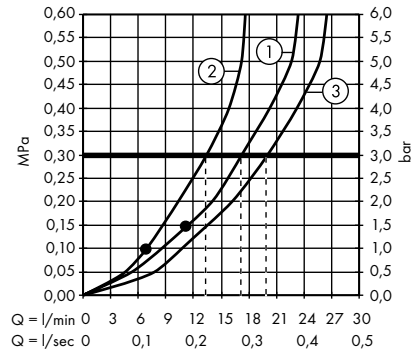

1. Overhead shower
2. Hand shower
3. Bath spout

· **Crometta E** Showerpipe 240 1jet with single lever mixer
 # 27284000

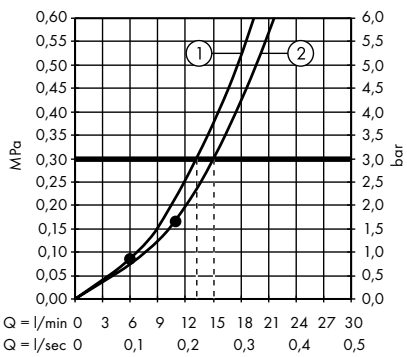

1. Hand shower
2. Overhead shower

· **Crometta E** Showerpipe 240 1jet EcoSmart 9 l/ min Reno
 # 27289000

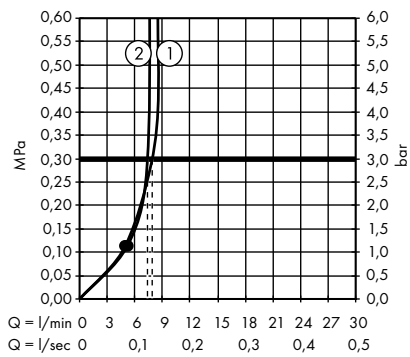

1. Hand shower
2. Overhead shower

· **Crometta S** Showerpipe 240 1jet with thermostat
 # 27267000

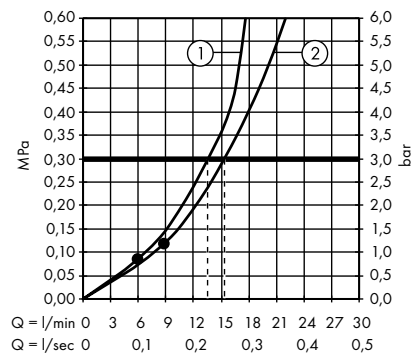

1. Hand shower
2. Overhead shower

· **Cromettta S** Showerpipe 240 1jet EcoSmart 9 l/ min with thermostat
 # 27268000

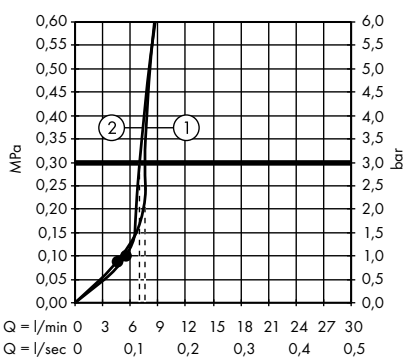

1. Hand shower
2. Overhead shower

· **Crometta S** Showerpipe 240 1jet with bath thermostat
 # 27320000

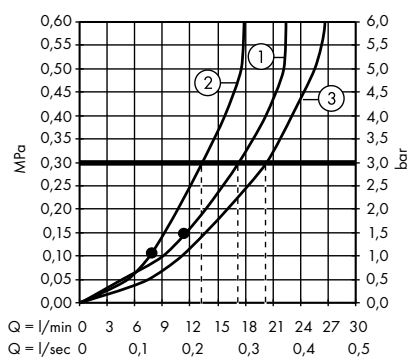

1. Overhead shower
2. Hand shower
3. Bath spout

· **Crometta S** Showerpipe 240 1jet with single lever mixer
 # 27269000

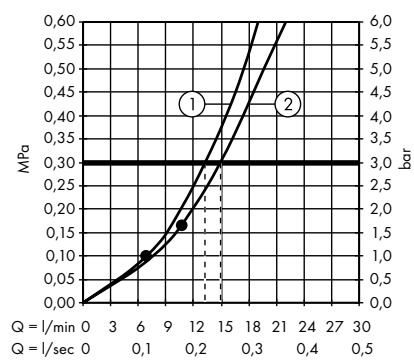

1. Hand shower
2. Overhead shower

· **Crometta S** Showerpipe 240 1jet EcoSmart 9 l/ min Reno
 # 27270000

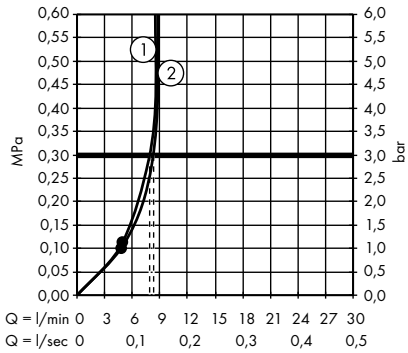

1. Hand shower
2. Overhead shower

· **Vernis Blend** Showerpipe 200 1jet with thermostat
 # 26276000, 26276670

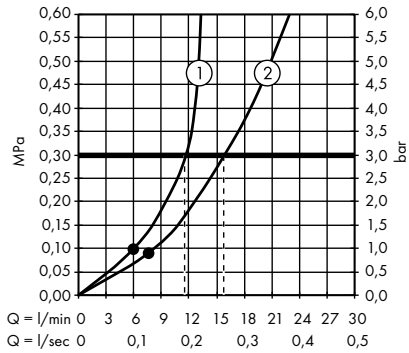

1. Overhead shower
2. Hand shower

· **Vernis Blend** Showerpipe 200 1jet EcoSmart with thermostat
 # 26089000, 26089670

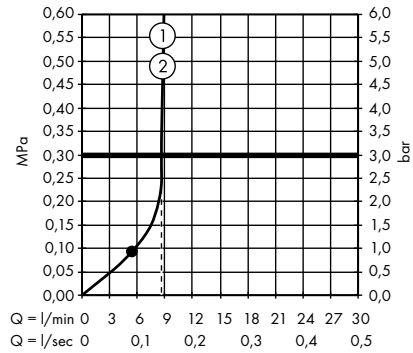

1. Overhead shower
2. Hand shower

· **Vernis Blend** Showerpipe 200 1jet Green with thermostat
 # 26318000

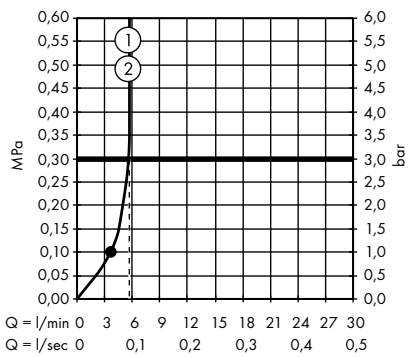

1. Overhead shower
2. Hand shower

· **Vernis Blend** Showerpipe 200 1jet with bath thermostat
 # 26274000

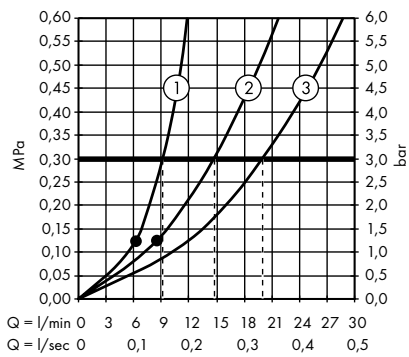

1. Overhead shower
2. Hand shower
3. Bath spout

· **Vernis Blend** Showerpipe 200 1jet EcoSmart with bath thermostat
 # 26079000

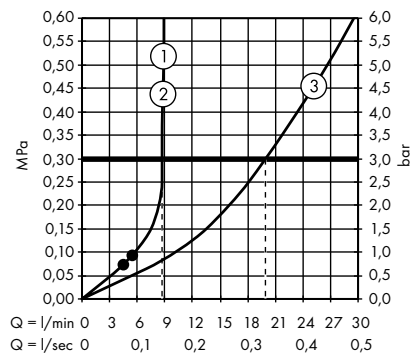

1. Overhead shower
2. Hand shower
3. Bath spout

· **Vernis Blend** Showerpipe 200 1jet Reno
 # 26272000, 26272670

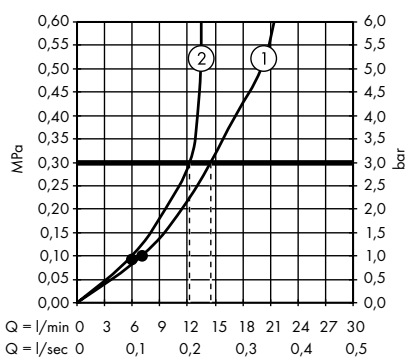

1. Hand shower
2. Overhead shower

· **Vernis Blend** Showerpipe 200 1jet Reno EcoSmart
 # 26099000, 26099670

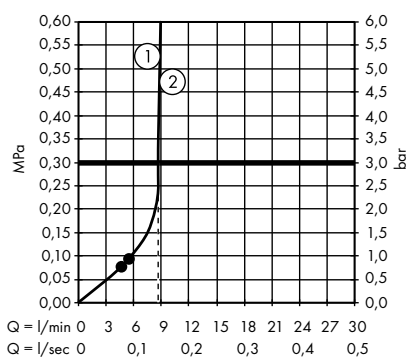

1. Overhead shower
2. Hand shower

· **Vernis Shape** Showerpipe 230 1jet with thermostat
 # 26286000, 26286670

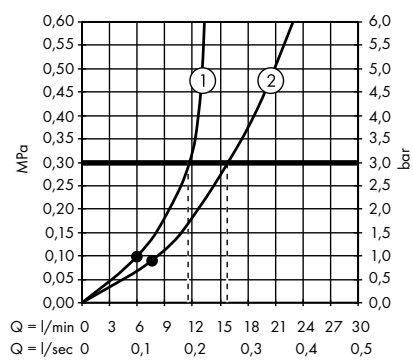

1. Overhead shower
2. Hand shower

The consumption was measured in combination with the appropriate fittings (thermostat/mixer/in-wall valve) to reflect actual application in practice.

· **Vernis Shape** Showerpipe 230 1jet EcoSmart with thermostat
 # 26097000, 26097670

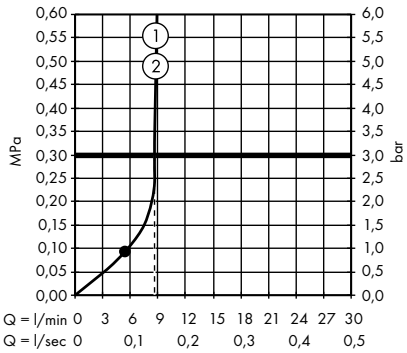

1. Overhead shower
2. Hand shower

· **Vernis Shape** Showerpipe 230 1jet Green with thermostat
 # 26319000

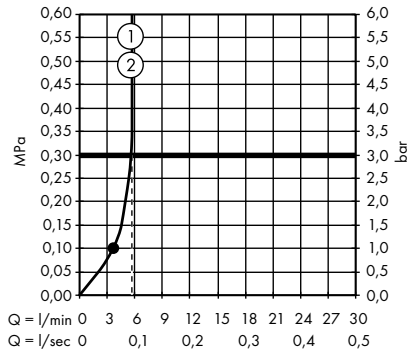

1. Overhead shower
2. Hand shower

· **Vernis Shape** Showerpipe 230 1jet with bath thermostat
 # 26284000

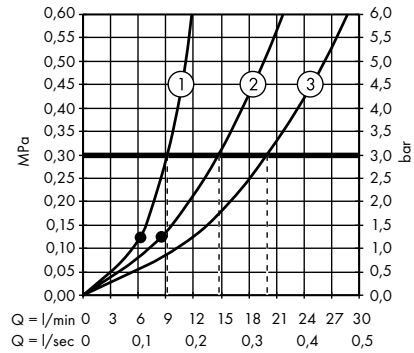

1. Overhead shower
2. Hand shower
3. Bath spout

· **Vernis Shape** Showerpipe 230 1jet EcoSmart with bath thermostat
 # 26098000

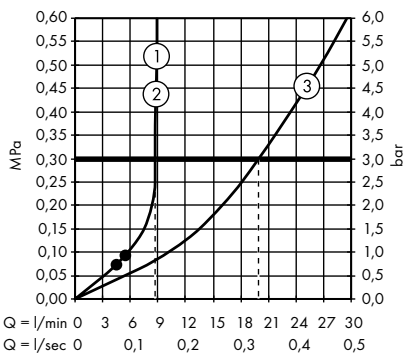

1. Overhead shower
2. Hand shower
3. Bath spout

· **Vernis Shape** Showerpipe 230 1jet Reno
 # 26282000, 26282670

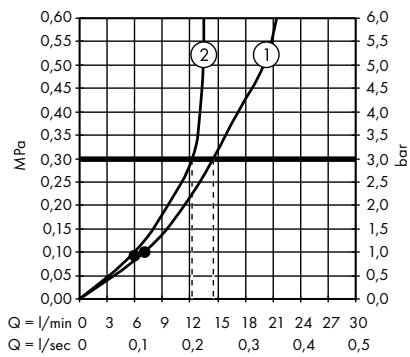

1. Hand shower
2. Overhead shower

· **Vernis Shape** Showerpipe 230 1jet Reno EcoSmart
 # 26289000, 26289670

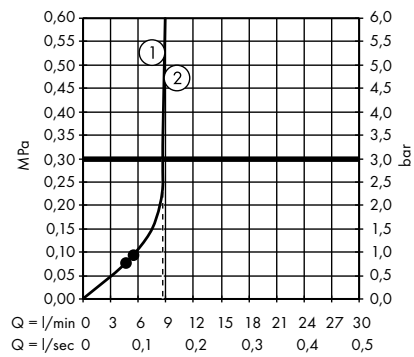

1. Overhead shower
2. Hand shower

· **Raindance** Shower panel Lift 180 2jet for exposed installation
 # 27008000, 27008400

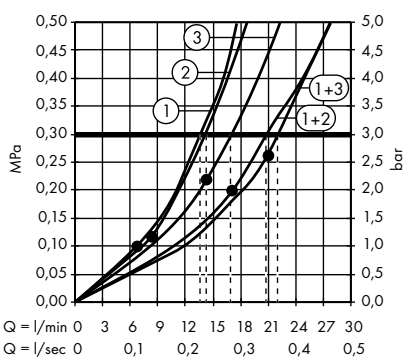

1. Hand shower
2. Rain
3. Rainflow

hansgrohe

hansgrohe
pro.hansgrohe-int.com

hansgrohe ComfortZone test
pro.hansgrohe-int.com/comfortzone-test

Spare parts shop
spares.hansgrohe.com

Planning-Data
pro.hansgrohe-int.com/planning-data

Find out more about the hansgrohe world at **pro.hansgrohe-int.com**

Find hansgrohe online and on social media.

hansgrohe Price Book 2022 assortment bath and kitchen EX en-EN · Subject to change in the interest of technical advancement
Form No. 841211092 · 01/22/4.5 · Printed in Germany
4 059625 409923

All products subject to availability. Availability may be temporarily affected by material shortages, supply chain disruption or other force majeure events.
Please contact us for details.

Hansgrohe SE · P.O. Box 1145 · 77757 Schiltach/Germany
Tel. +49 7836 51-0 · Fax +49 7836 51-1300 · info@hansgrohe.com · www.hansgrohe.com

FSC www.fsc.org
MIX
Paper from responsible sources
FSC® C011124